Westinghouse

ELECTRONIC TUBE DATA BOOK

DB-86A

YOU CAN BE SURE ... IF IT'S Westinghouse

COMMERCIAL ENGINEERING

WESTINGHOUSE ELECTRONIC TUBE DIVISION
Elmira **New York**

Westinghouse

ELECTRONIC TUBE
DATA BOOK

This book on the products of Westinghouse Electronic Tube Division has been prepared for the designer and the user of electronic equipment. It is arranged by general product classes, each of which can be located by its tabbed separator sheet. The looseleaf arrangement permits the addition of new and revised information.

Supplementary service for this book will be supplied to the recipient whose name and complete address appears in our records. If the book is transferred, the new owner should notify us of the change. Any communication regarding your book should include the binder serial number to be found on the inside back cover.

COMMERCIAL ENGINEERING

WESTINGHOUSE ELECTRONIC TUBE DIVISION
Post Office Box 284 Elmira, New York

Westinghouse

WESTINGHOUSE ELECTRIC CORP.
ELECTRONIC TUBE DIVISION
P. O. BOX 284, ELMIRA, NEW YORK

JANUARY, 1966

INDEX TO WESTINGHOUSE DATA BOOK FOR INDUSTRIAL & MILITARY TUBES & DEVICES

Your Westinghouse Electronic Tube Data Book contains all data pages and tabbed separator sheets listed here. Please notify us of omissions; they will be promptly forwarded to you.

Title Page
Sales Offices. . .Nov., 1965
Index . . . . . Jan., 1966

IGNITRONS (Sep.)
Ignitrons-General Information. . Oct. 20, 1955
Ignitron Thermostats . Dec. 15, 1960

WL-5550 . . . . July 15, 1965
WL-5551-A. . .Sept. 15, 1965
WL-5552-A. . . . July 1, 1965
WL-5553-B/655. . . . . July 1, 1955
WL-5554/679 . . . . . Dec. 15, 1955
WL-5555/653-B. . . . . Oct. 1, 1965
WL-5555A . . . .April 1, 1963
WL-5822-A. . . .June 1, 1965
WL-6228 . . . . May 15, 1962
WL-7171 . . . . May 15, 1960
WL-7669 . . . . Nov. 15, 1961
WL-7671 . . . . Nov. 15, 1961
WL-7673 . . . . April 1, 1965
WL-7681 . . . . .June 1, 1965
WL-7703 . . . . . Oct. 1, 1961
WL-7740 . . . . .June 1, 1960
WL-7998 . . . . .June 1, 1965
WL-8306 . . . . . July 1, 1962

THYRATRONS (Sep.)
WL-414 . . . . . May 15, 1956
KU-610 . . . . . .Aug. 1, 1961
WL-624. . . . . May 1, 1956
WL-632-B . . . .Dec. 1, 1962
WL-672-A . . . Sept. 1, 1961
WL-677. . . . . May 1, 1956
WL-678. . . . . Aug. 15, 1962
WL-5685/C6JA . . . . . May 1, 1956
WL-5796 . . . . . Jan. 2, 1958
WL-5877 . . . . . Jan. 1, 1958
WL-6860 . . . . Jan. 30, 1959
WL-7269 . . . . Aug. 15, 1962
WL-7297 . . . . Jan. 30, 1959
WL-7306A
WL-7556A . . . Aug. 15, 1965
WL-7307A
WL-7509A . . . Aug. 15, 1965
WL-7321 . . . . Nov. 14, 1958
WL-7363 . . . March 13, 1959
WL-7509A See WL-7307A
WL-7556A See WL-7306A
WL-8043 . . . . Dec. 15, 1961

GAS & VAPOR RECTIFIERS (Sep.)
WL-575A. . . .Sept. 15, 1959
WL-673. . . . . March 1, 1961
WL-857B . . . . .June 1, 1961
WL-869-B
WL-869-BL . . April 1, 1961
WL-872A/872 . . . . . May 15, 1961
WL-6894
WL-6895 . . . .April 15, 1965
WL-8008 . . . .April 15, 1963

HIGH VACUUM RECTIFIERS (Sep.)
WL-456. . . . . .Dec. 1, 1962
WL-481-B . . . .Dec. 1, 1955
WL-579-B . . . June 15, 1955
WL-5575 . . . .April 15, 1961
WL-5576 . . . .Sept. 15, 1962
WL-5859/5860. . . . . July 1, 1962
WL-5934 . . . . . May 1, 1954
WL-5973A . . .April 15, 1963
WL-8094/199 . . . . . March 1, 1963
WL-22800. . . .Sept. 15, 1964
WL-22801 . . . .Aug. 1, 1964
WL-22802 . . .Sept. 15, 1964

HIGH VACUUM AMPLIFIERS (Sep.)
Quick Reference Guide (86-599) . .Aug., 1965
WL-2E26
WL-6893 . . . . Aug. 15, 1960
WL-813. . . . . Oct. 20, 1955
WL-891. . . . . July 1, 1955
WL-891-R. . . . . July 1, 1955
WL-892. . . . . July 1, 1955
WL-892-R. . . . . July 1, 1955
WL-895. . . . . .Nov. 1, 1955
WL-895-R. . . . .Nov. 1, 1955
WL-5604 . . . . .June 1, 1961
WL-5606 . . . . May 15, 1961
WL-5619 . . . . Aug. 1, 1961
WL-5668 . . . . Jan. 15, 1960
WL-5669 . . . . . **July 1, 1961**
WL-5682 . . . . . Oct. 1, 1964
WL-5736 . . . . Feb. 15, 1960
WL-5891 . . . . June 25, 1958
WL-5918A . . . .Aug. 1, 1961
WL-5936 . . . . June 15, 1961
WL-5986A . . . April 1, 1965
WL-6146
WL-6159
WL-6883 . . . . .Feb. 3, 1958
WL-6293 . . . March 15, 1961
WL-6379 . . . March 16, 1959
WL-6420
WL-6421
WL-6421F . . . .April 1, 1965
WL-6422
WL-6423
WL-6423F . . . .Dec. 1, 1964
WL-6424
WL-6425
WL-6425F . . . May 15, 1965
WL-6426 . . . . .April 1, 1964
WL-6567 . . . . Aug. 15, 1965
WL-6623 . . . . Feb. 15, 1960
WL-6696
WL-6697 . . . March 15, 1965
WL-6883 (See WL-6146)
WL-6893 (See WL-2E26)
WL-6920 . . . March 15, 1961
WL-7120
WL-7121 . . . . May 15, 1965
WL-7215
WL-7255
WL-22759
WL-22789 . . . . May 1, 1965
WL-7328A . . . March 1, 1961
HCC7328A . . Aug. 15, 1961
WL-7413 . . . . Feb. 15, 1961
WL-7463 . . . . Dec. 15, 1959
WL-7464 . . . .Sept. 15, 1959
WL-7540 . . . March 15, 1960
WL-7560 . . . . Nov. 15, 1964
WL-7565 . . . . July 15, 1961
WL-7604 . . . . .Jan. 1, 1961
WL-7685 . . . . .Oct. 1, 1960
WL-7691 . . . .Sept. 15, 1960
WL-7748 . . . .April 15, 1965
WL-7750 . . . . April 1, 1961
WL-7982 . . . . .Aug. 1, 1961
WL-8032
WL-8298 . . . . Aug. 15, 1962
WL-8044 . . . . June 15, 1961
WL-8045 . . . .April 15, 1965
WL-8298 See WL-8032
WL-22759 See WL-7215
WL-22789 See WL-7215
WL-22862 . . . March 1, 1965
WL-23053 . . . .Feb. 1, 1965

MILITARY & INDUSTRIAL CATHODE RAY TUBES (Sep.)
3JP-A. . . . . Jan. 1, 1965
5AMP . . . . . .April 15, 1962
5CEP-. . . . . Aug. 15, 1963
5DEP-. . . . . .Feb. 1, 1965
5FP7A
5FP7B
5FP11
5FP11A
5FP14
5FP14A . . . . . Jan. 1, 1961
5UP-. . . . . Jan. 1, 1965
5ZP . . . . . July 1, 1965
7ABP4
7ABP7
7ABP14
7ABP25 . . . . Aug. 15, 1960
7AUP . . . . . .June 1, 1965
7BP7A
7BP7B . . . . .Sept. 15, 1960
7MP7 . . . . . .Sept. 15, 1965
7TP4 . . . . . June 15, 1960
7VP . . . . . July 1, 1965
10AMP7 . . . . Jan. 15, 1961
10KP-
10KP-A
10KP-B . . . . April 1, 1964
10SP4. . . . . .Nov. 1, 1965
10UP14A. . . . .Jan. 1, 1961

10WP–
10WP–A . . . . .Dec. 1, 1964

12ABP7A . . .April 15, 1962
12SP7D. . . . . Jan. 15, 1961
14AZP4 . . . . .Oct. 1, 1961
16AKP7 . . . .April 15, 1963
21EWP . . . . . Oct. 15, 1963

CAMERA & STORAGE TUBES (Sep.)
Slow-Scan Vidicons
(ET-1480). . . . May 1, 1965
WL-7268 . . . . .Sept. 1, 1960
WL-7356 . . . . .Oct. 1, 1960
WL-7383 . . . . Dec. 15, 1960
WL-22662 . . . May 15, 1964
WL-23111 . . March 15, 1965

NEUTRON & RADIATION DETECTORS (Sep.)
Neutron Detectors
from
Westinghouse
(Form ET-1436)

WL-6307 . . . . March 1, 1960
WL-6376
WL-6376-A. . March 15, 1960
WL-6377 . . . . . May 1, 1960
WL-6937
WL-6937A . . . .April 1, 1960
WL-6938 . . . . March 1, 1960
WL-6941
WL-6941A . . March 15, 1960

WL-6971
WL-6971A . . March 15, 1960
WL-6998 . . . . March 1, 1960
WL-7087
WL-7087A . . . .Sept. 1, 1962
WL-7186 . . . . May 15, 1961
WL-7187 . . . March 15, 1960
WL-7188 . . . . .April 1, 1960
WL-7243 . . . . March 1, 1960

WL-7317 . . . . March 1, 1960
WL-7353 . . . . . May 1, 1960
WL-7429
WL-7429A . . . .Nov. 1, 1961
WL-7606 . . . . .April 1, 1960
WL-7657 . . . . .Nov. 1, 1964

WL-7741 . . . . .Oct. 1, 1961
WL-8073 . . . . June 15, 1965
WL-8074 . . . . . Jan. 1, 1962

WL-8075 . . . . .Nov. 1, 1964
WL-8105 . . . . June 15, 1965
WL-8137 . . . . June 15, 1965
WL-8214 . . . . June 15, 1965
WL-22716
WL-22716A . . .Feb. 1, 1963
WL-22717
WL-22717A . . .Feb. 1, 1963

WL-22718
WL-22718A . . .Feb. 1, 1963
WL-22719
WL-22719A . . .Feb. 1, 1963
WL-22791 . . . .Dec. 1, 1963
WL-22792 . . . Dec. 15, 1963
WL-22793 . . . Dec. 15, 1963
WL-23033 . . . Aug. 15, 1964

WL-23055 . . . Aug. 15, 1965
WL-23057. . . . Oct. 15, 1965
WL-23058. . . . Oct. 15, 1965
WL-23064 . . . Oct. 15, 1965
WL-23065 . . . Oct. 15, 1965
WL-23068 . . . . Oct. 1, 1965
WL-23069 . . . Oct. 15, 1965
WL-23070 . . .Sept. 15, 1965

WL-23071 . . . .Sept. 1, 1965
WL-23072 . . . July 15, 1965
WL-23073 . . . Sept. 1, 1965
WL-23074 . . . Aug. 15, 1965
WL-23075 . . . . Oct. 1, 1965
WL-23076 . . . Nov. 15, 1965
WL-23077 . . . .Dec. 1, 1965
WL-23078
WL-23078A . . Oct. 15, 1965

WL-23079 . . . . Oct. 1, 1965
WL-23082
WL-23082A . . Oct. 15, 1965
WL-23084 . . . . Oct. 1, 1965
WL-23085 . . . . Oct. 1, 1965
WL-23088 . . . Sept. 1, 1965
WL-23092 . . . July 15, 1965
WL-23149 . . . .Dec. 1, 1965

WL-23150 . . . .Nov. 1, 1965
WL-23151 . . . Oct. 15, 1965

WL-23152 . . . Oct. 15, 1965
WL-23153 . . . .Dec. 1, 1965
WL-23155 . . . .Dec. 1, 1965

MICROWAVE DEVICES (Sep.)
WL-1B41
WL-1B45
WL-1B49 . . . . March 1, 1954
WL-1Q22
WL-1Q23
WL-1Q24
WL-1Q25
WL-5846
WL-6040
WL-6041 . . . . . May 1, 1955

WL-103
WL-142
WL-143. . . . . Aug. 15, 1964
WL-107. . . . . .Aug. 1, 1963
WL-108. . . . .April 15, 1964
WL-111. . . . . .Aug. 1, 1963
WL-113. . . . . .Aug. 1, 1963
WL-114. . . . . .Aug. 1, 1963
WL-117. . . . . .June 1, 1964
WL-118. . . . . .Aug. 1, 1963
WL-119. . . . March 15, 1965

WL-121. . . . . July 1, 1963
WL-122. . . . .April 15, 1963
WL-124. . . . .April 15, 1964
WL-126. . . . . July 15, 1963
WL-128. . . . . July 15, 1963
WL-135. . . . . .April 1, 1964
WL-141. . . . . .Aug. 1, 1964
WL-142 (See WL-103)
WL-143 (See WL-103)
WL-146. . . . .Nov. 15, 1964
WL-147. . . . .Nov. 15, 1964

WL-148. . . . .Nov. 15, 1964
WL-149. . . . . Aug. 15, 1964
WL-167. . . . .April 15, 1963
WL-177. . . . . .June 1, 1963
WL-186. . . . March 15, 1965
WL-187. . . . March 15, 1965
WL-193. . . . March 15, 1962
WL-6177 . . . . Dec. 23, 1957
WL-6249B . . . June 15, 1960
WL-6310 . . . . Feb. 15, 1962
WL-6312 . . . . Feb. 15, 1962

WL-6314 . . . . April 1, 1962

WL-6315 . . . . Feb. 15, 1962
WL-6316 . . . March 15, 1962
WL-6780 . . . March 15, 1962
WL-6781 . . . . .June 1, 1962
WL-6865A . . . Dec. 15, 1961
WL-6915 . . . March 15, 1962
WL-7008 . . . . Aug. 15, 1962

WL-7008 & WL-7111
Rieke Curves . Jan. 1, 1961
WL-7111 . . . . Aug. 15, 1962
WL-7541 . . . . Aug. 15, 1961
WL-7794 . . . . May 15, 1962
WL-7795 . . . . May 15, 1962
WL-7796 . . . . . Jan. 1, 1961

VACUUM GAUGE (Sep.)
WL-762
WL-765A. . . . March 1, 1961
WL-5966 . . . . Sept. 1, 1965
WL-7676 . . . . .Feb. 1, 1965
WL-7903 . . . . .Feb. 1, 1962
WL-7904 . . . . March 1, 1961

WL-8057 . . . .Sept. 15, 1964
WL-22619. . . .April 15, 1962
WL-22627 . . . . May 1, 1962
WL-22643 . . . .April 1, 1962
WL-22754 . . .April 15, 1964

HOLLOW CATHODE DISCHARGE DEVICES (Sep.)
Quick Reference Guide
Form 86-754. . . .Aug., 1965
WL-22602 . . . May 15, 1962
WL-22603 . . . May 15, 1962
WL-22604 . . . May 15, 1962
WL-22605 . . . May 15, 1962

WL-22606 . . . June 15, 1962
WL-22607 . . . June 15, 1962
WL-22608 . . . May 15, 1962
WL-22609 . . . June 15, 1962
WL-22610 . . . June 15, 1962
WL-22611 . . . June 15, 1962

SPECIAL DEVICES (Sep.)
KX-642. . . . . June 15, 1961
WL-759. . . . . Jan. 1, 1962

SALES OFFICES FOR ELECTRONIC COMPONENTS AND SPECIALTY PRODUCTS

STATE & CITY		ADDRESS	PHONE
ALABAMA			
Huntsville	35801	89 Holiday Office Center	(205) 881-2591
ARIZONA			
Phoenix	85005	1102 N. 21st Street, Box 6144	(602) 254-5231
CALIFORNIA			
Compton	90224	18020 S. Santa Fe Avenue	(213) 636-0111
Los Angeles	90017	600 St. Paul Avenue	(213) 482-9660
Sunnyvale	94088	Bldg. 73, Hendy Avenue	(408) 735-2191
COLORADO			
Denver	80204	55 W. Fifth Avenue	(303) 534-8121
CONNECTICUT			
Hartford	06103	360 Market Street	(203) 249-5792
DISTRICT OF COLUMBIA			
Washington	20006	1625 K Street, N. W.	(202) 628-8843
FLORIDA			
Orlando	32800	367 N. Orange Avenue	(305) 425-4511
GEORGIA			
Atlanta	30302	1299 Northside Drive, N. W.	(404) 874-1641
ILLINOIS			
Chicago	60606	10 South Riverside Plaza	(312) 461-7200
INDIANA			
Indianapolis	46207	1560 Stadium Drive	(317) 632-3301
MARYLAND			
Towson	21204	1055 Taylor Avenue	(301) 828-5400
MASSACHUSETTS			
Boston	02199	800 Boylston Street	(617) 542-0600
MICHIGAN			
Detroit	48232	5757 Trumbull Avenue	(313) 872-7010
MINNESOTA			
Minneapolis	55416	3501 S. Highway 100	(612) 927-6551
MISSOURI			
St. Louis	63101	411 N. Seventh Street	(314) 421-6911
NEW JERSEY			
E. Orange	07018	67 Evergreen Place	(201) 621-9000
Red Bank	07701	43 W. Front Street	(201) 747-5800
NEW YORK			
Johnson City	13850	4301 Old Vestal Road, Box 148	(607) 729-2258
Mineola	11501	1501 Franklin Avenue	(516) 248-9800
Rochester	14603	711 Exchange Street	(716) 232-4380
OHIO			
Cleveland	44113	Illuminating Bldg., 55 Public Square	(216) 241-7600
Dayton	45404	1306 Farr Drive	(513) 461-3720
PENNSYLVANIA			
Philadelphia	19104	3001 Walnut Street	(215) 382-1200
Pittsburgh	15222	306 Fourth Avenue	(412) 391-2800
TEXAS			
Dallas	75247	8400 John W. Carpenter Freeway	(214) 631-2811
Houston	77002	507 Dallas Avenue	(713) 224-7791
WASHINGTON			
Seattle	98134	3451 Marginal Way	(206) 622-0808
WISCONSIN			
Milwaukee	53201	538 N. Broadway Avenue	(414) 276-1800

WESTINGHOUSE ELECTRIC CORPORATION
ELECTRONIC TUBE DIVISION
P. O. BOX 284
ELMIRA, N.Y.

PRINTED IN U.S.A.

ET-1547/11-65

Westinghouse®

INDUSTRIAL TUBE ACCESSORIES

April 1, 1966

TUBE TYPE	WATER JACKET	AIR DISTRIBUTOR	SUPPORT PLATE	SUPPORT CLAMP	INSULATING SUPPORT	FILAMENT CONN-(Sm)	FILAMENT CONN-(Lg)	GRID CONNECTOR
WL-207	WL-22675	–	–	–	–	–	–	WL-22677
WL-466R	–	WL-22709	–	–	WL-22710	WL-22699	WL-22701	WL-22708
WL-891	WL-22675	–	–	–	–	WL-22677	–	WL-22677
WL-891R	–	–	–	–	WL-22678	WL-22677	–	WL-22677
WL-892	WL-22675	–	–	–	–	WL-22677	–	WL-22677
WL-892R	–	–	–	–	WL-22678	WL-22677	–	WL-22677
WL-895	WL-22680	–	WL-23166	WL-23101	–	WL-22677	–	WL-22677
WL-4852	–	–	–	–	–	WL-23107	–	WL-22689
WL-5604	–	–	–	–	WL-22678	WL-22677	–	WL-22677
WL-5606	WL-22675	–	–	–	–	WL-22677	–	WL-22677
WL-5619	WL-22696	–	WL-23098	WL-23097	–	WL-22677	–	WL-22677
WL-5668	WL-23163	–	WL-23098	WL-23097	–	WL-22677	–	WL-22677
WL-5669	–	–	–	–	WL-22678	WL-22677	–	WL-22677
WL-5682	WL-23004 [a]	WL-23002 [b]	WL-23003 [c]	WL-23001 [d]	–	WL-22999	WL-23000	WL-23001
WL-5891	–	–	–	–	WL-23099	WL-22677	WL-22682	WL-22677
WL-5918A	WL-22680	–	WL-23166	WL-23101	–	WL-22677	–	WL-22677
WL-5936	WL-22680	–	WL-23166	WL-23101	–	WL-22677	–	WL-22677
WL-5986A	WL-22680	–	WL-23166	WL-23101	–	–	–	WL-22677
WL-6379	WL-22680	–	WL-23166	WL-23101	–	WL-22677	–	WL-22677
WL-6420	WL-23103	–	WL-23098	WL-23097	–	WL-22700	WL-22699	WL-22701
WL-6421	–	WL-22783	–	–	WL-23104	WL-22700	WL-22699	WL-22701
WL-6421F	–	–	–	–	WL-22678	WL-22700	WL-22699	WL-22701
WL-6422	WL-22696	–	WL-23098	WL-23097	–	WL-22700	WL-22699	WL-22701
WL-6423	–	WL-22784,5	–	–	WL-23104	WL-22700	WL-22699	WL-22701
WL-6423F	–	–	–	–	WL-22678	WL-22700	WL-22699	WL-22701
WL-6424	WL-22696	–	WL-23098	WL-23097	–	WL-22700	WL-22699	WL-22701
WL-6425	–	WL-22784,5	–	–	WL-23104	WL-22700	WL-22699	WL-22701
WL-6425F	–	–	–	–	WL-22678	WL-22700	WL-22699	WL-22701
WL-6426	WL-22698	–	WL-22704	WL-22703	–	WL-22700	WL-22699	WL-22701
WL-6427	–	WL-22786	–	–	WL-22710	WL-22700	WL-22699	WL-22701
WL-6567	–	–	–	–	–	WL-22705	WL-22706	WL-22686
WL-6623	–	–	–	–	WL-22866	–	–	–
WL-6696	WL-22707	–	WL-22704	WL-22703	–	WL-22699	WL-22701	WL-22708
WL-6697	–	WL-22709	–	–	WL-22710	WL-22699	WL-22701	WL-22708
WL-6920	–	–	–	–	WL-22753	WL-22677	–	WL-22677
WL-7120	WL-23103	–	WL-23098	WL-23097	–	WL-22700	WL-22699	WL-22701
WL-7121	–	WL-22783	–	–	WL-23104	WL-22700	WL-22699	WL-22701
WL-7328A	–	–	–	–	WL-23105	WL-22677	WL-22682	WL-22677
WL-7413	WL-22680	–	WL-23166	WL-23101	–	WL-22677	WL-22682	WL-22677
WL-7463	–	–	–	–	WL-22678	WL-22705	WL-22706	WL-22686
WL-7540	–	–	–	–	–	WL-22682	–	WL-22677
WL-7560	–	–	–	–	–	WL-22797	WL-22798	WL-22799
WL-7560V	–	–	–	–	–	WL-22797	WL-22798	WL-22799
WL-7565	–	–	–	–	WL-22866	–	–	–
WL-7604	–	–	–	–	WL-22736	–	–	–
WL-7685	–	–	–	–	WL-22736	–	–	–
WL-7691	–	–	–	–	WL-22753	WL-22677	WL-22682	WL-22677
WL-7748	–	–	–	–	–	WL-22677	WL-22682	WL-22677
WL-7750	–	–	–	–	WL-22753	WL-22677	WL-22682	WL-22677
WL-7982	–	–	–	–	–	WL-22677	WL-22682	WL-22677
WL-8045	WL-22680	–	WL-23166	WL-23101	–	WL-22677	–	WL-22677
WL-8461	WL-22688	–	–	–	–	WL-22677	WL-22682	WL-22689
WL-22803	WL-22688	–	–	–	–	WL-22677	WL-22682	WL-22689
WL-22862	WL-22680	–	WL-23166	WL-23101	–	–	–	WL-22677
WL-23063	–	–	–	–	–	WL-23107	–	WL-22689
WL-23083	WL-23004 [a]	WL-23002 [b]	WL-23003 [c]	WL-23001 [d]	–	WL-22999	WL-23000	WL-23001

NOTES

a WL-23004 is Mounting Socket
b WL-23002 is Protective Gap
c WL-23003 is Protective Gap
d WL-23001 is Anode Connector

Westinghouse®

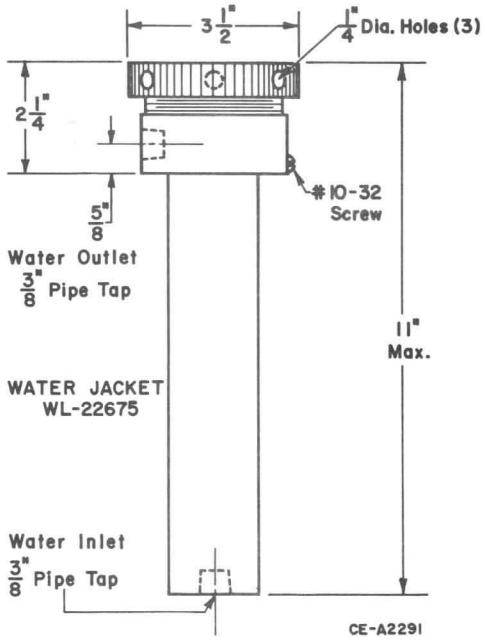

CE-A2291

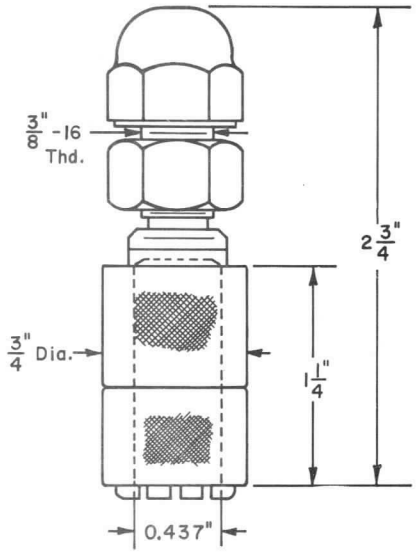

CONNECTOR
WL-22677

CE-A2293

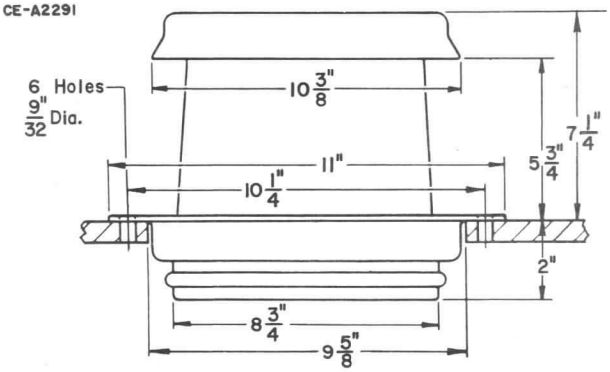

INSULATING SUPPORT
WL-22678

CE-A2294

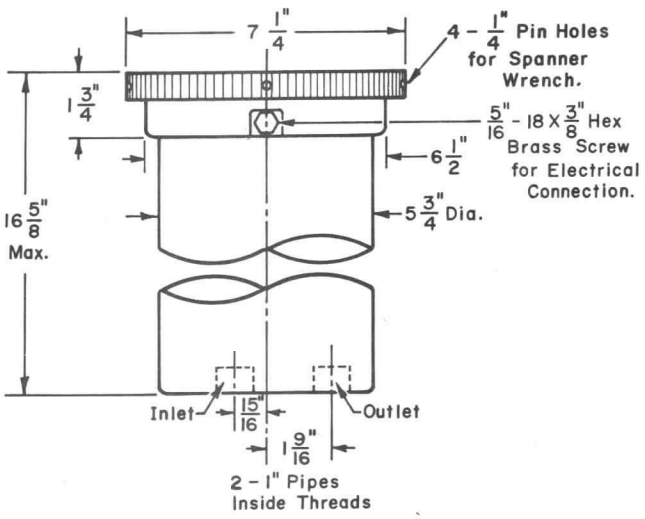

WATER JACKET
WL-22680

CE-A2295

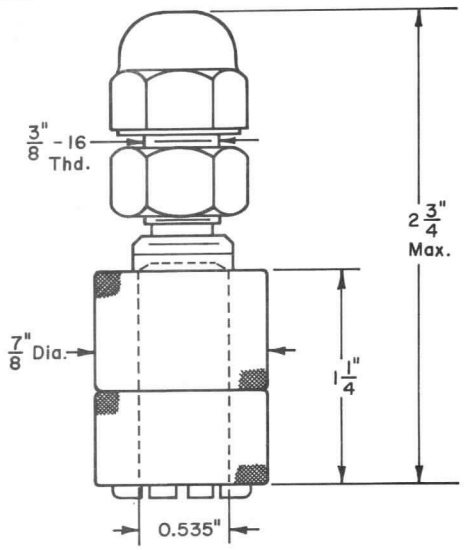

CONNECTOR
WL-22682

CE-A2296

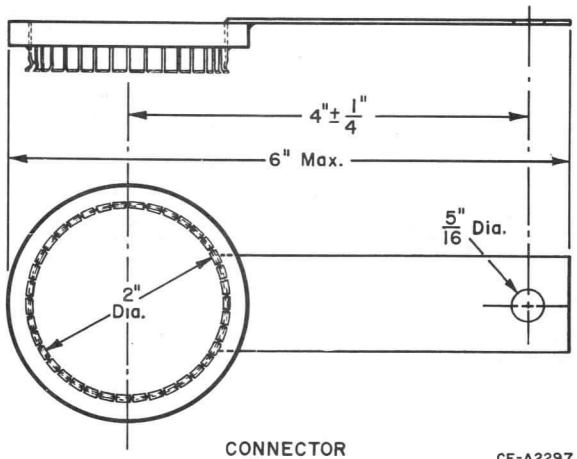

CONNECTOR
WL-22686

CE-A2297

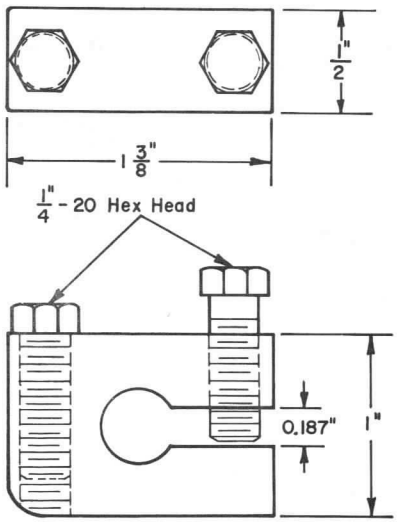

CONNECTOR
WL-22689

CE-A2299

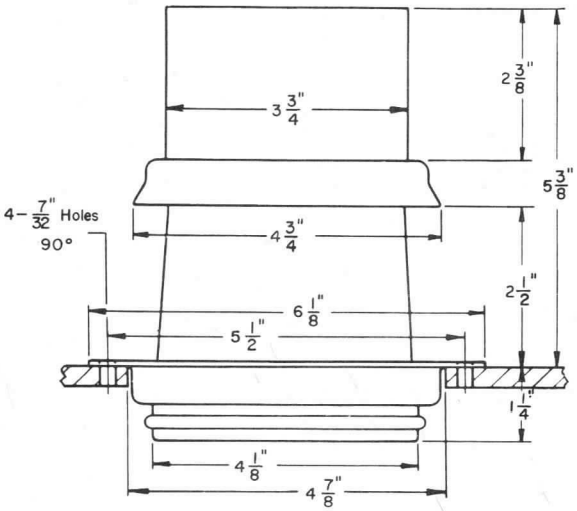

INSULATING SUPPORT
WL-22697

CE-A2301

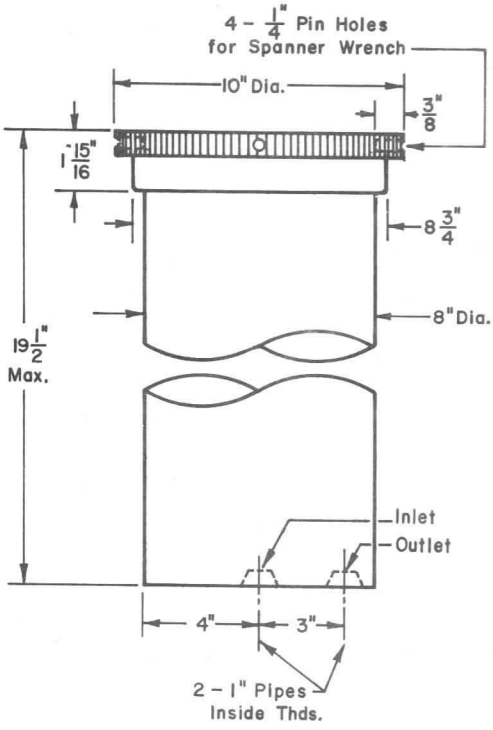

WATER JACKET
WL-22688

CE-A2298

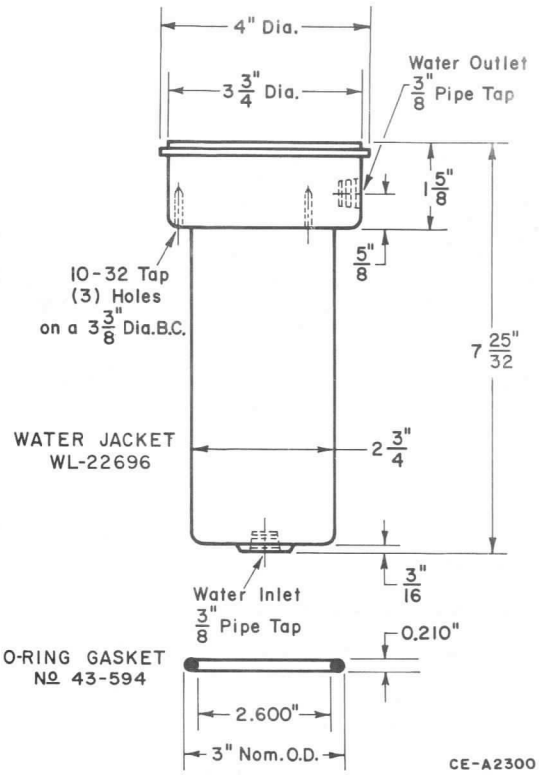

CE-A2300

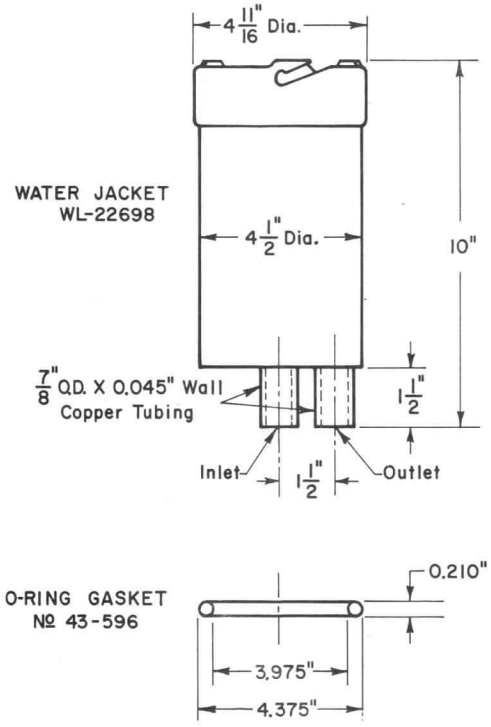

CE-A2302

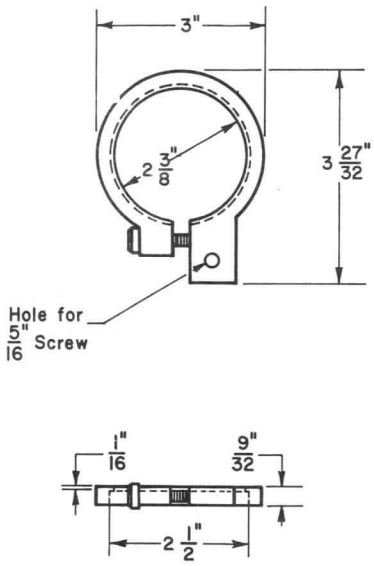

CONNECTOR
WL-22699

CE-A2303

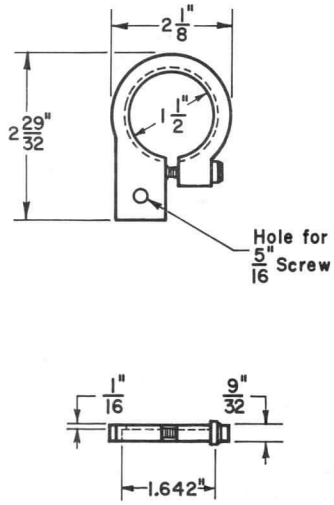

CONNECTOR
WL-22700

CE-A2304

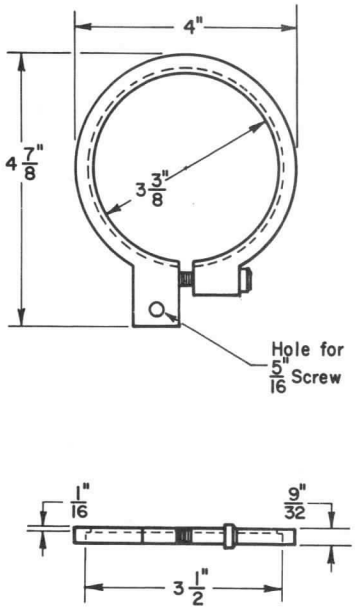

CONNECTOR
WL-22701

CE-A2305

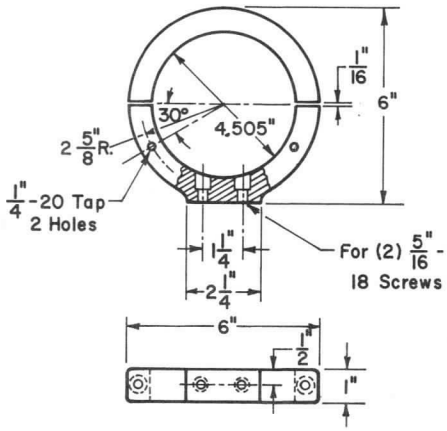

MOUNTING CLAMP
WL-22703

CE-A2306

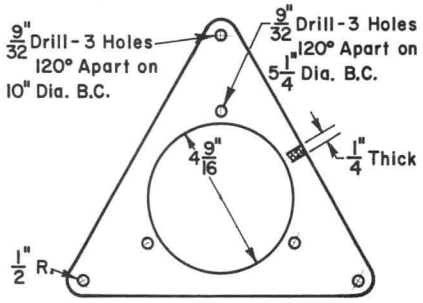

MOUNTING PLATE
WL-22704

CE-A2307

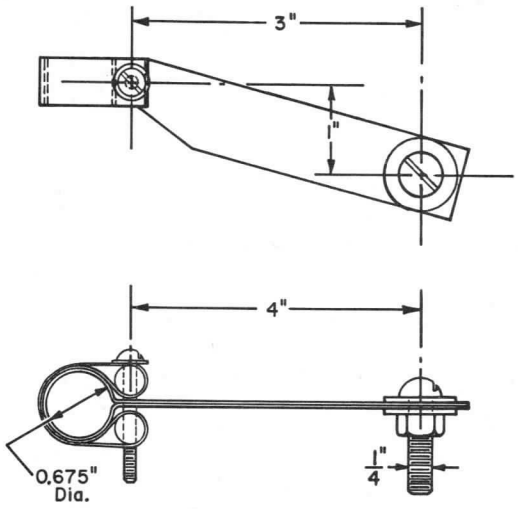

CE-A2308

CONNECTOR
WL-22705

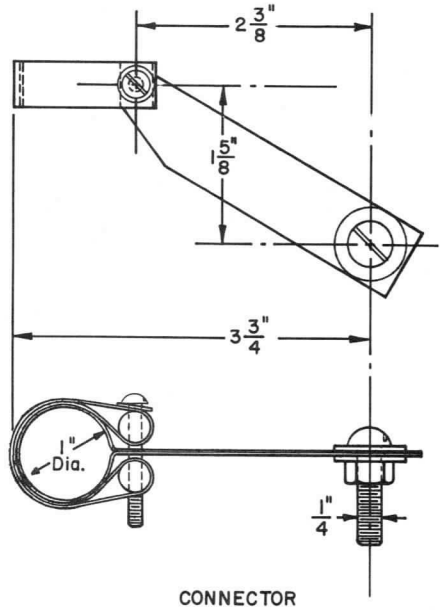

CONNECTOR
WL-22706

CE-A2309

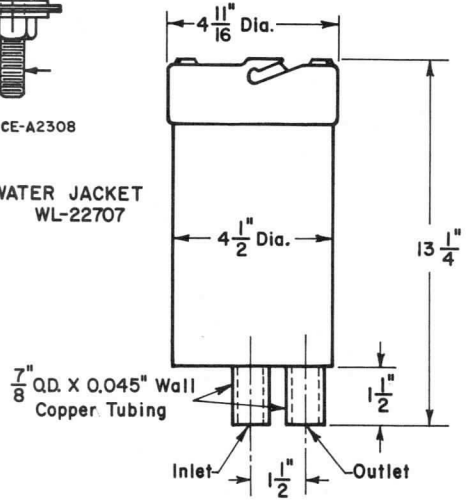

WATER JACKET
WL-22707

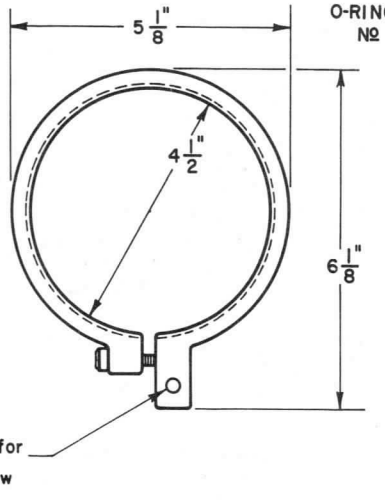

O-RING GASKET
№ 43-596

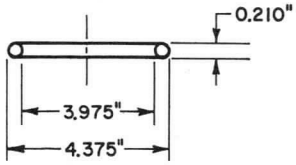

CE-A2310

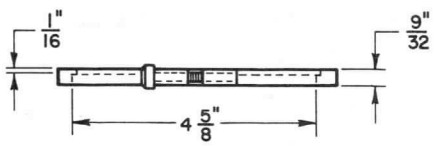

GRID CONNECTOR
WL-22708

CE-A2311

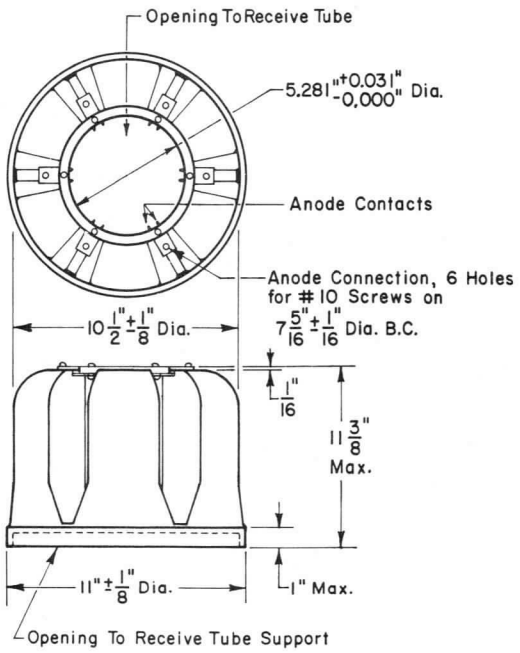

AIR DISTRIBUTOR
WL-22709

CE-A2312

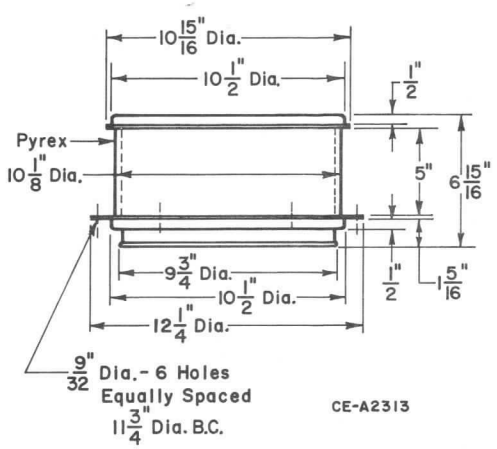

TUBE SUPPORT
WL-22710

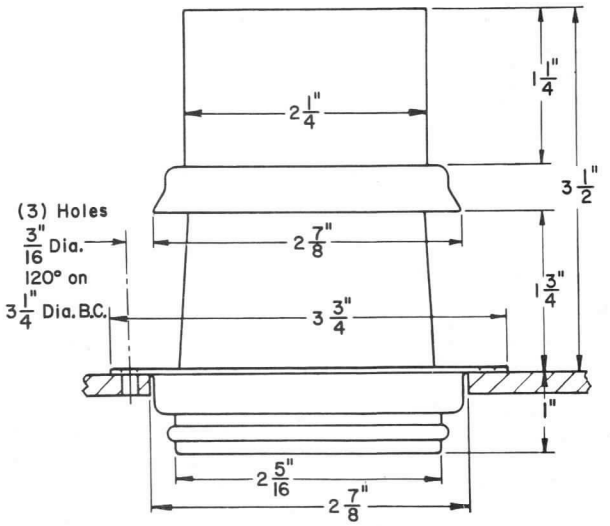

INSULATING SUPPORT
WL-22736
CE-A2315

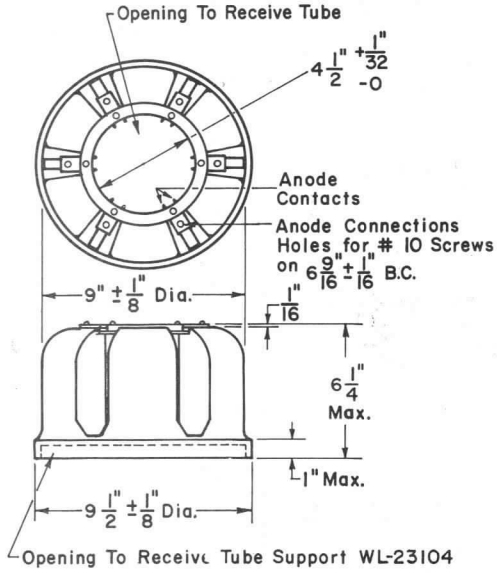

AIR DISTRIBUTOR WL-22783

CE-A2317

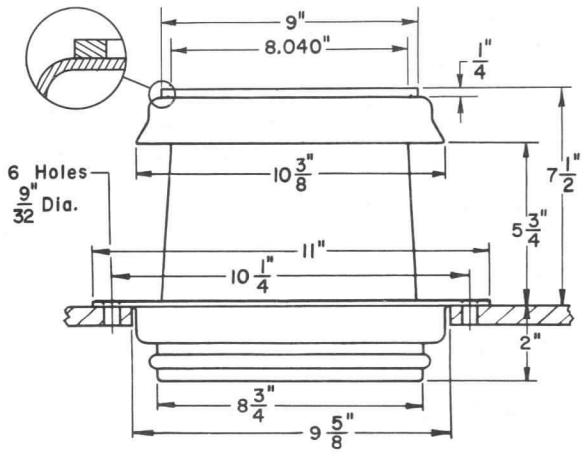

INSULATING SUPPORT
WL 22753

CE-A2316

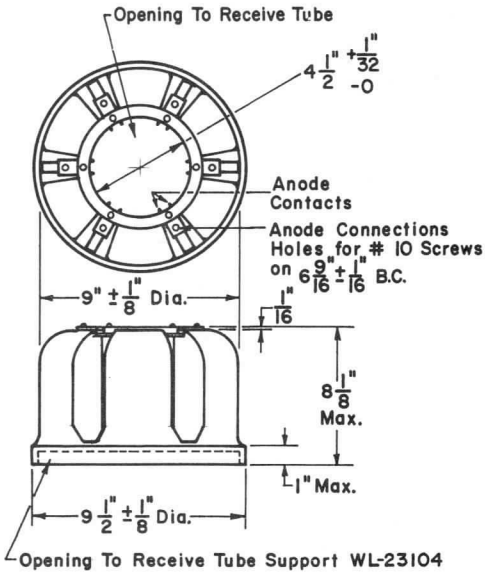

AIR DISTRIBUTOR
(Aluminum - WL-22784)
(FIBER GLASS - WL-22785)

CE-A2318

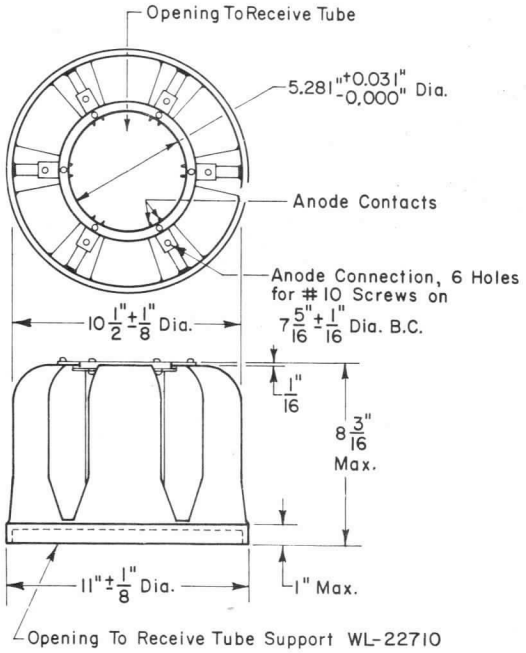

AIR DISTRIBUTOR
WL-22786 CE-A2320

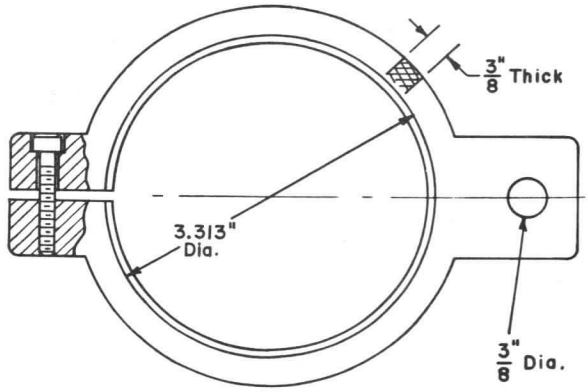

CONNECTOR
WL-22797 CE-A2321

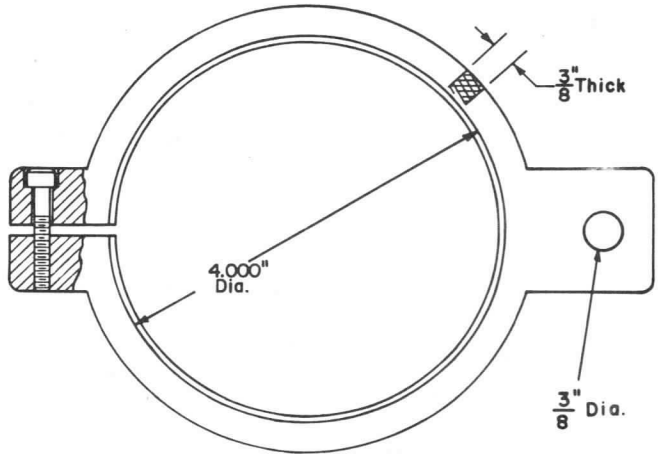

CONNECTOR
WL-22798 CE-A2322

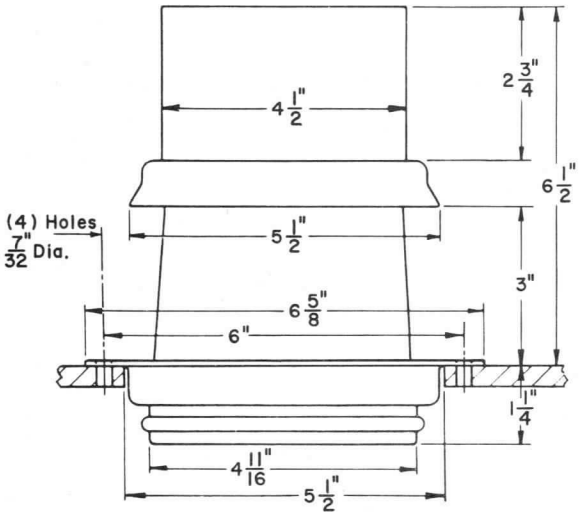

INSULATING SUPPORT
WL-22866 CE-A2324

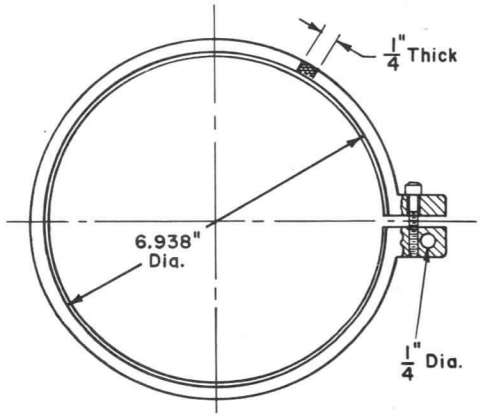

CONNECTOR
WL-22799 CE-A2323

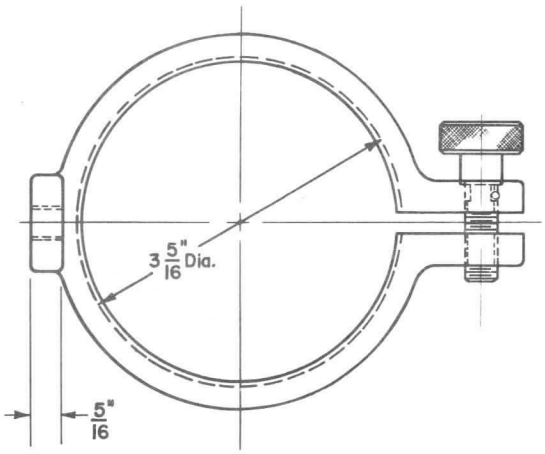

CONNECTOR
WL-22999

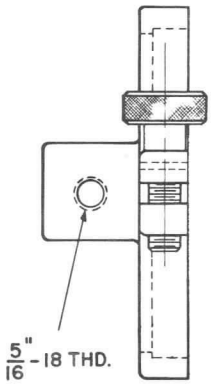

CE-A2325

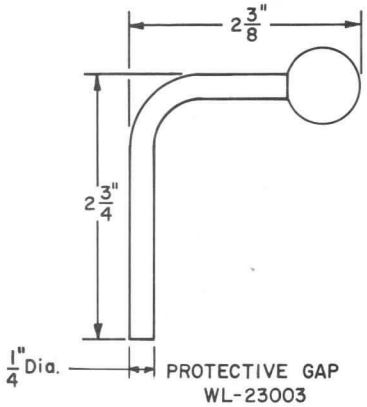

CE-A2329

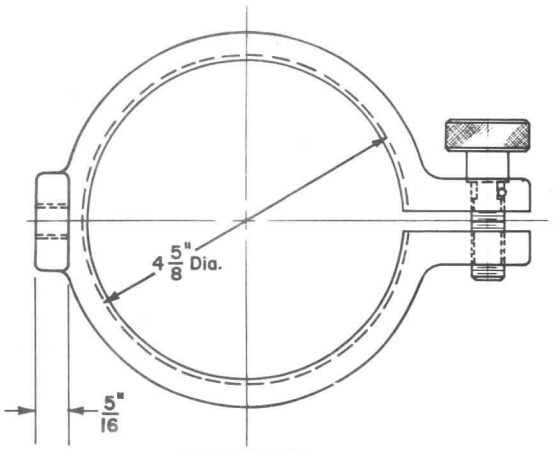

CONNECTOR
WL-23000

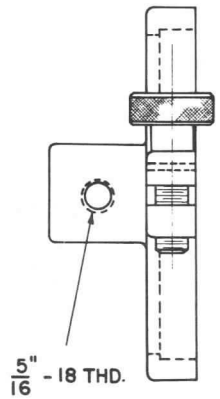

CE-A2326

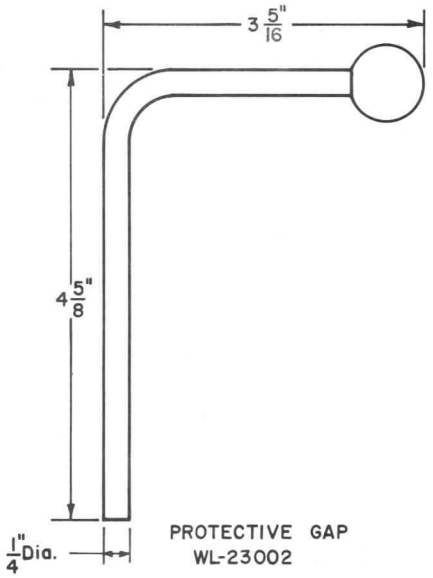

CE-A2328

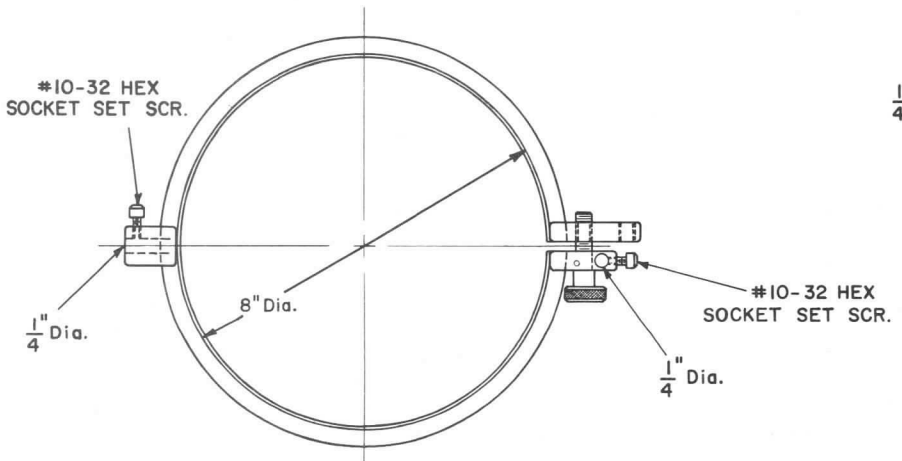

CONNECTOR
WL-23001

CE-A2327

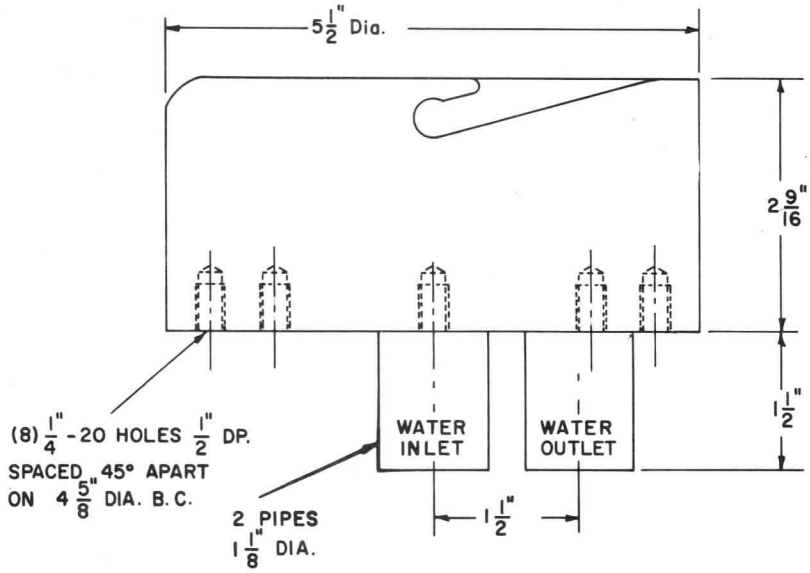

MOUNTING SOCKET
WL-23004

CE-A2330

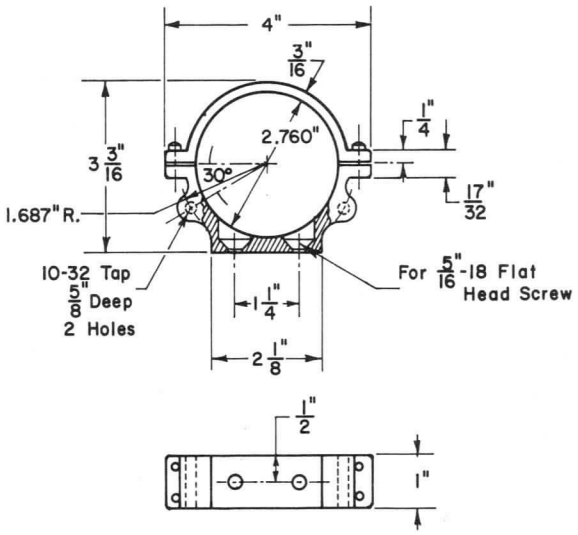

MOUNTING CLAMP
WL-23097

CE-A2332

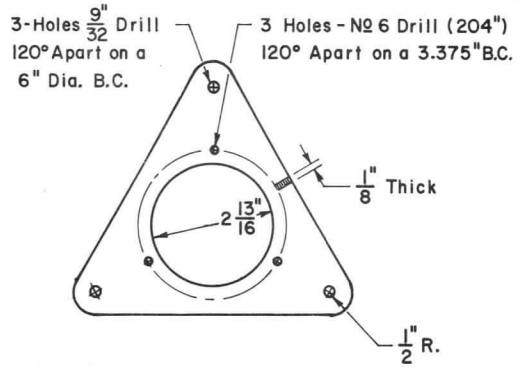

MOUNTING PLATE
WL-23098

CE-A2333

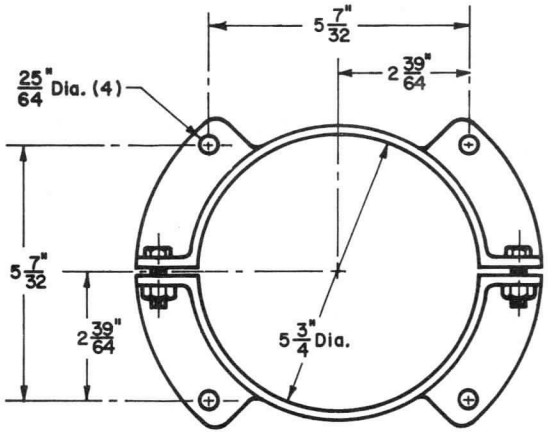

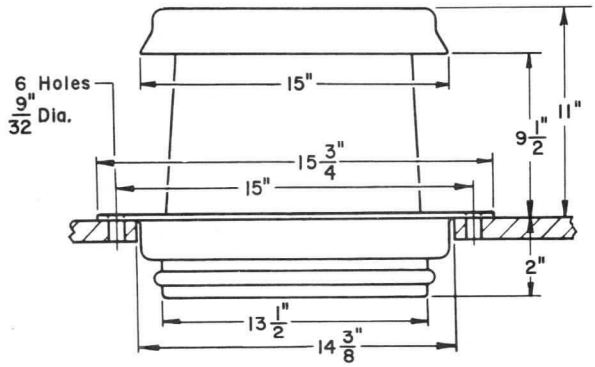

INSULATING SUPPORT
WL-23099

CE-A2334

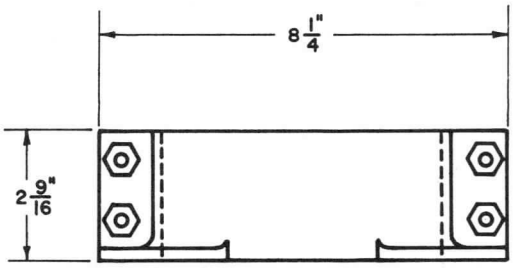

JACKET CLAMP
WL-23101

CE-A2335

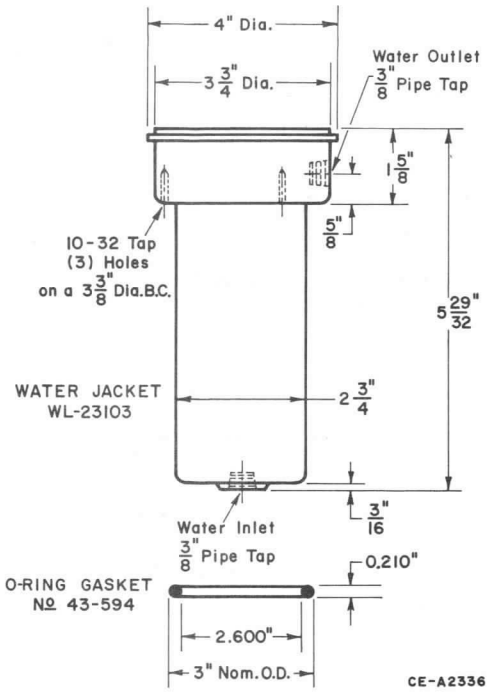

CE-A2336

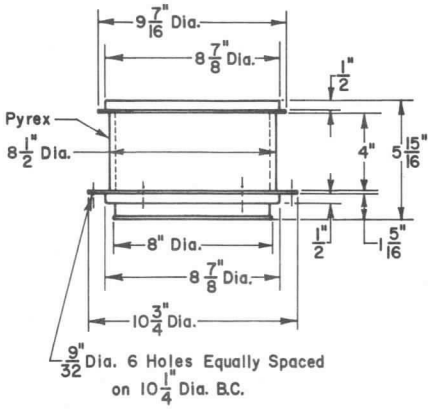

TUBE SUPPORT
WL-23104

CE-A2337

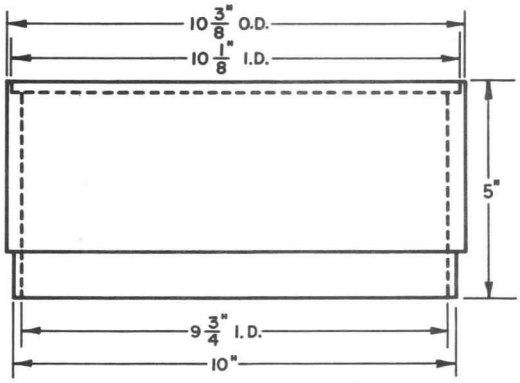

INSULATING SUPPORT
WL-23105

CE-A2338

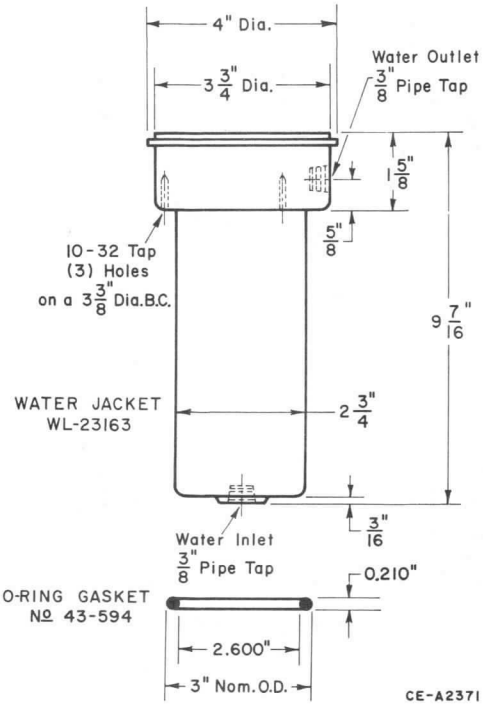

CE-A2371

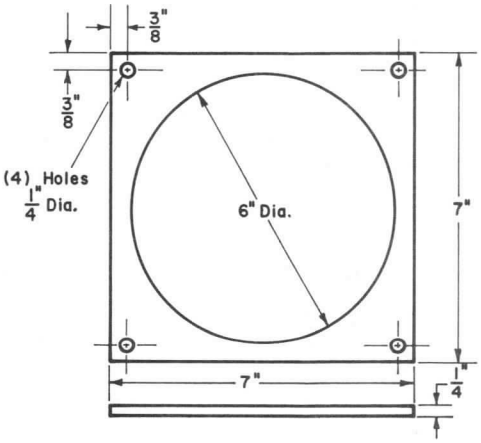

MOUNTING PLATE WL-23166

CE-A2370

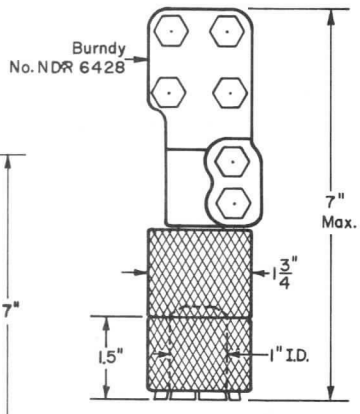

CONNECTOR
WL-23107

CE-A2339

The information contained herein is supplied without assuming responsibility for infringement of patents or other rights of third parties which may result from its use. No license is granted by implication or otherwise under any patent or patent rights of Westinghouse Electric Corporation.

Quick Reference Guide 86-617

Westinghouse MILITARY & INDUSTRIAL CATHODE RAY TUBES

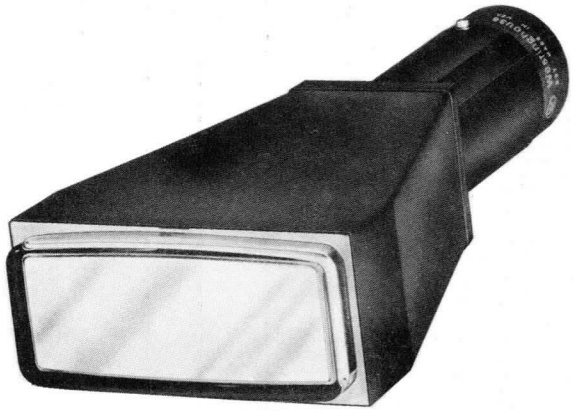

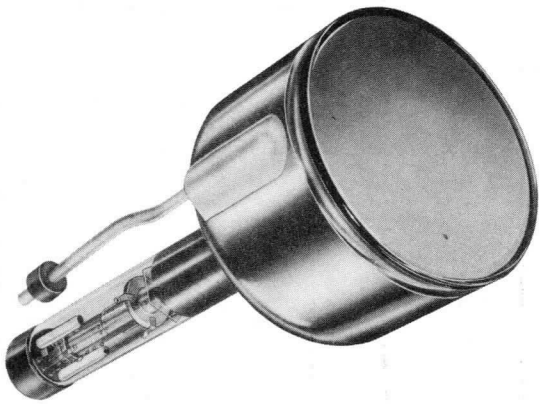



Westinghouse Electric Corporation
Electronic Tube Division • Elmira, N.Y.
Supersedes ET 1374 1/63
EFF. DATE: December 1964

TUBE TYPE	MECHANICAL					ELECTRICAL							
	MAXIMUM		FACEPLATE	MIN	METAL	MAX	OPERATION & PERFORMANCE						
	BULB DIM INCH	LENGTH INCH	RADIUS INCH	SCREEN DIM INCH	BACKED SCREEN	ANODE KV	ANODE KV	STYLE DEFL	TYPE FOCUS	LINE MILS	WIDTH AT	ELEMENTS PER DIA	SPECIAL FEATURES
1" ROUND													
WX-4497P–	1-5/8	12	Flat	1.0	Yes	12	10	30° Mag	ES	0.75	2 μA	1330	High Resolution
WX-4527P–	1-1/4	7-3/8	Flat	0.6	Yes	10	8	34° Mag	ES	0.75	1 μA	800	High Resolution
WX-4949P–	1-5/8	12	Flat	1.0	Yes	12	10	30° Mag	ES	0.75	1 μA	1330	Fiber-Optic Faceplate, High Res.
2" ROUND													
WX-4827P–	2-7/8	13	Flat	2-1/8	Yes	12	10	40° Mag	ES	0.7	1 μA	3040	Auxiliary Defl. Plates, High Res.
3" ROUND													
WX-4127P–	3-3/32	12-1/2	Flat	2-3/4	Yes	22	10	35° Mag	ES	1.4	10 μA	1960	High Resolution
WX-4916P–	3-3/32	12-5/8	Flat	2-1/4	Yes	25	10	30° Mag	ES	1.5	3 μA	1500	Fiber-Optic Faceplate, High Res.
WX-4927P–	3-3/32	14-3/8	Flat	2-3/4	Yes	15	10	32° Mag	Mag	1.5	4 μA	1830	High Resolution
WX-5013P–	3-1/8	9-7/16	Flat	2-5/8	No	3	1.5	ES	ES	7	4.5 ft L	390	Integral Magnetic Shield
WX-30020P–	3-1/4	5-7/8	Flat	2-3/4	Yes	12	10	70° Mag	ES	4	50 μA	680	Small Neck for Low Defl. Power
WX-30185P–	3-15/32	12-3/8	Flat	2-1/8	Yes	15	10	40° Mag	ES	0.7	1 μA	3040	High Resolution
4" ROUND													
WX-4912P–	4-1/8	13	Flat	3-1/4	Yes	20	10	42° Mag	ES	1.5	1 μA	2170	High Resolution
WX-4965P–	4-1/8	14	Flat	3-1/4	Yes	20	10	42° Mag	ES	1.5	1 μA	2170	Auxiliary Defl. Plates, High Res.
WX-30038P–	4-1/8	17-7/8	Flat	3-1/4	Yes	12.5	10	42° Mag	ES	0.65	1 μA	5000	Fiber-Optic FP, Very High Res.
WX-30039P–	4-1/8	17-7/8	Flat	3-1/4	Yes	20	10	42° Mag	ES	0.65	1 μA	5000	Very High Resolution
5" ROUND													
WX-4129P–	5-5/16	14-1/2	Flat	4-1/4	Yes	12.5	10	42° Mag	ES	1.5	2 μA	2830	Auxiliary Defl. Plates, High Res.
WX-4305P–	5-5/16	14	Flat	4-1/4	Yes	22	10	42° Mag	ES	1.5	4 μA	2830	Potted Flying Leads, High Res.
WX-4439P–	5-5/16	16-1/2	Flat	4-1/4	Yes	22	18	42° Mag	Mag	1.5	10 μA	2830	High Resolution
WX-4567P–	5-1/8	5	Flat	4-1/4	Yes	11	8	110° Mag	ES	8	150 μA	530	Very Compact
WX-4647P–	5-5/16	14-1/2	Flat	4-1/4	Yes	12.5	10	42° Mag	ES	1	1 μA	4250	High Resolution
WX-4793P–	5-1/8	12-1/2	Flat	4-1/4	Yes	17	12	40° Mag	ES	8	50 μA	530	—
WX-4796P–	5	7-1/2	24	4-1/4	Yes	15	8	70° Mag	ES	10	50 μA	425	Small Neck for Low Defl. Power
WX-4877P–	5-5/16	22-1/2	Flat	4-1/4	Yes	27	20	25° Mag	ES	2	4 μA	2125	Improved Defl. Linearity, High Res.
WX-4903P–	5-3/8	17-3/4	Flat	4-1/4	Yes	20	15	40° Mag	ES	0.65	1 μA	6500	Very High Resolution
WX-5006P–	5-1/4	14-3/4	Flat	6 cm × 10 cm	No	4.4	3	ES	ES	20	4.5 ft L	225	Post Accelerator
WX-5025P–	5-11/32	15-1/8	20	4-1/2	No	3.2	1.5	ES	ES	23	4 ft L	200	Integral Shield

WX-5038P–	5-3/8	15-1/8	Flat	4-1/2	No	3.2	1.5	ES	ES	23	4 ft L	200	—
WX-5321P–	5-3/8	17-3/4	2" Cyl	4-1/4 × 1/4	Yes	18	15	42° Mag	ES	0.7	1 μA	6400 × 360	Raised Fiber-Optic Strip Faceplate, Very High Resolution.
WX-30113P–	5	8-3/8	24	4-1/4	Yes	12	8	40° Max Mag	ES	12	50 μA	355	Small Neck Offset 1½" for Sector Scan
5CEP–	5-5/16	13-1/2	Flat	4-1/4	Yes	12.5	10	42° Mag	ES	1.5	4 μA	2830	High Resolution
5DEP–	5-11/32	15-1/8	20	4-1/2	No	3.2	1.5	ES	ES	23	4 ft L	200	Improved Defl. Sensitivity over 5UP–
5FP–A	5-1/32	11-1/2	24	4-1/4	No	8	7	53° Mag	Mag	10	200 μA	425	—
5UP–	5-11/32	15-1/8	20	4-1/2	No	3.0	1.5	ES	ES	23	4 ft L	200	—
5WP–	5-1/8	11-13/16	Flat	4-1/4	Yes	27	27	50° Mag	ES	8	20 μA	530	—
5ZP–	5-1/8	14-3/4	Flat	4-1/4	Yes	27	27	40° Mag	ES	5	30 μA	850	—

7" ROUND

WX-4541P–	7-1/16	8-1/2	24	6	Yes	10	8	70° Mag	ES	12	50 μA	500	Ruggedized, Small Neck
WX-4595P–	7-5/16	15-1/4	24	6	Yes	15	10	50° Mag	ES	2.75	10 μA	2200	Auxiliary Defl. Plates, High Res.
WX-5039P–	7-5/16	13-3/4	24	6	Yes	12	7	50° Mag	ES	12	100 μA	500	Laminated FP Implosion Safeguard
WX-30315	7-1/8	21-3/8	Flat	6	Yes	20	15	40° Mag	Mag	1.5	4 μA	4000	High Resolution.
7ABP–	7-5/16	13-1/2	24	6	No	10	7	50° Mag	ES	12	100 μA	500	—
7AUP–	7-1/16	8-1/2	24	6	Yes	10	8	70° Mag	ES	12	50 μA	500	Small Neck for Low Defl. Power
7BP–B	7-1/8	13-5/8	24	6	No	8	7	53° Mag	Mag	12	200 μA	500	—
7MP–	7-5/16	13-1/8	24	6	No	8	7	50° Mag	Mag	12	200 μA	500	—
7TP–	7-5/16	13-1/2	24	6	Yes	12	10	50° Mag	ES	12	100 μA	500	—

9" ROUND

WX-4596P–	9	9-1/2	Flat	7.6	Yes	12	10	70° Mag	ES	12	50 μA	630	Laminated FP Implosion Safeguard Small Neck for Low Defl. Power
WX-30026P–	9-5/16	22-1/8	Flat	8-1/4	Yes	25	20	44° Mag	ES	2.5	4 μA	3300	High Resolution

10" ROUND

WX-4924P–	10-9/16	17-1/2	42	9	Yes	22	10	50° Mag	ES	15	50 μA	600	Auxiliary Deflection Plates
WX-5357P–	10-9/16	18	42	9	Yes	22	10	50° Mag	ES	6	20 μA	1500	—
WX-30176P–	10-1/4	20-1/2	Flat	9	Yes	22	10	60° Mag	ES	2	4 μA	4500	Auxiliary Defl. Plates, High Res.
10KP–A	10-9/16	18	42	9	No	12	9	50° Mag	Mag	15	200 μA	600	—
10KP–B	10-9/16	18	42	9	Yes	12	9	50° Mag	Mag	15	200 μA	600	—
10SP–	10-9/16	17	42	9	Yes	20	12	50° Mag	ES	15	100 μA	600	—
10UP–A	10-9/16	18	42	9	Yes	12	10	50° Mag	ES	15	100 μA	600	—
10WP	10-9/16	17-5/16	42	9	No	12	10	50° Mag	ES	17	100 μA	530	—
10WP–A	10-9/16	17-5/16	42	9	Yes	12	10	50° Mag	ES	17	100 μA	530	—

12" ROUND

12ABP–A	12-9/16	18-3/8	40	11	Yes	12	10	55° Mag	ES	19	100 μA	580	—
12SP–B	12-9/16	19-1/8	40	11	Yes	10	9	55° Mag	Mag	17	200 μA	650	—

TUBE TYPE	MECHANICAL				METAL BACKED SCREEN	ELECTRICAL							SPECIAL FEATURES
	MAXIMUM		FACEPLATE	MIN		MAX	OPERATION & PERFORMANCE						
	BULB DIM INCH	LENGTH INCH	RADIUS INCH	SCREEN DIM INCH		ANODE KV	ANODE KV	STYLE DEFL	TYPE FOCUS	LINE MILS	WIDTH AT	ELEMENTS PER DIA	
16" ROUND													
WX-5008P–	16	25-1/8	56-5/16	14-1/2	Yes	15	10	53° Mag	ES	15	100 μA	970	Double-Axis Auxiliary Defl. Plates
16AKP–	16	22-7/16	56-5/16	14-1/2	Yes	14	12	53° Mag	ES	25	100 μA	580	—
16ALP–	16	23-15/16	56-5/16	14-1/2	Yes	14	12	53° Mag	ES	25	100 μA	580	—
RECTANGULAR TYPES													
WX-4030P–	4-7/32 × 1-31/32	10	60	3-1/2 × 1-1/8	No	3	2.5	ES	ES	28	30 μA	125 Hor	Integral Shield, Ruggedized
WX-5064P–	9-7/8 × 7-5/8	13-7/16	17-1/2	9-1/16 × 6-5/8	Yes	14	10	90° Mag	ES	8	40 μA	1130 Hor	—
WX-30072P–	7-7/8 × 6-1/16	8-15/16	27	7-3/16 × 5-1/8	Yes	16	12	90° Mag	ES	15	50 μA	340 Vert	Low Video Drive
21EWP–	20-3/8 × 16-1/2	23-13/32	33	19-1/16 × 15-1/16	Yes	20	16	72° Mag	Mag	18	40 ft L	840 Vert	—

RUGGEDIZED TUBE - YOKE - SHIELD INTEGRAL PACKAGES

TUBE TYPE	BASIC UNIT	PACKAGE MAX DIA	PACKAGE MAX LENGTH	FACE MIN DIA	ANODE MAX KV	ANODE KV	FOCUS TYPE	LINE WIDTH MILS	AT	ELEMENTS PER DIA	SPECIAL FEATURES
WX-5328P–	WX-5062P– (3" Tube)	4.645"	13.125"	2.46"	15	10	ES	0.65	1 μA	3800	—
WX-30005P–	WX-4903P– (5" Tube)	6-9/16"	17-3/4"	4-1/4"	18	15	ES	0.65	1 μA	6500	—
WX-30099P–	WX-5321P– (5" Tube)	6-9/16"	17-3/4"	4-1/4" × 1/4"	18	15	ES	0.7	1 μA	6400 × 360	Raised Fiber-Optic Strip in Faceplate

TUBE AND COMPONENT ASSEMBLIES

WX-4694P– Tube WX-4527 (1" Tube), Deflection Yoke, 10-Power Direct-Viewed Occular, Hand-Size Package, 4-Foot Flexible Cable for Connections.

WX-5062P– Tube WX-30185 (3" Tube), Potted Mounting Ring.

NOTES

1. Elements per diameter value given is limiting value assuming no deflection defocusing. Approximate TV-lines resolution (as defined by EIA) is obtained by multiplying this value by 2.
2. Fiber-Optic-faceplate tubes should be operated with the anode connected to ground.
3. Some of the above tubes can be furnished with any of the following variations: Integral Graticules, Fiber-Optic Faceplates, Yokes, Shields or Mounting Fixtures.
4. All the variants of JEDEC-registered types have not been listed. The desired one will be available on request. Westinghouse Military & Industrial Cathode Ray Tubes can be supplied with most of the standard JEDEC phosphors.
5. The WX-types are undergoing development and their specifications and performance are subject to change.
6. This listing illustrates the breadth and depth of the Westinghouse Display Tube capability. For the particular tube, best suited to your system requirements, contact your nearest Westinghouse Electronic Components & Specialty Products Salesman.

MILITARY & INDUSTRIAL CATHODE RAY TUBE TYPE 3JP-A

BASIC CHARACTERISTICS

3" ROUND SPHERICAL FACEPLATE
ELECTROSTATIC FOCUS & DEFLECTION
POST-DEFLECTION ACCELERATION

TYPICAL APPLICATION

OSCILLOGRAPHIC

SPECIAL FEATURES

CLOSELY CONTROLLED DEFLECTION FACTORS
2% MAX. PATTERN DISTORTION
ANGLE BETWEEN TRACES 90° ± 1°

ELECTRICAL

Cathode	Coated Unipotential
Heater:	
Voltage	6.3 Volts
Current	0.6 Ampere
Direct Interelectrode Capacitances:	
Grid 1 to all other Electrodes	8 pf
Cathode to all other Electrodes	8 pf
D1 to D2	2.5 pf
D3 to D4	2 pf
D1 to all other Electrodes	8 pf
D2 to all other Electrodes	7 pf
D3 to all other Electrodes	7 pf
D4 to all other Electrodes	8 pf
Focusing Method	Electrostatic
Deflection	Electrostatic

OPTICAL

Screen Phosphor	Note 1
Faceplate:	
Configuration	Spherical
Glass	Clear
Transmission	90%

MECHANICAL

Mounting Position	Any
Net Weight (Approx.)	10 Ounces

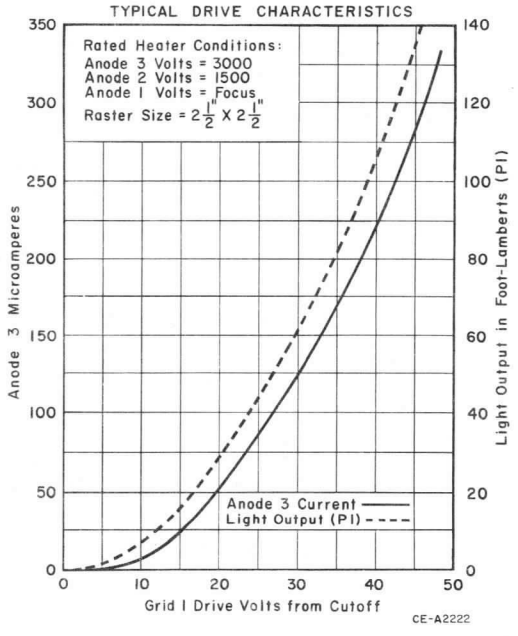

ABSOLUTE MAXIMUM RATINGS

Anode 3 Voltage	7200 max. Volts
Anode 2 Voltage	2400 max. Volts
Anode 1 Voltage (Focus)	1800 max. Volts
Grid 1 Voltage:	
Negative Bias Value	220 max. Volts
Positive Bias Value	0 max. Volts
Positive Peak Value	0 max. Volts
Peak Heater-Cathode Voltage:	
Heater Negative with respect to Cathode:	
During warm-up period of 15 sec. max.	410 max. Volts
After Equipment warm-up period	180 max. Volts
Heater Positive with respect to Cathode	180 max. Volts
Peak Voltage between Anode 2 and any Deflection Electrode	550 max. Volts

LIMITING CIRCUIT VALUES

Grid 1 Circuit Resistance	1.5 max. Megohms
Resistance in any Deflection Electrode Circuit (Note 2)	5 max. Megohms

TYPICAL OPERATING CONDITIONS

Anode 3 Voltage	3000	4000	Volts
Anode 2 Voltage	1500	2000	Volts
Anode 1 Voltage (Focus)	300 to 515	400 to 690	Volts
Grid 1 Spot Cutoff Voltage	−34 to −56	−45 to −75	Volts
Light Output for P1 (Note 3)	25	– min.	Ft-L
Linewidth for P1 (Note 4)	0.03	– max.	Inch
Modulation (Note 5)	35	– max.	Volts
Deflection Factors:			
D1 D2	135 to 165	180 to 220	V/Inch
D3 D4	100 to 122	133 to 163	V/Inch
Deflection Factor Uniformity (Note 6)		3	%
Spot Position (Note 7)		5	mm
Anode 1 Current (Focus) for any Operating Condition		−15 to +15	μA
Pattern Distortion (Note 8)		2	%

NOTES

1. Westinghouse Military & Industrial Cathode Ray Tubes can be supplied with most of the standard JEDEC phosphors.
2. It is recommended that the deflection electrode circuit resistances be approximately equal.
3. Light output is measured on a 2" square raster with 3000 × 60 CPS scan rate at an anode 3 current of 100 microamperes.
4. Line width is measured by the shrinking raster method with an anode 3 current of 100 microamperes.

5. **Modulation is the video drive above cutoff necessary to achieve an anode 3 current of 100 microamperes.**

6. The deflection factor (for both D1-D2 and D3-D4 plate pairs, separately) for any deflection of less than 75% of the useful scan will not differ from the deflection factor at 25% of the useful scan by more than 3%.

7. With deflecting electrodes connected to anode 2, and with the tube shielded against external magnetic fields, the focused spot is within a 5 mm radius circle centered on the tube face.

8. With a raster pattern adjusted so that its widest points just touch the sides of a 2.104" square, the edges of the raster will fall within the area bounded by the 2.104" square and an inscribed 2.021" square.

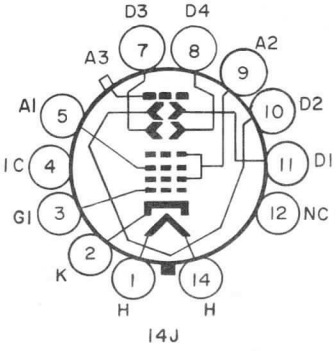

14J

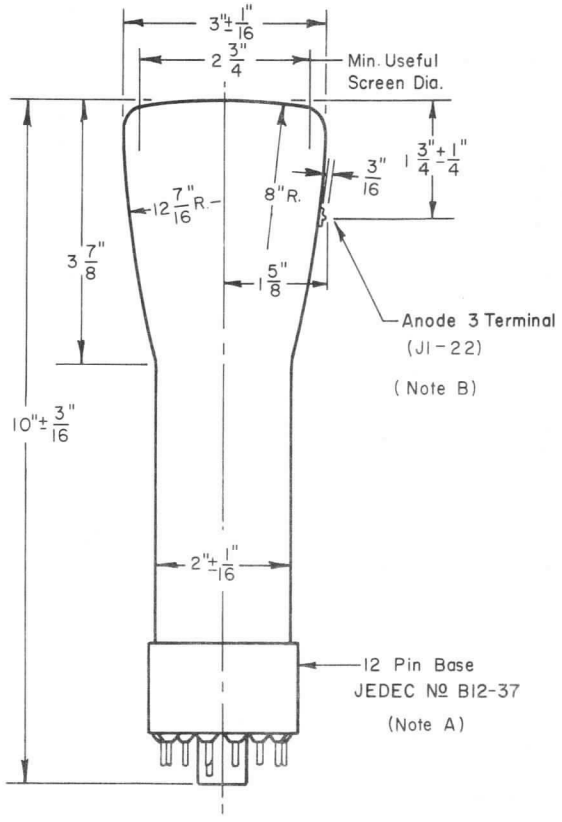

A. **D1-D2 trace alinement with plane defined by base pin position 5 and tube axis has an angular tolerance of 10°. Angle between D1-D2 trace and D3-D4 trace is 90° ± 1°. Positive voltage on D1 (pin 11) will move spot toward pin 5. Positive voltage on D3 (pin 7) will move spot toward midpoint between pins 1 & 2.**

B. **The angle between the D1-D2 trace and the plane defined by the anode 3 contact and the tube axis will not exceed 10%.**

The information contained herein is supplied without assuming responsibility for infringement of patents or other rights of third parties which may result from its use. No license is granted by implication or otherwise under any patent or patent rights of Westinghouse Electric Corporation.

OSCILLOGRAPH TUBE 5AMP

Type 5AMP is a 5" electrostatic focus and deflection cathode ray tube designed for use in high quality, wide band oscillographs. Optically it features a flat face for accurate visual observation.

Electrical features include a close control of tolerances, high deflection sensitivity, low plate capacitances, and a low voltage focus electrode.

ELECTRICAL

Cathode	Coated Unipotential	
Heater:		
Voltage (ac or dc)	6.3	Volts
Current	0.6 ± 10%	Ampere
Direct Interelectrode Capacitances:		
Grid 1 to All Other Electrodes	5.5	μμf
D1 to D2	3.9	μμf
D3 to D4	2.5	μμf
D1 to All Other Electrodes	7.9	μμf
D2 to All Other Electrodes	7.4	μμf
D3 to All Other Electrodes	5.5	μμf
D4 to All Other Electrodes	4.8	μμf
Focusing Method	Electrostatic	
Deflection Method	Electrostatic	

MECHANICAL

Mounting Position	Any			
Screen:				
Useful Screen Diameter	4-1/2" Min.			
Phosphor	P1	P2	P7	P11
Fluorescence	Green	Green	Blue	Blue
Phosphorescence		Green	Yellow	
Persistence	Medium	Long	Long	Short
Bulb Dimensions:				
Diameter	5-1/4" ± 3/32"			
Overall Length	17-5/8" ± 1/4"			
Net Weight (Approx.)	2-1/4 lbs.			
Shipping Weight (Approx.)	3-3/4 lbs.			
Base	12 Pin Medium Shell Diheptal (JEDEC B12-37)			
Basing	14 U			
Neck Contacts	Small Ball Caps (JEDEC J1-25)			

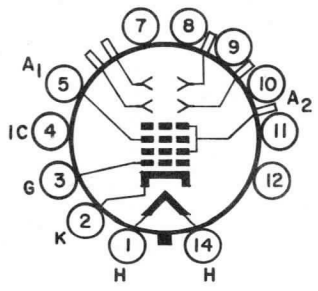

14 U

MAXIMUM RATINGS

Design Center Values

Anode 2 Voltage	6000	max.	Volts
Anode 1 Voltage	1500	max.	Volts
Grid 1 Voltage:			
Negative Bias Value	200	max.	Volts
Positive Bias Value	0	max.	Volts
Positive Peak Value	0	max.	Volts
Peak Voltage Between Anode 2 and Deflecting Electrode	1200	max.	Volts
Peak Heater-Cathode Voltage:			
Heater Negative with Respect to Cathode:			
During Warm-up Period of 15 Sec.	410	max.	Volts
After Equipment Warm-up	180	max.	Volts
Heater Positive with Respect to Cathode	180	max.	Volts

LIMITING CIRCUIT VALUES

Grid 1 Circuit Resistance	1.5	max.	Megohms
Resistance in any Deflecting Electrode Circuit (Note 1)	1.0	max.	Megohms

EQUIPMENT DESIGN RANGES

Anode 1 Current	−15 to +15	μadc
Grid 1 Voltage for Visual Cut-off	−13.6 to −22.4	Vd-c/2nd Anode KV
Deflection Factors:		
D1 & D2	16 to 20	Vd-c/in./2nd Anode KV
D3 & D4	8 to 10	Vd-c/in./2nd Anode KV

TYPICAL OPERATING CONDITIONS

Anode 2 Voltage	2500	Volts
Anode 1 Voltage	0 to 300	Volts
Grid 1 Voltage for Visual Cut-off	−34 to −56	Volts
Deflection Factor:		
D1 & D2	40 to 50	Vd-c/in.
D3 & D4	20 to 25	Vd-c/in.
Max. Deflection Factor Difference (Note 2)	1 Percent	
Min. Useful Scan		
D1 & D2	4.00"	
D3 & D4	2.50"	
Max. Pattern Distortion at 75% of Useful Scan (Note 3)	2 Percent	
Max. Line Width (Note 4)	0.032"	
Spot Position (Note 5)	8 mm	

NOTES

1. It is recommended that the deflecting-electrode-circuit resistances be approximately equal.
2. The deflection factors at 75% or less of the useful scan will not vary more than the indicated value from the deflection factors at 25% of the useful scan.
3. A raster adjusted so that its widest points are tangent to sides of a 1.912" × 3.060" rectangle, will be contained by this rectangle and an inscribed 1.837" × 2.940" rectangle.
4. Measured in accordance with MIL-E-1.
5. With the deflection plates connected to anode 2 and with suitable shielding, the center of the undeflected spot will fall within a circle of indicated radius.

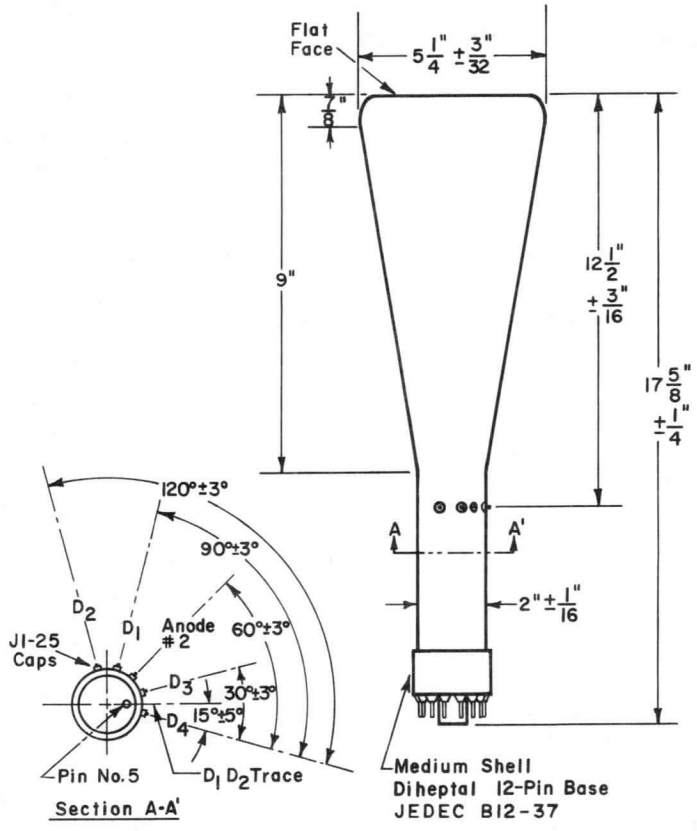

The information contained herein is supplied without assuming responsibility for infringement of patents or other rights of third parties which may result from its use. No license is granted by implication or otherwise under any patent or patent rights of Westinghouse Electric Corporation.

MILITARY & INDUSTRIAL CATHODE RAY TUBE TYPE 5CEP–

BASIC CHARACTERISTICS
5" Round Flat Faceplate
Electrostatic Focus
42° Magnetic Deflection
Aluminized Screen

TYPICAL APPLICATIONS
Photographic Recording
Flying Spot Scanning

SPECIAL FEATURES
0.0015" Line Width

ELECTRICAL

Cathode	Coated Unipotential	
Heater:		
Voltage	6.3	Volts
Current	0.6	Ampere
Direct Interelectrode Capacitances:		
Grid 1 to All Other Electrodes	9	pf
Grid 2 to All Other Electrodes	7	pf
Cathode to All Other Electrodes	7	pf
Focusing Method	Electrostatic	
Deflection	42° Magnetic	

OPTICAL

Screen Phosphor	Note 1
Faceplate:	
Configuration (Note 2)	Flat
Glass	Neutral Gray
Transmission	75%
Index of Refraction	1.52

MECHANICAL

Mounting Position	Any
Screen Diameter	4-1/4" Min.
Bulb Diameter	5-1/4" ± 1/16"
Overall Length	13" ± 1/2"
Anode Terminal	AMP #832692
Base	JEDEC B6-63
Net Weight	2 Pounds

MAXIMUM RATINGS

Absolute Maximum Values

Anode Voltage	12500 max.	Volts
Grid 3 (Focus) Voltage (Note 3)	5000 max.	Volts
Grid 2 Volts	600 max.	Volts
Grid 1 Volts:		
Negative Bias Value	180 max.	Volts
Positive Bias Value	0 max.	Volts
Positive Peak Value	0 max.	Volts
Peak Heater-Cathode Voltage:		
Heater Negative with respect to Cathode:		
During warm-up period of 15 seconds max.	410 max.	Volts
After Equipment warm-up period	180 max.	Volts
Heater Positive with respect to Cathode	180 max.	Volts

LIMITING CIRCUIT VALUE

Grid 1 Circuit Resistance	1.5 max. Megohms
Grid 2 Circuit Resistance	See Note 4

TYPICAL OPERATING CONDITIONS

Anode Voltage	10000	Volts
Grid 3 (Focus) Voltage (Note 3)	2070 to 2370	Volts
Grid 2 Voltage	300	Volts
Grid 1 Spot Cutoff Voltage	–40 to –65	Volts
Line Width (Note 5) with P-11	0.0015	Inch
Spot Position (Note 6)	7.5	mm

NOTES

1. Westinghouse Military & Industrial Cathode Ray Tubes can be supplied with most of the standard JEDEC phosphors.
2. The faceplate is a ground and polished flat plate 0.245" ± 0.005" thick with a max. deviation from mean thickness for individual plates of 0.001". Maximum deviation from flatness is 0.006 within a circle of 4-1/4" diameter centered on the tube axis.
3. The grid 3 electrode may draw a peak current of 2 milliamperes with a representative value of 300 microamperes under normal operation.
4. A grid 2 circuit resistance of approximately 0.5 megohm should be provided. In addition it is recommended that a suitable device be used to limit grid 2 voltage to the maximum rated value to prevent tube damage in case of a momentary arc.
5. Line width is defined as the distance between the half-amplitude points of the light-energy distribution of the line and is measured with a peak current of 4 microamperes, using the slit-scan technique described in Westinghouse reprint #5510. Line width with other phosphors may vary slightly. Dynamic focus modulation is necessary to maintain optimum resolution over entire face. Close control of supply regulation and ripple is necessary to ensure optimum focus. Typically, a 0.1% change in focus or anode voltage, from best value, will increase spot size approximately 10%.
6. With the tube shielded against external magnetic fields, the undeflected focused spot lies within a circle of 7.5 mm radius concentric with the faceplate.

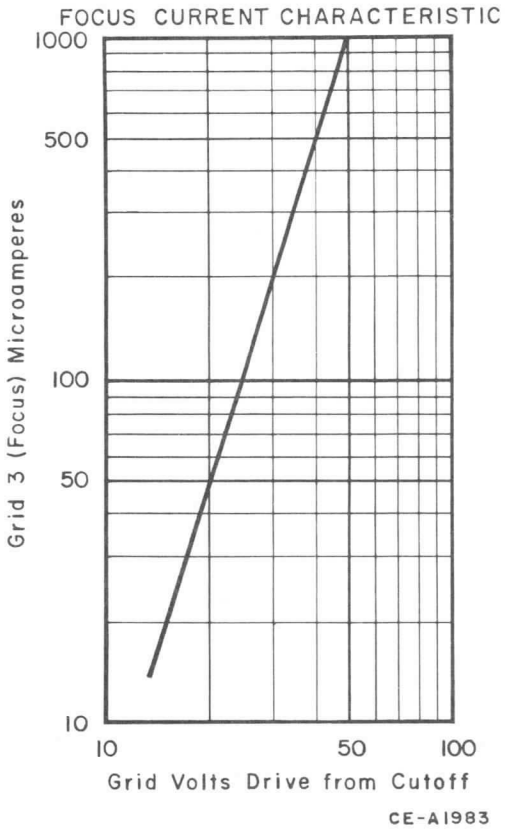
FOCUS CURRENT CHARACTERISTIC
1000
500
100
50
10
Grid 3 (Focus) Microamperes
10
50
100
Grid Volts Drive from Cutoff
CE-A1983

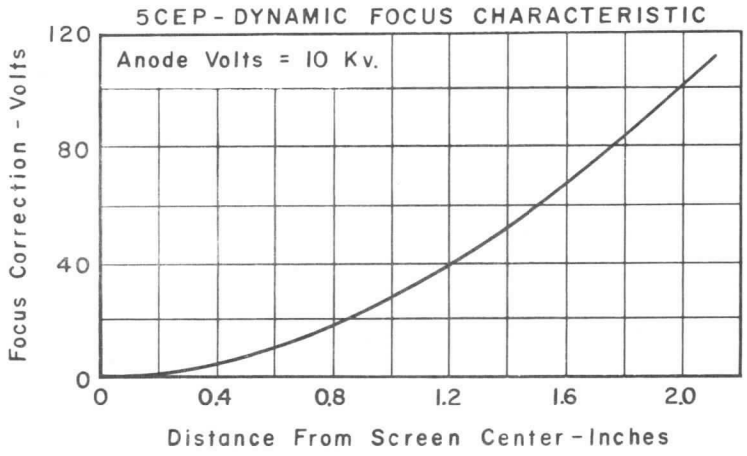
5CEP - DYNAMIC FOCUS CHARACTERISTIC
Anode Volts = 10 Kv.
120
80
40
0
Focus Correction - Volts
0
0.4
0.8
1.2
1.6
2.0
Distance From Screen Center - Inches

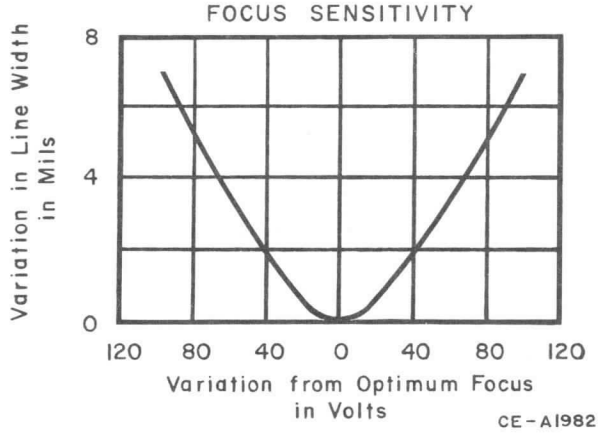
FOCUS SENSITIVITY
8
4
0
Variation in Line Width in Mils
120
80
40
0
40
80
120
Variation from Optimum Focus in Volts
CE-A1982

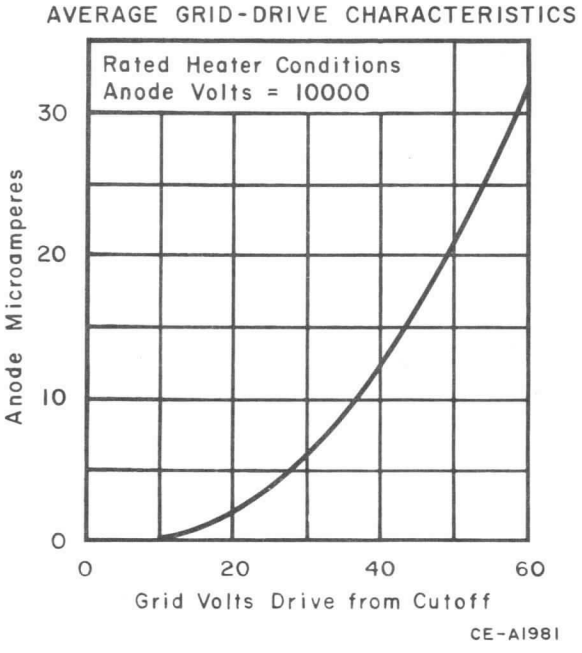
AVERAGE GRID-DRIVE CHARACTERISTICS
Rated Heater Conditions
Anode Volts = 10000
30
20
10
0
Anode Microamperes
0
20
40
60
Grid Volts Drive from Cutoff
CE-A1981

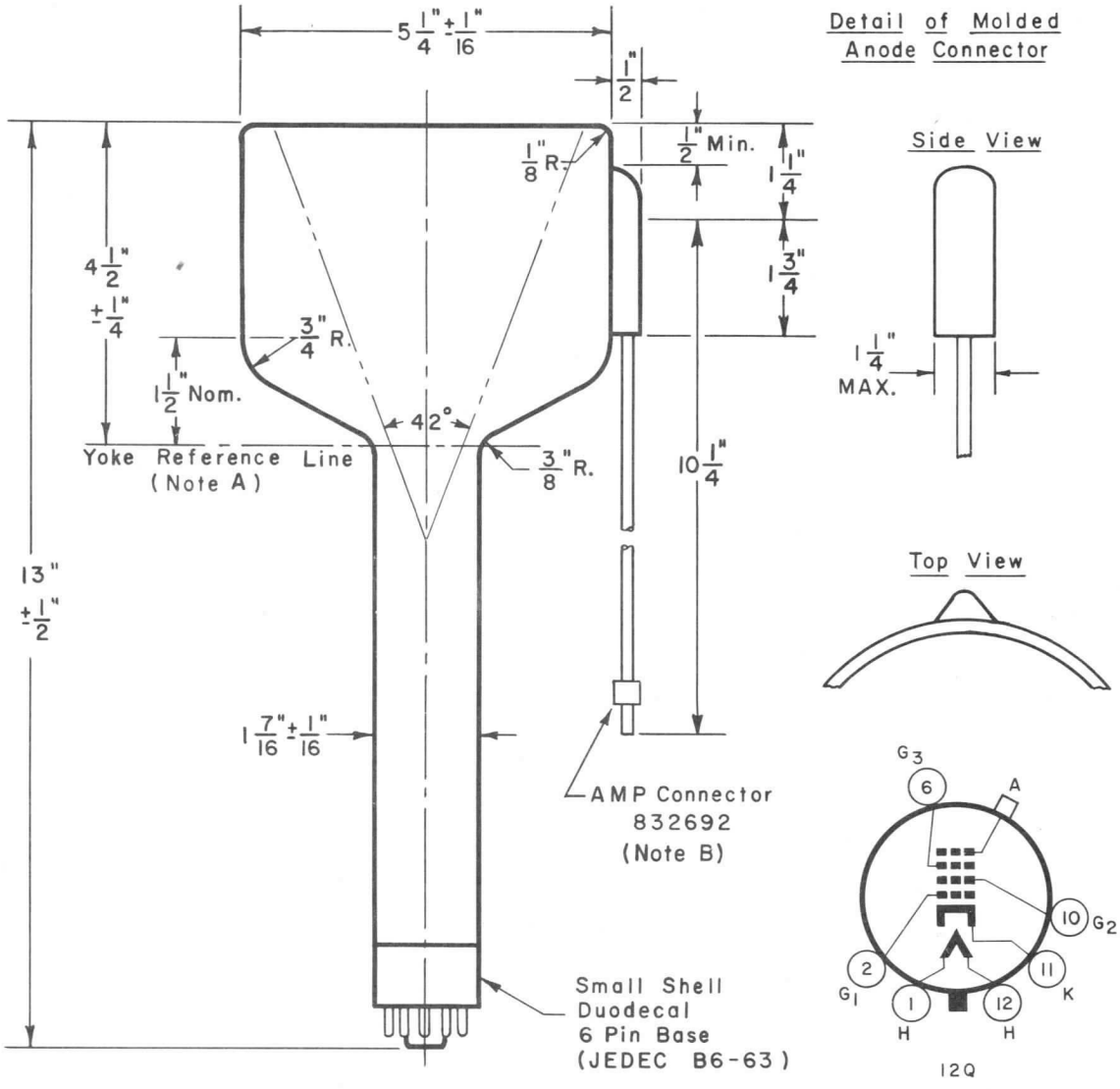

OUTLINE NOTES

A. The Yoke Reference Line is determined by JEDEC Reference Line Gage No. 112.

B. The plane defined by the tube axis and pin position 3 will be within 10° of the plane defined by the tube axis and the anode.

The information contained herein is supplied without assuming responsibility for infringement of patents or other rights of third parties which may result from its use. No license is granted by implication or otherwise under any patent or patent rights of Westinghouse Electric Corporation.

February 1, 1965

CATHODE RAY TUBE TYPE 5DEP–

BASIC CHARACTERISTICS	TYPICAL APPLICATIONS	SPECIAL FEATURES
5" ROUND GLASS BULB		HIGHER DEFLECTION
MONO-ACCELERATOR	OSCILLOGRAPHY	SENSITIVITY
ELECTROSTATIC FOCUS & DEFLECTION		THAN 5UP–

ELECTRICAL

Cathode	Coated Unipotential	
Heater:		
Voltage (ac or dc)	6.3	Volts
Current	0.6 ± 10%	Ampere
Direct Interelectrode Capacitances:		
Grid 1 to All Other Electrodes	7.5	pF
D1 to D2	5.2	pF
D3 to D4	7.0	pF
D1 to All Other Electrodes	10.1	pF
D2 to All Other Electrodes	7.5	pF
D3 to All Other Electrodes	8.1	pF
D4 to All Other Electrodes	9.2	pF
Focusing Method	Electrostatic	
Deflection Method	Electrostatic	

OPTICAL

Screen Phosphor	Note 1
Faceplate:	
Configuration	Spherical
Glass	Clear

MECHANICAL

Mounting Position	Any
Net Weight	1-1/4 Pounds
Bulb	JEDEC J42J1

MAXIMUM RATINGS

Design Center Values

Anode 2 Voltage	2750 max.	Volts
Anode 1 Voltage	1100 max.	Volts
Grid 1 Voltage:		
Negative Bias Value	200 max.	Volts
Positive Bias Value	0 max.	Volts
Positive Peak Value	2 max.	Volts
Peak Voltage Between Anode 2 and any Deflecting Electrode	550 max.	Volts
Peak Heater-Cathode Voltage:		
Heater Negative with Respect to Cathode:		
During Warm-up Period of 15 Sec.	410 max.	Volts
After Equipment Warm-up	180 max.	Volts
Heater Positive with Respect to Cathode	180 max.	Volts

LIMITING CIRCUIT VALUES

Grid 1 Circuit Resistance	1.5 max.	Megohms
Resistance in any Deflecting Electrode Circuit (Note 2)	5.0 max.	Megohms

TYPICAL OPERATING CONDITIONS

For Anode 2 Voltage	1000	2000	Volts
Anode 1 Voltage	170-320	340-640	Volts
Max. Grid 1 Voltage for Visual Cutoff	–45	–90	Volts
Deflection Factor:			
D1 & D2	24-32	48-64	Volts dc/in
D3 & D4	13.5-18.5	27-37	Volts dc/in
Spot Position (Note 3)	15	15	mm

TYPICAL DRIVE CHARACTERISTICS

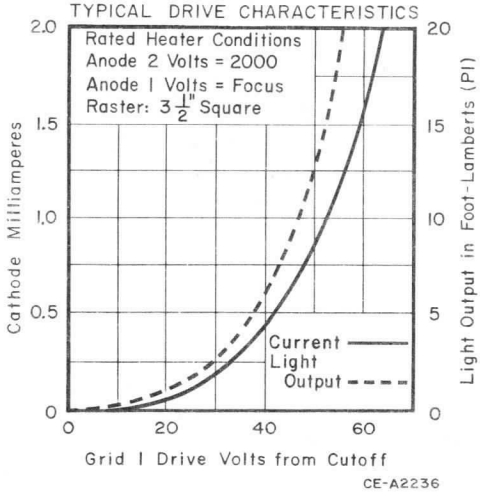

CE-A2236

NOTES

1. Westinghouse Military & Industrial Cathode Ray Tubes can be supplied with most of the standard JEDEC phosphors.
2. It is recommended that the deflecting-electrode-circuit resistances be approximately equal.
3. With deflecting electrodes connected to anode 2, spot is within a 15 millimeter square centered on faceplate with sides parallel to scans.

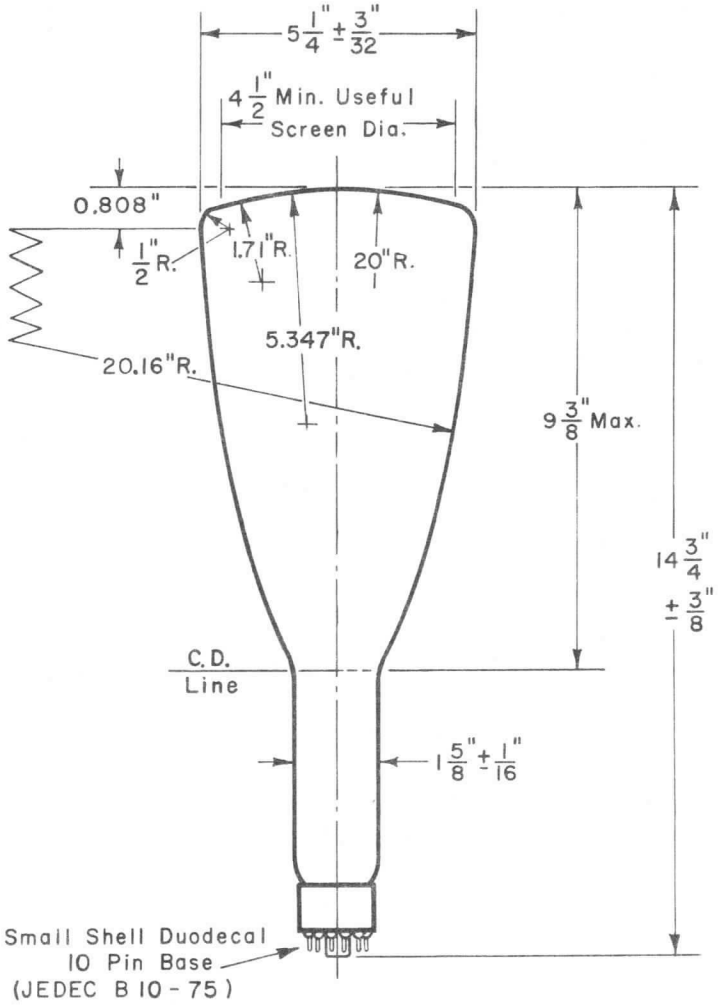

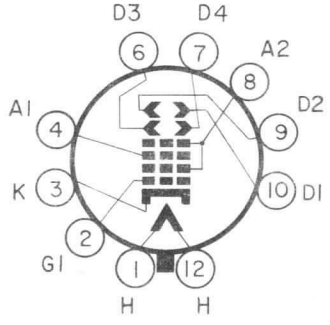

D1-D2 trace alignment with base pin 4 and tube axis has angular tolerance of 10°. Angle between D1-D2 trace and D3-D4 trace is 90° ± 1°. Positive voltage on D1 (pin 10) will move spot toward pin 4. Positive voltage on D3 (pin 6) will move spot toward pin 1.

The information contained herein is supplied without assuming responsibility for infringement of patents or other rights of third parties which may result from its use. No license is granted by implication or otherwise under any patent or patent rights of Westinghouse Electric Corporation.

Westinghouse

5FP7A
5FP7B
5FP11
5FP11A
5FP14
5FP14A

January 1, 1961

RADAR AND OSCILLOGRAPH TUBE TYPES
5FP7A, 5FP7B, 5FP11, 5FP11A, 5FP14 AND 5FP14A

The 5FP7A, 5FP11 and 5FP14 are five inch cathode ray tubes with magnetic-focus and deflection, differing only in the spectral energy emission of their phosphors, P7, P11 and P14.

The 5FP7B, 5FP11A and 5FP14A are respectively identical except for the use of high resolution gun giving much smaller line width and improved spot shape.

The bulb has a relatively flat face which permits the use of a external, transparent, calibrated scale.

ELECTRICAL:

Cathode			Coated Unipotential
Heater:			
Voltage (ac or dc)		6.3	Volts
Current		0.6 ± 10%	Ampere
Direct Interelectrode Capacitances:			
Grid 1 to all Other Electrodes		8	μμf
Cathode to all Other Electrodes		5	μμf
Focusing Method			Magnetic
Deflection			Magnetic
Deflection Angle (Approx.)			53°
Screen: Phosphor	P7	P11	P14
Fluorescence	Blue-White	Blue	Blue
Phosphorescence	Yellow	Blue	Orange
Persistence	Long	Short	Medium-Long

MECHANICAL:

Mounting Position	Any
Minimum Useful Screen Diameter	4-1/4"
Greatest Bulb Diameter	5-1/32"
Overall Length	11-1/8" + 3/8"
Bulb	J 39-1/2 L1
Faceplate	Clear Glass
Anode Terminal	Recessed Small-Ball Cap, (JEDEC J1-22)
Base	Long Medium-Shell Octal 8-Pin Base (JEDEC B8-65)
Basing	5AN
Net Weight (Approx.)	1 lb. 2 oz.
Shipping Weight	3 Pounds

MAXIMUM RATINGS:

Design Center Values

Anode Voltage	12,000	max.	Volts
Grid 2 Voltage	700	max.	Volts
Grid 1 Voltage:			
Negative-Bias Value	180	max.	Volts
Positive-Bias Value	0	max.	Volts
Positive-Peak Value	2	max.	Volts
Peak-Grid-1 Drive from Cut-off	65	max.	Volts
Peak Heater-Cathode Voltage			
Heater Negative with Respect to Cathode:			
During Warm-up Period of 15 seconds max.	410	max.	Volts
After Equipment Warm-up	180	max.	Volts
Heater Positive with Respect to Cathode	180	max.	Volts

MAXIMUM CIRCUIT VALUES:

Grid 1 Circuit Resistance	1.5	Megohms

TYPICAL OPERATING CONDITIONS:

Anode Voltage	7000	Volts
Grid 2 Voltage	250	Volts
Grid 1 Voltage	−25 to −70	Volts
Focusing-Coil Current (Approx.)	115	Ma.
Line Width ♦	0.010	Inch
Spot Position	9	mm

♦ Stated value applies only to 5FP7B, 5FP11A and 5FP14A and is measured with an anode current of 200 microamperes following method of MIL-E-1D paragraph 4.12.6.2.

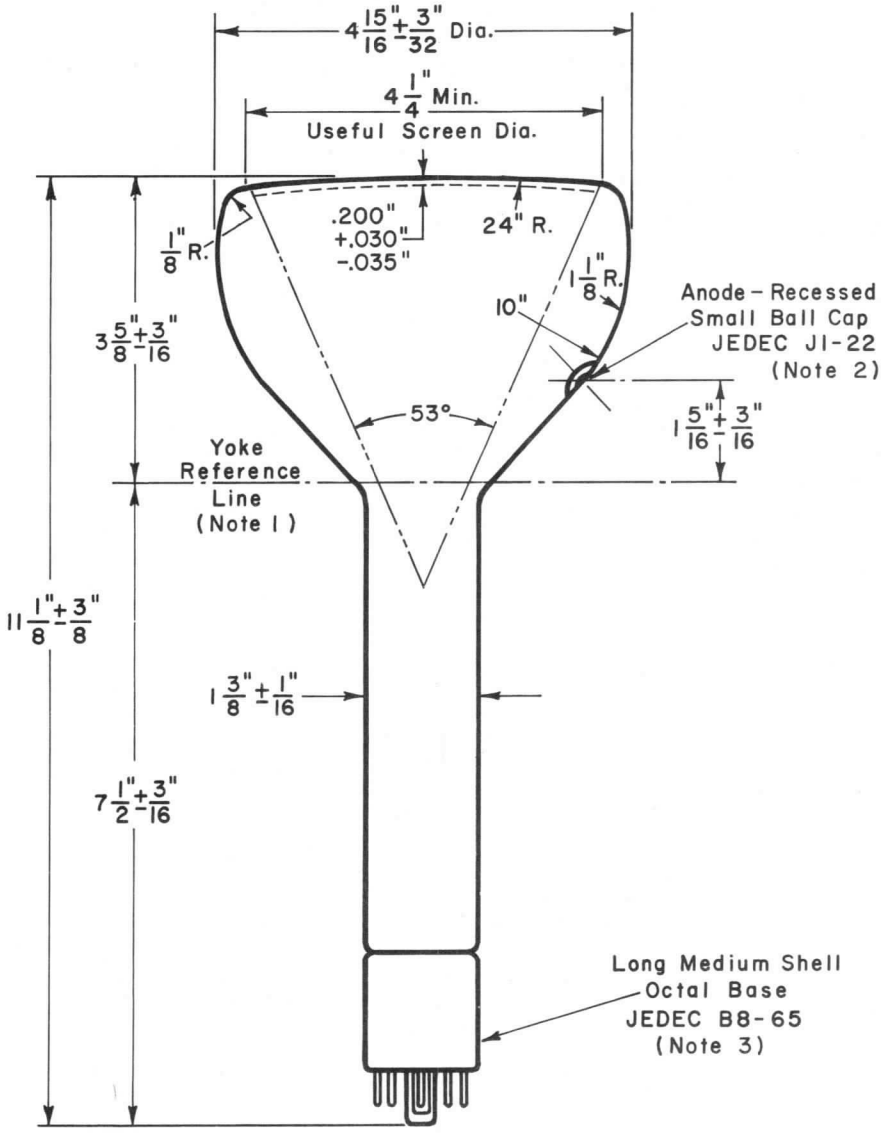

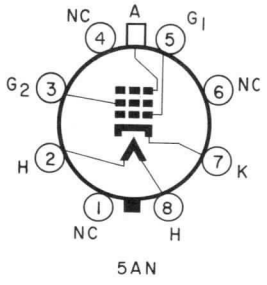

5AN

Note 1: Yoke Reference Line is determined by position of rest on bulb cone of gauge 1.430" +0.003" –0.000" ID and 2" long.

Note 2: Anode terminal alignment with base pin 5 has angular tolerance of ± 10°.

Note 3: The socket should not be rigidly mounted, but should be allowed to move freely on flexible leads.

Westinghouse

Industrial & Military CRT

Type: 5UP-

5" (127mm) Round Faceplate
Electrostatic Focus & Deflection
Line Width = 0.023" (0.58mm)

Basic Characteristics
5" Round Faceplate
Electrostatic Focus & Deflection

Typical Applications
Oscillography

Special Features
Mono-Accelerator Voltage
Line Width = 0.023" (0.58mm)

Electrical

Cathode	Coated Unipotential
Heater:	
Voltage	6.3 Volts
Current	0.6 Ampere
Direct Interelectrode Capacitances:	
Grid 1 to All Other Electrodes	8 pF
D1 to D2	2.5 pF
D3 to D4	2.5 pF
D1 to All Other Electrodes	11 pF
D2 to All Other Electrodes	8 pF
D3 to All Other Electrodes	7 pF
D4 to All Other Electrodes	8 pF
Focusing Method	Electrostatic
Deflection	Electrostatic

Optical

Screen Phosphor	Note 1
Faceplate:	
Configuration	Spherical
Glass	Clear

Mechanical

Mounting Position	Any
Net Weight (Approx.)	1.25 Pounds
	0.57 Kilogram

Absolute Maximum Ratings

Anode 2 Voltage	2500 max. Volts
Anode 1 (Focus) Voltage	1000 max. Volts
Grid 1 Voltage:	
Negative Bias Value	200 max. Volts
Positive Bias Value	0 max. Volts
Positive Peak Value	2 max. Volts
Peak Heater-Cathode Voltage	
Heater Negative with respect to Cathode:	
During Warm-up Period of 15 sec. max.	410 max. Volts
After Equipment Warm-up Period	180 max. Volts
Heater Positive with respect to Cathode:	
Peak	180 max. Volts
DC	25 max. Volts
Peak Voltage Between Anode 2 and Any Deflection Electrode	500 max. Volts

Limiting Circuit Values

Grid 1 Circuit Resistance	1.5 max. Megohms
Resistance in Any Deflection Electrode Circuit (Note 2)	5 max. Megohms

Typical Operating Conditions & Performance

Anode 2 Voltage	1000	2000	2500	Volts
Anode 1 (Focus) Voltage	170 to 320	340 to 640	420 to 800	Volts
Grid 1 Spot Cutoff Voltage (Max.)	−45	−90	−112	Volts
Maximum Line Width, Center (Note 3)			0.023	Inch
			0.58	mm
Deflection Factors:				
D1 D2	28 to 38.5	56 to 77	70 to 96.2	Volts/Inch
	1.11 to 1.52	2.22 to 3.04	2.76 to 3.79	Volts/mm
D3 D4	23 to 31	46 to 62	57.5 to 77.5	Volts/Inch
	0.91 to 1.22	1.82 to 2.44	2.26 to 3.05	Volts/mm
Spot Position (Note 4)	—	—	18	mm

Notes

1. Westinghouse Military & Industrial Cathode Ray Tubes can be supplied with most of the standard JEDEC phosphors.
2. It is recommended that the deflection electrode circuit impedances be approximately equal.
3. Line width is measured by the shrinking raster method with a screen brightness of 4 fL (1.22 m-L) on a 3.5" (89mm) x 3.5" (89mm) raster.
4. With deflecting electrodes connected to anode 2, and with the tube shielded against external magnetic fields, the focused spot is within an 18mm square centered on the tube face and with sides parallel to scanning axes.

The information contained herein is supplied without assuming responsibility for infringement of patents or other rights of third parties which may result from its use. No license is granted by implication or otherwise under any patent or patent rights of Westinghouse Electric Corporation.

September 1970
Supersedes 5UP- dated January 1, 1965
TC−2236-2

Industrial & Military CRT

Type: 5UP-

5″ (127mm) Round Faceplate
Electrostatic Focus & Deflection
Line Width = 0.023″ (0.58mm)

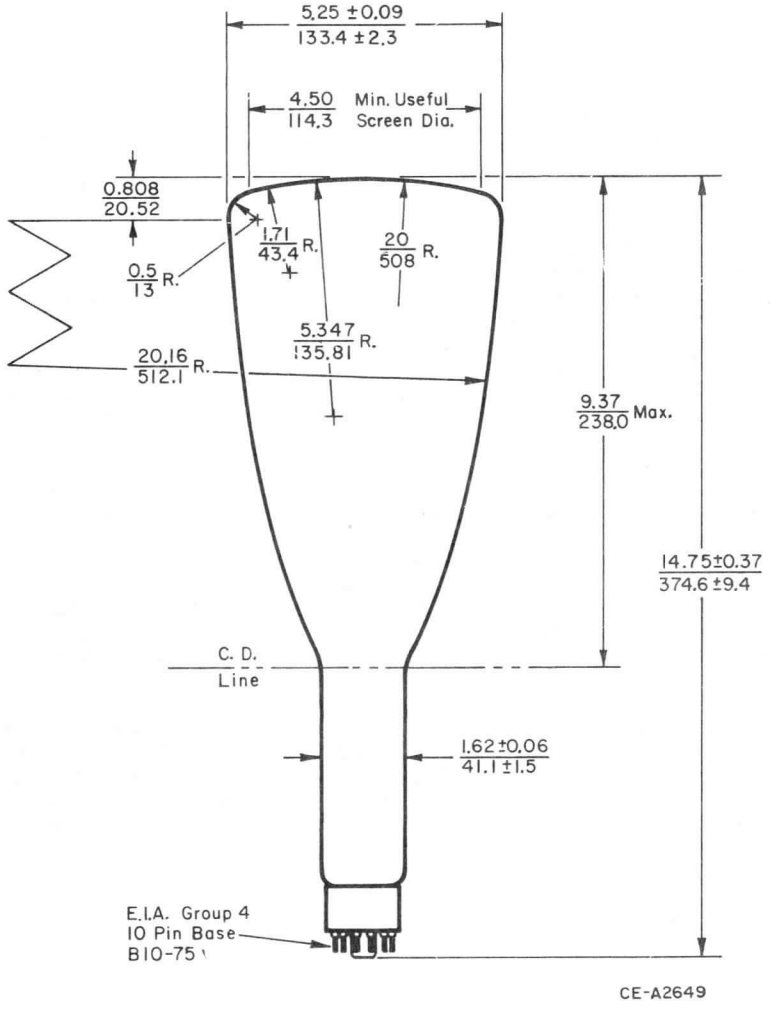

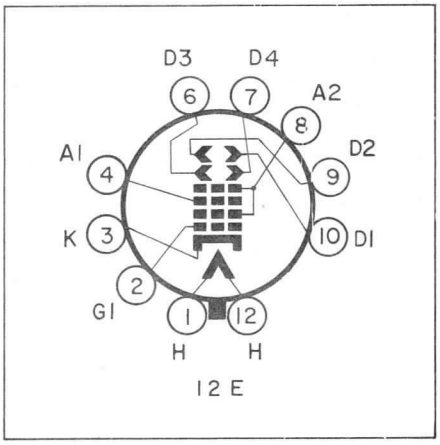

Outline Notes

A. Plane defined by pin 1 and tube axis alines with D3 - D4 trace ±10°.

B. Positive voltage on D1 deflects beam toward mid-point between pins 4 & 5.

C. Positive voltage on D3 deflects beam toward pin 1.

D. Angle between D1 D2 trace and D3 D4 trace is 90° ±1°.

(Dimensions in $\frac{\text{inches}}{\text{mm}}$ unless otherwise shown) The millimeter dimensions are derived from the original inch dimensions, 1″ = 25.4 mm exactly.

Westinghouse Electric Corporation
Electronic Tube Division, Elmira, N. Y. 14902
Printed in U.S.A.

March 15, 1962

FLYING SPOT CATHODE RAY TUBE TYPE 5ZP16

Magnetic Deflection
Electrostatic Focus

Aluminized Phosphor
High Resolution

The 5ZP16 is a high quality Cathode Ray tube designed for use as the scanner in a video signal generator.

The tube employs a high resolution electrostatic focus gun. The small deflection angle (40°) minimizes deflection defocusing. These two features give the tube high resolution capabilities.

The tube face is made of a special glass which resists deterioration under high velocity electron bombardment. It has good optical quality and flatness which will not limit the performance of the lens system necessary to provide good signal resolution.

The aluminized P16 phosphor used has a spectral energy distribution peaking in the near UV region. Its extremely short persistence requires very little equalization to minimize reproduced picture blurring and trailing. The 5ZP16 has an external conductive coating on the tube neck which is grounded to prevent corona between yoke and neck and to increase filter capacitance of the high voltage power supply. The tube also has an external insulating coating over the bulb to minimize arcing in a high humidity environment.

ELECTRICAL:

Cathode	Coated Unipotential	
Heater:		
Voltage	6.3	Volts
Current	0.60	Ampere
Direct Interelectrode Capacitances:		
Grid 1 to all other electrodes	8	μμf
Grid 2 to all other electrodes	7	μμf
Cathode to all other electrodes	5	μμf
External Conductive Neck Coating to Anode	300	μμf

SCREEN:

Phosphor	Aluminized P16
Fluorescence	Violet and near-ultraviolet
Phosphorescence	Violet and near-ultraviolet
Persistence	Extremely short
Focusing Method	Electrostatic
Deflection Method	Magnetic
Deflection Angle	40°

MECHANICAL:

Mounting Position	Any
Minimum Useful Screen Diameter	4-1/4"
Faceplate Configuration	Flat
Faceplate Glass⊕	Optical Quality
Bulb Diameter (Greatest)	5" ± 1/8"
Overall Length	14-3/8" ± 3/8"
Neck Length	9-3/4"
Base□	Small Shell 7-Pin Duodecal (JEDEC B7-51)
Bulb Contact	JEDEC J1-21
Basing	12C

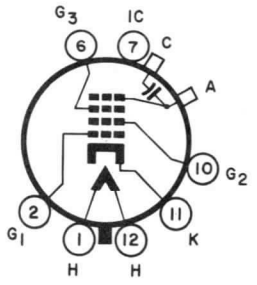

12 C

MAXIMUM RATINGS

Design Center Values

Anode Voltage	27000 max.	Volts
Grid 3 Voltage	7000 max.	Volts
Grid 2 Voltage	350 max.	Volts
Grid 1 Voltage:		
Negative Bias Value	150 max.	Volts
Negative Peak Value	200 max.	Volts
Positive Bias Value	0 max.	Volts
Positive Peak Value	0 max.	Volts
Peak Heater-Cathode Voltage:		
Heater Positive with Respect to Cathode	180 max.	Volts
Heater Negative with Respect to Cathode#	180 max.	Volts

LIMITING CIRCUIT VALUES:

Grid 1 Circuit Resistance	1.5 max.	Meg.
Grid 2 Circuit Resistance*	10000 max.	Ohms

TYPICAL OPERATING CONDITIONS

Anode Voltage♦	20000	27000	Volts
Grid 3 Voltage	4700 ± 12%	6300 ± 12%	Volts
Grid 2 Voltage	200	200	Volts
Grid 1 Voltage■	-42 to -98	-42 to -98	Volts
Anode Current▲	25	15	μamperes
Maximum Grid 3 Current for Indicated Anode Current	75	25	μamperes
Line width (At Half Amplitude of Light Energy Distribution across Line)	0.005	0.005	Inch

A peak value of 410 volts design center maximum may be applied for not more than 15 seconds during equipment warm-up periods.

♦ Brilliance and definition decrease with decreasing anode voltage. In general, anode voltage should not be less than 20000 volts. UV output is approximately 50% higher at 27KV than at 20KV. UV output decreases rapidly during first 100 hours of operation. However, subsequent decrease is very slow.

■ For visual extinction of undeflected focussed spot.

▲ Circuitry should provide for immediate cutoff of the beam in case of either horizontal or vertical scanning failure. Care should also be taken to provide for beam extinction faster than scanning collapse when equipment is turned off. Failure to prevent such excessive power input to the screen will result in serious damage or even breakage of tube.

⊕ Any marks on faceplate of tube may show in the reproduced picture. Precautions should be taken to keep face clean and free from scratches.

□ Socket contacts corresponding to vacant pins should be removed to decrease possibility of arc-over.

Protective resistance in the grid 2 circuit is advisable to prevent damage.

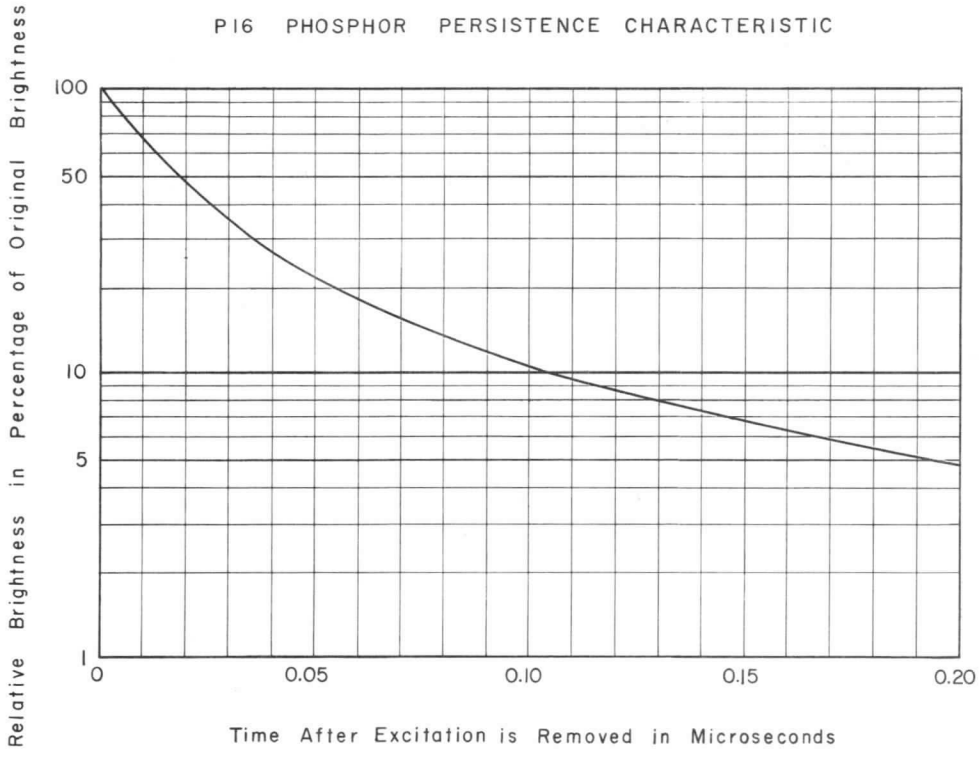

P16 PHOSPHOR

SPECTRAL ENERGY EMISSION CHARACTERISTIC

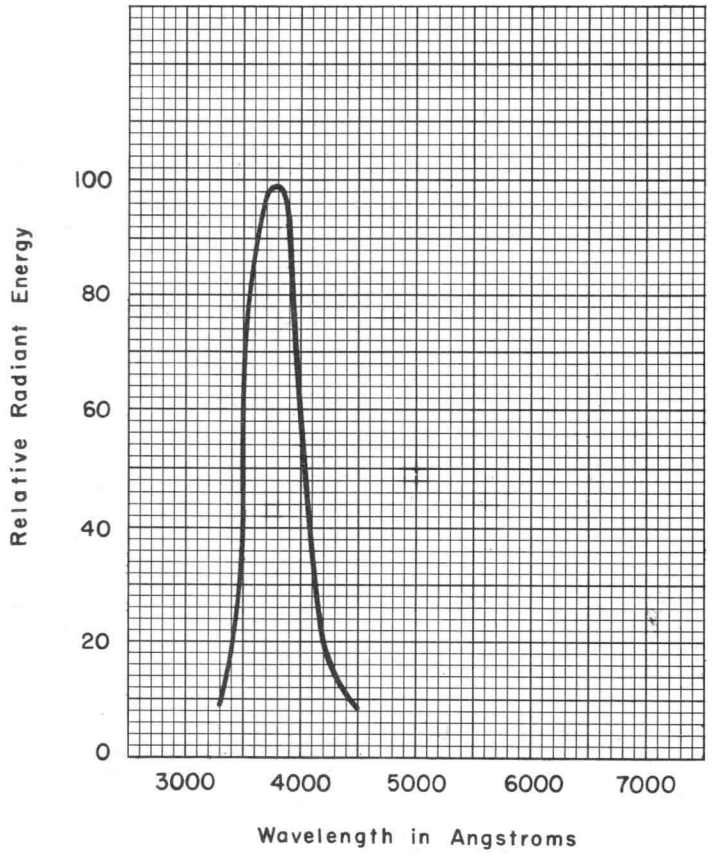

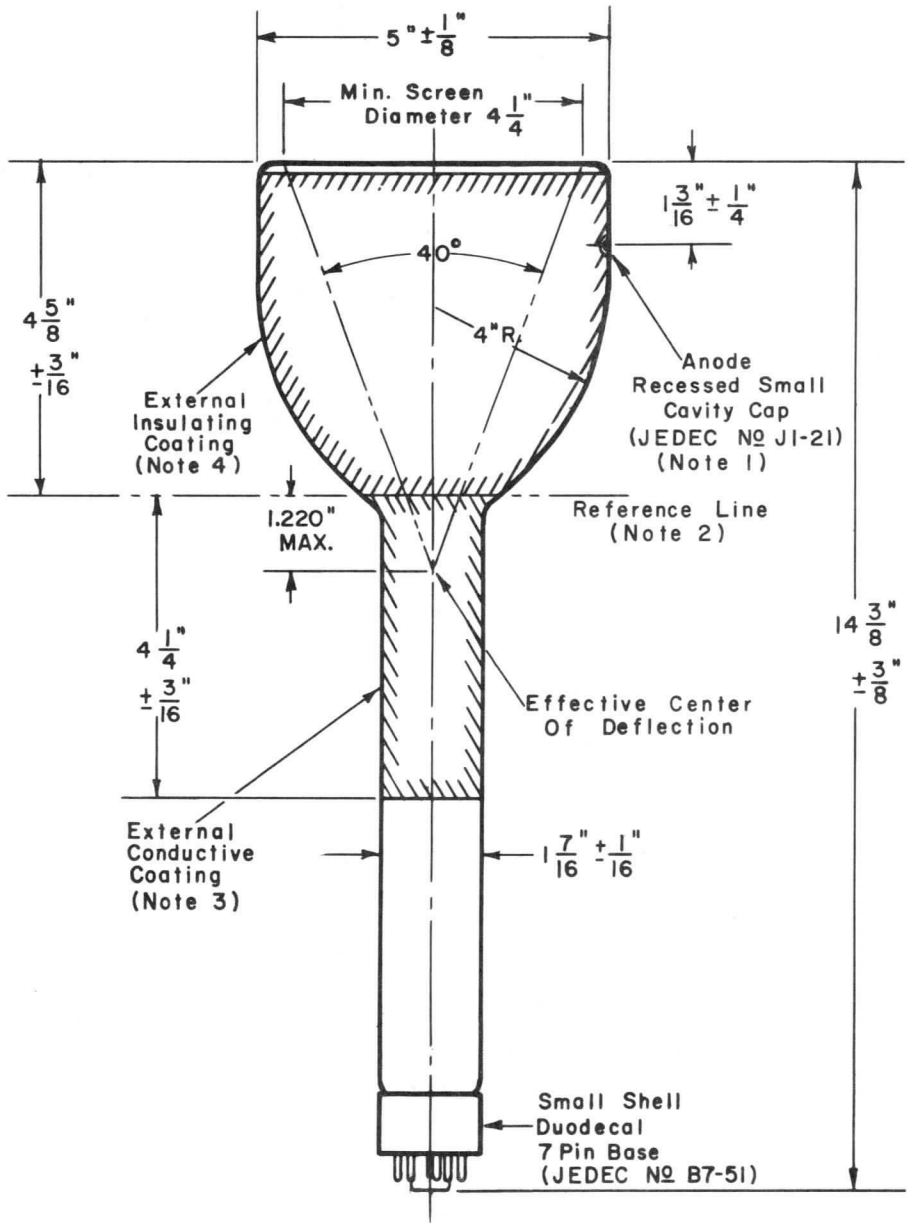

Note 1: Anode terminal alignment with vacant-pin position No. 3 has angular tolerance of ± 10° measured about tube axis.

Note 2: Reference line determined by point where gage (JEDEC #110) will stop against bulb.

Note 3: External conductive coating must be grounded. Connection may be made by use of a metal band fastened around the neck or by soft metal brush fastened to the yoke. Care must be taken to accomplish good contact, but not to clamp neck too tightly. Coating should not be scratched or washed with liquids likely to soften lacquer.

Note 4: Tube should never be handled by external insulating coating. Fingerprints (or dust) may cause electrical breakdown in humid weather. Coating should not be scratched or washed with liquids likely to soften lacquer. Since a film of dirt can nullify the insulating properties of the coating, the tube should be protected as much as practical from dust. Should washing be necessary, the following is recommended: a soapless detergent, a clean water rinse, and immediate drying.

MILITARY & INDUSTRIAL CATHODE RAY TUBE TYPE 5ZP–

Basic Characteristics
5" Round Flat Faceplate
Electrostatic Focus
40° Magnetic Deflection

Typical Applications
5ZP16– Flying-Spot Scanner
for Video Signal Generators

Special Features
0.005" Spot Diameter
Clear, Non-Browning Faceplate
Aluminized

ELECTRICAL

Cathode	Coated Unipotential
Heater:	
Voltage	6.3 Volts
Current	0.60 Ampere
Direct Interelectrode Capacitances:	
Grid 1 to all other Electrodes	8 pF
Grid 2 to all other Electrodes	7 pF
Cathode to all other Electrodes	5 pF
External Conductive Neck Coating to Anode	300 pF
Focusing Method	Electrostatic
Deflection	40° Magnetic
Micro-Deflection	Electrostatic

OPTICAL

Screen Phosphor	Note 1
Faceplate: (Note 2)	
Configuration	Flat
Glass	Clear, Non-Browning
Transmission	91%
Index of Refraction	1.52

MECHANICAL

Mounting Position	Any
Net Weight (Approx.)	1½ Pounds
Bulb	J40L1A

ABSOLUTE MAXIMUM RATINGS

Anode Voltage (Note 3)	30000 max.	Volts
Grid 3 (Focus) Voltage (Note 4)	8000 max.	Volts
Grid 2 Voltage	350 max.	Volts
Grid 1 Voltage:		
Negative Bias Value	180 max.	Volts
Positive Bias Value	.0 max.	Volts
Positive Peak Value	.0 max.	Volts
Peak Heater-Cathode Voltage:		
Heater Negative with Respect to Cathode:		
During Warm-up period of 15 Sec. Max.	410 max.	Volts
After Equipment Warm-up	180 max.	Volts
Heater Positive with Respect to Cathode	180 max.	Volts

LIMITING CIRCUIT VALUES

Grid 1 Circuit Resistance	1.5 max.	Megohms
Grid 2 Circuit Resistance	See Note 5	

TYPICAL OPERATION & PERFORMANCE

Anode Voltage (Note 6)	20000	27000	Volts
Grid 3 (Focus) Voltage	470 0 ± 12%	6300 ± 12%	Volts
Grid 2 Voltage	200	200	Volts
Grid 1 Spot Cutoff Voltage	–42 to –98	–42 to –98	Volts
Line Width with P16 (Note 7)	0.005	0.005	Inch
Spot Position (Note 8)	8	8	mm

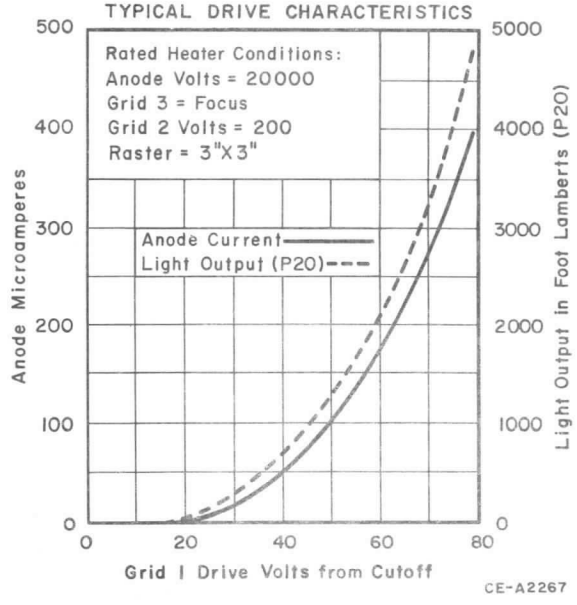

NOTES

1. Westinghouse Military & Industrial Cathode Ray Tubes can be supplied with most of the standard JEDEC phosphors.
2. Marks on the tube faceplate may show in the reproduced picture. Faceplate must be kept clean and free from scratches.
3. Operation with voltage in excess of 16 kilovolts may require shielding to limit radiation of very soft X-rays. Brilliance and definition decrease with decreasing anode voltage. In general, anode voltage should not be less than 20 kilovolts. UV output is approximately 50% higher at 27 kilovolts than at 20 kilovolts. UV output decreases rapidly during first 100 hours of operation but subsequent decrease is very slow.
4. With an anode voltage of 27 KV the grid 3 electrode may draw a peak current of 0.8 milliamperes with a representative value of 25 microamperes under normal operation. (Screen current = 15 microamperes).
5. A grid 2 circuit resistance of approximately 0.5 megohm should be provided. In addition it is recommended that a suitable device be used to limit grid 2 voltage to the maximum rated value to prevent tube damage in case of a momentary arc.

6. Circuitry should provide for immediate beam cutoff in case of either horizontal or vertical scanning failure. Care should also be taken to provide for beam extinction faster than scanning collapse when equipment is turned off. Failure to prevent such excessive power input to the screen will result in serious damage or even tube breakage.

7. Line width is defined as the distance between the half-amplitude points of the light-energy distribution of the line and is measured with a peak current of 30 microamperes, using the slit-scan technique described in Westinghouse reprint #5510. Line width with other phosphors may vary slightly. Dynamic focus modulation is necessary to maintain optimum resolution over entire face. Close control of supply regulation and ripple is necessary to ensure optimum focus. Typically, a 0.1% change in focus or anode voltage, from best value, will increase spot size approximately 10%.

8. With the tube shielded against external magnetic fields, the undeflected focused spot lies within a circle of 8 mm radius concentric with the faceplate.

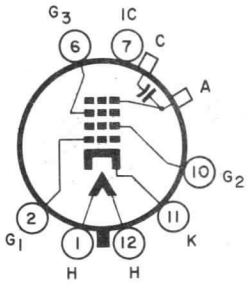

12 C

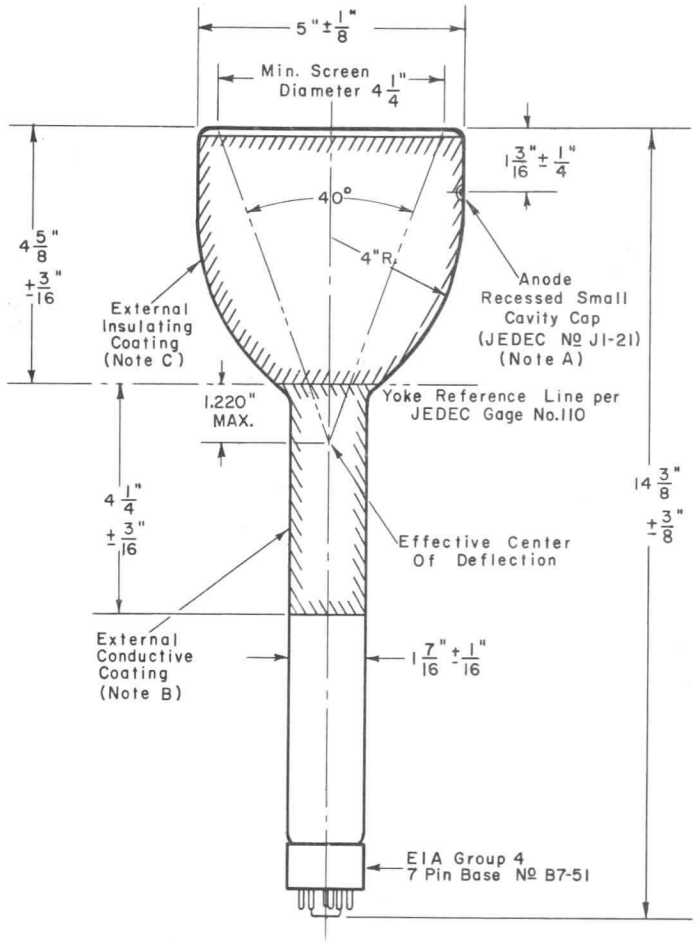

CE-AI640 RI

A. The plane defined by the tube axis and pin position 3 will be within 10° of the plane defined by the tube axis and the anode.

B. External conductive coating must be grounded. Connection may be made by use of a metal band fastened around the neck or by soft metal brush fastened to the yoke. Care must be taken to accomplish good contact, but not to clamp neck too tightly. Coating should not be scratched or washed with liquids likely to soften lacquer.

C. Tube should never be handled by external insulating coating. Fingerprints (or dust) may cause electrical breakdown in humid weather. Coating should not be scratched or washed with liquids likely to soften lacquer. Since a film of dirt can nullify the insulating properties of the coating, the tube should be protected as much as practical from dust. Should washing be necessary, the following is recommended: a soapless detergent, a clean water rinse, and immediate drying.

The information contained herein is supplied without assuming responsibility for infringement of patents or other rights of third parties which may result from its use. No license is granted by implication or otherwise under any patent or patent rights of Westinghouse Electric Corporation.

DISPLAY TUBE TYPES 7ABP4, 7ABP7, 7ABP14 AND 7ABP25

The 7ABP4, 7ABP7, 7ABP14 and 7ABP25 are electrostatic focus and magnetic deflection cathode ray tubes used for radar and oscillographic applications. They feature low voltage electrostatic focus with high definition.

ELECTRICAL:

Cathode				Coated Unipotential
Heater:				
Voltage			6.3	Volts
Current			0.60	Ampere
Direct Interelectrode Capacitances:				
Grid 1 to All Other Electrodes			6	μμf
Cathode to All Other Electrodes			5	μμf
Screen:				
Phosphor	P4	P7	P14	P25
Fluorescence	White	Blue	Blue	Orange
Phosphorescence	White	Yellow	Orange	Orange
Persistence	Short	Long	Medium Long	Very Long
Focusing Method				Electrostatic
Deflection Method				Magnetic
Deflection Angle (Approx.)				50°

MECHANICAL:

Overall Length	13-1/4" ± 1/4"
Greatest Bulb Diameter	7-3/16" ± 1/8"
Min. Useful Screen Diameter	6"
Bulb (ASA Designation or Equivalent)	J57-1/2 C or J57-1/2 D
Faceplate Configuration	Spherical
Glass	Clear
Bulb Contact	JEDEC J1-21
Base	JEDEC B6-63
Basing	12M
Mounting Position	Any
Net Weight	4 Pounds
Shipping Weight	6 Pounds

MAXIMUM RATINGS:

Design Center Values♦

Anode Voltage■	10000	max.	Volts
Anode Input★	6	max.	Watts
Focusing Electrode Voltage:			
Positive Value	1000	max.	Volts
Negative Value	500	max.	Volts
Grid 2 Voltage	700	max.	Volts
Grid 1 Voltage:			
Negative Bias Value	180	max.	Volts
Positive Bias Value	0	max.	Volts
Positive Peak Value	2	max.	Volts
Peak Heater-Cathode Voltage:			
Heater Negative With Respect to Cathode	180	max.	Volts
Heater Positive With Respect to Cathode	180	max.	Volts

TYPICAL OPERATING CONDITIONS:

Anode Voltage⊕	7000	Volts
Focusing Electrode Voltage	0 to 250	Volts
Focusing Electrode Current	−15 to +15	Microamperes
Grid 2 Voltage	300	Volts
Grid 1 Voltage▲	−33 to −77	Volts
Maximum Line Width♦	0.012	Inch
Spot Position §	3/8	Inch

MAXIMUM CIRCUIT VALUE:

Grid 1 Circuit Resistance	1.5	max.	Megohms

♦ The maximum ratings provide a ten percent safty factor in accordance with the standard design center system of rating cathode ray tubes. The tube will withstand the combined effects of variations in line voltage and components provided the maximum design center values are not exceeded by 10 percent.

■ Anode, grid 3 and grid 5 are internally connected and are referred to herein as anode.

★ Anode input equals the product of anode voltage and average current measured at the anode terminal.

⊕ Brightness and focus quality decrease with decreasing anode voltage. In general, the anode voltage should not be less than 5,000 volts.

▲ For visual extinction of undeflected focused spot.

♦ Measured in accordance with Mil-E-1B paragraph 4.12.6.2, at an anode current of 100 microamperes.

§ The center of the undeflected unfocused spot will fall within a circle of 3/8 inches radius concentric with the tube face.

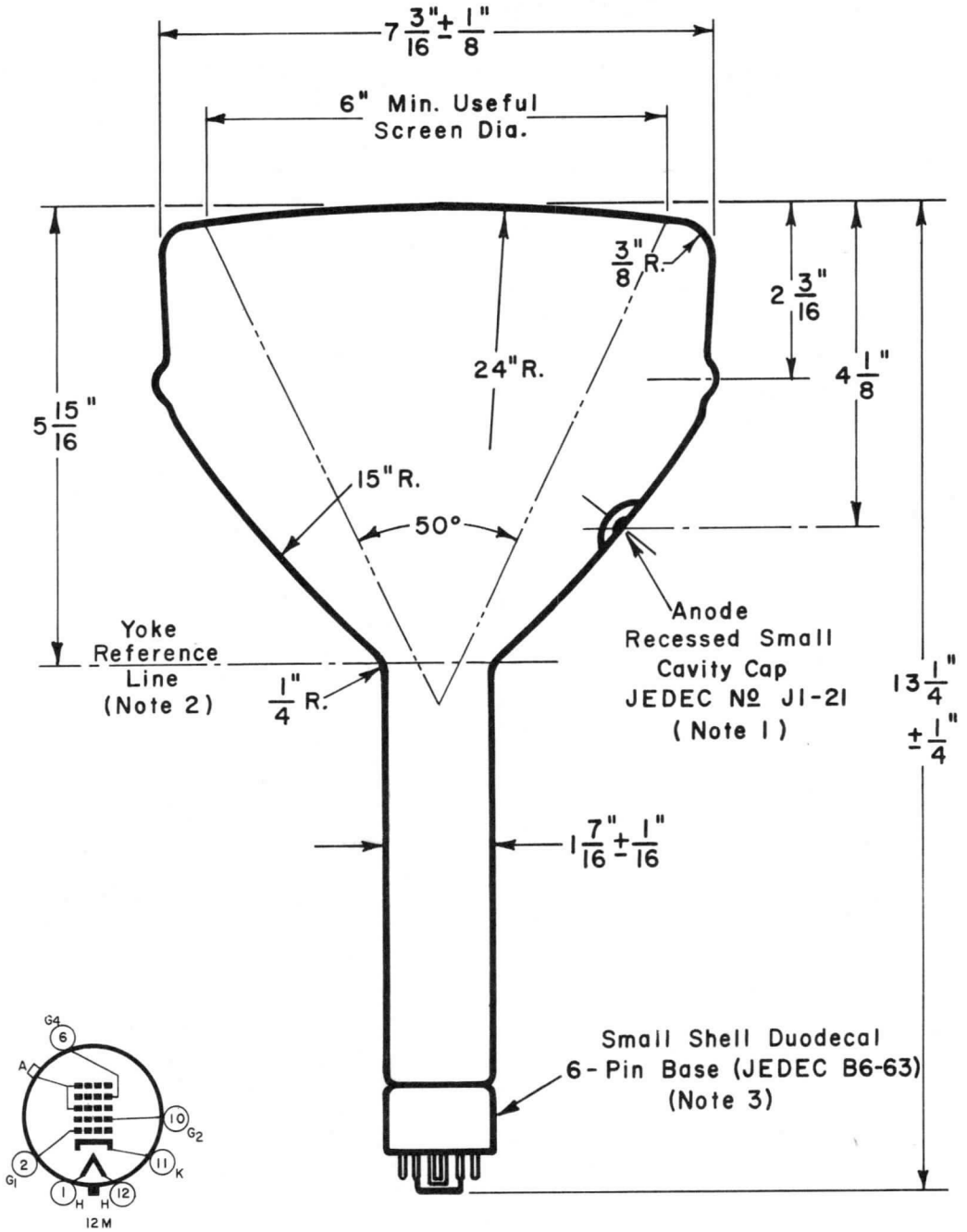

Note 1: Anode terminal alignment with base pin 3 has angular tolerance about tube axis of ± 10°.

Note 2: Yoke Reference Line is determined by plane surface of flared end of JEDEC Reference-Line Gauge No. 112 when seated on tube funnel.

Note 3: The socket should not be rigidly mounted but should be allowed to move freely on flexible leads.

RADAR DISPLAY TUBE TYPE 7AUP4

The 7AUP4 is a 7" diameter, electrostatic focus, magnetic deflection display tube featuring a small (7/8") diameter neck for decreased deflection power. The tube is short, compact and light weight and is suitable for radar display or monitor application. The screen is aluminized for increased brightness.

ELECTRICAL

Cathode	Coated Unipotential
Heater:	
Voltage	6.3 Volts
Current	0.30 Ampere
Direct Interelectrode Capacitances:	
Grid 1 to All Other Electrodes	9.0 $\mu\mu$f
Grid 2 to All Other Electrodes	7.0 $\mu\mu$f
Cathode to All Other Electrodes	7.0 $\mu\mu$f
Focusing Method	Low-Voltage Electrostatic
Deflection Method	Magnetic
Deflection Angle	70°

OPTICAL

Faceplate Configuration	Spherical
Faceplate Glass	Clear
Screen:	
Phosphor	Aluminized P4
Fluorescence	White
Phosphorescence	White
Persistence	Short

MECHANICAL

Mounting Position	Any
Useful Screen Diameter (Minimum)	6"
Bulb Diameter	7" ± 1/16"
Overall Length	8-1/4" ± 1/4"
Anode Terminal	JEDEC J1-22
Base (Note 1)	JEDEC E9-37
Basing	9HT

MAXIMUM RATINGS

Design Center Values

Anode Voltage	10000	max.	Volts
Grid 4 Voltage (Focus)	1000	max.	Volts
Grid 2 Voltage	700	max.	Volts
Grid 1 Voltage:			
Negative Bias Value	140	max.	Volts
Positive Bias Value	0	max.	Volts
Positive Peak Value	0	max.	Volts
Peak Heater-Cathode Voltage:			
Heater Negative with Respect to Cathode:			
During Warm-up Period (15 Seconds Max.)	410	max.	Volts
After Equipment Warm-up	180	max.	Volts
Heater Positive with Respect to Cathode	180	max.	Volts

LIMITING CIRCUIT VALUES

Grid 1 Circuit Resistance	1.5	max.	Megohms
Grid 2 Circuit Resistance (Note 2)	10000	max.	Ohms
Grid 4 Circuit Resistance (Note 2)	10000	max.	Ohms

TYPICAL OPERATING CONDITIONS

Anode Voltage	8000	Volts
Grid 4 Voltage (Note 3)	0 to 300	Volts
Grid 2 Voltage	300	Volts
Grid 1 Voltage for Spot Cutoff	–25 to –60	Volts
Line Width (Note 4)	0.012	Inch

NOTES

1. A socket with a center opening to clear the tubulation should be used. Care should be exercised to avoid damage to the tubulation.
2. Protective resistance in the Grid 2 and Grid 4 (Focus) circuits is advisable to prevent damage to the tube.
3. With combined Grid 1 Bias Voltage and Video-Signal Voltage adjusted to give an anode current of 50 microamperes on a 6" × 6" raster.
4. With an anode current of 50 microamperes, typical line width at center of faceplate, using half amplitude points of light energy distribution of a single line, is 0.012".

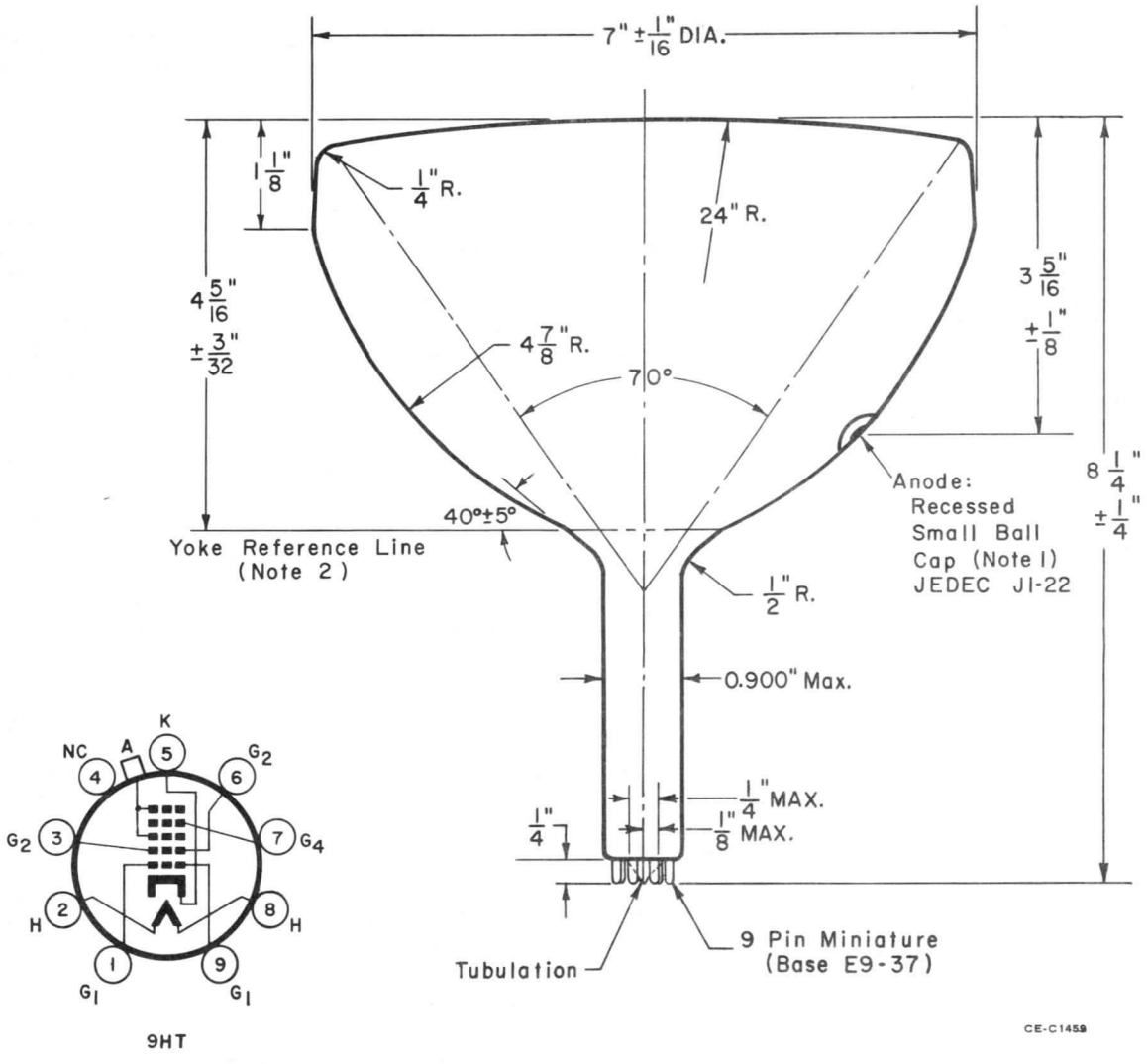

9HT

NOTE 1: Anode button has radial alignment about tube axis with space between base pins 1 & 9.
NOTE 2: Reference Line is determined by the point where the leading edge of JEDEC Gauge No. 141 will stop.

The information contained herein is supplied without assuming responsibility for infringement of patents or other rights of third parties which may result from its use. No license is granted by implication or otherwise under any patent or patent rights of Westinghouse Electric Corporation.

June 1, 1965

MILITARY & INDUSTRIAL CATHODE RAY TUBE TYPE 7AUP–

Basic Characteristics

7" Round, Spherical Faceplate
Electrostatic Focus
70° Magnetic Deflection
Aluminized

Typical Applications

Monitor
Radar Display

Special Features

7/8" Neck Dia. for Low Deflection Power
Spot Diameter 0.012"
Light Weight & Compact

ELECTRICAL

Cathode	Coated Unipotential	
Heater:		
Voltage	6.3	Volts
Current	0.30	Ampere
Direct Interelectrode Capacitances:		
Grid 1 to All Other Electrodes	9	pF
Grid 2 to All Other Electrodes	7	pF
Cathode to All Other Electrodes	7	pF
Focusing Method	Low Voltage Electrostatic	
Deflection	70° Magnetic	

OPTICAL

Screen Phosphor	Note 1	
Faceplate:		
Configuration	Spherical	
Glass	Clear	
Transmission	92%	
Index of Refraction	1.51	

MECHANICAL

Mounting Position	Any	
Net Weight (Approx.)	2-1/4	Pounds

ABSOLUTE MAXIMUM RATINGS

Anode Voltage	10000	max.	Volts
Grid 4 (Focus) Voltage	1000	max.	Volts
Grid 2 Voltage	700	max.	Volts
Grid 1 Voltage:			
Negative Bias Value	180	max.	Volts
Positive Bias Value	0	max.	Volts
Positive Peak Value	0	max.	Volts
Peak Heater-Cathode Voltage:			
Heater Negative with Respect to Cathode:			
During Warm-up Period of 15 Sec. Max.	410	max.	Volts
After Equipment Warm Up	180	max.	Volts
Heater Positive with Respect to Cathode	180	max.	Volts

LIMITING CIRCUIT VALUES

Grid 1 Circuit Resistance	1.5	max.	Megohms
Grid 2 Circuit Resistance (Approx.)	0.5	–	Megohms
Grid 4 (Focus) Circuit Resistance	10000	min.	Ohms

TYPICAL OPERATION & PERFORMANCE

Anode 1 Voltage	8000	Volts
Grid 4 (Focus) Voltage	0 to 300	Volts
Grid 2 Voltage	300	Volts
Grid 1 Spot Cutoff Voltage	–25 to –60	Volts
Spot Diameter with P4 (Note 2)	0.012	Inch
Spot Position (Note 3)	6	mm

TYPICAL DRIVE CHARACTERISTICS

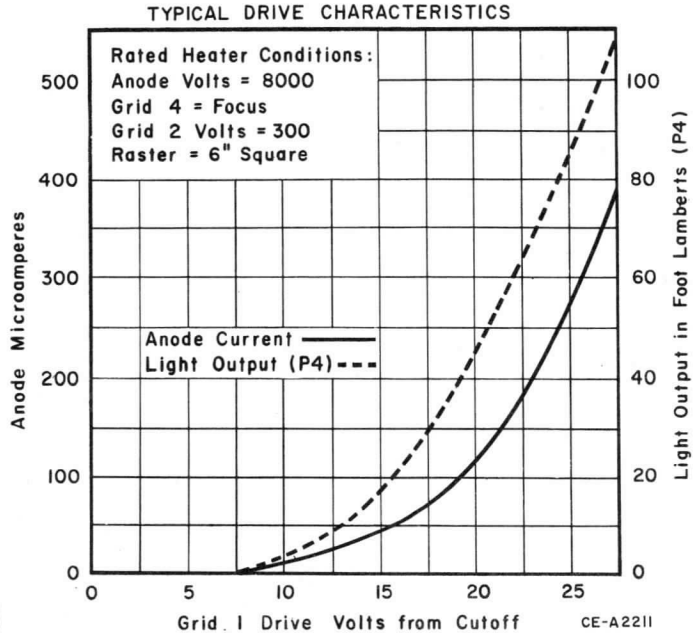

NOTES

1. Westinghouse Military & Industrial Cathode Ray Tubes can be supplied with most of the standard JEDEC phosphors.
2. Spot diameter equals line width and is measured by the shrinking raster method with a peak current of 50 microamperes.
3. With the tube shielded against external magnetic fields, the undeflected focused spot lies within a circle of 6 mm radius concentric with the faceplate.

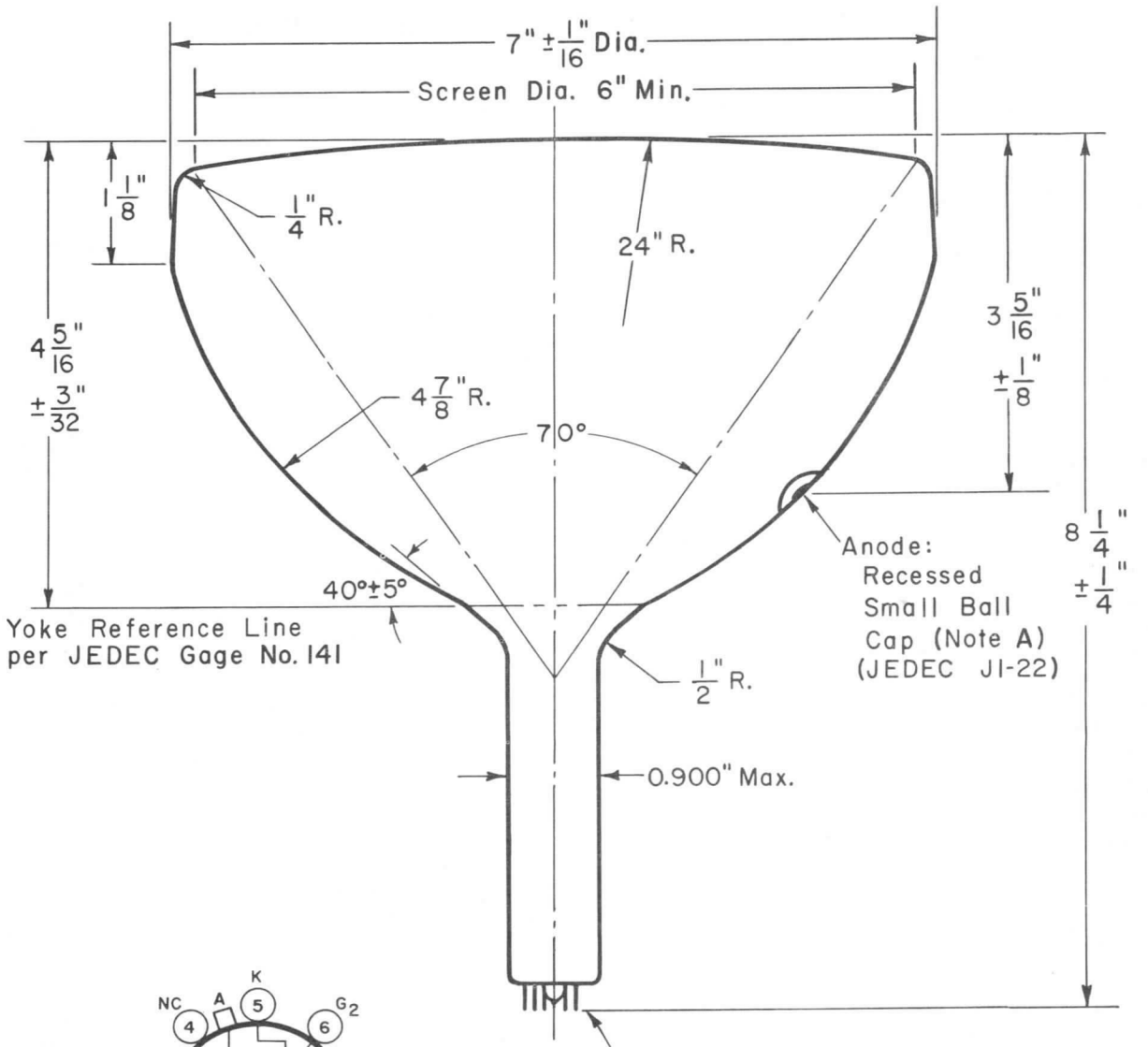

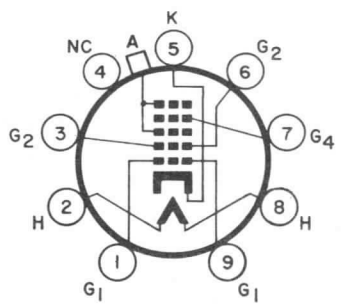

9HT

A. The plane defined by the tube axis and the anode will be within the planes defined by the tube axis and pins 1 and 9.

B. A socket with a center opening to clear the tubulation should be used. Care should be taken to avoid damage to the tubulation.

The information contained herein is supplied without assuming responsibility for infringement of patents or other rights of third parties which may result from its use. No license is granted by implication or otherwise under any patent or patent rights of Westinghouse Electric Corporation.

RADAR DISPLAY TUBE TYPES 7BP7A AND 7BP7B

The 7BP7A is a magnetic deflection and focus radar display tube. The clear glass bulb has a cascade long persistence screen. It is used for oscillographic application where a record of low-speed non-recurring phenomena or high-speed recurring phenomena is required.

The 7BP7B has a gun structure which gives an improved spot shape resulting in a high-resolution tube.

ELECTRICAL:

Coated	Coated Unipotential
Heater:	
Voltage	6.3 Volts
Current	0.6 ± 10% Ampere
Direct Interelectrode Capacitance:	
Grid 1 to All Other Electrodes	8.0 $\mu\mu$f
Cathode to All Other Electrodes	5.0 $\mu\mu$f
Screen:	
Phosphor	P7
Fluorescence	Blue
Phosphorescence	Yellow
Persistence	Long
Focusing Method	Magnetic
Deflection Method	Magnetic
Deflection Angle	53°

MECHANICAL:

Mounting Position	Any
Useful Diameter	6"
Greatest Bulb Diameter	7" ± 1/8"
Overall Length	13-1/4" ± 3/8"
Faceplate	Spherical
Glass	Clear
Net Weight	2-1/2 Pounds
Shipping Weight	3-1/2 Pounds
Bulb Number	J56R or J56T
Bulb Contact	JEDEC J1-22
Base	Long Medium Shell Octal 8-Pin (JEDEC B8-65)
Basing	5AN

MAXIMUM RATINGS:

Design Center Values

Anode Voltage	8000	max.	Volts
Anode Input	6	max.	Watts
Grid 2 Voltage	700	max.	Volts
Grid 1 Voltage:			
Negative Bias Value	180	max.	Volts
Positive Bias Value	0	max.	Volts
Positive Peak Value	2	max.	Volts
Peak Grid 1 Drive from Cutoff	65	max.	Volts
Peak Heater-Cathode Voltage:			
Heater Negative with Respect to Cathode During Warm-up Period of 15 seconds max.	410	max.	Volts
After Equipment Warm-up	180	max.	Volts
Heater Positive with Respect to Cathode	180	max.	Volts

TYPICAL OPERATING CONDITIONS

Anode Voltage⊕	4000	7000	Volts
Grid 2 Voltage	250	250	Volts
Grid 1 Voltage §	−25 to −70	−25 to −70	Volts
Focusing Coil Current	75 to 102	99 to 135	Ma.
Line Width■		0.28	mm
Spot Position▲		12	mm

MAXIMUM CIRCUIT VALUES:

Grid 1 Circuit Resistance	1.5 Megohm

⊕ It is recommended that the 7BP7B be operated at an anode voltage of 7000 volts, The anode and grid 3 are connected within the tube and referred to herein as anode.

■ The line width of the 7BP7A is slightly larger. The 7BP7B is measured in accordance with Mil-E-1D paragraph 4.12.6.2. at an anode current of 200 microamperes.

▲ The center of the undeflected, unfocused spot will fall within a circle of 12 millimeters radius concentric with the tube face.

§ For visual extinction of undeflected focused spot.

Commercial Outline

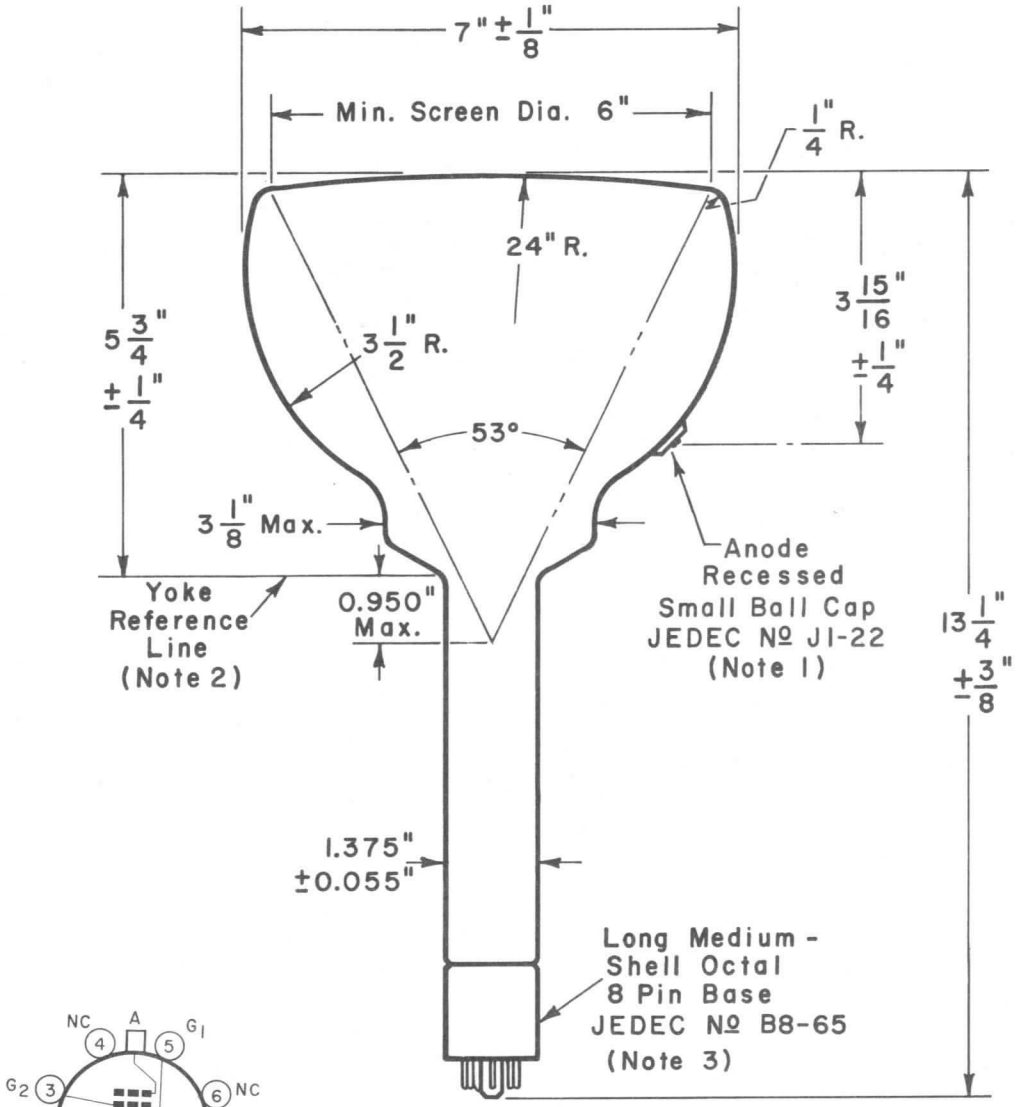

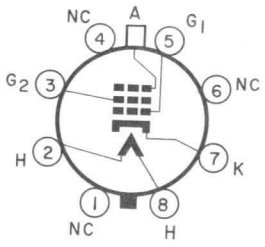

5AN

Note 1: Anode terminal alignment with base pin 5 has angular tolerance about tube axis of ± 30°.

Note 2: Yoke Reference Line is determined by plane surface of gauge 1.430" + 0.003" –0.000" I. D. and 2" long when resting on bulb cone.

Note 3: The socket should not be mounted rigidly but should be allowed to move freely on flexible leads

September 15, 1965

7MP7 OSCILLOGRAPHIC TUBE

The 7MP7 is a 7 inch magnetic-focus and deflection cathode ray tube. The tube utilizes a limiting aperture which produces a sharp round spot on the screen at higher beam currents. The bulb has a relatively flat face plate made from clear glass.

ELECTRICAL:

Cathode	Coated Unipotential	
Heater:		
Voltage	6.3	Volts
Current	0.6 ± 10%	Ampere
Direct Interelectrode Capacitances:		
Grid 1 to All Other Electrodes	6	μμf
Cathode to All Other Electrodes	5	μμf
Focusing Method	Magnetic	
Deflection Method	Magnetic	
Deflection Angle	53°	
Screen:		
Phosphor	P7	
Flourescence	Blue	
Phosphorescence	Yellow	
Persistence	Long	

MECHANICAL:

Mounting Position	Any
Min. Useful Screen Diameter	6"
Greatest Diameter of Bulb	7-3/16" ± 1/8"
Overall Length	12-3/4" ± 3/8"
Bulb Number	J57-1/2C1
Bulb Contact	JEDEC J1-21
Base	Small Shell Duodecal –5 Pin (JEDEC B 5-57)
Basing	12D
Glass	Clear
Faceplate	Spherical
Net Weight	3.5 Pounds
Shipping Weight	5.0 Pounds

MAXIMUM RATINGS:

'Design Center Values

Anode Voltage	8000	max.	Volts
Anode Input	6	max.	Watts
Grid 2 Voltage	700	max.	Volts
Grid 1 Voltage:			
Negative Bias Value	180	max.	Volts
Positive Bias Value	0	max.	Volts
Positive Peak Value	2	max.	Volts
Peak Grid 1 Drive from Curoff	65	max.	Volts
Peak Heater-Cathode Voltage			
Heater Negative with Respect to Cathode			
During Warm-up Period 15 seconds max.	410	max.	Volts
After Warm-up	180	max.	Volts
Heater Positive with Respect to Cathode	180	max.	Volts

MAXIMUM CIRCUIT VALUES:

Grid No. 1 Circuit Resistance	1.5	max.	Megohms

TYPICAL OPERATING CONDITIONS:

Anode Voltage	7000	Volts
Grid 2 Voltage	250	Volts
Grid 1 Voltage⊕	–27 to –63	Volts
Grid 2 Current	–15 to + 15	μamperes
Spot Position□	12	mm

⊕ For visual extinction of undeflected focused spot.

□ The center of the undeflected unfocused spot will fall within a 12 millimeter circle concentric with the tube faceplate.

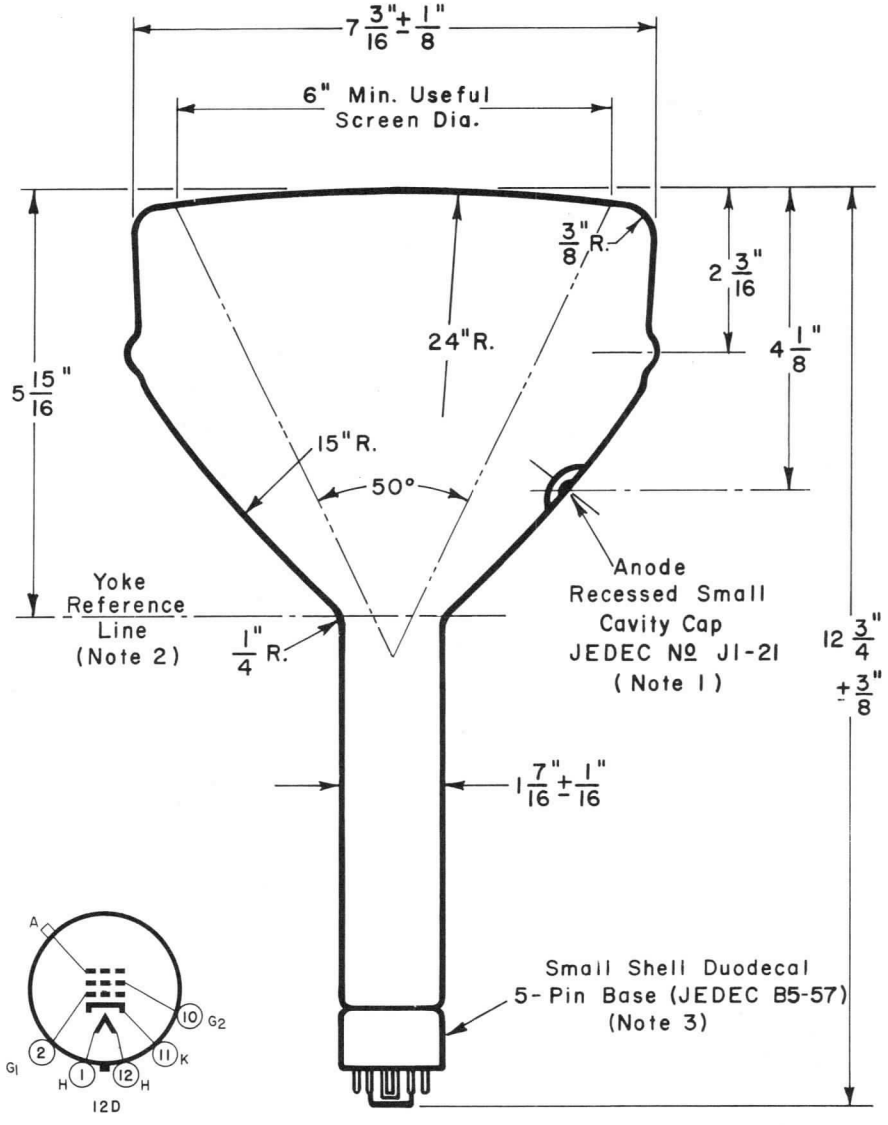

Note 1: Anode terminal alignment with base pin position 3 has angular tolerance about tube axis of ± 10°.

Note 2: Yoke Reference Line is determined by Plane surface of flared end of JEDEC Reference-Line Gauge No. 112 when seated on tube funnel.

Note 3: The socket should not be rigidly mounted but should be allowed to move freely on flexible leads.

The information contained herein is supplied without assuming responsibility for infringement of patents or other rights of third parties which **may result from its use.** No license is granted by implication or otherwise under any patent or patent rights of Westinghouse Electric Corporation.

MONITOR DISPLAY TUBE TYPE 7TP4

The 7TP4 is an electrostatic focus, magnetic deflection round glass tube used as a monitor tube in industrial and studio television installations. It has a picture size 5-3/8" × 4" within the minimum-useful-screen area.

This tube uses an electron gun with an acceleration type electron lens which provides high resolution and good focus uniformity over the entire picture area. The type lens used assures constant focus despite variations in line voltage and brightness.

The 7TP4 has an aluminized screen to increase contrast, improve brightness, and eliminate need for an ion trap.

ELECTRICAL:

Cathode	Coated Unipotential
Heater:	
Voltage	6.3 Volts
Current	0.60 Ampere
Direct Interelectrode Capacitances:	
Grid 1 to all other Electrodes	6 μμf
Cathode to all other Electrodes	5 μμf
Screen:	
Phosphor	Aluminized P4
Fluorescence	White
Phosphorescence	White
Persistance	Short
Focusing Method	Electrostatic
Deflection Method	Magnetic
Deflection Angle	50°

MECHANICAL:

Mounting Position	Any
Min. Screen Diameter	6"
Faceplate:	
Configuration	Spherical
Glass	Clear
Bulb Diameter	7-3/16" ± 1/8"
Overall Length	13-1/8" ± 3/8"
Weight (approx.)	2 Pounds
Base	Small Shell Duodecal 6-Pin (JEDEC B6-63)
Basing	12M

MAXIMUM RATINGS:

Design Center Values

Anode Voltage	12000 max.	Volts
Grid 3 Voltage	3000 max.	Volts
Grid 2 Voltage	410 max.	Volts
Grid 1 Voltage:		
Negative Bias Value	125 max.	Volts
Positive Bias Value♦	0 max.	Volts
Positive Peak Value	2 max.	Volts
Peak Hecter Cathode Voltage		
Heater Negative with respect to Cathode:		
During Warm-up Period of 15 seconds	410 max.	Volts
After Equipment Warm-up	180 max.	Volts
Heater Positive with respect to Cathode	180 max.	Volts

TYPICAL OPERATING CONDITIONS:

Anode Voltage†	12000	Volts
Grid 3 Voltage (For Focus with Anode Current of 100 microamperes) (10.4% to 14% of Anode Voltage)	1250 to 1700	Volts
Grid 3 Current (For Focus with Anode Current of 200 microamperes) (max.)▲	85	μamperes
Grid 2 Voltage	200	Volts
Grid 1 Spot Cutoff Voltage	−23 to −53	Volts

LIMITING CIRCUIT VALUES:

Grid 1 Circuit Resistance	1.5 max.	Megohms
Grid 2 Circuit Resistance	0.1 min.	Megohms

† Brilliance and definition decrease with decreasing anode voltage. In general, anode voltage should not be less than 10000 volts.

♦ At or near this rating, the effective resistance of the anode supply should be adequate to limit the anode input power to 6 watts.

▲ Grid 3 current increases as the anode voltage is decreased.

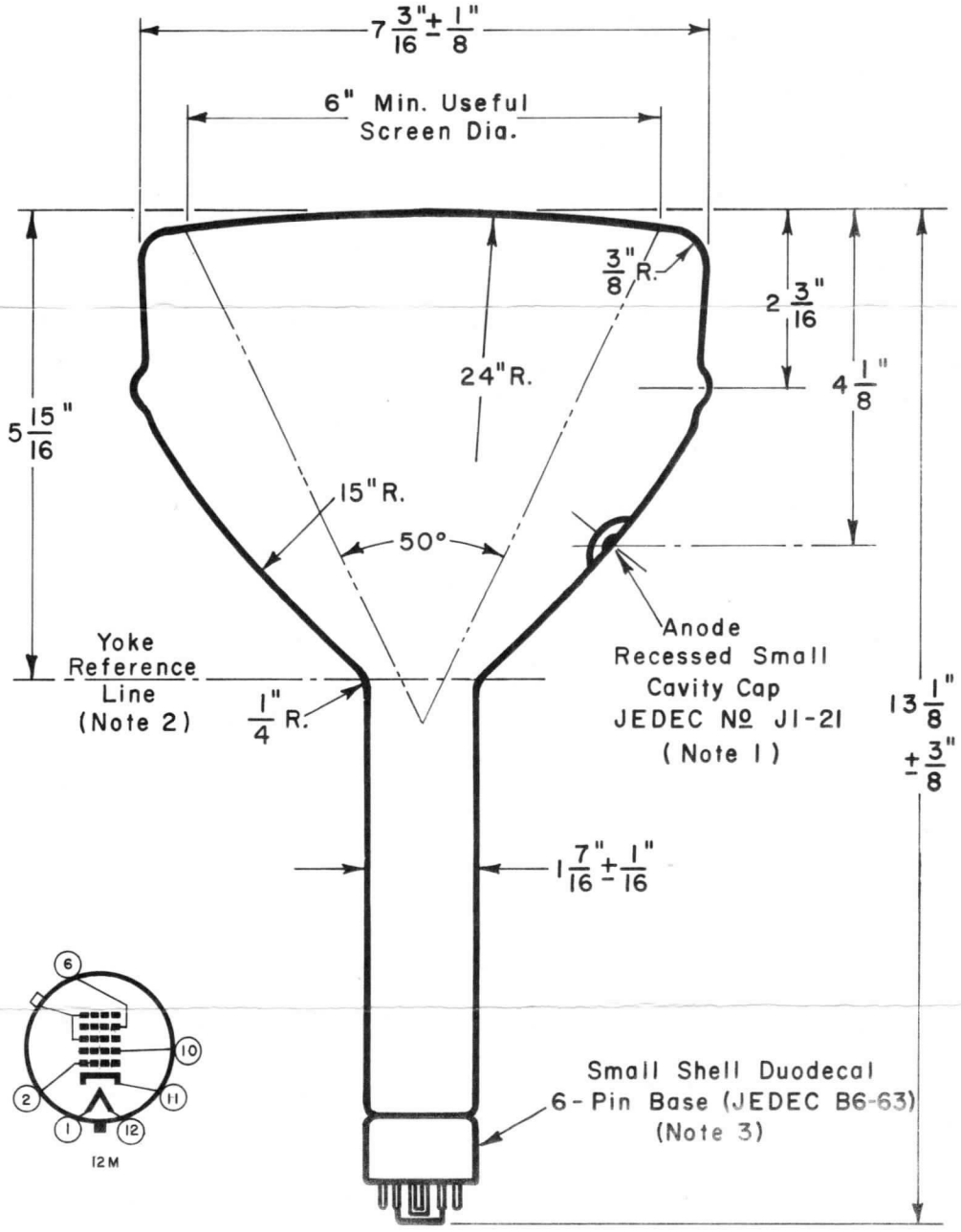

Note 1: Anode terminal alignment with base pin No. 6 has angular tolerance about tube axis of ± 30°.

Note 2: Yoke Reference Line is determined by plane surface of flared end of JEDEC Reference-Line Gauge No. 112 when seated on tube funnel.

Note 3: The socket should not be rigidly mounted but should be allowed to move freely on flexible leads.

MILITARY & INDUSTRIAL CATHODE RAY TUBE TYPE 7VP–

Basic Characteristics	Typical Applications	Special Features
7" Round Spherical Faceplate Electrostatic Focus Electrostatic Deflection	Oscillographic	High Deflection Sensitivity

ELECTRICAL

Cathode	Coated Unipotential
Heater:	
Voltage	6.3 Volts
Current	0.6 Ampere
Direct Interelectrode Capacitances:	
Grid 1 to all other Electrodes	7 pF
Cathode to all other Electrodes	4.5 pF
D1 to D2	3 pF
D3 to D4	2.5 pF
D1 to all other Electrodes	9 pF
D2 to all other Electrodes	9 pF
D3 to all other Electrodes	7 pF
D4 to all other Electrodes	7 pF
Focusing Method	Electrostatic
Deflection	Electrostatic

OPTICAL

Screen Phosphor	Note 1
Faceplate:	
Configuration	Spherical
Glass	Clear
Transmission	90%

MECHANICAL

Mounting Position	Any
Net Weight (Approx.)	3 Pounds
Bulb	J56H1

TYPICAL DRIVE CHARACTERISTICS

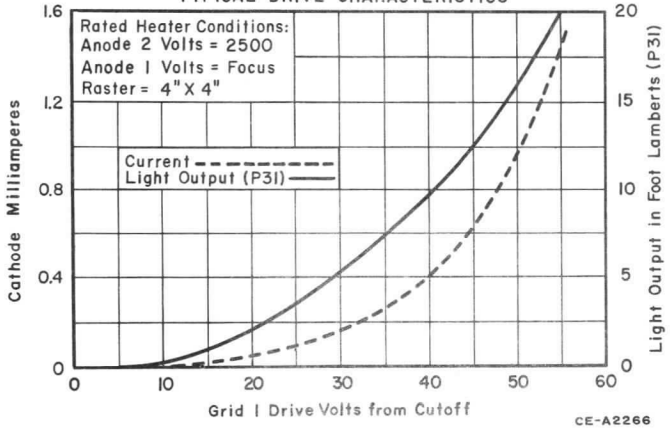

ABSOLUTE MAXIMUM RATINGS

Anode 2 Voltage	4800 max. Volts
Anode 1 (Focus) Voltage	2400 max. Volts
Grid 1 Voltage:	
Negative Bias Value	180 max. Volts
Positive Bias Value	0 max. Volts
Positive Peak Value	0 max. Volts
Peak Heater-Cathode Voltage:	
Heater Negative with Respect to Cathode:	
During warm-up period of 15 sec. max.	410 max. Volts
After Equipment Warm up	180 max. Volts
Heater Positive with Respect to Cathode	180 max. Volts
Peak Voltage between Anode and any Deflection Electrode	750 max. Volts

LIMITING CIRCUIT VALUES

Grid 1 Circuit Resistance	1.5 max. Megohms
Deflection Electrode Circuit Resistance (Note 2)	5 max. Megohms

TYPICAL OPERATION & PERFORMANCE

Anode 2 Voltage	2500 Volts
Anode 1 (Focus) Voltage	670 to 1000 Volts
Grid 1 Spot Cutoff Voltage (Max.)	–70 Volts
Line Width with P31 (Note 3)	0.040 Inch
Deflection Factors:	
D1 D2	77 to 102 V/Inch
D3 D4	62 to 85 V/Inch
Deflection Factor Uniformity (Note 4) (Max.)	3 %
Spot Position (Note 6)	20 mm

NOTES

1. Westinghouse Military & Industrial Cathode Ray Tubes can be supplied with most of the standard JEDEC phosphors.
2. Deflecting-electrode circuit resistances should be approximately equal.
3. Measured in accordance with MIL-E-1 specifications at IB2=300μA.
4. The deflection factor (for both D1 D2 and D3 D4 plate pairs separately) for any deflection of less than 75% of the useful scan, will not differ from the deflection factor at 25% of the useful scan by more than 3%.
5. Magnetic shielding must be used for optimum performance.
6. With deflecting electrodes connected to anode 2, and with the tube shielded against external magnetic fields, the focused spot is within a 20 mm square centered on the tube face and with sides parallel to scanning axes.

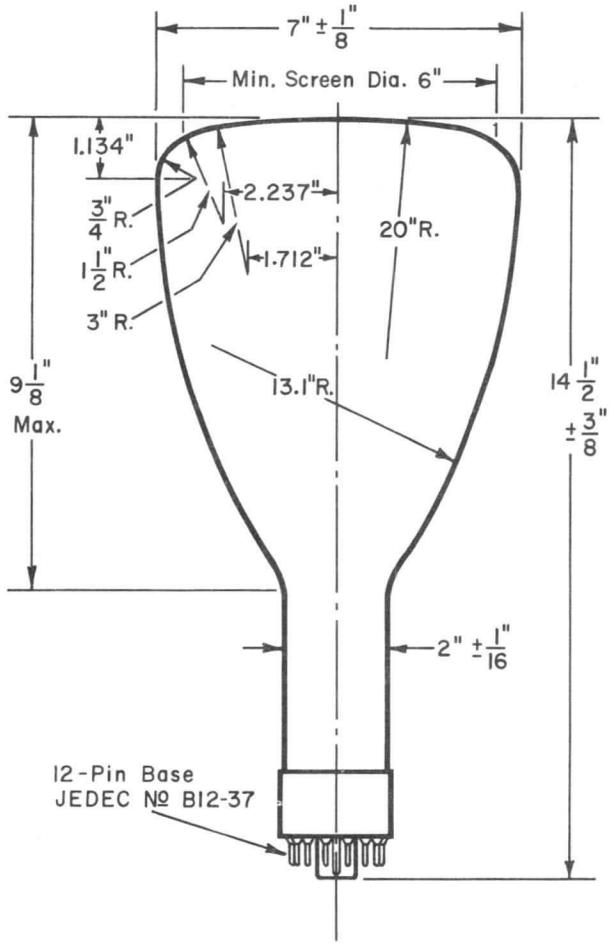

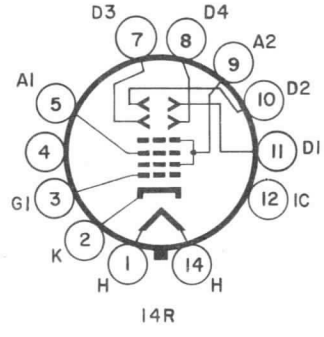

A. D1-D2 trace alinement with plane defined by base pin 5 and tube axis has an angular tolerance of 10°. Angle between D1-D2 trace and D3-D4 trace is 90° ± 3°. Positive voltage on D1 (pin 11) will move spot toward pin 5. Positive voltage on D3 (pin 7) will move spot toward pin 2.

The information contained herein is supplied without assuming responsibility for infringement of patents or other rights of third parties which may result from its use. No license is granted by implication or otherwise under any patent or patent rights of Westinghouse Electric Corporation.

HIGH TRANSCONDUCTANCE RADAR DISPLAY TUBE TYPE 10AMP7

The 10AMP7 is a low drive cathode ray tube with low-voltage-electrostatic focus and magnetic deflection designed for service in radar display applications. The electron gun has dual purpose electrodes providing a high transconductance amplifier triode. A negative polarity input signal of 3.5 to 6 volts will drive the tube to full brightness. Other characteristics include round glass construction, relatively flat, neutral gray glass faceplate and a long-persistence P-7 screen.

ELECTRICAL:

Cathode	Coated Unipotential	
Heater:		
Voltage (ac or dc)	6.3	Volts
Current	0.6 ± 10%	Ampere
Direct Interelectrode Capacitances:		
Triode Unit:		
Grid to Cathode	4.5	μμf
Grid to Plate (Note 1)	2.3	μμf
Grid to CRT Gun Grid 1	1	μμf
CRT Gun Unit:		
Grid 2 to Grid 1 (Note 1)	5.5	μμf
Grid 2 to all electrodes except Grid 1 (Note 1)	6	μμf
Grid 1 to all electrodes except Grid 2 (Note 1)	4	μμf
Input:		
Grid Drive (Note 2 & 3) (Approx.)	50	μμf
Output (Note 2)	8	μμf
Screen:		
Phosphor	P7	
Fluorescence	Blue	
Phosphorescence	Greenish-Yellow	
Persistence	Long	
Focusing Method	Low-Voltage Electrostatic	
Deflection Method	Magnetic	
Deflection Angle	53°	

MECHANICAL:

Mounting Position	Any
Minimum Screen Diameter	9-1/8"
Faceplate:	
Configuration	Spherical
Glass	Neutral Gray
Transmittance	76%
Bulb Diameter	10-1/2" ± 1/16"
Overall Length	16-15/16" ± 3/8"
Anode Terminal	Recessed Small Cavity Cap (JEDEC J1-21)
Base	Short Small Shell Duodecal 7-Pin Base
Net Weight	10 Pounds

MAXIMUM RATINGS:

Absolute Maximum Values

CRT Gun Unit:			
Anode Voltage	12000	max.	Volts
Grid 4 (Focus) Voltage	1000	max.	Volts
Grid 2 & Triode Plate Voltage	350	max.	Volts
Grid 1 Voltage:			
Negative Bias Value	150	max.	Volts
Positive Bias Value	0	max.	Volts
Positive Peak Value	0	max.	Volts
Peak Heater-Cathode Voltage:			
Heater-Positive with respect to cathode	180	max.	Volts
Heater-Negative with respect to cathode (Note 4)	180	max.	Volts
Triode Unit:			
Grid Negative Bias	50	max.	Volts
Plate Dissipation	3.5	max.	Watts
Average Cathode Current	25	max.	Ma.

LIMITING CIRCUIT VALUES:

CRT Gun Grid 1 Circuit Resistance	0.5	max.	Megohm
Triode Grid Circuit Resistance	10000	max.	Ohms

TYPICAL OPERATING CONDITIONS: (Note 5)

DC to 15 Mc. Bandpass (Note 6)

CRT Gun Unit:		
Anode Voltage	10000	Volts
Grid 4 (focus) Voltage (Note 7)	0 to 600	Volts
Grid 2 & Triode Plate Supply Voltage, E_{cc2} (Note 1)	300	Volts
Grid 2 & Triode Plate Voltage, E_{c2} (Note 8)	155	Volts
Grid 1 Supply Voltage, $-E_{cc1}$ (Note 2)	−205 to −235	Volts
Grid 1 Voltage for Spot Cut-off, $-E_{co}$ (Note 9)	−25 to −40	Volts
Triode Unit:		
Grid Bias Voltage (Note 10) (Approx.)	−5.7	Volts
Amplification Factor	20	
Plate Resistance (Note 11)	1.5	Kilohm
Transconductance (Note 11)	13500	μmhos
Plate Current	22	Ma.
Plate Load Resistor	6.6	Kilohms
Gain (Approx.)	14	
Spot Position (Note 12)	18	mm

1. Triode plate and CRT Gun Grid 2 are connected internally.
2. Obtained for a value of voltage coupling coefficient (k_c) between triode plate and control grid equal to 0.5.
3. Taking into account reflected capacitance due to Miller effect.
4. A peak value of 410 volts may be applied for not more than 15 seconds during equipment warm-up periods.
5. A typical line width of 0.018" may be expected with an anode current of 100 microamperes.
6. With proper mounting of the high frequency circuitry at the tube socket as suggested in "Theory of Operation and Application Information for Low Drive Cathode Ray Tube".
7. Measured at 100 microamperes anode current.
8. $\underline{E}_{c2}$ is the quiescent plate voltage at zero signal input (black level).
9. $-\underline{E}_{co}$ is the voltage difference between cathode and control grid pins required to cut off the cathode ray beam when the gun is operating at the quiescent plate voltage level $\underline{E}_{c2}$.
10. Voltage measured with respect to cathode.
11. At indicated quiescent plate voltage $\underline{E}_{c2}$ operating point.
12. The center of the undeflected, unfocused spot will fall within a circle having an 18 mm radius concentric with the center of the tube face.

AVERAGE GRID DRIVE CHARACTERISTICS

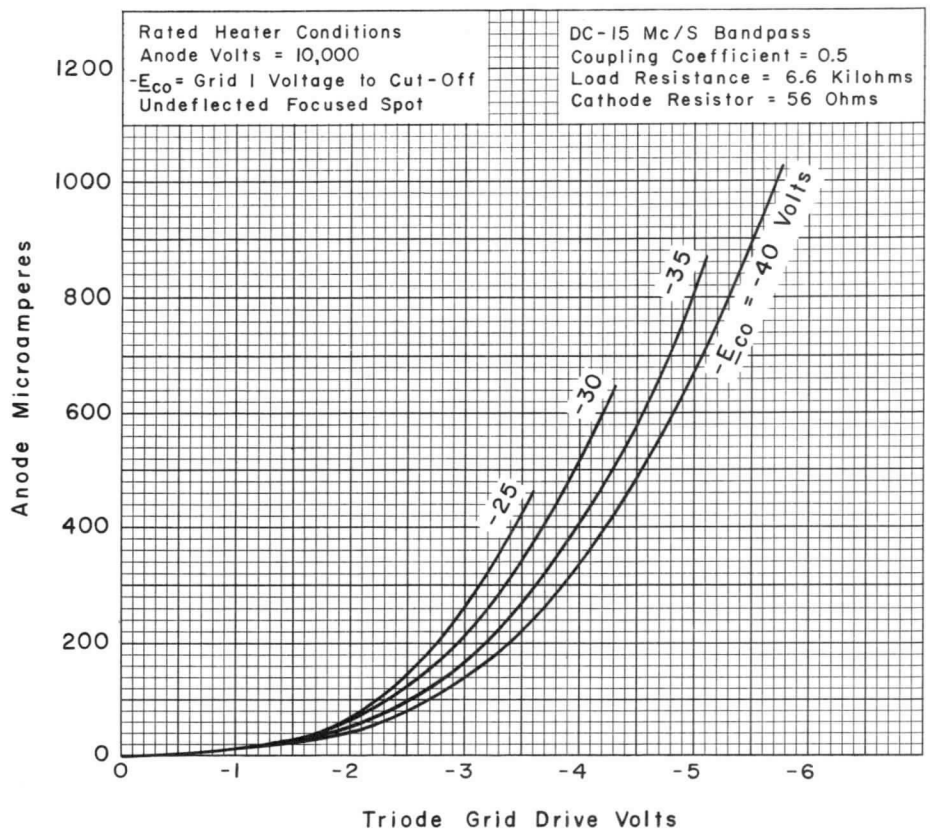

CE-A1694

AVERAGE PLATE CHARACTERISTICS

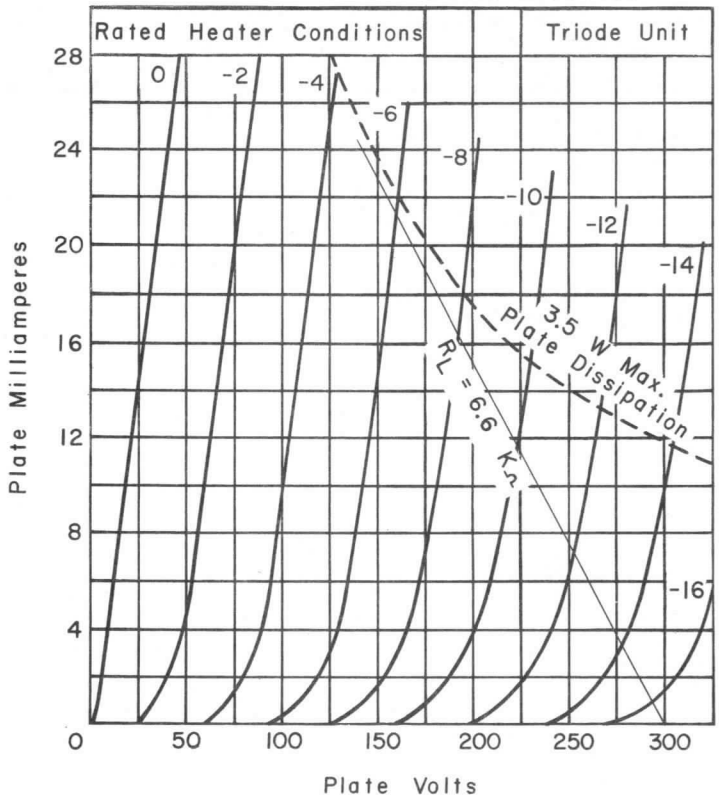

CE-A1693

AVERAGE CHARACTERISTICS

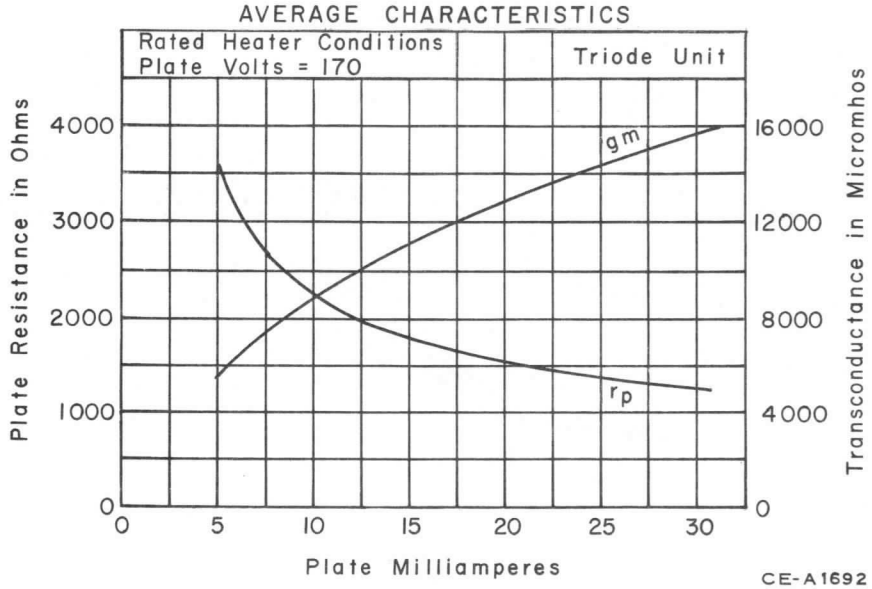

CE-A1692

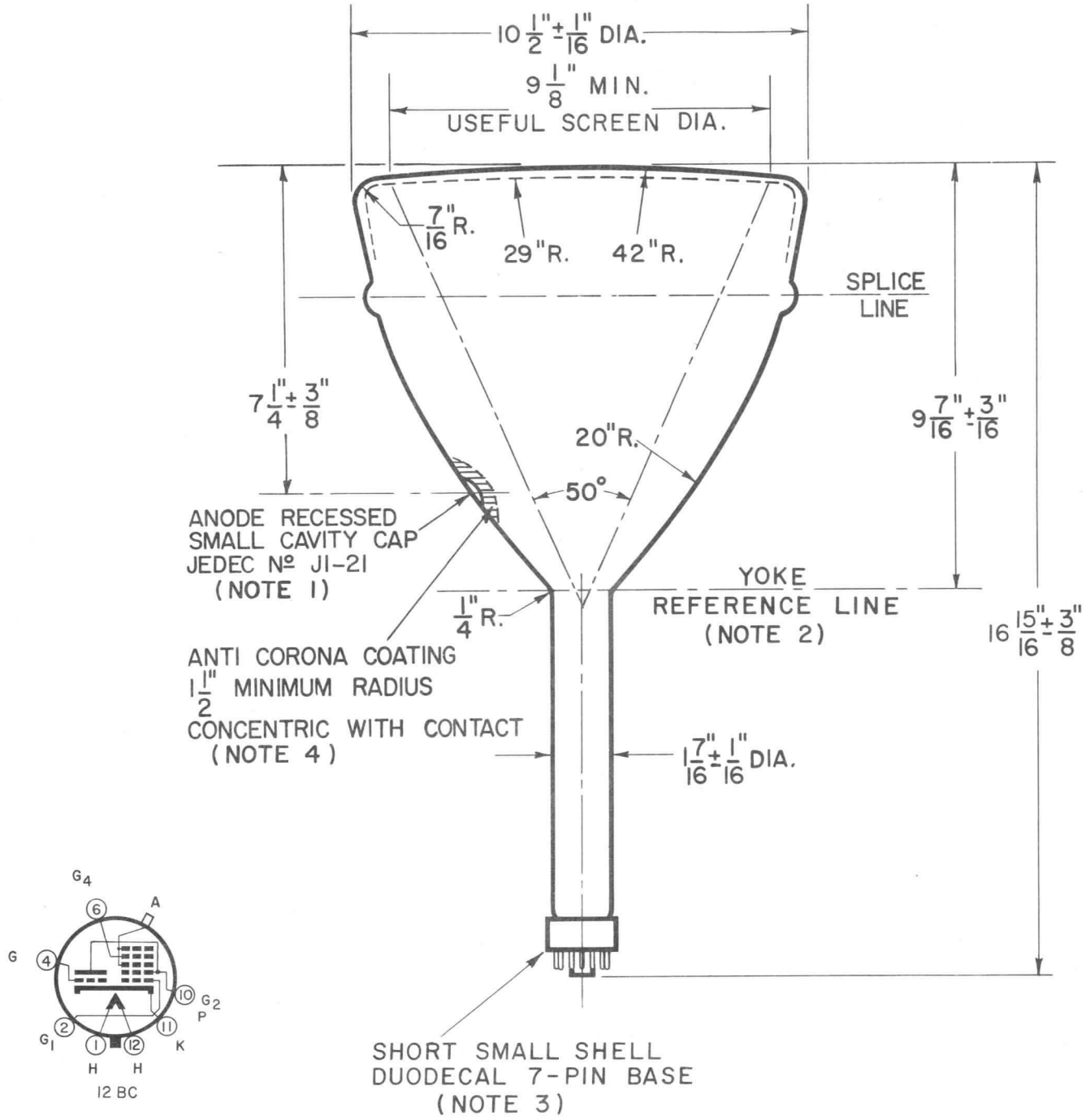

CE-A 1626 R1

Note 1: Anode terminal alignment with base pin 3 has angular tolerance about tube axis of ± 10°.

Note 2: Yoke Reference Line is determined by Plane surface of flared end of JEDEC Reference-Line Gauge No. 112 when seated on tube funnel.

Note 3: The socket should not be rigidly mounted but should be allowed to move freely on flexible leads.

Note 4: Do not handle tube by part of bulb having anti-corona coating. To clean this area, wipe only with a soft, dry, lintless cloth.

Westinghouse®

10KP–
10KP–A
10KP–B

April 1, 1964

MILITARY & INDUSTRIAL CATHODE RAY TUBE TYPES 10KP–, 10KP–A & 10KP–B

BASIC CHARACTERISTICS	TYPICAL APPLICATIONS	SPECIAL FEATURES
10" ROUND	RADAR	
50° MAGNETIC DEFLECTION		10KP-A & B; 0.015" LINE WIDTH
MAGNETIC FOCUS		10KP–B ALUMINIZED

ELECTRICAL

Cathode	Coated Unipotential
Heater:	
Voltage	6.3 Volts
Current	0.6 Ampere
Direct Interelectrode Capacitances:	
Grid 1 to all other Electrodes	6 pf
Cathode to all other Electrodes	5 pf
Focusing Method	Magnetic
Deflection	50° Magnetic

OPTICAL

Screen Phosphor	Note 1
Faceplate:	
Configuration	Spherical
Glass	Grey
Transmission	77%

MECHANICAL

Mounting Position	Any
Net Weight	7.5 Pounds

ABSOLUTE MAXIMUM RATINGS

Anode Voltage (Note 2)	22000 max.	Volts
Grid 2 Voltage	700 max.	Volts
Grid 1 Voltage:		
Negative Bias Value	180 max.	Volts
Positive Bias Value	0 max.	Volts
Positive Peak Value	2 max.	Volts
Peak Heater-Cathode Voltage:		
Heater Negative with Respect to Cathode:		
During Warm-Up Period of 15 Sec. Max.	410 max.	Volts
After Equipment Warm-Up Period	180 max.	Volts
Heater Positive with Respect to Cathode	180 max.	Volts

LIMITING CIRCUIT VALUES

Grid 1 Circuit Resistance	1.5 max. Megohms
Grid 2 Circuit Resistance	See Note 3

TYPICAL OPERATING CONDITIONS

Anode Voltage	10000	Volts
Grid 2 Voltage	300	Volts
Grid 1 Spot Cutoff Voltage	–35 to –72	Volts
Line Width for P7A or P7B (Note 4)	0.015	Inch
Focusing Coil Current (Note 5)	112 ± 15%	Ma.
Spot Position (Note 6)	18	mm

DRIVE CHARACTERISTICS

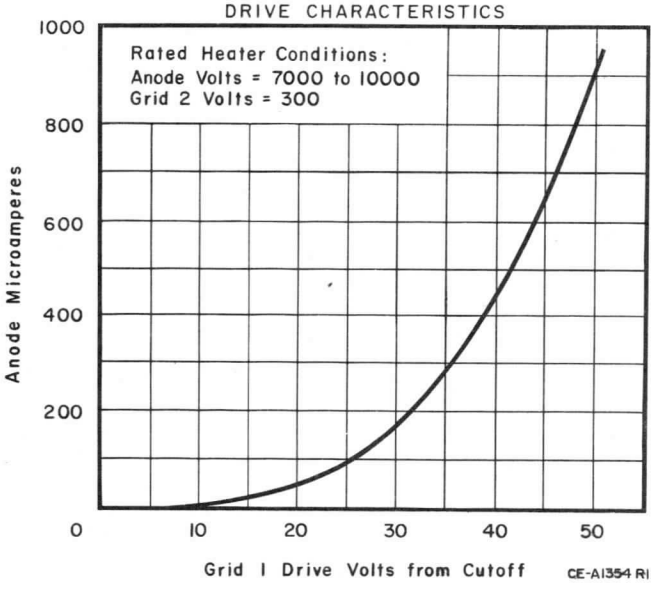

NOTES

1. Westinghouse Military & Industrial Cathode Ray Tubes can be supplied with most of the standard JEDEC phosphors.
2. Operation with voltage in excess of 16KV may require shielding to limit radiation of very soft x-rays.
3. A grid 2 circuit resistance of approximately 0.5 megohm should be provided.
4. Line width is measured by the shrinking raster method.
5. Current in JEDEC Focus Coil No. 106 for optimum focus with anode current of 50 microamperes with center of focus coil air gap 3-1/4" from yoke reference line.
6. With the tube shielded against external magnetic fields, the undeflected focused spot lies within a circle of 18 mm radius concentric with the faceplate.

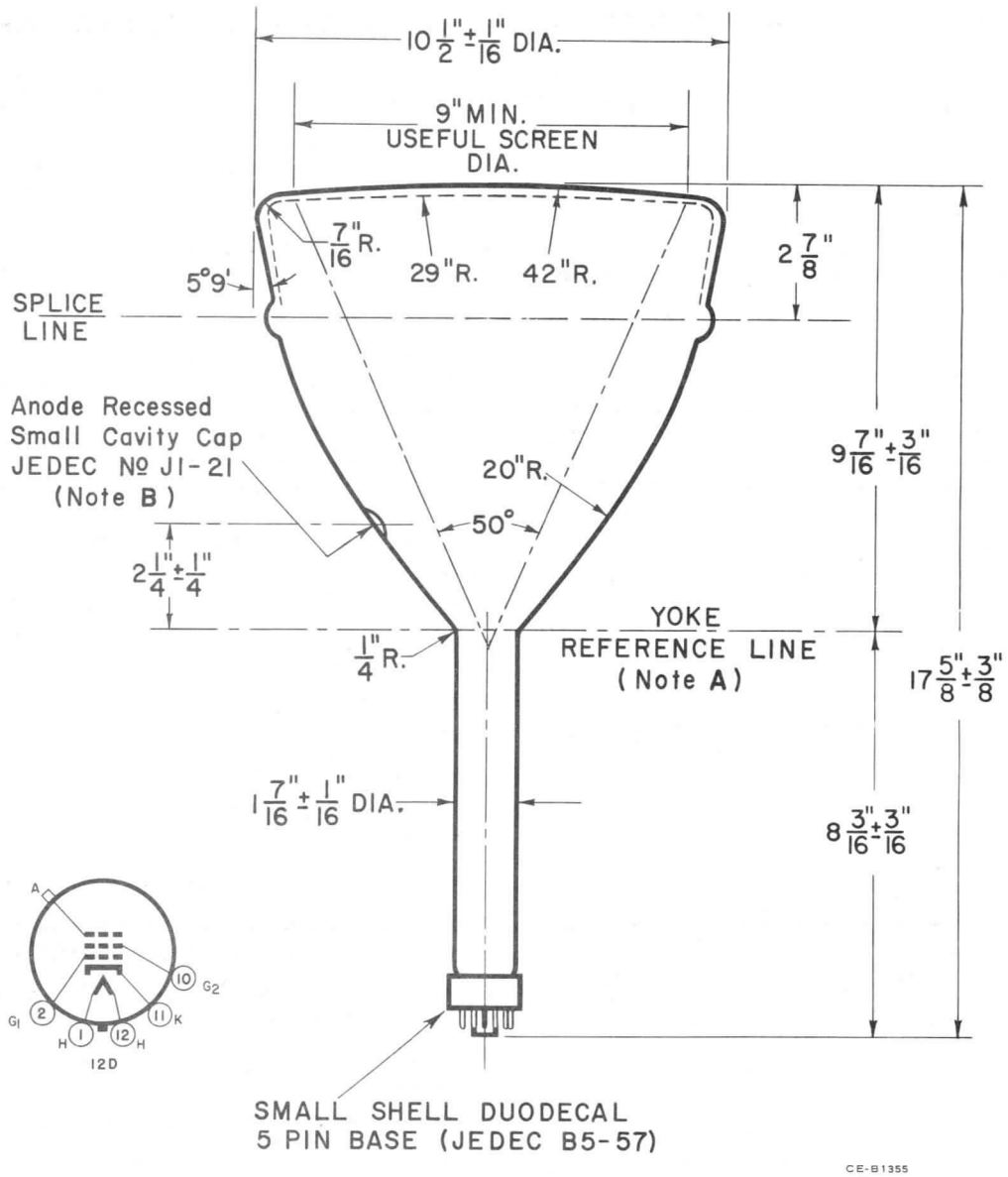

A. The Yoke Reference Line is determined by JEDEC Reference Line Gage No. 112.

B. The plane defined by the tube axis and pin position 3 will be within 10° of the plane defined by the tube axis and the anode.

The information contained herein is supplied without assuming responsibility for infringement of patents or other rights of third parties which may result from its use. No license is granted by implication or otherwise under any patent or patent rights of Westinghouse Electric Corporation.

November 1, 1965

MONITOR DISPLAY TUBE TYPE 10SP4

The 10SP4 is an electrostatic focus, magnetic deflection, directly viewed picture tube designed for service in monitors for industrial and commercial television installations.

This tube uses an acceleration type electron lens in its gun to achieve high resolution and uniformity of focus over entire picture area. This type of lens also assures constant focus despite variations of line voltage or brightness.

The 10SP4 has an aluminized screen to improve contrast, increase brightness and eliminate need for an ion trap magnet.

ELECTRICAL

Cathode	Coated Unipotential
Heater:	
Voltage	6.3 Volts
Current	0.6 ±10% Ampere
Direct Interelectrode Capacitances:	
Grid 1 to All Other Electrodes	6 pF
Cathode to All Other Electrodes	5 pF
Focusing Method	Electrostatic
Deflection	50° Magnetic

OPTICAL

Screen Phosphor	Aluminized P4
Faceplate:	
Configuration	Spherical
Glass	Neutral Gray
Transmission	76%

MECHANICAL

Mounting Position	Any
Net Weight	10 Pounds

MAXIMUM RATINGS:

Design Center Values

Anode Voltage⊕	20000 max.	Volts
Grid 3 Voltage (Focus)	3000 max.	Volts
Grid 2 Voltage	410 max.	Volts
Grid 1 Voltage:		
Negative Bias Value	125 max.	Volts
Positive Bias Value■	0 max.	Volts
Positive Peak Value	2 max.	Volts
Peak Heater-Cathode Voltage:		
Heater Negative with Respect to Cathode:		
During Warm-up Period of 15 seconds max.	410 max.	Volts
After Equipment Warm-up	180 max.	Volts
Heater Positive with Respect to Cathode	180 max.	Volts

LIMITING CIRCUIT VALUES:

Grid 1 Circuit Resistance	1.5 max.	Megohms
Grid 2 Circuit Resistance	10000 min.	Ohms
Grid 3 Circuit Resistance	10000 min.	Ohms

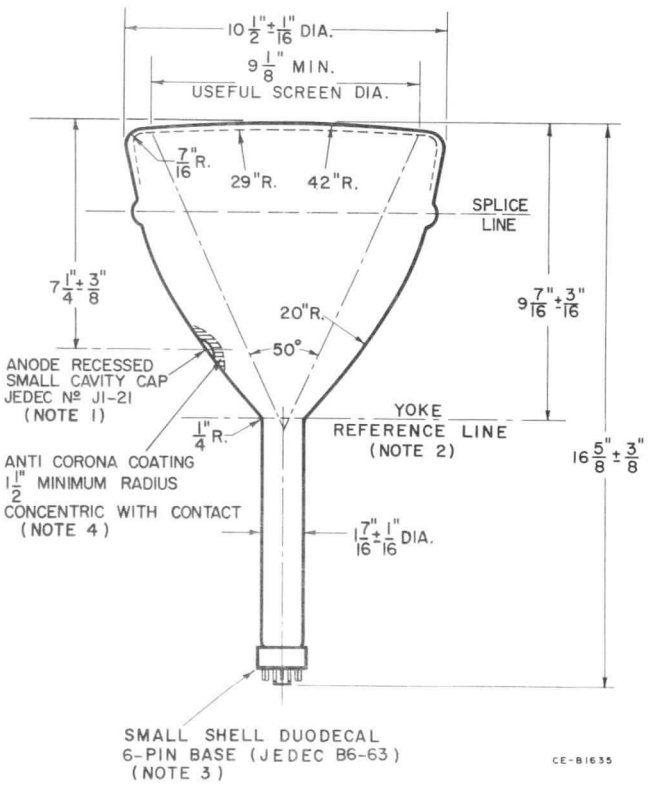

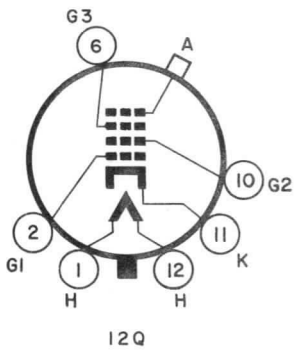

OUTLINE DRAWING NOTES

1. The plane defined by the tube axis and pin 6 will be within 10° of the plane defined by the tube axis and the anode.
2. The Yoke Reference Line is determined by JEDEC Reference Line Gage No. 112.
3. The socket should not be rigidly mounted but should be allowed to move freely or flexible leads.
4. Anti Corona Coating: Area concentric with anode terminal and having radius of 1-1/2" minimum. Caution: handling tube in coated area may impair its effectiveness. To clean this area, wipe only with a soft, dry, lintless cloth.

TYPICAL OPERATING CONDITIONS:

Anode Voltage⊕	12000	Volts
Grid 3 Voltage (Focus)□	1400 to 1900	Volts
Grid 3 Current (maximum)▲	85	μAmperes
Grid 2 Voltage	200	Volts
Grid 1 Voltage for Raster Cut-off	−18 to −48	Volts

⊕ Brilliance and definition decrease with decreasing anode voltage. In general anode voltage should not be less than 10000 volts.

■ At or near this rating, the effective resistance of the anode supply should be adequate to limit the anode input power to 6 watts.

□ For focus with anode current of 100 microamperes. (Approximately 12% to 16% of anode voltage).

▲ For focus with anode current of 200 microamperes. Grid 3 current increases as the anode voltage decreases.

AVERAGE GRID-DRIVE CHARACTERISTICS

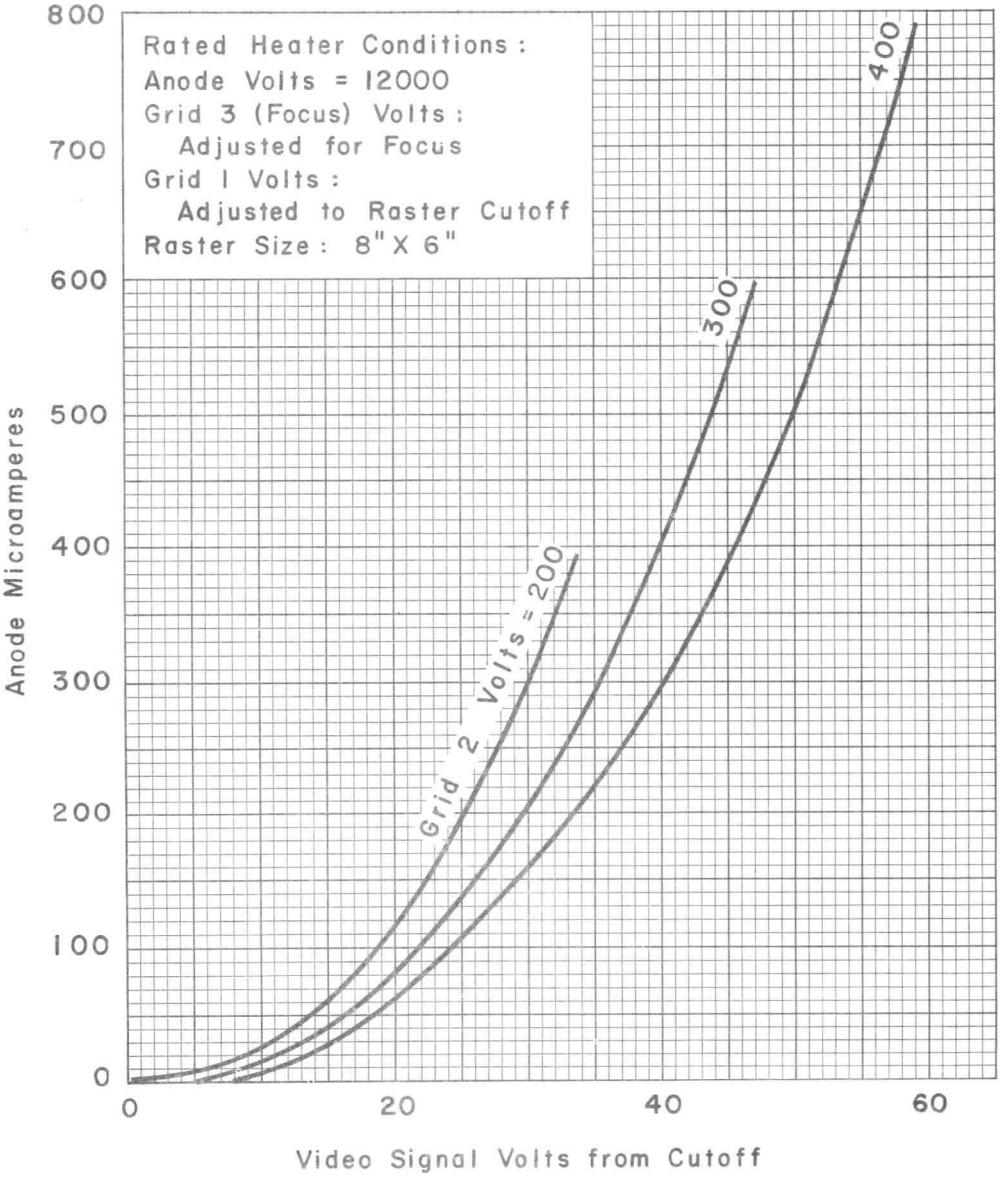

CE-A1567

The information contained herein is supplied without assuming responsibility for infringement of patents or other rights of third parties which may result from its use. No license is granted by implication or otherwise under any patent or patent rights of Westinghouse Electric Corporation.

CATHODE RAY TUBE TYPE 10UP14A

The 10UP14A is a 10 inch electrostatic focus magnetic deflection cathode ray tube. It is designed for radar and oscillographic applications requiring a high resolution electron gun and a medium long persistance screen. The focus lens operates at or near the cathode potential which provides automatic focus regardless of anode voltage variation. The 10UP14A has an aluminized screen for increased brightness, to prevent ion burn and to reduce screen charging.

ELECTRICAL:

Cathode	Coated Unipotential
Heater:	
Voltage	6.3 Volts
Current	0.6 ± 10% Ampere
Direct Interelectrode Capacitances:	
Grid 1 to All Other Electrodes	6.5 $\mu\mu$f
Cathode to All Other Electrodes	5 $\mu\mu$f
Screen:	
Phosphor	Aluminized P14
Fluorescence	Purple
Phosphorescence	Orange
Persistence	Medium Long
Focusing Method	Low Voltage Electrostatic
Deflection Method	Magnetic
Deflection Angle (Approx.)	50°

MECHANICAL:

Mounting Position	Any
Min. Useful Diameter	9 Inches
Faceplate Configuration	Spherical
Faceplate Glass	Clear
Bulb Diameter	10-1/2" ± 1/16"
Overall Length	17-5/8" ± 3/8"
Bulb Number (ASA Designation)	J84C
Bulb Contact	J1-21
Base	Small Shell Duodecal 6 Pin (JEDEC B6-63)
Basing	12M
Bulb Contact Alignment:	
Anode Contact Aligns with Pin Position No. 3	± 10°
Net Weight (Approx.)	10 lbs.
Shipping Weight (Approx.)	13 lbs.

MAXIMUM RATINGS:

Design Center Values

Anode Voltage♦	12000 max.	Volts
Anode Input	6 max.	Watts
Grid 4 Voltage (Focus Electrode)	−500 to +1000 max.	Volts
Grid 2 Voltage	700 max.	Volts
Grid 1 Voltage:		
Negative Bias Value	180 max.	Volts
Positive Bias Value	0 max.	Volts
Positive Peak Value	2 max.	Volts
Peak Heater-Cathode Voltage:		
Heater Negative with respect to cathode:		
During Warm-up Period not to exceed 15 Seconds	410 max.	Volts
After Warm-up	180 max.	Volts
Heater Positive with respect to cathode	180 max.	Volts

LIMITING CIRCUIT VALUES:

Grid 1 Circuit Resistance	1.5 max.	Megohms

TYPICAL OPERATING CONDITIONS:

Anode Voltage⊕	10,000	Volts
Focusing Electrode Voltage for Focus	−150 to +150	Volts
Focusing Electrode Current	−15 to +15	Microamperes
Grid 2 Voltage	300	Volts
Grid 1 Voltage for Spot Cutoff	−33 to −77	Volts
Line Width▲	0.38	mm
Spot Position★	13	mm

♦ Anode, grid No. 3 and grid No. 5 are connected within the tube and are referred to herein as anode.

⊕ Brilliance and definition decrease with decreasing anode voltage. In general, anode voltage should not be less than 7,000 volts.

▲ Measured in accordance with Mil-E-1D, paragraph 4.12.6.2. at an anode current of 100 microamperes.

★ The center of the undeflected, unfocused spot will fall within a circle 13 millimeters radius concentric with the tube face.

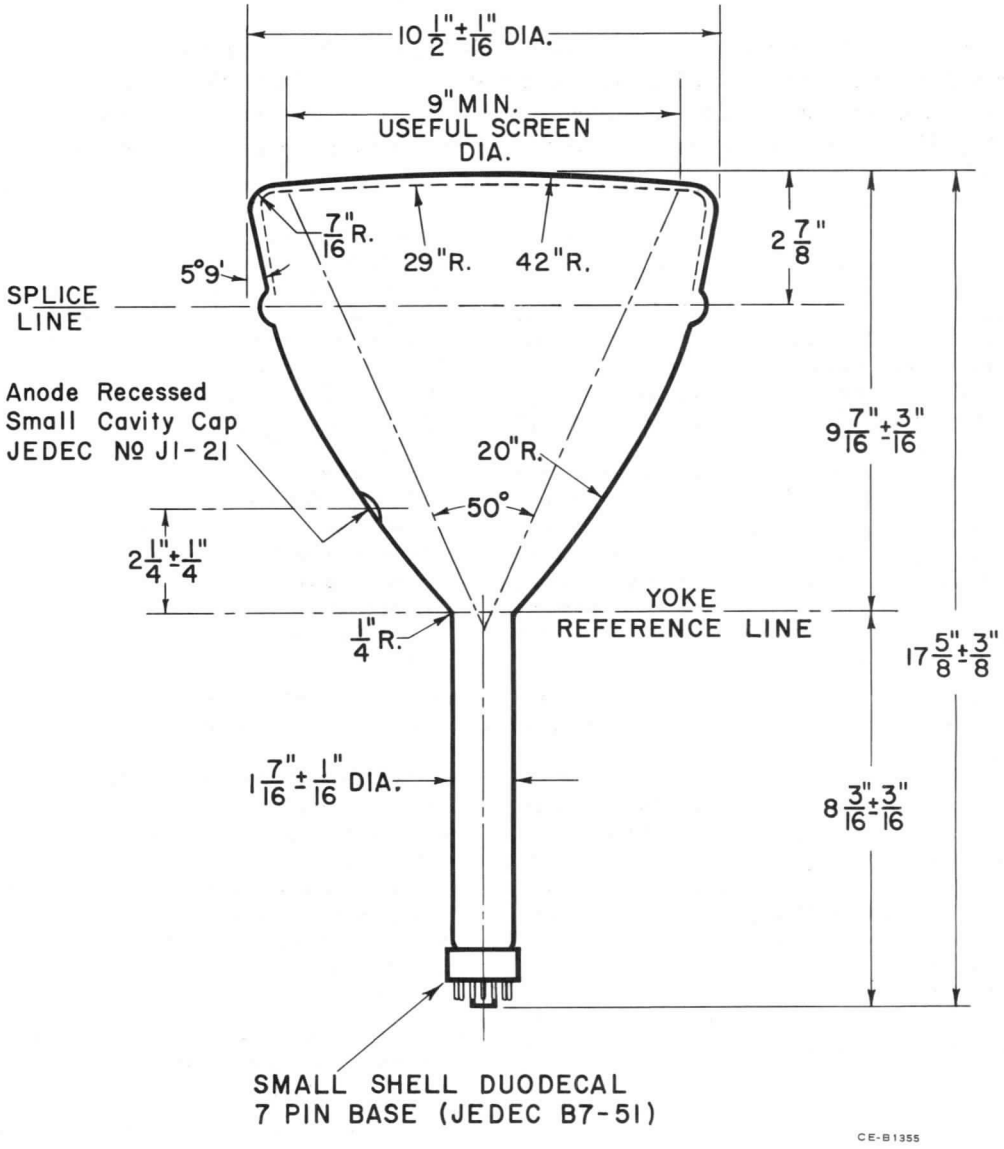
10 1/2" ± 1/16" DIA.
9" MIN. USEFUL SCREEN DIA.
7/16" R.
29" R.
42" R.
2 7/8"
5°9'
SPLICE LINE
Anode Recessed Small Cavity Cap JEDEC Nº J1-21
20" R.
50°
9 7/16" ± 3/16"
2 1/4" ± 1/4"
YOKE REFERENCE LINE
1/4" R.
17 5/8" ± 3/8"
1 7/16" ± 1/16" DIA.
8 3/16" ± 3/16"
SMALL SHELL DUODECAL
7 PIN BASE (JEDEC B7-51)
CE-B1355

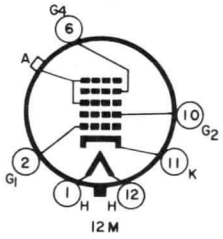
G4
6
A
10
G2
2
G1
11
K
1
H
H
12
12M

Westinghouse

10WP–
10WP–A

December 1, 1964

MILITARY & INDUSTRIAL CATHODE RAY TUBES 10WP– & 10WP–A

Basic Characteristics
10" Round Spherical Faceplate
50° Magnetic Deflection
Electrostatic Focus

Typical Applications
RADAR

Special Features
0.017" Spot Diameter
10WP–A is Aluminized

ELECTRICAL

Cathode	Coated Unipotential
Heater:	
Voltage	6.3 Volts
Current	0.6 Ampere
Direct Interelectrode Capacitances:	
Grid 1 to all other Electrodes	6 pf
Cathode to all other Electrodes	5 pf
Focusing Method	Electrostatic
Deflection	50° Magnetic

OPTICAL

Screen Phosphor	Note 1
Faceplate:	
Configuration	Spherical
Glass	Grey
Transmission	77%

MECHANICAL

Mounting Position	Any
Net Weight	7.5 Pounds

TYPICAL DRIVE CHARACTERISTICS

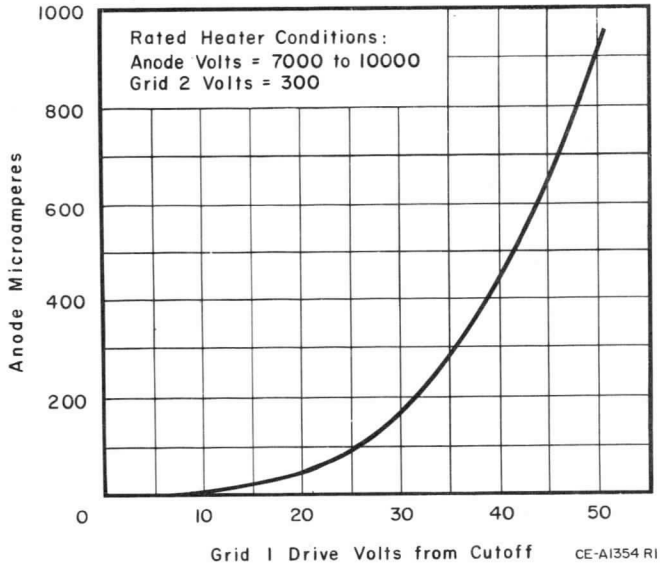

ABSOLUTE MAXIMUM RATINGS

Anode Voltage	12000 max.	Volts
Grid 4 (Focus) Voltage	1000 max.	Volts
Grid 2 Voltage	700 max.	Volts
Grid 1 Voltage:		
Negative Bias Value	180 max.	Volts
Positive Bias Value	0 max.	Volts
Positive Peak Value	0 max.	Volts
Peak Heater-Cathode Voltage:		
Heater Negative with respect to Cathode:		
During Warm-up Period of 15 Sec. Max.	410 max.	Volts
After Equipment Warm-up Period	180 max.	Volts
Heater Positive with Respect to Cathode	180 max.	Volts

LIMITING CIRCUIT VALUES

Grid 1 Circuit Resistance	1.5 max.	Megohms
Grid 2 Circuit Resistance	Approx. 0.5	Megohms
Focus Electrode Circuit Resistance	10000 min.	Ohms

TYPICAL OPERATING CONDITIONS

Anode Voltage	10000	Volts
Grid 4 (Focus) Voltage	0 to 300	Volts
Grid 2 Voltage	300	Volts
Grid 1 Spot Cutoff Voltage	–33 to –72	Volts
Line Width for P 7 (Note 2)	0.017	Inch
Spot Position (Note 3)	18	mm

NOTES

1. Westinghouse Military & Industrial Cathode Ray Tubes can be supplied with most of the standard JEDEC phosphors.
2. Line width is measured by the shrinking raster method with a beam current of 100 microamperes.
3. With the tube shielded against external magnetic fields, the undeflected focused spot lies within a circle of 18 mm radius concentric with the faceplate.

WESTINGHOUSE ELECTRIC CORPORATION, ELECTRONIC TUBE DIVISION, ELMIRA, NEW YORK

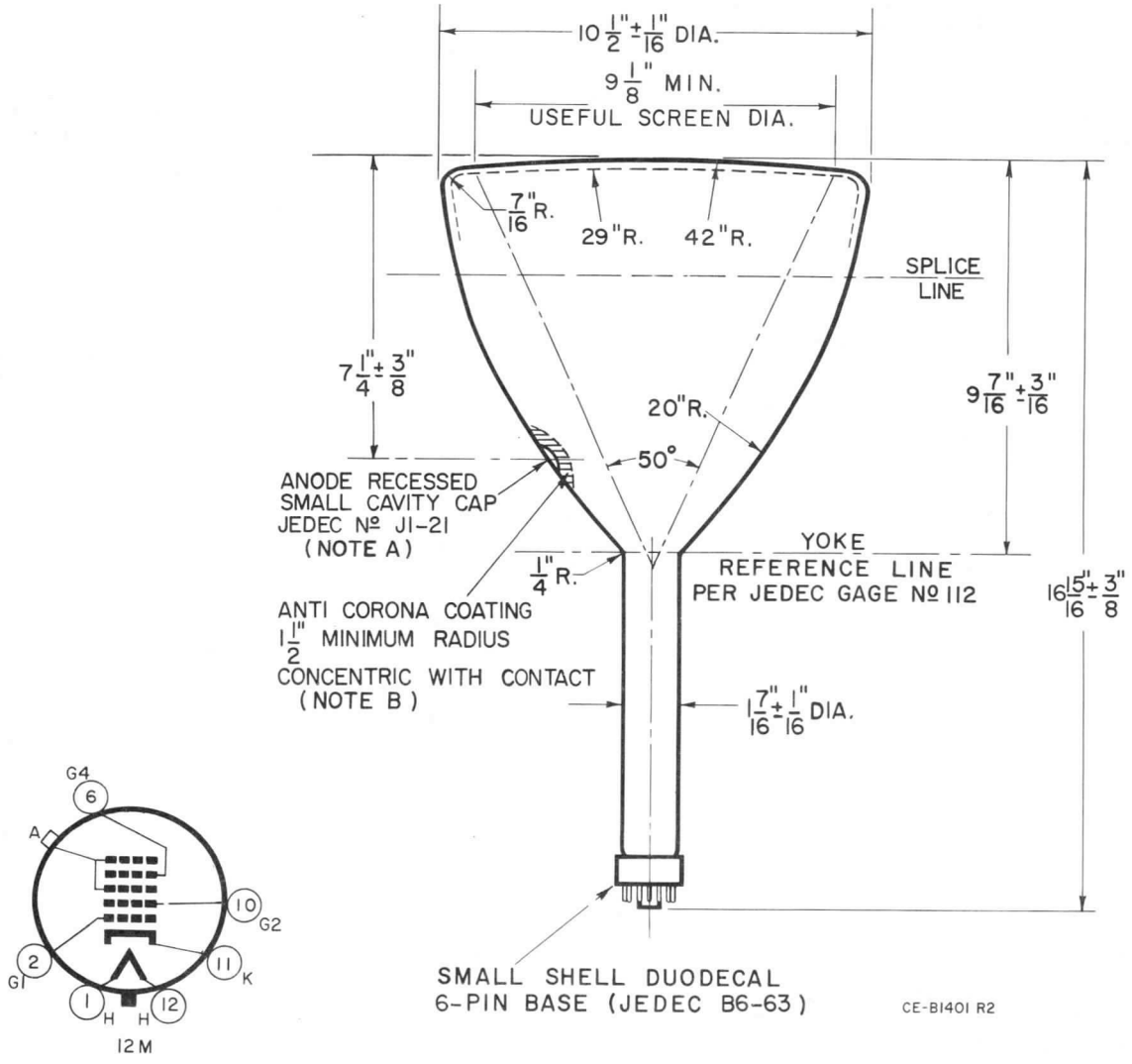

A. The plane defined by the tube axis and pin position 3 will be within 10° of the plane defined by the tube axis and the anode.

B. Tube must not be handled by part of bulb having anti-corona coating.

The information contained herein is supplied without assuming responsibility for infringement of patents or other rights of third parties which may result from its use. No license is granted by implication or otherwise under any patent or patent rights of Westinghouse Electric Corporation.

April 15, 1962

RADAR DISPLAY TUBE TYPE 12ABP7A

The 12ABP7A is a 12" electrostatic focus, magnetic deflection cathode ray tube suitable for radar application. The 12ABP7A employs a low voltage electrostatic focus system which gives good definition. It has a metal-backed screen for greater light output and the faceplate is of gray filter-glass for improved contrast.

ELECTRICAL:

Cathode	Coated Unipotential	
Heater:		
Voltage	6.3	Volts
Current	0.60	Ampere
Direct Interelectrode Capacitances:		
Grid 1 to all other Electrodes	6.0	uuf
Grid 2 to all other Electrodes	10.0	uuf
Cathode to all other Electrodes	5.0	uuf
Screen:		
Phosphor	P7	
Fluorescence	Blue	
Phosphorescence	Yellow	
Persistence	Long	
Focusing Method	Electrostatic	
Deflection Method	Magnetic	
Deflection Angle	55°	

MECHANICAL:

Mounting Position	Any
Min. Useful Screen Diameter	11 Inches
Faceplate Configuration	Spherical
Glass	Filter
Transmission	74%
Bulb Diameter (Greatest)	12-7/16 ± 1/8 Inches
Overall Length	18 ± 3/8 Inches
Neck Length	7-1/2 Inches
Base (JEDEC Designation)	B6-63
Bulb Number	J99 1/2 A1
Bulb Contact (JEDEC Designation)	J1-21
Basing (JEDEC Designation)	12M

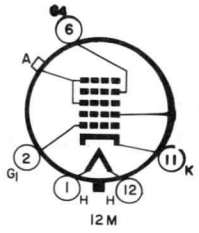

12M

MAXIMUM RATINGS:

Design Center Values

Anode Voltage	12000 max.	Volts
Anode Input	6 max.	Watts
Grid 4 (Focusing Electrode) Voltage	-500 to 1000 max.	Volts
Grid 2 Voltage	700 max.	Volts
Grid 1 Volts:		
Negative Bias Value	180 max.	Volts
Positive Bias Value	0 max.	Volts
Positive Peak Value	0 max.	Volts
Peak Heater-Cathode Voltage:		
Heater Negative with Respect to Cathode:		
During Warm-up Period not to exceed 15 Seconds	410 max.	Volts
After Equipment Warm-up	180 max.	Volts
Heater Positive with Respect to Cathode	180 max.	Volts

LIMITING CIRCUIT VALUES:

Grid 1 Circuit Resistance	1.5 max.	Megohms
Grid 2 Circuit Resistance	0.1 min.	Megohms
Grid 4 Circuit Resistance	0.1 min.	Megohms

TYPICAL OPERATING CONDITIONS:

Anode Voltage, (Note 4)	10000	Volts
Grid 4 Voltage, (Note 1)	0 to 300	Volts
Grid 2 Voltage	300	Volts
Grid 1 Voltage (Note 2)	-28 to -72	Volts
Line Width A, (Note 3)	0.019 max.	Inch
Spot Position (From Face Center)	5/8 max.	Inch

NOTES

1. With the combined Grid No. 1 bias voltage and video-signal voltage adjusted to give an anode current of 100 microamperes on a 7-1/2" × 10" picture size.
2. Visual extinction of focused undeflected spot.
3. Measured by shrinking raster method.
4. Brilliance and definition decrease with decreasing anode voltage. In general, the anode voltage should not be less than 8 KV.

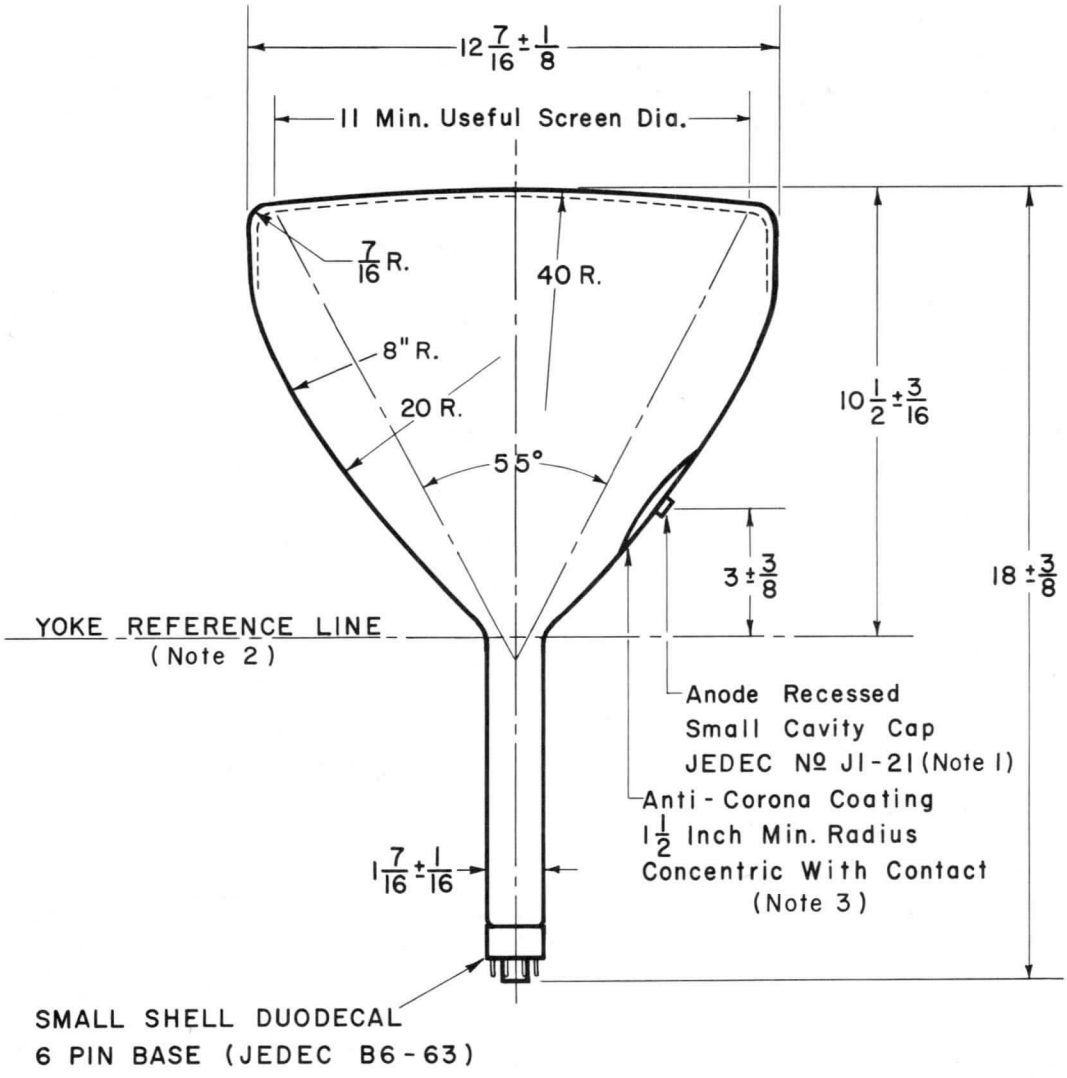

CE-B1356

Drawing Notes

1. Anode terminal alignment with base pin 3 has angular tolerance about tube axis of ± 10°.
2. Yoke Reference Line is determined end of JEDEC Reference-Line Gauge No. 112 when seated on tube funnel.
3. Do not handle tube by part of bulb having anti-corona coating.

CATHODE RAY TUBE TYPE 12SP7D

The 12SP7D is a magnetic focus and deflection cathode ray tube used for radar and oscillographic applications that require a long persistance screen. The bulb is carefully selected to pass a very limited range in contour tolerances. It has a high resolution electron gun which was improved to give a small round spot with excellent depth of focus. The tube has an aluminized screen for increased brightness, to prevent ion burn and to reduce screen charging.

ELECTRICAL:

Cathode	Coated Unipotential
Heater:	
Voltage	6.3 Volts
Current	0.6 ± 10% Ampere
Direct Interelectrode Capacitances:	
Grid 1 to All Other Electrodes	8 $\mu\mu$f
Cathode to All Other Electrodes	5 $\mu\mu$f
Screen:	
Phosphor	Aluminized P7
Fluorescence	Blue
Phosphorescence	Yellow
Persistence	Long
Focusing Method	Magnetic
Deflection Method	Magnetic
Deflection Angle (Approx.)	54°

MECHANICAL:

Mounting Position	Any
Screen Diameter (minimum)	11"
Faceplate Configuration	Spherical
Glass	Gray
Transmission (Approx.)	74%
Bulb Diameter	12-7/16" +1/16" –1/32"
Overall Length	18-3/4" +3/8"
Net Weight (Approx.)	12 lbs.
Shipping Weight (Approx.)	15 lbs.
Anode Terminal	JEDEC J1-21
Base	Small Shell Duodecal 5 Pin (JEDEC B5-57)
Basing	12D
Bulb	J99½ A1

MAXIMUM RATINGS:

Design Center Values

Anode Voltage (Note 1)	13,700	max.	Volts
Anode Input	6	max.	Watts
Grid 2 Voltage	700	max.	Volts
Grid 1 Voltage:			
Negative Bias Value	180	max.	Volts
Positive Bias Value	0	max.	Volts
Positive Peak Value	2	max.	Volts
Peak Grid 1 Drive from Cutoff	65	max.	Volts
Peak Heater-Cathode Voltage:			
Heater Negative with Respect to Cathode			
During Warm-up period not to exceed 15 sec.	410	max.	Volts
After Equipment Warm-up	180	max.	Volts
Heater Positive with respect to Cathode	180	max.	Volts

LIMITING CIRCUIT VALUES:

Grid 1 Circuit Resistance	1.5	max.	Megohms

TYPICAL OPERATING CONDITIONS:

Anode Voltage (Note 2)	9000	Volts
Grid 2 Voltage	250	Volts
Grid 1 Voltage for Spot Cutoff	–27 to –63	Volts
Focusing Coil Current (Note 3)	104	Milliamperes DC
Line Width (Max.) (Note 4)	0.38	Millimeters
Spot Position (Note 5)	20	Millimeters

1. Anode and grid 3 are connected internally and referred to herein as anode.
2. Brightness and focus quality decrease with decreasing anode voltage. In general, the anode voltage should not be less than 4000 volts.
3. For RETMA focusing coil No. 106 with distance from yoke reference line to center of air gap equal to 3-1/4 inches.
4. Measured in accordance with Mil-E-1D, paragraph 4.12.6.2, at an anode current of 200 microamperes.
5. The center of the undeflected, unfocused spot will fall within a 20 millimeter radius circle concentric with tube faceplate.

Westinghouse

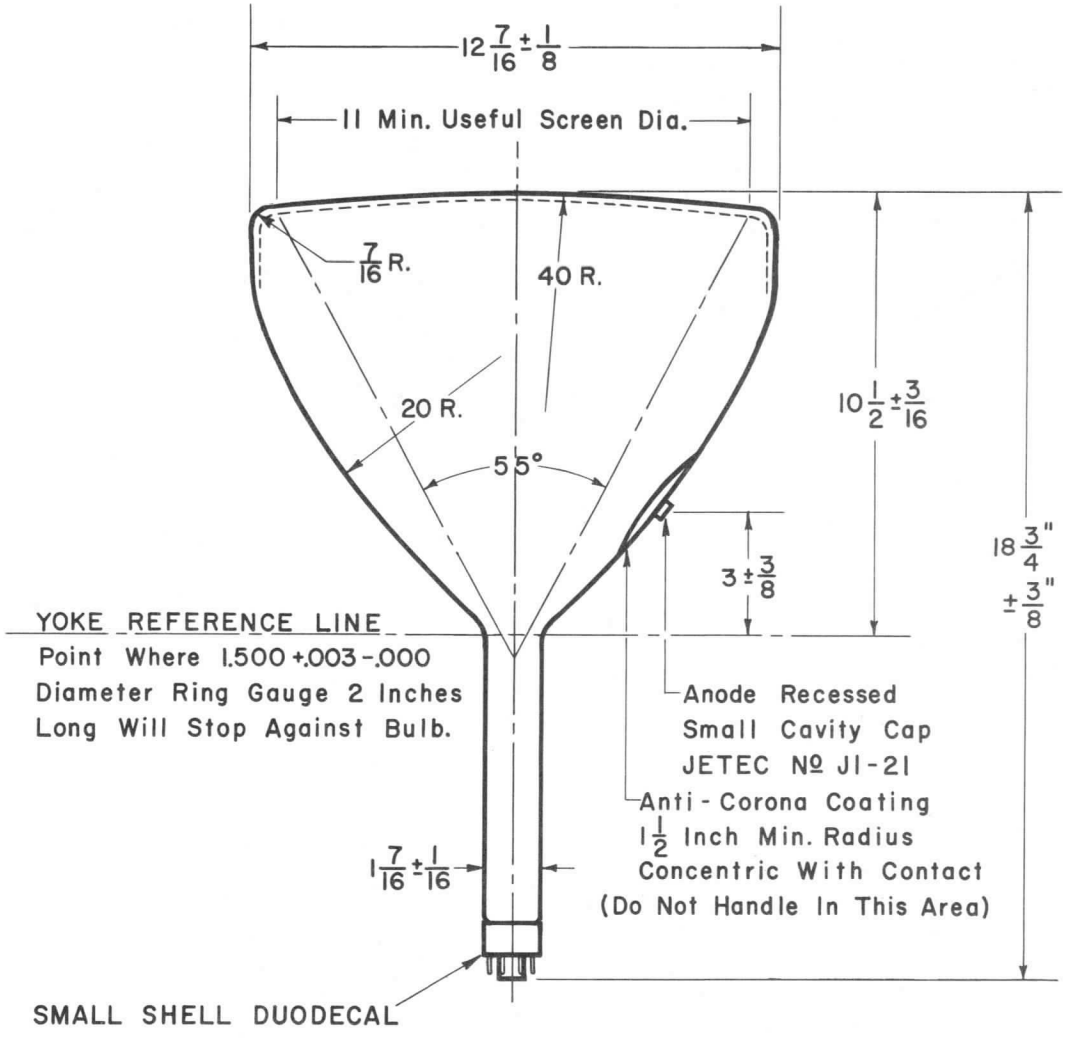

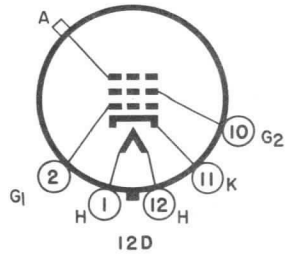

October 1, 1961

RADAR DISPLAY TUBE TYPE 14AZP4

The 14AZP4 is a magnetically focused, magnetically deflected cathode ray display tube. Its high resolution gun coupled with high brightness capabilities make it especially suited for high resolution monitor applications.

The face is gray-glass for improved contrast and the screen is aluminized for increased brightness.

ELECTRICAL:

Cathode	Coated Unipotential	
Heater:		
Voltage (ac or dc)	6.3	Volts
Current	0.6	Volts
Direct Interelectrode Capacitances:		
Grid 1 to All Other Electrodes	6	μμf
Cathode to All Other Electrodes	5	μμf
Screen:		
Phosphor	Aluminized P4	
Fluorescence	White	
Persistence	Short	
Focusing Method	Magnetic	
Deflection Method	Magnetic	
Horizontal Angle, (approx.)	65°	
Vertical Angle, (approx.)	50°	
Diagonal Angle, (approx.)	70°	
No Ion Trap Gun	No Magnet Required	

MECHANICAL:

Mounting Position	Any
Useful Screen Dimensions:	
Screen Area, Min.	96 Sq. Inches
Height	8-5/8" Min.
Width	11-1/2" Min.
Diagonal	12-3/4" Min.
Faceplate	Spherical
Glass	Neutral Filter
Transmission	76%
Bulb Dimensions:	
Height	9-23/32" ± 1/8"
Width	12-17/32" ± 1/8"
Diagonal	13-11/16" ± 1/8"
Neck Length	7-3/16" ± 1/4"
Overall Length	16-1/2" ± 3/8"
Anode Terminal	Recessed Small Cavity Cap (JEDEC J1-21)
Base	Small Shell Duodecal 5-Pin (JEDEC B5-57)
Basing	12D

MAXIMUM RATINGS

Design Center Values

Anode Voltage*	20000	max.	Volts
Grid 2 Voltage	500	max.	Volts
Grid 1 Voltage:			
Negative Bias Value	140	max.	Volts
Negative Peak Value	200	max.	Volts
Positive Bias Value	2	max.	Volts
Positive Peak Value	0	max.	Volts
Peak Heater-Cathode Voltage:			
Heater Negative with Respect to Cathode:			
During warmup period of 15 sec. max.	410	max.	Volts
After Equipment Warmup Period	180	max.	Volts
Heater Positive with Respect to Cathode	180	max.	Volts

TYPICAL OPERATING CONDITIONS:

Anode Voltage	16000	18000	Volts
Grid 2 Voltage	300	300	Volts
Grid 1 Voltage for Spot Cutoff	-35 to -75	-35 to -75	Volts
Focusing Coil Current■	110 ±20%	110 ± 20%	Ma.
Line Width▲	.013	.013	Inch

LIMITING CIRCUIT VALUES:

Grid 1 Circuit Resistance	1.5	max.	Megohms
Grid 2 Circuit Resistance	10000	min.	Ohms
Grid 4 Circuit Resistance	10000	min.	Ohms

* Brilliance and definition decrease with decreasing anode voltage. In general, anode voltage should not be less than 12000 volts.

♦ Protective resistance in the Grid 2 and Grid 4 circuits is advisable to prevent damage to the tube.

■ For RMA standard focus coil, JEDEC #109, or equivalent to produce best focus at an anode current of 100 μa.

▲ With an anode current of 100 microamperes, typical line width at center of faceplate, using half-amplitude points of light energy distribution of a single line, is 0.013".

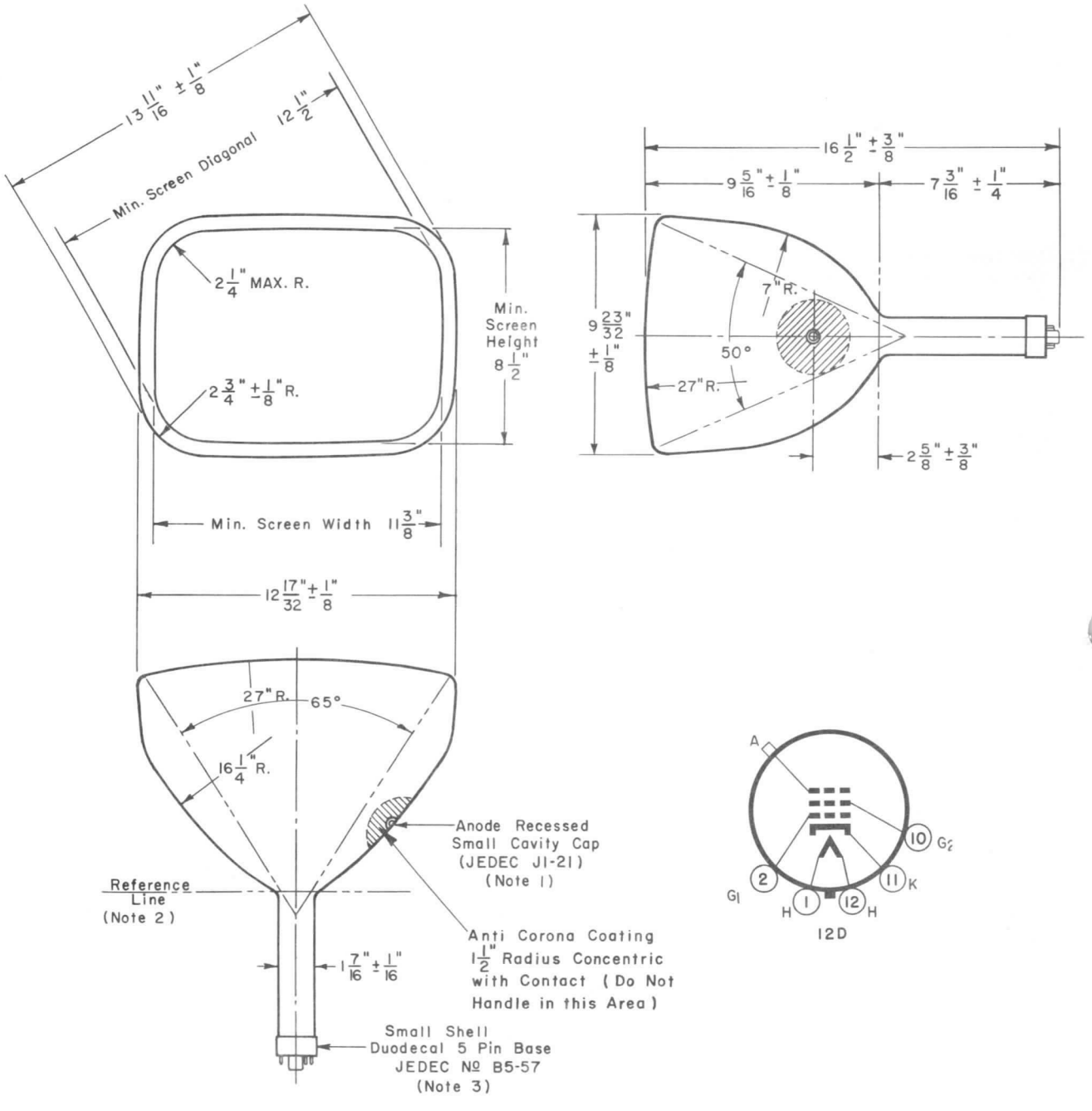

CE-C1461

NOTE 1: Anode terminal alignment with vacant base-pin position 3 has angular tolerance about tube axis of ± 30°.

NOTE 2: Yoke Reference Line is determined by plane of flared end of JEDEC Reference-Line Gauge No. 110 when seated on funnel of tube.

NOTE 3: The socket should not be mounted rigidly but should be allowed to move freely and have flexible leads.

X-RAY WARNING: Operation with voltages in excess of 16KV may require shielding to limit radiation of very soft x-rays.

The information contained herein is supplied without assuming responsibility for infringement of patents or other rights of third parties which may result from its use. No license is granted by implication or otherwise under any patent or patent rights of Westinghouse Electric Corporation.

April 15, 1963

CATHODE RAY TUBE TYPE 16AKP7

BASIC CHARACTERISTICS	TYPICAL APPLICATION	SPECIAL FEATURES
16" Round Bulb	Radar	Aluminized Screen
53° Magnetic Deflection	Indicator	All Glass
Electrostatic Focus		No Ion Trap

ELECTRICAL

Cathode	Coated Unipotential
Heater:	
Voltage (ac or dc)	6.3 Volts
Current	0.60 ± 10% Ampere
Direct Interelectrode Capacitances:	
Grid 1 to All Other Electrodes	9.0 μμf
Grid 2 to All Other Electrodes	7.0 μμf
Cathode to All Other Electrodes	7.0 μμf
Focusing Method	Electrostatic
Deflection:	
Method	Magnetic
Angle	53°

MECHANICAL

Mounting Position	Any
Screen Dimension:	
Diameter	14-1/2" Min.
Faceplate:	
Configuration	Spherical
Glass	Neutral Gray
Transmission	76%
Bulb Dimensions:	
Diameter	15-7/8" ± 1/8"
Neck Length	7-3/16" ± 3/16"
Overall Length	22-1/16" ± 3/8"
Anode Terminal	Small Cavity Cap (JEDEC J1-21)
Base	Small Shell Duodecal 6-Pin Base (JEDEC B6-63)
Net Weight	16-3/4 Pounds

MAXIMUM RATINGS

Design Center Values

Anode Voltage	14000	max.	Volts
Grid 4 (Focus) Voltage	1000	max.	Volts
Grid 2 Voltage	450	max.	Volts
Grid 1 Voltage			
Negative Bias Value	140	max.	Volts
Positive Bias Value	0	max.	Volts
Positive Peak Value	0	max.	Volts
Peak Heater-Cathode Voltage:			
Heater Negative with respect to Cathode:			
During Warm-Up Period of 15 seconds max.	410	max.	Volts
After Equipment warm-up period	180	max.	Volts
Heater Positive with respect to Cathode	180	max.	Volts

LIMITING CIRCUIT VALUES

Grid 1 Circuit Resistance	1.5	max.	Megohms
Grid 2 Circuit Resistance (Note 1)	100000	min.	Ohms
Focus Electrode Circuit Resistance (Note 1)	100000	min.	Ohms

TYPICAL OPERATING CONDITIONS

Anode Voltage	12000	Volts
Grid 4 (Focus) Voltage	0 to 400	Volts
Grid 2 Voltage	300	Volts
Grid 1 Spot Cutoff Voltage	−35 to −75	Volts
Line Width (Note 2)	0.025	Inch

NOTES

1. Protective resistance in the Grid 2 and focus electrode circuits is adviseable to prevent damage to the tube.
2. Line width is measured by the shrinking raster method.

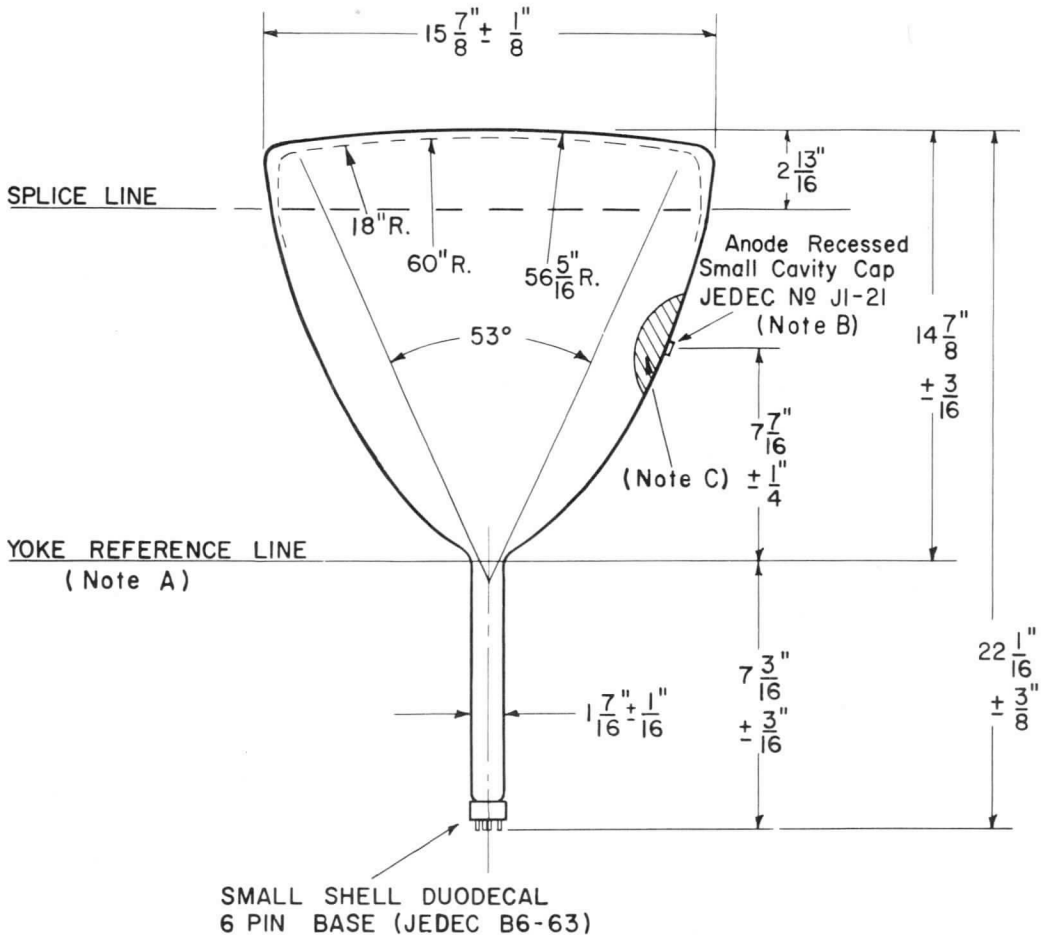

CE-A1316

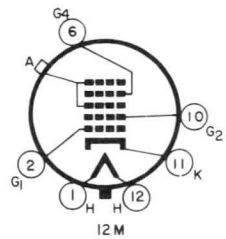

12M

OUTLINE NOTES

A. The Yoke Reference Line is determined by JEDEC Reference Line Gage No. 112.

B. The plane defined by the tube axis and pin position 3 will be within 30° of the plane defined by the tube axis and the anode terminal.

C. Anti-Corona Coating: Area concentric with anode terminal and having radius of 1½" minimum. Caution: Handling tube in coated area may impair its effectiveness.

The information contained herein is supplied without assuming responsibility for infringement of patents or other rights of third parties which may result from its use. No license is granted by implication or otherwise under any patent or patent rights of Westinghouse Electric Corporation.

Westinghouse

21EWP–

October 15, 1963

MILITARY & INDUSTRIAL CATHODE RAY TUBE TYPE 21EWP–

BASIC CHARACTERISTICS
21" Rectangular
Magnetic Focus
72° Magnetic Deflection
Aluminized

TYPICAL APPLICATIONS
Monitor

SPECIAL FEATURES
0.018" Line Width

ELECTRICAL

Cathode	Coated Unipotential
Heater:	
Voltage	6.3 Volts
Current	0.6 Ampere
Direct Interelectrode Capacitances:	
Grid 1 to all other Electrodes	6 pf
Cathode to all other Electrodes	5 pf
Focusing Method	Magnetic
Deflection	72° Magnetic

OPTICAL

Screen Phosphor	Note 1
Faceplate:	
Configuration	Spherical
Glass	Gray
Transmission	74%

MECHANICAL

Mounting Position	Any
Net Weight (Approx.)	25 Pounds

ABSOLUTE MAXIMUM RATINGS

Anode Voltage (Note 2)	22000 max.	Volts
Grid 2 Voltage	600 max.	Volts
Grid 1 Voltage:		
Negative Bias Value	180 max.	Volts
Positive Bias Value	0 max.	Volts
Positive Peak Value	0 max.	Volts
Peak Heater-Cathode Voltage:		
Heater Negative with respect to Cathode:		
During warm-up period of 15 sec. max.	410 max.	Volts
After Equipment warm-up period	180 max.	Volts
Heater Positive with respect to Cathode	180 max.	Volts

LIMITING CIRCUIT VALUES

Grid 1 Circuit Resistance	1.5 max.	Megohms
Grid 2 Circuit Resistance	See Note 3	
Focus Electrode Circuit Resistance	10000 min.	Ohms

TYPICAL OPERATING CONDITIONS

Anode Voltage (Note 2)	18000	16000	Volts
Grid 2 Voltage	300	300	Volts
Grid 1 Spot Cutoff Voltage	–33 to –75	–33 to –75	Volts
Line Width for P4 (Note 4)	0.018	0.018	Inch
Focusing Coil Current (Note 5)	115 ± 20%	108 ± 20%	Ma.
Spot Position (Note 6)			5/8"

NOTES

1: Westinghouse Military & Industrial Cathode Ray Tubes can be supplied with most of the standard JEDEC phosphors.

2: Operation with voltage in excess of 16 KV may require shielding to limit radiation of very soft x-rays.

3: A grid 2 circuit resistance of approximately 0.5 megohm should be provided.

4: Line width is measured by the shrinking raster method with current adjusted for a light output of 40 foot-lamberts on a 14" × 19" raster.

5: Current in JEDEC Focus Coil No. 109 located 3-1/4" from YRL & adjusted for optimum focus with anode current sufficient to give a light output of 40 foot-lamberts.

6: With the tube shielded against external magnetic fields, the undeflected focused spot lies within a circle of 5/8" radius concentric with the faceplate.

PRINTED IN U.S.A.

Military & Industrial Cathode Ray Tube Section
WESTINGHOUSE ELECTRIC CORPORATION, ELECTRONIC TUBE DIVISION, ELMIRA, NEW YORK

Westinghouse

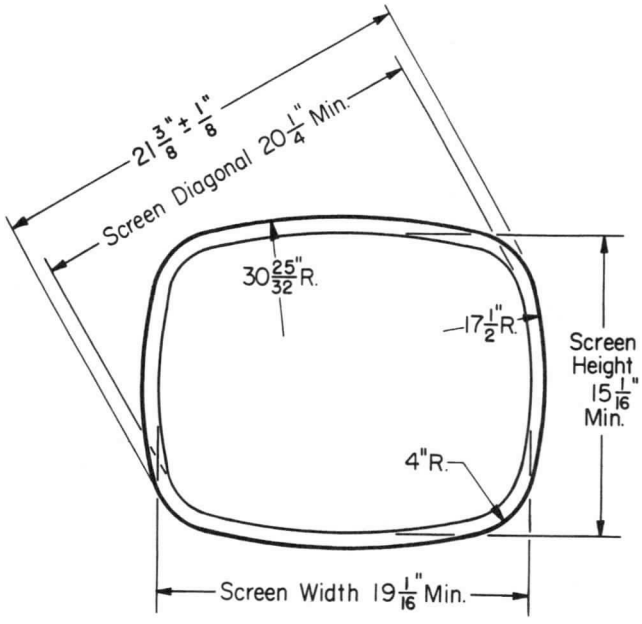

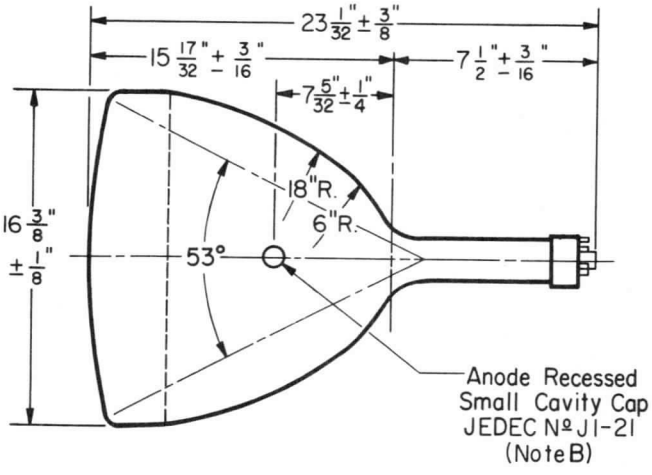

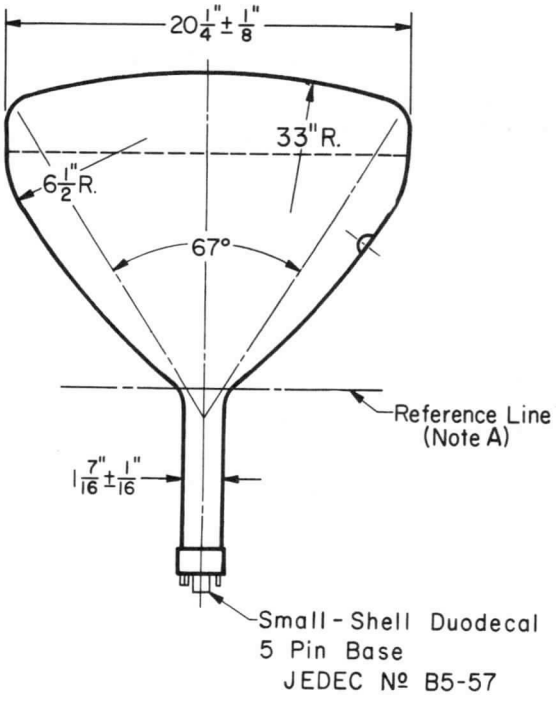

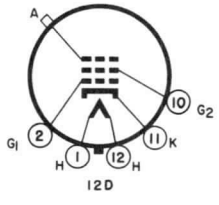

CE-C1465

A. The Yoke Reference Line is determined by JEDEC Reference Line Gage No. 110.

B. The plane defined by the tube axis and pin position 3 will be within 30° of the plane defined by the tube axis and the anode.

The information contained herein is supplied without assuming responsibility for infringement of patents or other rights of third parties which may result from its use. No license is granted by implication or otherwise under any patent or patent rights of Westinghouse Electric Corporation.

3" MILITARY & INDUSTRIAL CATHODE RAY TUBE TYPE WX-4127P

Basic Characteristics	Typical Applications	Special Features
3" Dia. Flat Face 35° Magnetic Deflection High Voltage Electrostatic Focus Aluminized	Photographic Recording	0.0014" Line Width

ELECTRICAL

Cathode	Coated Unipotential
Heater:	
Voltage	6.3 Volts
Current	0.6 Ampere
Direct Interelectrode Capacitances:	
Grid 1 to all other Electrodes	9 pF
Grid 2 to all other Electrodes	7 pF
Cathode to all other Electrodes	7 pF
Focusing Method	Electrostatic
Deflection	35° Magnetic

OPTICAL

Screen Phosphor	Note 1
Faceplate:	
Configuration	Flat
Glass	Clear
Transmission	90%
Index of Refraction	1.56

MECHANICAL

Mounting Position	Any
Net Weight (Approx)	1 Pound

Δ The WX- number identifies a specific laboratory design; the design and, consequently, the data and type number are subject to change. No obligations are assumed to manufacture this particular device in the future unless otherwise arranged. These drawings and specifications are the property of Westinghouse Electric Corporation, Electronic Tube Division, and shall not be reproduced or copied or used as the basis for the manufacture or sale of apparatus and/or devices without permission.

ABSOLUTE MAXIMUM RATINGS

Anode Voltage (Note 2)	22000 max. Volts
Grid 3 (Focus) Voltage (Note 3)	5000 max. Volts
Grid 2 Voltage	600 max. Volts
Grid 1 Voltage:	
Negative Bias Value	180 max. Volts
Positive Bias Value	0 max. Volts
Positive Peak Value	0 max. Volts
Peak Heater-Cathode Voltage:	
Heater Negative with respect to Cathode:	
During warm-up period of 15 sec. max.	410 max. Volts
After Equipment warm-up period	180 max. Volts
Heater Positive with respect to Cathode	180 max. Volts

LIMITING CIRCUIT VALUES

Grid 1 Circuit Resistance	1.5 max. Megohms
Grid 2 Circuit Resistance	See Note 4

TYPICAL OPERATING CONDITIONS

Anode Voltage (Note 2)	10000 Volts
Grid 3 (Focus) Voltage (Note 3)	1900 to 2300 Volts
Grid 2 Voltage	300 Volts
Grid 1 Spot Cutoff Voltage	-40 to -70 Volts
Line Width for P11 (Note 5)	0.0014 Inch
Spot Position (Note 6)	5 mm

NOTES

1. Westinghouse Military & Industrial Cathode Ray Tubes can be supplied with most of the standard JEDEC phosphors.

2. Operation with voltage in excess of 16KV may require shielding to limit radiation of very soft X-rays.

3. The grid 3 electrode may draw a peak current of 2 milliamperes with a representative value of 300 microamperes under normal operation.

4. A grid 2 circuit resistance of approximately 0.5 megohm should be provided. In addition it is recommended that a suitable device be used to limit grid 2 voltage to the maximum rated value to prevent tube damage in case of a momentary arc.

5. Line width is defined as the distance between the half-amplitude points of the light-energy distribution of the line and is measured with a peak current of 4 microamperes, using the slit-scan technique described in Ⓦ reprint #5510. Line width with other phosphors may vary slightly. Dynamic focus modulation is necessary to maintain optimum resolution over entire face. Close control of supply regulation and ripple is necessary to ensure optimum focus. Typically, a 0.1% change in focus or anode voltage, from best value, will increase spot size approximately 10%.

6. With the tube shielded against external magnetic fields, the undeflected focused spot lies within a circle of 5 mm radius concentric with the faceplate.

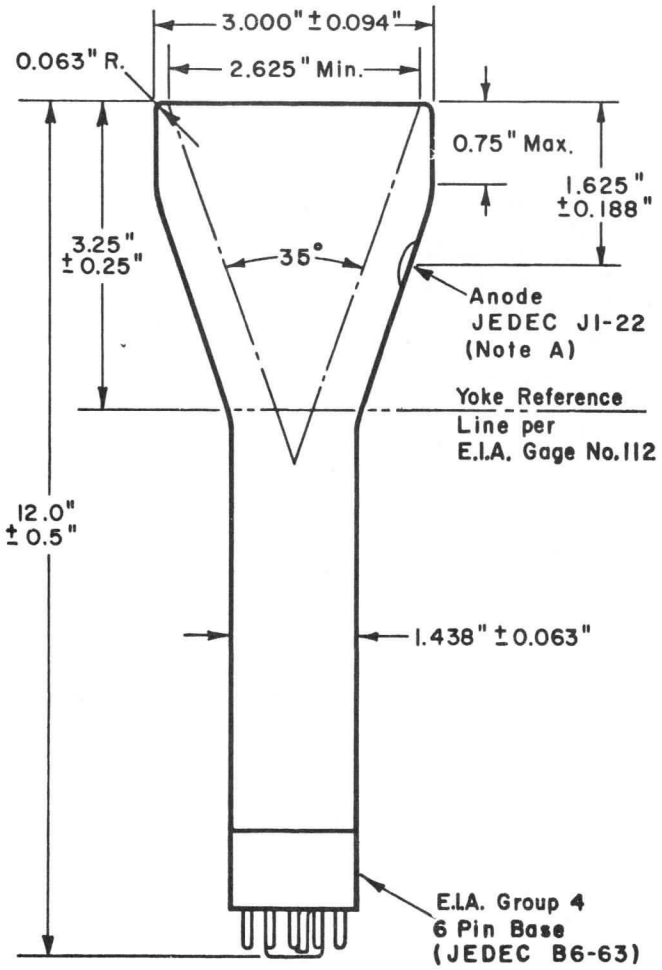

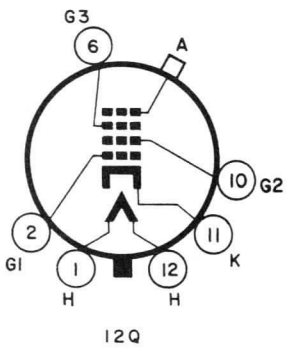

OUTLINE NOTE

A. The plane defined by the tube axis and pin position 3 will be within 10° of the plane defined by the tube axis and the anode.

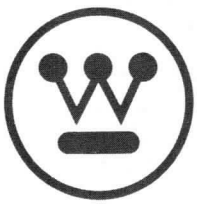

PRINTED IN U.S.A.

WESTINGHOUSE ELECTRIC CORPORATION, ELECTRONIC TUBE DIVISION, ELMIRA, NEW YORK

5" MILITARY & INDUSTRIAL CATHODE RAY TUBE TYPE WX-4129P-

Basic Characteristics	Typical Applications	Special Features
5" Round Flat Face 42° Magnetic Deflection Electrostatic Focus	Photographic Recording	0.0015" Line Width Double Axis, Micro-Deflection

ELECTRICAL

Cathode	Coated Unipotential
Heater:	
Voltage	6.3 Volts
Current	0.6 Ampere
Direct Interelectrode Capacitances:	
Grid 1 to all other Electrodes	9 pf
Grid 2 to all other Electrodes	7 pf
Cathode to all other Electrodes	7 pf
D1 to D2	5 pf
D3 to D4	5 pf
D1 to all other Electrodes except D2	8 pf
D2 to all other Electrodes except D1	7 pf
D3 to all other Electrodes except D4	7 pf
D4 to all other Electrodes except D3	7 pf
Focusing Method	Electrostatic
Deflection	42° Magnetic
Micro-Deflection	Electrostatic

OPTICAL

Screen Phosphor	Note 1
Faceplate:	
Configuration (Note 2)	Flat
Glass	Neutral Gray
Transmission	75%
Index of Refraction	1.52

MECHANICAL

Mounting Position	Any
Screen Diameter	4 1/4" Min.
Bulb Diameter	5 1/4" ± 1/8"
Overall Length	14" ± 1/2"
Anode Terminal	Potted Lead
Base	Small Shell Duodecal
Net Weight	30 Ounces

Δ The WX- number identifies a specific laboratory design; the design and, consequently, the data and type number are subject to change. No obligations are assumed to manufacture this particular device in the future unless otherwise arranged. These drawings and specifications are the property of Westinghouse Electric Corporation, Electronic Tube Division, and shall not be reproduced or copied or used as the basis for the manufacture or sale of apparatus and/or devices without permission.

Westinghouse

DEVELOPMENTAL DEVICE
Tentative Data

MAXIMUM RATINGS

Absolute Maximum Values

Anode Voltage	12500 max. Volts
Grid 3 (Focus) Voltage (Note 3)	5000 max. Volts
Grid 2 Voltage	600 max. volts
Grid 1 Voltage:	
Negative Bias Value	180 max. Volts
Positive Bias Value	0 max. Volts
Positive Peak Value	0 max. Volts
Peak Heater-Cathode Voltage:	
Heater Negative with respect to Cathode:	
During warm-up period of 15 sec. max.	410 max. Volts
After Equipment warm-up period	180 max. Volts
Heater Positive with respect to Cathode	180 max. Volts

LIMITING CIRCUIT VALUES

Grid 1 Circuit Resistance	1.5 max. Meghoms
Grid 2 Circuit Resistance	See Note 4

TYPICAL OPERATING CONDITIONS

Anode Voltage	10000 Volts
Grid 3 (Focus) Voltage (Note 3)	2200 to 2700 Volts
Grid 2 Voltage	300 Volts
Grid 1 Spot Cutoff Voltage	-35 to -70 Volts
Line Width with P16 (Note 5)	0.0015 Inch
Spot Position (Note 6)	5 mm
Micro-Deflection Sensitivity (Note 7)	0.0013"/Volt

NOTES

1. Westinghouse Military & Industrial Cathode Ray Tubes can be supplied with most of the standard JEDEC phosphors.
2. The faceplate is a ground and polished flat plate 0.245" ± 0.005" thick with a max. deviation from mean thickness for individual plates of 0.001". Maximum deviation from flatness is 0.006" within a circle of 4 1/4 diameter centered on the tube axis.
3. The grid 3 electrode may draw a peak current of 2 milliamperes with a representative value of 300 microamperes under normal operation. Regulation of grid 3 voltage should be held to 0.1% and ripple limited to 5 volts peak-to-peak.
4. A grid 2 circuit resistance of approximately 0.5 megohm should be provided.
5. Line width is defined as the distance between the half-amplitude points of the light-energy distribution of the line and is measured with a peak current of 2 microamperes, using the slit-scan technique described in Ⓦ reprint #5510. Line width with other phosphors may vary slightly.
6. With the tube shielded against external magnetic fields, the undeflected focused spot lies within a circle of 5 mm radius concentric with the faceplate.
7. Deflection voltages must be balanced around the center focus voltage, with the center value of deflection well clamped to the focus voltage. Deflection in excess of 0.075" may result in excessive spot distortion.

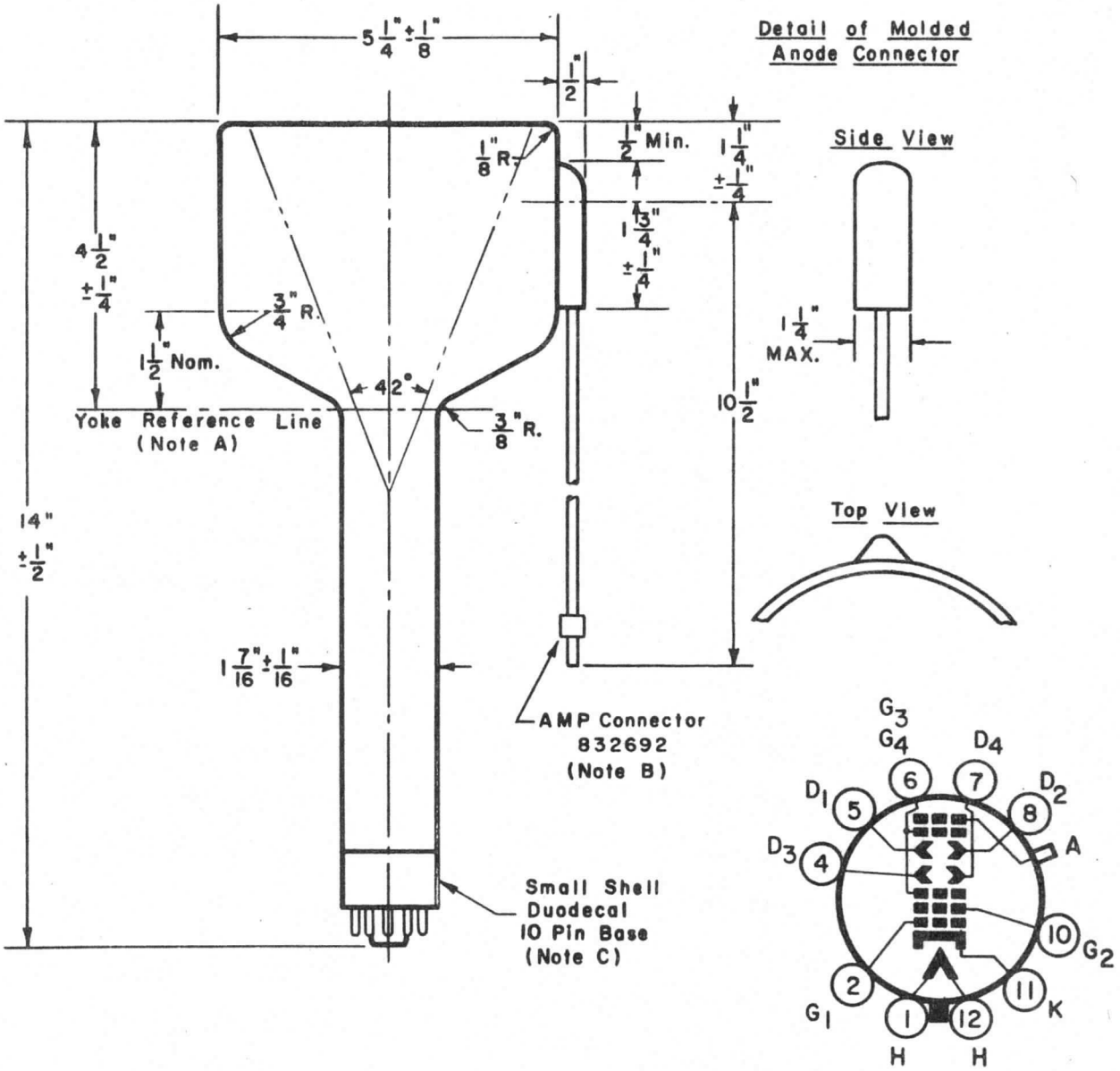

A. The Yoke Reference Line is determined by JEDEC Reference Line Gage No. 112.
B. The plane defined by the tube axis and pin position 3 will be within 10° of the plane defined by the tube axis and the anode Terminal potting.
C. D1-D2 trace alinement with base pin position 5 and tube axis has an angular tolerance of 10°. Angle between D1-D2 trace and D3-D4 trace is 90° ± 1°. Positive voltage on D1 (pin 5) will move spot toward pin 5. Positive voltage on D3 (pin 4) will move spot toward pin 2.

5" INDUSTRIAL & MILITARY CATHODE RAY TUBE TYPE WX-4439P-

Basic Characteristics	Typical Applications	Special Features
5" Round Flat Faceplate 42° Magnetic Deflection Aluminized	Photographic Recording Precision Radar Flying Spot Scanning	0.0017" Spot Diameter

ELECTRICAL

Cathode	Coated Unipotential
Heater:	
Voltage	6.3 Volts
Current	0.6 Ampere
Direct Interelectrode Capacitances:	
Grid 1 to all other Electrodes	9 pF
Grid 2 to all other Electrodes	7 pF
Cathode to all other Electrodes	7 pF
Focusing Method	Magnetic
Deflection	42° Magnetic

OPTICAL

Screen Phospor	Note 1
Faceplate:	
Configuration (Note 2)	Flat
Glass	Clear, Non-Browning
Transmission	91%
Index of Refraction	1.52±0.01

MECHANICAL

Mounting Position	Any
Net Weight	2.2 Pounds

ABSOLUTE MAXIMUM RATINGS

Anode Voltage (Note 3)	22000 max. Volts
Grid 2 Voltage	600 max. Volts
Grid 1 Voltage:	
Negative Bias Value	180 max. Volts
Positive Bias Value	0 max. Volts
Positive Peak Value	0 max. Volts
Peak Heater-Cathode Voltage:	
Heater Negative with respect to Cathode:	
During warm-up period of 15 sec. max.	410 max. Volts
After equipment warm up	180 max. Volts
Heater Positive with respect to Cathode	180 max. Volts

Δ The WX- number identifies a specific laboratory design; the design and, consequently, the data and type number are subject to change. No obligations are assumed to manufacture this particular device in the future unless otherwise arranged. These drawings and specifications are the property of Westinghouse Electric Corporation, Electronic Tube Division, and shall not be reproduced or copied or used as the basis for the manufacture or sale of apparatus and/or devices without permission.

Westinghouse TENTATIVE DATA

LIMITING CIRCUIT VALUES

Grid 1 Circuit Resistance	1.5	max. Megohms
Grid 2 Circuit Resistance		See Note 4

TYPICAL OPERATION & PERFORMANCE

Anode Voltage (Note 3)	18000	20000 Volts
Grid 2 Voltage	300	300 Volts
Grid 1 Spot Cutoff Voltage . .	35 to -75	-35 to -75 Volts
Max. Spot Diameter with P11 (Note 5)		0.0017 Inch
Spot Position (Note 6)		7.5 mm

NOTES

1. Westinghouse Military & Industrial Cathode Ray Tubes can be supplied with most of the standard JEDEC phosphors.
2. The faceplate is a ground and polished flat plate 0.245" ± 0.005" thick with a max. deviation from mean thickness for individual plates of 0.001". Maximum deviation from flatness is 0.006" within a circle of 4.25" diameter centered on the tube axis.
3. Operation with voltage in excess of 16KV may require shielding to limit radiation of very soft X-rays.
4. A grid 2 circuit resistance of approximately 0.5 megohm should be provided. In addition it is recommended that a suitable device be used to limit grid 2 voltage to the maximum rated value to prevent tube damage in case of a momentary arc.
5. Line width is defined as the distance between the half-amplitude points of the light-energy distribution of the line and is measured with a peak screen current of approximately 10 microamperes, using the slit-scan technique described in Ⓜ reprint #5510. Line width with other phosphers may vary slightly.
6. With the tube shielded against external magnetic fields, the undeflected focused spot lies within a circle of 7.5 mm radius concentric with the faceplate.

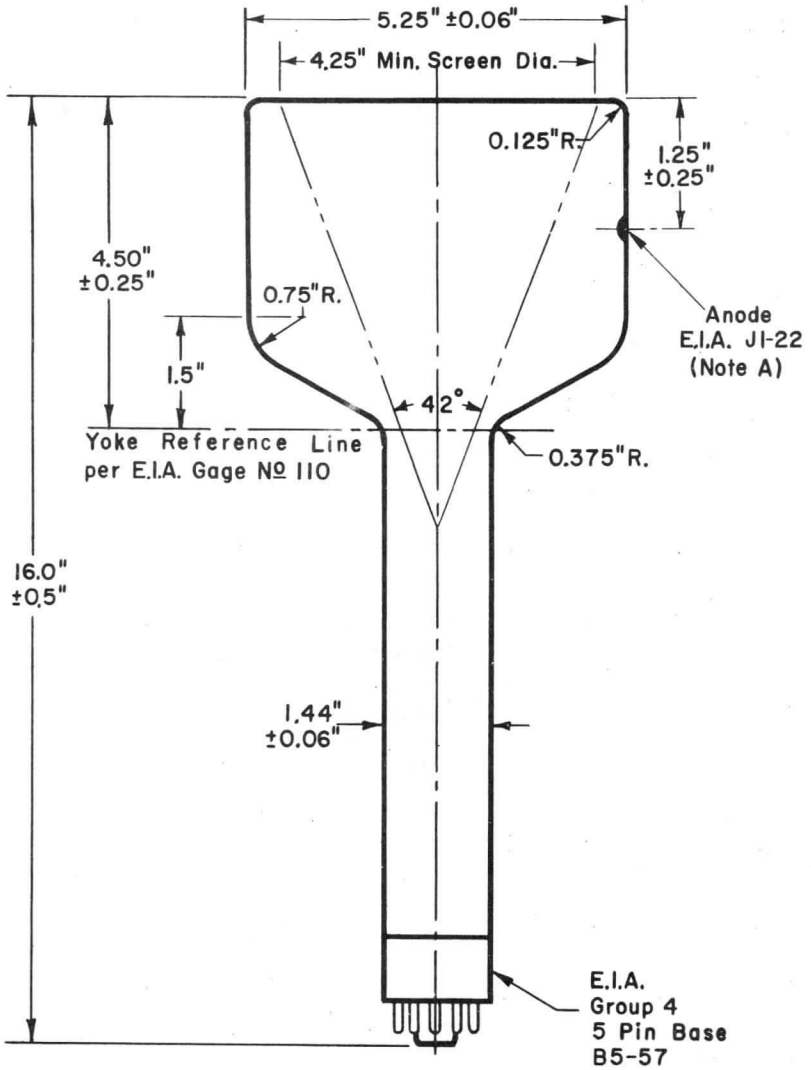

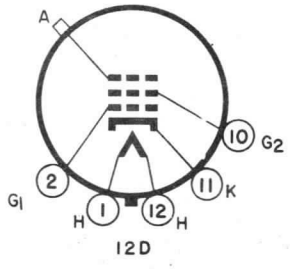

A. The plane defined by the tube axis and pin position 3 will be within 30° of the plane defined by the tube axis and the anode.



WESTINGHOUSE ELECTRIC CORPORATION, ELECTRONIC TUBE DIVISION, ELMIRA, NEW YORK

Westinghouse
ELECTRONIC TUBE DIVISION, ELMIRA, NEW YORK

1 1/2" MILITARY & INDUSTRIAL CATHODE RAY TUBE TYPE WX-4497P-

Basic Characteristics	Typical Applications	Special Features
1 1/2" Round Glass 30° Magnetic Deflection Electrostatic Focus	Photographic Recording	0.00075" Line Width Flat Faceplate Aluminized Screen

ELECTRICAL

Cathode	Coated Unipotential
Heater:	
Voltage	6.3 Volts
Current	0.60 Ampere
Direct Interelectrode Capacitances:	
Grid 1 to all other Electrodes	9 pf
Grid 2 to all other Electrodes	7 pf
Cathode to all other Electrodes	7 pf
Focusing Method	Electrostatic
Deflection	30° Magnetic

OPTICAL

Screen Phosphor	Note 1
Faceplate:	
Configuration (Note 2)	Flat
Glass	Clear
Index of Refraction	1.52

MECHANICAL

Mounting Position	Any
Screen Diameter	1" Min.
Bulb Diameter	1 7/16" ± 1/16"
Overall Length	11 3/4" ± 1/4"
Anode Terminal	Potted Lead
Base	Small Shell Duodecal

MAXIMUM RATINGS

Absolute Maximum Values

Anode Voltage	12000 max. Volts
Grid 3 (Focus) Voltage (Note 3)	2750 max. Volts
Grid 2 Voltage	500 max. Volts
Grid 1 Voltage:	
Negative Bias Value	180 max. Volts
Positive Bias Value	0 max. Volts
Positive Peak Value	0 max. Volts

Δ The WX- number identifies a specific laboratory design; the design and, consequently, the data and type number are subject to change. No obligations are assumed to manufacture this particular device in the future unless otherwise arranged. These drawings and specifications are the property of Westinghouse Electric Corporation, Electronic Tube Division, and shall not be reproduced or copied or used as the basis for the manufacture or sale of apparatus and/or devices without permission.

Westinghouse DEVELOPMENTAL DEVICE
Tentative Data

Peak Heater-Cathode Voltage:
Heater Negative with respect to Cathode:
During warm-up period of 15 sec. max. . 410 max. Volts
After Equipment warm-up period. . . . . 180 max. Volts
Heater Positive with respect to Cathode. . 180 max. Volts

LIMITING CIRCUIT VALUES
Grid 1 Circuit Resistance. . . . . 1.5 max. Megohms
Grid 2 Circuit Resistance. . . . . See Note 4

TYPICAL OPERATING CONDITIONS
Anode Voltage. . . . . 10000 Volts
Grid 3 (Focus) Voltage (Note 3). . . . . 2000 to 2500 Volts
Grid 2 Voltage. . . . . 300 Volts
Grid 1 Spot Cutoff Voltage. . . . . -35 to -75 Volts
Line Width for P11 (Note 5) . . . . . 0.00075 Inch
Spot Position (Note 6). . . . . 2 mm.

NOTES

1. Westinghouse Military & Industrial Cathode Ray Tubes can be supplied with most of the standard JEDEC phosphors.

2. The faceplate is a ground and polished flat plate 0.125" ± 0.020" thick. Maximum deviation from flatness is 0.001" within a circle of 1" diameter centered on the tube axis.

3. The grid 3 electrode may draw a peak current of 2 milliamperes with a representative value of 300 microamperes under normal operation.

4. A grid 2 circuit resistance of approximately 0.5 megohm should be provided. In addition it is recommended that a suitable device be used to limit grid 2 voltage to the maximum rated value to prevent tube damage in case of a momentary arc.

5. Line width is defined as the distance between the half-amplitude points of the light-energy distribution of the line and is measured with a peak current 2 microamperes, using the slit-scan technique described in Ⓦ reprint #5510. Line width with other phosphors may vary slightly. Dynamic focus modulation is necessary to maintain optimum resolution over entire face. Close control of supply regulation and ripple is necessary to ensure optimum focus. Typically, a 0.1% change in focus or anode voltage, from best value, will increase spot size approximately 10%.

6. With the tube shielded against external magnetic fields, the undeflected focused spot lies within a circle of 2 mm radius concentric with the faceplate.

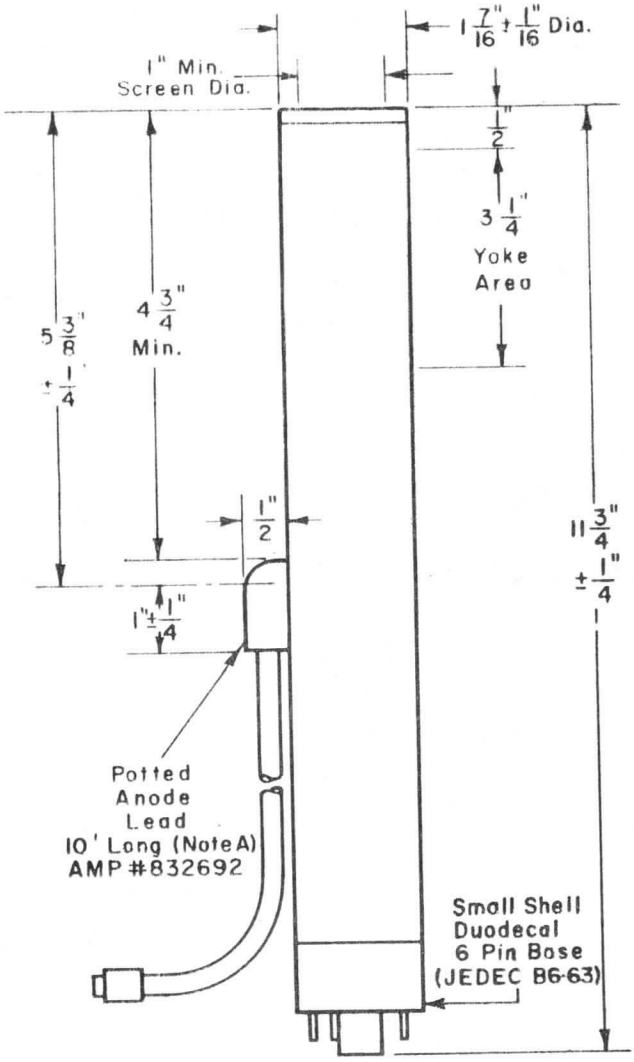

OUTLINE NOTE

A. The plane defined by the tube axis and pin position 3 will be within 10° of the plane defined by the tube axis and the anode.

Westinghouse

DEVELOPMENTAL DEVICE
Tentative Data

WX- 4527-P

March 6, 1961

MINIATURE DISPLAY TUBE TYPE WX-4527-P

The WX-4527-P is a very compact high resolution display tube having a 0.6" screen diameter and an overall length of 7". This type has electrostatic focus and magnetic deflection of approximately 34°. The aluminized screen is cataphoretically deposited enabling a resolution of 800 to 1000 lines per diameter to be achieved. All electrode terminals are flying leads.

The WX-4527-P is suitable for use in a compact, portable, high resolution display device. Used with a 10 power magnifying ocular eyepiece permits construction of a hand held, light weight, large screen display device.

ELECTRICAL:

Cathode	Coated Unipotential	
Heater:		
Voltage	6.3	Volts
Current	0.60	Ma.
Screen: (Note 1)		
Phosphor	Aluminized P11	
Fluorescence	Blue	
Phosphorescence	Blue	
Persistence	Short	
Focusing Method	Electrostatic	
Deflection Method	Magnetic	
Deflection Angle (Approx.)	34°	

MECHANICAL:

Mounting Position	Any
Min. Screen Diameter	0.6"
Faceplate Configuration	Flat
Faceplate Diameter (Max.)	0.9"
Yoke Inside Diameter (Min.)	0.9"
Max. Tube Diameter	1-1/8"
Overall Length	7"
All Electrode Terminals	Potted Leads

Δ The WX- number identifies a specific laboratory design; the design and, consequently, the data and type number are subject to change. No obligations are assumed to manufacture this particular device in the future unless otherwise arranged. These drawings and specifications are the property of Westinghouse Electric Corporation, Electronic Tube Division, and shall not be reproduced or copied or used as the basis for the manufacture or sale of apparatus and/or devices without permission.

WESTINGHOUSE ELECTRIC CORPORATION, ELECTRONIC TUBE DIVISION, ELMIRA, NEW YORK

Los Angeles 17, California
600 St. Paul Avenue
Phone HUntley 2-9660

San Lorenzo, California
2222 Grant Avenue
Phone EXbrook 2-5353

Elmira, New York
Box 284
Phone REgent 9-3611

Washington 6, D.C.
1625 K Street N.W.
Phone NAtional 8-8843

Chicago 9, Illinois
2211 W. Pershing Road
Phone WHitehall 4-3860

Boston, Massachusetts
10 High Street
Phone LIberty 2-0600

Detroit 32, Michigan
Box 502, 5757 Trumbull Ave.
Phone TRinity 2-7010

Bloomfield, New Jersey
MacArthur Avenue
Phone HUmbolt 4-3000

MAXIMUM RATINGS:

Anode Voltage	10000	max.	Volts
Focus Voltage	2000	max.	Volts
Grid 2 Voltage	500	max.	Volts
Line Width (Note 2)	0.001	max.	Inch

OPERATIONAL:

Anode Voltage		6000	Volts
Focus Voltage		1200	Volts
Grid 2 Voltage		300	Volts
Grid 1 Spot Cutoff Voltage	-35	to -75	Volts
Line Width (Note 2)		0.0007	Inch

NOTES

1. Other JEDEC registered screens are available.

2. Line width is measured at the half amplitude points of the light energy distribution of the line by the line-slit method. This line width is equivalent to approximately 900 bits/line.

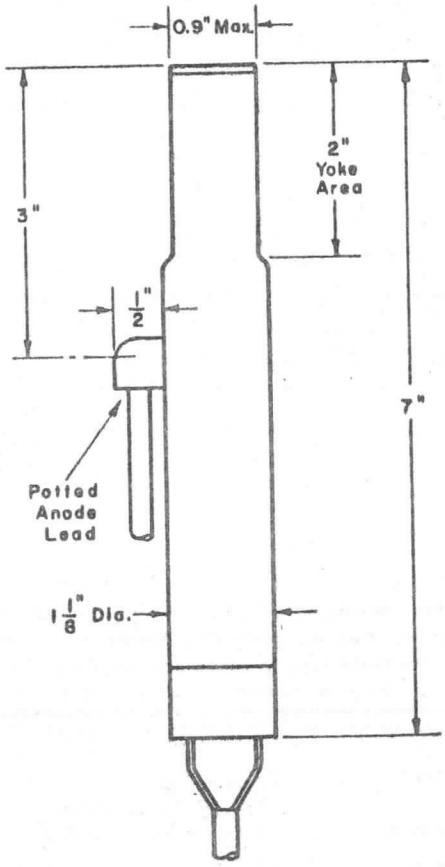

Westinghouse

Industrial & Military CRT

Type: WX-4541P- ★

Compact, Ruggedized
Low Voltage Focus, Magnetic Deflection
7″ Round Spherical Faceplate
Line Width = 0.012″ (0.30mm)

Basic Characteristics
7″ (178mm) Round Faceplate
Electrostatic Focus
70° Magnetic Deflection
Aluminized

Typical Applications
Monitor
Radar Display

Special Features
Spot Diameter 0.012″ (0.30mm)
0.87″ (22.1mm) Dia. Neck for Low Deflection Power
Light Weight, Ruggedized

Electrical

Cathode	Coated Unipotential
Heater:	
Voltage	6.3 Volts
Current	0.3 Ampere
Direct Interelectrode Capacitances:	
Grid 1 to All Other Electrodes	9 pF
Grid 2 to All Other Electrodes	7 pF
Cathode to All Other Electrodes	7 pF
Focusing Method	Electrostatic
Deflection	70° Magnetic

Optical

Screen Phosphor	Note 1
Faceplate:	
Configuration	Spherical
Glass	Clear
Transmission	92%
Index of Refraction	1.51

Mechanical

Mounting Position	Any
Net Weight	2.25 Pounds

Environmental

The WX-4541P- will meet the requirements of MIL-E-5422 paragraph 4.2.1.1 increased in severity as follows:

1. In curve 1, Figure 2, double amplitude shall be 0.120″ (3.05mm) from 5 to 55 hertz.
2. Acceleration level shall be ±20 G's from 55 to 500 hertz.

Absolute Maximum Ratings

Anode Voltage	15000 max.	Volts
Grid 4 (Focus) Voltage	1000 max.	Volts
Grid 2 Voltage	600 max.	Volts
Grid 1 Voltage:		
Negative Bias Value	180 max.	Volts
Positive Bias Value	0 max.	Volts
Positive Peak Value	0 max.	Volts
Peak Heater-Cathode Voltage:		
Heater Negative with respect to Cathode:		
During Warm-up Period of 15 sec. max.	410 max.	Volts
After Equipment Warm-up Period	180 max.	Volts
Heater Positive with respect to Cathode:		
Peak	180 max.	Volts
DC	25 max.	Volts

Limiting Circuit Values

Grid 1 Circuit Resistance	1.5 max.	Megohms
Grid 2 Circuit Resistance (Approx.)	0.5	Megohms
Focus Electrode Circuit Resistance	10000 min.	Ohms

Typical Operating Conditions & Performance Limits

Anode Voltage	8000	Volts
Grid 4 (Focus) Voltage	0 to 300	Volts
Grid 2 Voltage	300	Volts
Grid 1 Spot Cutoff Voltage (Max.)	−60	Volts
Spot Diameter (Note 2)	0.012	Inch
	0.30	mm
Spot Position (Note 3)	6	mm

Notes

1. Westinghouse Military & Industrial Cathode Ray tubes can be supplied with most of the standard JEDEC phosphors.
2. Spot diameter is measured with a beam current of 50 microamperes by visual observation of a test pattern.
3. With the tube shielded against external magnetic fields, the undeflected focused spot lies within a circle of 6 mm radius concentric with the faceplate.

★ The WX-number identifies a specific laboratory design; the design and, consequently, the data and type number are subject to change. No obligations are assumed to manufacture this particular device in the future unless otherwise arranged. These drawings and specifications are the property of Westinghouse Electric Corporation, Electronic Tube Division, and shall not be reproduced or copied or used as the basis for the manufacture or sale of apparatus and/or device without permission.

November 1970
Supersedes WX-4541P- dated November 13, 1964
TC—2236-2

Industrial & Military CRT

Type: WX-4541P-

Compact, Ruggedized
Low Voltage Focus, Magnetic Deflection
7" Round Spherical Faceplate
Line Width = 0.012" (0.30mm)

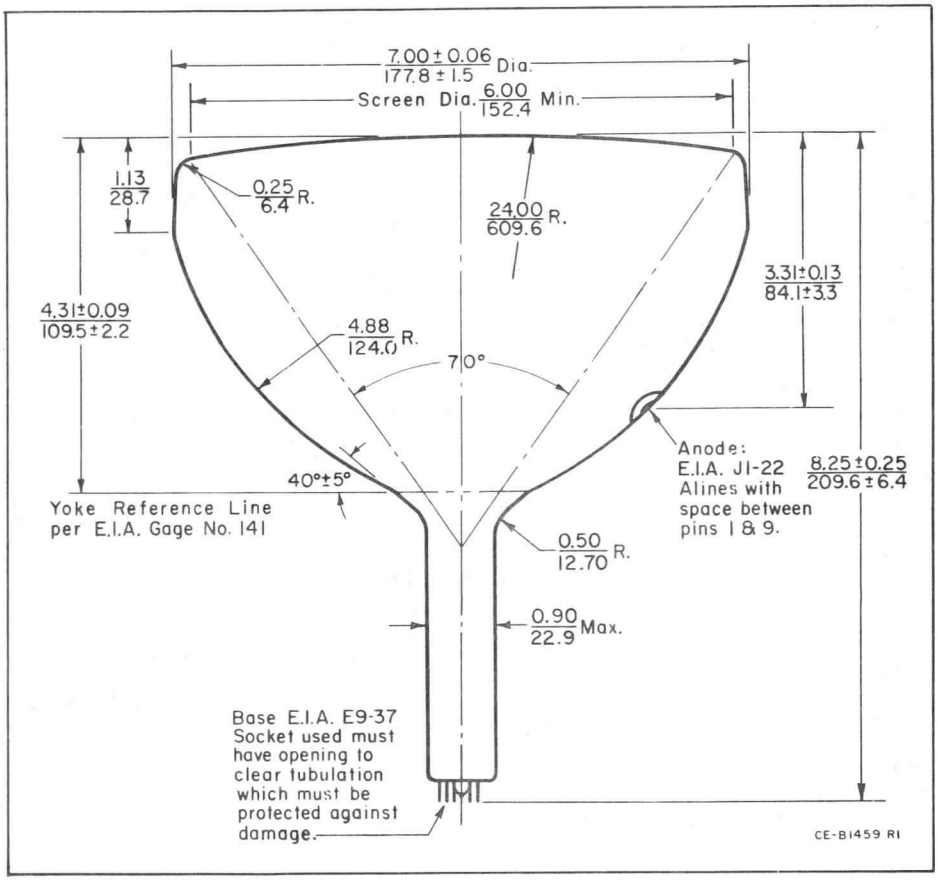

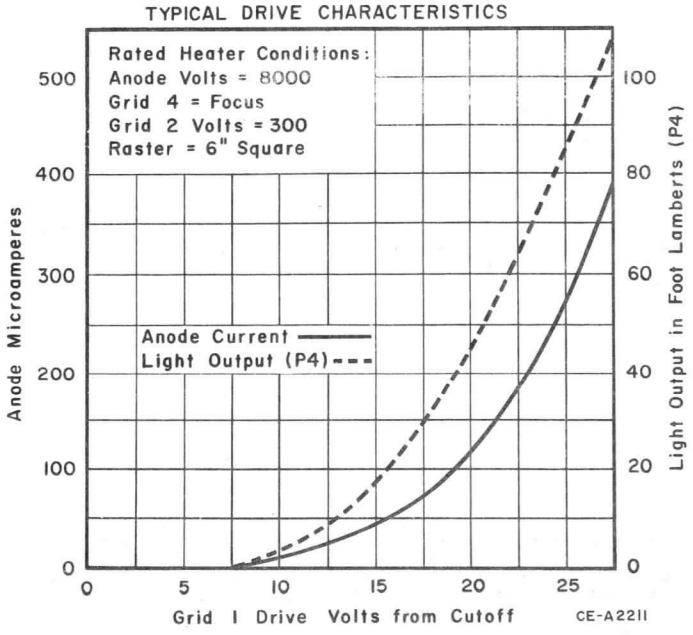

(Dimensions in $\frac{\text{inches}}{\text{mm}}$ unless otherwise shown) The millimeter dimensions are derived from the original inch dimensions, 1" = 25.4 mm exactly.

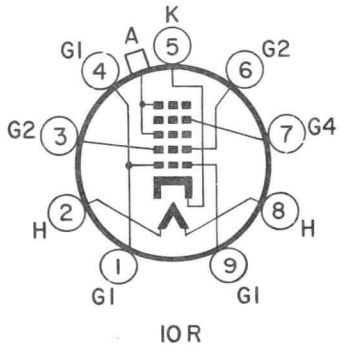

Westinghouse Electric Corporation
Electronic Tube Division, Elmira, N. Y. 14902
Printed in U.S.A.

7" MILITARY & INDUSTRIAL CATHODE RAY TUBE TYPE WX-4595P-

Basic Characteristics	Typical Applications	Special Features
7" Round Faceplate Electrostatic Focus 50° Magnetic Deflection Aluminized Screen	Visual Indicator Radar Character Display	0.00275" Line Width Double Axis Micro-deflection

ELECTRICAL

Cathode	Coated Unipotential
Heater:	
Voltage	6.3 Volts
Current	0.600 Ampere
Direct Interelectrode Capacitances:	
Grid 1 to all other Electrodes	9 pf
Grid 2 to all other Electrodes	7 pf
Cathode to all other Electrodes	7 pf
D1 to D2	5 pf
D3 to D4	5 pf
D1 to all other Electrodes except D2	8 pf
D2 to all other Electrodes except D1	7 pf
D3 to all other Electrodes except D4	7 pf
D4 to all other Electrodes except D3	7 pf
Focusing Method	Electrostatic
Deflection	50° Magnetic
Micro-Deflection	Electrostatic

OPTICAL

Screen Phosphor	Note 1
Faceplate:	
Configuration	Spherical
Glass	Clear
Transmission	87%
Index of Refraction	1.51

MECHANICAL

Mounting Position	Any
Net Weight (Approx.)	3 Pounds
Bulb	JEDEC J57-1/2 C1

Δ The WX- number identifies a specific laboratory design; the design and, consequently, the data and type number are subject to change. No obligations are assumed to manufacture this particular device in the future unless otherwise arranged. These drawings and specifications are the property of Westinghouse Electric Corporation, Electronic Tube Division, and shall not be reproduced or copied or used as the basis for the manufacture or sale of apparatus and/or devices without permission.

ABSOLUTE MAXIMUM RATINGS

Anode Voltage (Note 2)	22000 max. Volts
Grid 3 (Focus) Voltage (Note 3)	5000 max. Volts
Grid 2 Voltage	600 max. Volts
Grid 1 Voltage:	
Negative Bias Value	180 max. Volts
Positive Bias Value	0 max. Volts
Positive Peak Value	0 max. Volts
Peak Heater-Cathode Voltage:	
Heater Negative with respect to Cathode:	
During warm-up period of 15 sec. max.	410 max. Volts
After Equipment warm-up period	180 max. Volts
Heater Positive with respect to Cathode	180 max. Volts
Peak Voltage between Grid 3 & any Deflecting Electrode	1000 max. Volts

LIMITING CIRCUIT VALUES

Grid 1 Circuit Resistance	1.5 max. Megohms
Grid 2 Circuit Resistance	See Note 4

TYPICAL OPERATING CONDITIONS

Anode Voltage (Note 2)	10000 Volts
Grid 3 (Focus) Voltage (Note 3)	2100 to 2400 Volts
Grid 2 Voltage	300 Volts
Grid 1 Spot Cutoff Voltage	-40 to -65 Volts
Line Width for P11 (Note 5)	0.00275 Inch
Spot Position (Note 6)	7.5 mm
Micro-Deflection Sensitivity (Note 7)	0.002"/Volt

NOTES

1. Westinghouse Military & Industrial Cathode Ray Tubes can be supplied with most of the standard JEDEC phosphors.
2. Operation with voltage in excess of 16KV may require shielding to limit radiation of very soft X-rays.
3. The grid 3 electrode may draw a peak current of 2 milliamperes with a representative value of 300 microamperes under normal operation.
4. A Grid 2 circuit resistance of approximately 0.5 megohm should be provided. In addition it is recommended that a suitable device be used to limit grid 2 voltage to the maximum rated value to prevent tube damage in case of a momentary arc.
5. Line width is defined as the distance between the half-amplitude points of the light-energy distribution of the line and is measured with a peak current of 4 microamperes, using the slit-scan technique described in Ⓦ reprint #5510. Line width with other phosphors may vary slightly. Dynamic focus modulation is necessary to maintain optimum resolution over entire face. Close control of supply regulation and ripple is necessary to ensure optimum focus. Typically, a 0.1% change in focus or anode voltage, from best value, will increase spot size approximately 10%.
6. With the tube shielded against external magnetic fields, the undeflected focused spot lies within a circle of 7.5 mm radius concentric with the faceplate.

7" MILITARY & INDUSTRIAL CATHODE RAY TUBE TYPE WX-4595P-

Basic Characteristics	Typical Applications	Special Features
7" Round Faceplate	Visual Indicator	0.00275" Line Width
Electrostatic Focus	Radar	Double Axis Micro-
50° Magnetic Deflection	Character Display	deflection
Aluminized Screen		

ELECTRICAL

Cathode	Coated Unipotential
Heater:	
Voltage	6.3 Volts
Current	0.600 Ampere
Direct Interelectrode Capacitances:	
Grid 1 to all other Electrodes	9 pf
Grid 2 to all other Electrodes	7 pf
Cathode to all other Electrodes	7 pf
D1 to D2	5 pf
D3 to D4	5 pf
D1 to all other Electrodes except D2	8 pf
D2 to all other Electrodes except D1	7 pf
D3 to all other Electrodes except D4	7 pf
D4 to all other Electrodes except D3	7 pf
Focusing Method	Electrostatic
Deflection	50° Magnetic
Micro-Deflection	Electrostatic

OPTICAL

Screen Phosphor	Note 1
Faceplate:	
Configuration	Spherical
Glass	Clear
Transmission	87%
Index of Refraction	1.51

MECHANICAL

Mounting Position	Any
Net Weight (Approx.)	3 Pounds
Bulb	JEDEC J57-1/2 C1

Δ The WX- number identifies a specific laboratory design; the design and, consequently, the data and type number are subject to change. No obligations are assumed to manufacture this particular device in the future unless otherwise arranged. These drawings and specifications are the property of Westinghouse Electric Corporation, Electronic Tube Division, and shall not be reproduced or copied or used as the basis for the manufacture or sale of apparatus and/or devices without permission.

ABSOLUTE MAXIMUM RATINGS

Anode Voltage (Note 2)	22000 max. Volts
Grid 3 (Focus) Voltage (Note 3)	5000 max. Volts
Grid 2 Voltage	600 max. Volts
Grid 1 Voltage:	
Negative Bias Value	180 max. Volts
Positive Bias Value	0 max. Volts
Positive Peak Value	0 max. Volts
Peak Heater-Cathode Voltage:	
Heater Negative with respect to Cathode:	
During warm-up period of 15 sec. max.	410 max. Volts
After Equipment warm-up period	180 max. Volts
Heater Positive with respect to Cathode	180 max. Volts
Peak Voltage between Grid 3 & any Deflecting Electrode	1000 max. Volts

LIMITING CIRCUIT VALUES

Grid 1 Circuit Resistance	1.5 max. Megohms
Grid 2 Circuit Resistance	See Note 4

TYPICAL OPERATING CONDITIONS

Anode Voltage (Note 2)	10000 Volts
Grid 3 (Focus) Voltage (Note 3)	2100 to 2400 Volts
Grid 2 Voltage	300 Volts
Grid 1 Spot Cutoff Voltage	-40 to -65 Volts
Line Width for P11 (Note 5)	0.00275 Inch
Spot Position (Note 6)	7.5 mm
Micro-Deflection Sensitivity (Note 7)	0.002"/Volt

NOTES

1. Westinghouse Military & Industrial Cathode Ray Tubes can be supplied with most of the standard JEDEC phosphors.
2. Operation with voltage in excess of 16KV may require shielding to limit radiation of very soft X-rays.
3. The grid 3 electrode may draw a peak current of 2 milliamperes with a representative value of 300 microamperes under normal operation.
4. A Grid 2 circuit resistance of approximately 0.5 megohm should be provided. In addition it is recommended that a suitable device be used to limit grid 2 voltage to the maximum rated value to prevent tube damage in case of a momentary arc.
5. Line width is defined as the distance between the half-amplitude points of the light-energy distribution of the line and is measured with a peak current of 4 microamperes, using the slit-scan technique described in Ⓦ reprint #5510. Line width with other phosphors may vary slightly. Dynamic focus modulation is necessary to maintain optimum resolution over entire face. Close control of supply regulation and ripple is necessary to ensure optimum focus. Typically, a 0.1% change in focus or anode voltage, from best value, will increase spot size approximately 10%.
6. With the tube shielded against external magnetic fields, the undeflected focused spot lies within a circle of 7.5 mm radius concentric with the faceplate.

7. Deflection voltage must be balanced around the center focus voltage with the center value of deflection voltage well clamped to the focus voltage. Deflection greater than ±0.150" without refocusing may result in 2:1 spot growth.

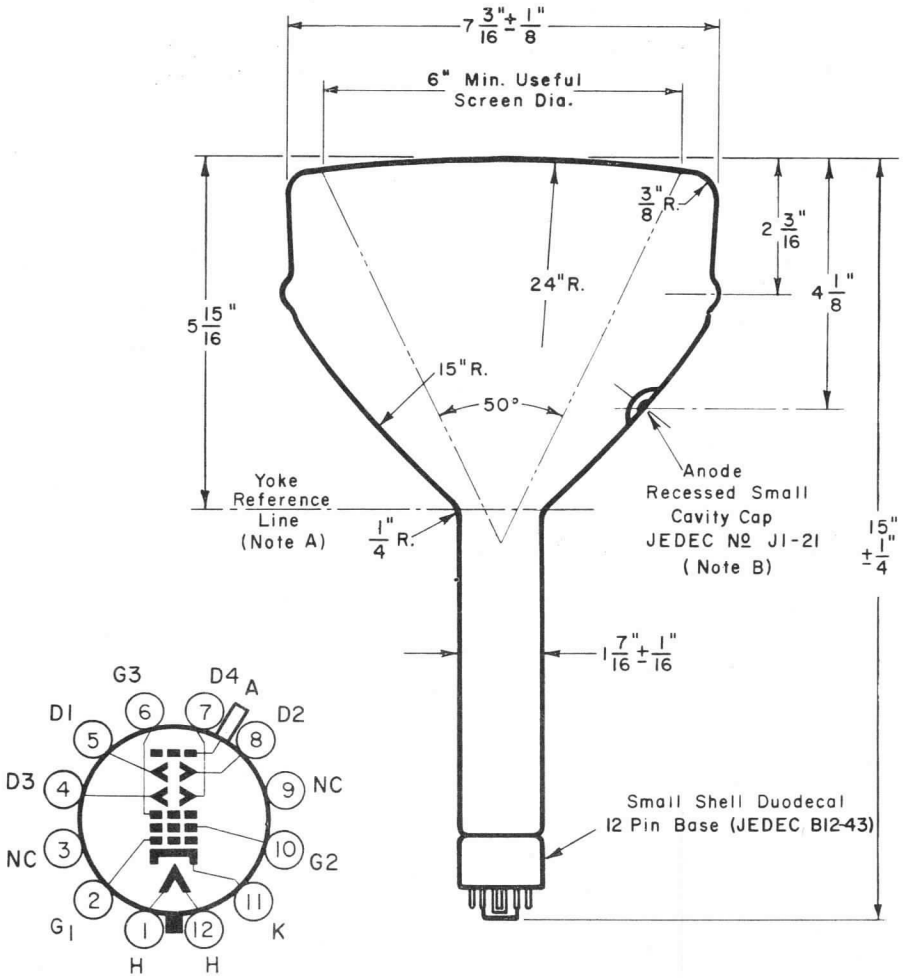

A. The Yoke Reference Line is determined by JEDEC Reference Line Gage No. 112.
B. The plane defined by the tube axis and pin position 3 will be within 10° of the plane defined by the tube axis and the anode.
C. D1-D2 trace alinement with plane defined by base pin position 5 and tube axis has an angular tolerance of 10°. Angle between D1-D2 trace and D3-D4 trace is 90° ± 1°. Positive voltage on D1 (pin 5) will move spot toward pin 5. Positive voltage on D3 (pin 4) will move spot toward pin 2.

7. Deflection voltage must be balanced around the center focus voltage with the center value of deflection voltage well clamped to the focus voltage. Deflection greater than ±0.150" without refocusing may result in 2:1 spot growth.

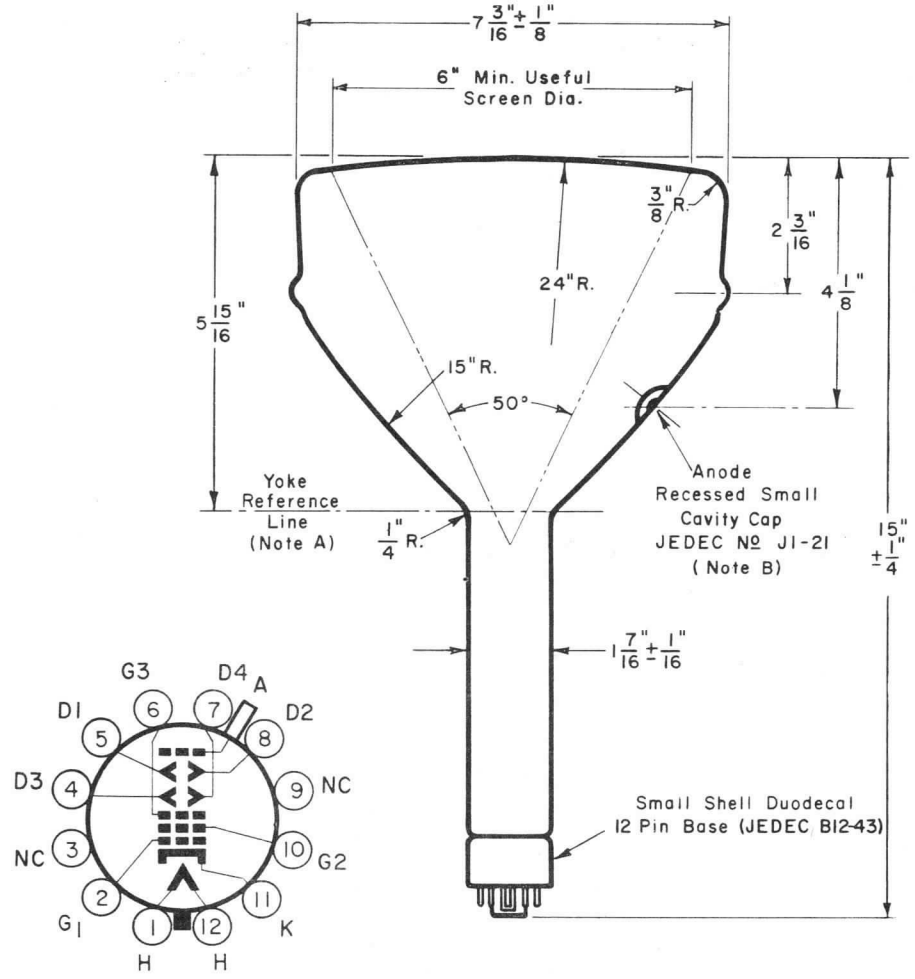

A. The Yoke Reference Line is determined by JEDEC Reference Line Gage No. 112.
B. The plane defined by the tube axis and pin position 3 will be within 10° of the plane defined by the tube axis and the anode.
C. D1-D2 trace alinement with plane defined by base pin position 5 and tube axis has an angular tolerance of 10°. Angle between D1-D2 trace and D3-D4 trace is 90° ± 1°. Positive voltage on D1 (pin 5) will move spot toward pin 5. Positive voltage on D3 (pin 4) will move spot toward pin 2.

5" MILITARY & INDUSTRIAL CATHODE RAY TUBE TYPES
WX-4647P- & WX-30164P-

Basic Characteristics	Typical Applications	Special Features
5" Round Flat Faceplate	Photographic Recording	0.001" Line Width
42° Magnetic Deflection	Precision Radar	Low Noise Phosphor
Aluminized	Single Line Display	

WX-30164P- is rated for 25KV max. Anode Voltage
WX-4647P- is rated for 12KV max. Anode Voltage

ELECTRICAL

Cathode	Coated Unipotential
Heater:	
Voltage	6.3 Volts
Current	0.60 Ampere
Direct Interelectrode Capacitances:	
Grid 1 to all other Electrodes	9 pf
Grid 2 to all other Electrodes	7 pf
Cathode to all other Electrodes	7 pf
Focusing Method	Electrostatic
Deflection	42° Magnetic

OPTICAL

Screen Phosphor	Note 1
Faceplate:	
Configuration (Note 2)	Flat
Glass	Non Browning
Transmission	87%
Index of Refraction	1.519

MECHANICAL

Mounting Position	Any
Net Weight	2.2 Pounds

Δ The WX- number identifies a specific laboratory design; the design and, consequently, the data and type number are subject to change. No obligations are assumed to manufacture this particular device in the future unless otherwise arranged. These drawings and specifications are the property of Westinghouse Electric Corporation, Electronic Tube Division, and shall not be reproduced or copied or used as the basis for the manufacture or sale of apparatus and/or devices without permission.

ABSOLUTE MAXIMUM RATINGS

Anode Voltage:	
WX-4647P-	12000 max. Volts
WX-30164P- (Note 3)	25000 max. Volts
Grid 3 (Focus) Voltage (Note 4):	
WX-4647P-	4000 max. Volts
WX-30164P-	8000 max. Volts
Grid 2 Voltage	600 max. Volts
Grid 1 Voltage:	
Negative Bias Value	180 max. Volts
Positive Bias Value	0 max. Volts
Positive Peak Value	0 max. Volts
Peak Heater-Cathode Voltage:	
Heater Negative with respect to Cathode:	
During warm-up period of 15 sec. max.	410 max. Volts
After Equipment warm-up period	180 max. Volts
Heater Positive with respect to Cathode	180 max. Volts

LIMITING CIRCUIT VALUES

Grid 1 Circuit Resistance	1.5 max. Megohms
Grid 2 Circuit Resistance	See Note 5

TYPICAL OPERATING CONDITIONS

Anode Voltage:	
WX-4647P-	10000 Volts
WX-30164P-	20000 Volts
Grid 3 (Focus) Voltage (Note 4):	
WX-4647P-	2370 to 2670 Volts
WX-30164P-	4740 to 5340 Volts
Grid 2 Voltage	300 Volts
Grid 1 Spot Cutoff Voltage	-40 to -65 Volts
Line Width for P16 (Note 6)	0.001 Inch
Spot Position (Note 7)	5 mm

NOTES

1. Westinghouse Military & Industrial Cathode Ray Tubes can be supplied with most of the standard JEDEC phosphors.

2. The faceplate is a ground and polished flat plate 0.275" ± 0.025" thick. Maximum deviation from flatness is 0.015" within a circle of 4 1/4" diameter centered on the tube axis.

3. Operation with voltage in excess of 16KV may require shielding to limit radiation of very soft X-rays.

4. The grid 3 electrode may draw a peak current of 2 milliamperes with a representative value of 300 microamperes under normal operation.

5. A grid 2 circuit resistance of approximately 0.5 megohm should be provided. In addition it is recommended that a suitable device be used to limit grid 2 voltage to the maximum rated value to prevent tube damage in case of a momentary arc.

6. Line width is defined as the distance between the half-amplitude points of the light-energy distribution of the line and is measured with a peak current of 1 microampere, using the slit-scan technique described in Ⓦ reprint #5510. Line width with other phosphors may vary slightly. Dynamic focus modulation is necessary to maintain optimum resolution over entire face. Close control of supply regulation and ripple is necessary to ensure optimum focus. Typically, a 0.1% change in focus or anode voltage, from best value, will increase spot size approximately 10%.

7. With the tube shielded against external magnetic fields, the undeflected focused spot lies within a circle of 5 mm radius concentric with the faceplate.

Westinghouse

DEVELOPMENTAL DEVICE
Tentative Data

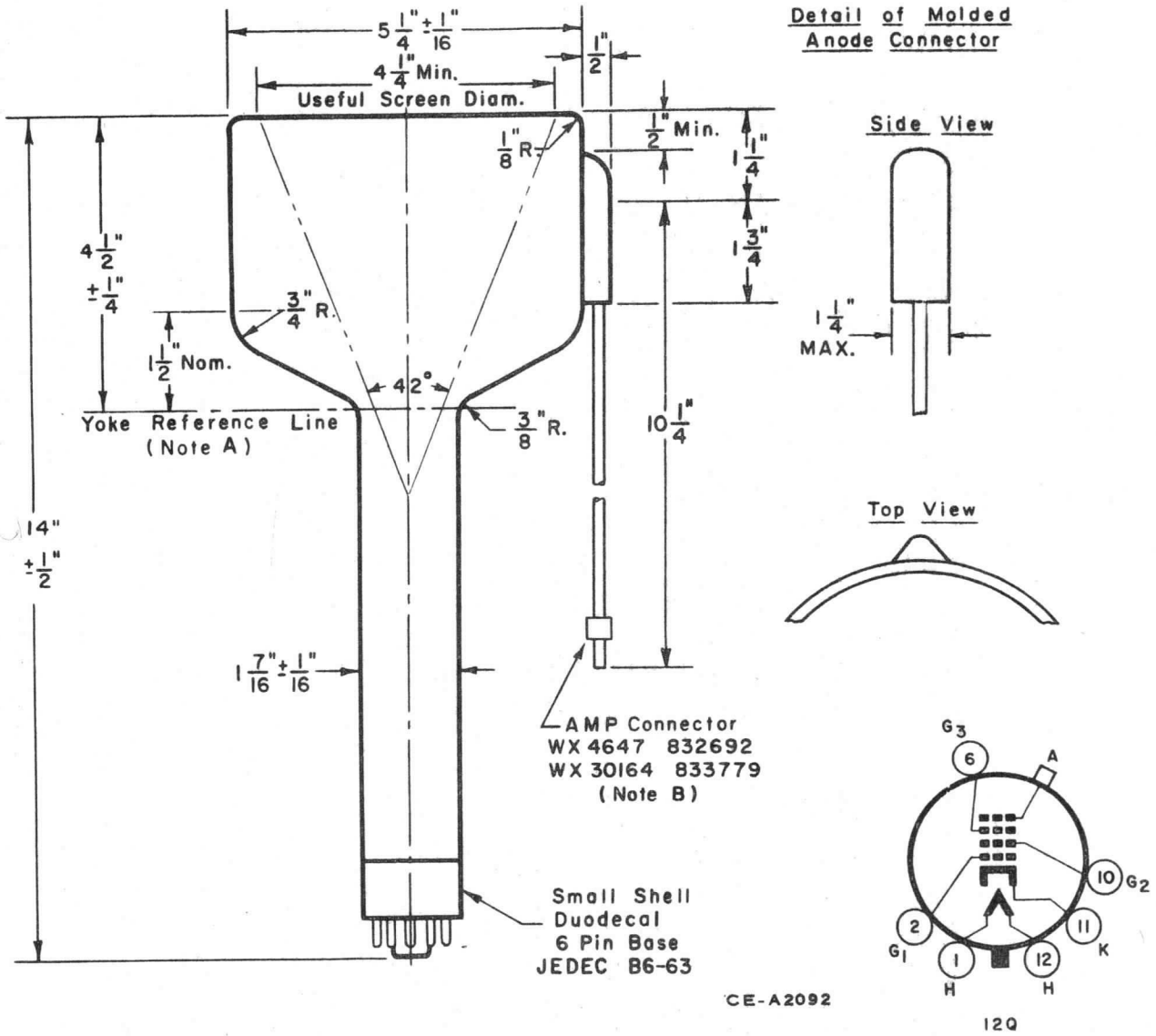

OUTLINE NOTES

A. The Yoke Reference Line is determined by JEDEC Reference Line Gage No. 112.

B. The plane defined by the tube axis and pin position 3 will be within 10° of the plane defined by the tube axis and the anode.

Compact Tube - Yoke - Shield Assembly

Westinghouse

Personal Viewer

Type: WX-4694P-
10 Power Ocular
0.6" Diameter Screen
High Brightness
Long Flexible Leads

Application

The WX-4694, nicknamed the Private Eye, represents the introduction of a new and novel means of visual information presentation. The complete device, as shown below, is comprised of a small high resolution display tube (WX-4527), a magnetic deflection yoke, and a magnifying eyepiece assembled into a structure that can be hand held for viewing. The picture presented to the viewer by the Private Eye is the equivalent of a 6" diameter screen located 10" from the eye having 750-900 bits per diameter of resolvable information. A panel mounted display tube to perform the same function would be approximately 7" in diameter.

In addition to the saving in space accomplished by the Private Eye, the effect of ambient viewing conditions is eliminated. Since the tube face is contained within the package and all the light from the screen is presented to the eye, a crisp bright picture is available even in brightest sunlight.

To enable the device to be mobile, all tube and yoke voltages are brought in by cabling through the base. The power supplies, deflection amplifiers, and signal handling circuits can therefore be located in any convenient spot and their outputs be connected to the Private Eye through the cable.

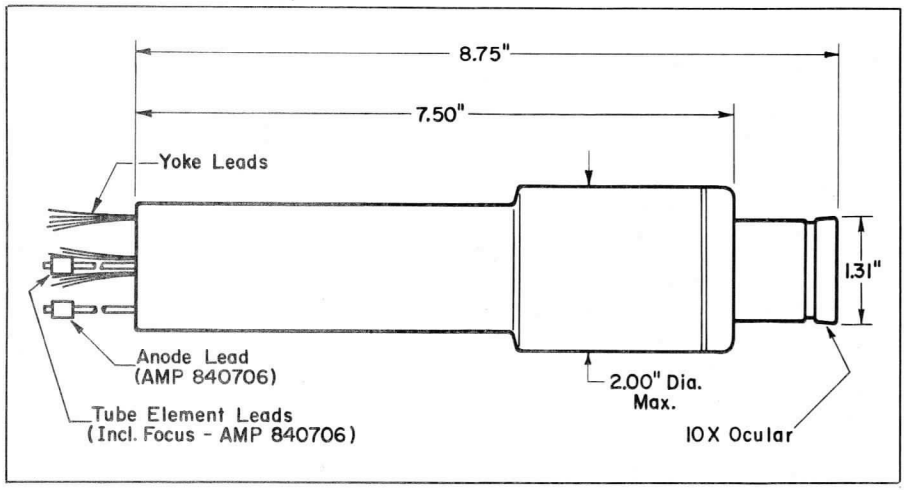

A few of the applications for the Private Eye that have been suggested are as follows:

1. Light plane weather radar.
2. Plug-in portable monitor display.
3. Remote Depth Perception using two cameras and two Private Eye units.
4. Multiple microscope viewing, either binocular or monocular, with camera mounted on the microscope for class room work or remote microscope use in contaminated area.
5. Portable radar receiver for field commanders.

Electrical

Cathode	Coated Unipotential
Heater:	
Voltage	6.3 Volts
Current	0.60 Ampere
Direct Interelectrode Capacitances: (Note 1)	
Grid 1 to All Other Electrodes	9 pF
Grid 2 to All Other Electrodes	7 pF
Cathode to All Other Electrodes	7 pF
Focusing Method	Electrostatic
Deflection	Magnetic
Yoke Characteristics:	
Vertical Inductance	3 mH
Vertical Resistance	19 Ohms
Horizontal Inductance	170 μH
Horizontal Resistance	1 Ohms

Optical

Screen Phosphor	Note 2
Faceplate:	
Configuration	Flat

Mechanical

Mounting Position	Any
Net Weight (Approx.)	20 Ounces

Absolute Maximum Ratings

Anode 2 Voltage	11000 max. Volts
Anode 1 (Focus) Voltage (Note 3)	1500 max. Volts
Grid 2 Voltage	600 max. Volts
Grid 1 Voltage:	
Negative Bias Value	180 max. Volts
Positive Bias Value	0 max. Volts
Positive Peak Value	0 max. Volts
Heater-Cathode Voltage:	
Heater Negative with respect to Cathode:	
During Warm-up Period of 15 sec. max.	410 max. Volts
After Equipment Warm-up Period	180 max. Volts
Heater Positive with respect to Cathode:	
Peak	180 max. Volts
DC	0 max. Volts

Limiting Circuit Values

Grid 1 Circuit Resistance	1.5 max. Megohms
Grid 2 Circuit Resistance	See Note 4
Focus Electrode Circuit Resistance (Minimum)	10000 Ohms

Typical Operating Conditions

Anode 2 Voltage	8000	Volts
Anode 1 (Focus) Voltage (Note 3) (Approx.)	1300	Volts
Grid 2 Voltage	300	Volts
Grid 1 Spot Cut-off Voltage	−40 to −65	Volts
Maximum Line Width "A" with P11 (Note 5)	0.0008	Inch
Deflection Factors:		
Vertical	0.24	Ampere/Radius
Horizontal	1.0	Ampere/Radius

June 1968
Supersedes WX-4694 dated August 6, 1952
S6−2C−11C, S5−10A, WI−1300

Compact Tube - Yoke - Shield Assembly

Personal Viewer

Type: WX-4694P-
10 Power Ocular
0.6" Diameter Screen
High Brightness
Long Flexible Leads

Notes

1. Tube unit only - does not include wiring and stray capacitance.
2. Westinghouse Military & Industrial Cathode Ray Tubes can be supplied with most of the standard JEDEC phosphors.
3. The focus electrode may draw a peak current of 2 milliamperes with a representative value of 300 microamperes under normal operation.
4. A grid 2 circuit resistance of approximately 0.5 megohm should be provided. In addition it is recommended that a suitable device be used to limit grid 2 voltage to the maximum rated value to prevent damage in case of a momentary arc.
5. Line width is defined as the distance between the half-amplitude points of the light-energy distribution of the line and is measured with a peak current of 1 microampere, using the slit-scan technique described in Westinghouse reprint #5510. Line width with other phosphors may vary slightly. Dynamic focus modulation is necessary to maintain optimum resolution over entire face. Close control of supply regulation and ripple is necessary to ensure optimum focus. Typically, a 0.1% change in focus or anode voltage, from best value, will increase spot size approximately 10%.
6. With the tube shielded against external magnetic fields, the undeflected focused spot lies within a circle of 2 mm radius concentric with the faceplate.

Index to Leads

Tube Unit

Heaters	White with Brown Tracer
Cathode	Shielded Cable Belden 8411-250
Grid 1	Shielded Cable Belden 8411-250
Grid 2	White with Blue Tracer
Grid 3 (Focus)	AMP 840706-Yellow
Anode	AMP 840706-White
Ground (See Note)	Black

Deflection Yoke

Vertical:	
Centertap	White
Down	Blue (–) Brown (+)
Horizontal:	
Centertap	Orange
Right	Green (–) Yellow (+)

Ground Note

This lead is internally connected to ocular eyepiece and must be adequately grounded for operator safety.

Westinghouse Electric Corporation
Electronic Tube Division, Elmira, N. Y. 14902
Printed in U.S.A.

RADAR DISPLAY TUBE TYPE WX-4741P-

The WX-4741P- is identical to the WX4541P- with the following exceptions.

1. The electron gun is designed for operation with an anode voltage of 15 KV with all other voltages unchanged.

2. The anode terminal is corona protected with an attached lead.

3. Stem leads are potted and, excepting the Grid 1 lead, are cabled and terminated with a Winchester Electronic Type M7P plug.

4. A permanently attached metal mounting ring provides an easy, secure and precise means of mounting the tube and attaching other components.

Δ The WX- number identifies a specific laboratory design; the design and, consequently, the data and type number are subject to change. No obligations are assumed to manufacture this particular device in the future unless otherwise arranged. These drawings and specifications are the property of Westinghouse Electric Corporation, Electronic Tube Division, and shall not be reproduced or copied or used as the basis for the manufacture or sale of apparatus and/or devices without permission.

WESTINGHOUSE ELECTRIC CORPORATION, ELECTRONIC TUBE DIVISION, ELMIRA, NEW YORK

Los Angeles 17, California
600 St. Paul Avenue
Phone HUntley 2-9660

San Lorenzo, California
2222 Grant Avenue
Phone EXbrook 2-5353

Elmira, New York
Box 284
Phone REgent 9-3611

Washington 6, D.C.
1625 K Street N.W.
Phone NAtional 8-8843

Chicago 9, Illinois
2211 W. Pershing Road
Phone WHitehall 4-3860

Boston, Massachusetts
10 High Street
Phone LIberty 2-0600

Detroit 32, Michigan
Box 502, 5757 Trumbull Ave.
Phone TRinity 2-7010

Bloomfield, New Jersey
MacArthur Avenue
Phone HUmbolt 4-3000

Westinghouse

DEVELOPMENTAL DEVICE
Tentative Data

Military & Industrial CRT

Westinghouse

Type: WX-4793P-★

Low Voltage Focus, Magnetic Deflection
Line Width = 0.008″
5″ Round Flat Faceplate

Basic Characteristics
5″ Round
40° Magnetic Deflection
Low Voltage Focus
Aluminized

Typical Applications
Monitor
Photographic

Special Features
Flat Faceplate
Line Width = 0.008″

Electrical

Cathode	Coated Unipotential
Heater:	
Voltage	6.3 Volts
Current	0.6 Ampere
Direct Interelectrode Capacitances:	
Grid 1 to All Other Electrodes	9.0 pF
Grid 2 to All Other Electrodes	7.0 pF
Cathode to All Other Electrodes	7.0 pF
Focusing Method	Electrostatic
Deflection	40° Magnetic

Optical

Screen Phosphor	Note 1
Faceplate:	
Configuration (Note 2)	Flat
Glass	Gray
Transmission	75%
Index of Refraction	1.52

Mechanical

Mounting Position	Any
Net Weight	1.5 Pounds

Absolute Maximum Ratings

Anode Voltage (Note 3)	17000 max.	Volts
Grid 4 (Focus) Voltage	−500 +1000 max.	Volts
Grid 2 Voltage	450 max.	Volts
Grid 1 Voltage:		
Negative Bias Value	180 max.	Volts
Positive Bias Value	0 max.	Volts
Positive Peak Value	0 max.	Volts
Heater-Cathode Voltage:		
Heater Negative with respect to Cathode:		
During Warm-up Period of 15 sec. max.	410 max.	Volts
After Equipment Warm-up Period	180 max.	Volts
Heater Positive with respect to Cathode:		
Peak	180 max.	Volts
DC	0 max.	Volts

Limiting Circuit Values

Grid 1 Circuit Resistance	1.5 max.	Megohms
Focus Electrode Circuit Resistance	10000 min.	Ohms

Typical Operating Conditions & Performance

Anode Voltage (Note 3)	12000	Volts
Grid 4 (Focus) Voltage	0 to 400	Volts
Grid 2 Voltage	300	Volts
Grid 1 Spot Cut off Voltage	−35 to −75	Volts
Line Width (Note 4)	0.008	Inch
Spot Position (Note 5)	8	mm

Notes

1. Westinghouse Military & Industrial Cathode Ray Tubes can be supplied with most of the standard JEDEC phosphors.
2. The faceplate is a ground and polished flat plate 0.250″ ± 0.020″ thick with a maximum deviation from mean thickness for individual plates of 0.010″. Maximum deviation from flatness is 0.010″ within a circle of 4.25″ diameter centered on the tube axis.
3. Operation with voltage in excess of 16KV may require shielding to limit radiation of very soft X-rays.
4. Line width is measured by the shrinking raster method with a beam current of 50 microamperes.
5. With the tube shielded against external magnetic fields, the undeflected focused spot lies within a circle of 8 mm radius concentric with the faceplate.

★ The WX-number identifies a specific laboratory design; the design and, consequently, the data and type number are subject to change. No obligations are assumed to manufacture this particular device in the future unless otherwise arranged. These drawings and specifications are the property of Westinghouse Electric Corporation, Electronic Tube Division, and shall not be reproduced or copied or used as the basis for the manufacture or sale of apparatus and/or devices without permission.

December 1968
Supersedes WX-4793P- dated May 3, 1963
S6−2C−11C, S5−10A, WI−1300

Military & Industrial CRT

Type: WX-4793P-★

Low Voltage Focus, Magnetic Deflection
Line Width = 0.008″
5″ Round Flat Faceplate

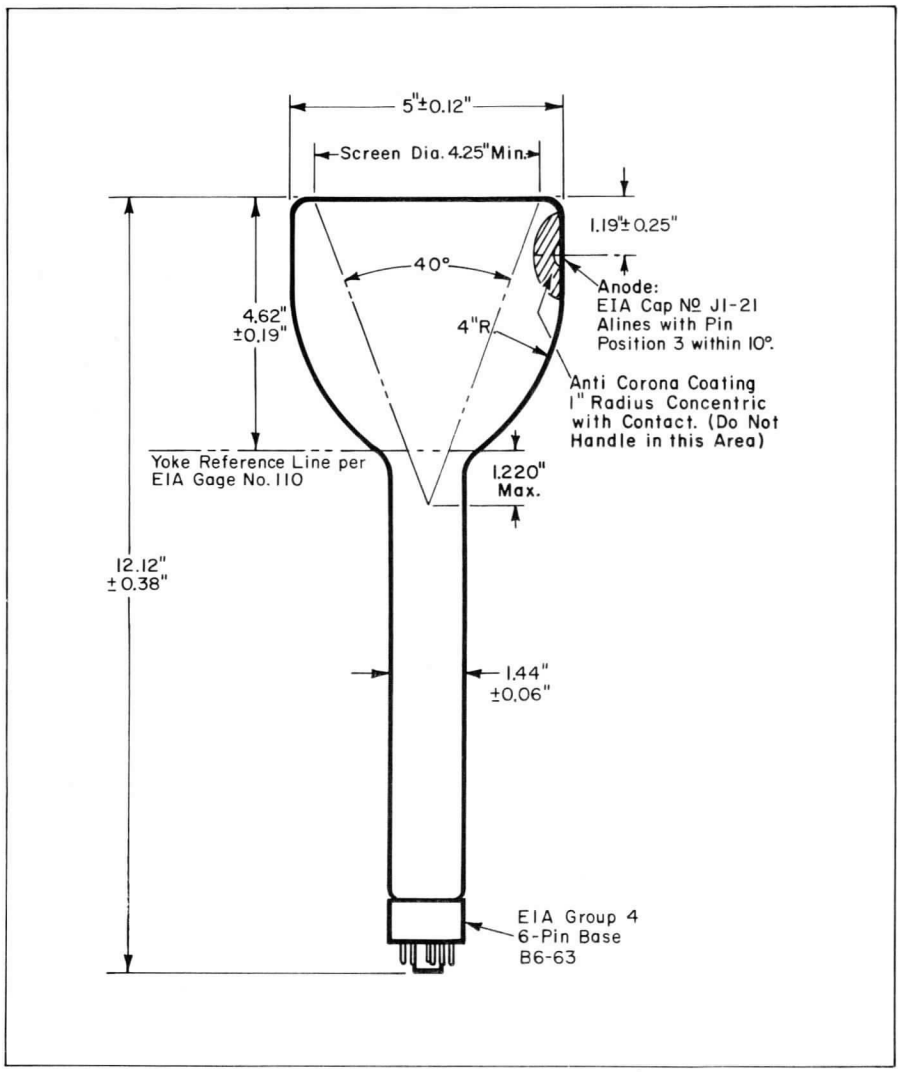

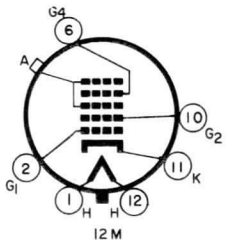

Westinghouse Electric Corporation
Electronic Tube Division, Elmira, N. Y. 14902
Printed in U.S.A.

5" MILITARY & INDUSTRIAL CATHODE RAY TUBE TYPE WX-4796P-

Basic Characteristics	Typical Applications	Special Features
5" Round Spherical Faceplate 70° Magnetic Deflection Aluminized	Radar Display Monitor	Compact Light Weight Low Deflection Power Ruggedized (Note 1)

ELECTRICAL

Cathode	Coated Unipotential
Heater:	
Voltage	6.3 Volts
Current	0.3 Ampere
Direct Interelectrode Capacitances:	
Grid 1 to all other Electrodes	9 pf
Grid 2 to all other Electrodes	7 pf
Cathode to all other Electrodes	7 pf
Focusing Method	Electrostatic
Deflection	70° Magnetic

OPTICAL

Screen Phosphor	Note 2
Faceplate:	
Configuration	Spherical
Glass	Clear
Transmission	90%
Index of Refraction	1.56

MECHANICAL

Mounting Position	Any
Net Weight	1 Pound

Δ The WX- number identifies a specific laboratory design; the design and, consequently, the data and type number are subject to change. No obligations are assumed to manufacture this particular device in the future unless otherwise arranged. These drawings and specifications are the property of Westinghouse Electric Corporation, Electronic Tube Division, and shall not be reproduced or copied or used as the basis for the manufacture or sale of apparatus and/or devices without permission.

Westinghouse

DEVELOPMENTAL DEVICE
Tentative Data

ABSOLUTE MAXIMUM RATINGS

Anode Voltage	15000 max. Volts
Grid 4 (Focus) Voltage	600 max. Volts
Grid 2 Voltage	600 max. Volts
Grid 1 Voltage:	
Negative Bias Value	180 max. Volts
Positive Bias Value	0 max. Volts
Positive Peak Value	0 max. Volts
Peak Heater-Cathode Voltage:	
Heater Negative with respect to Cathode:	
During warm-up period of 15 sec. max.	410 max. Volts
After Equipment warm-up period	180 max. Volts
Heater Positive with respect to Cathode	180 max. Volts

LIMITING CIRCUIT VALUES

Grid 1 Circuit Resistance	1.5 max. Megohms
Grid 2 Circuit Resistance	See Note 3
Focus Electrode Circuit Resistance	10000 min. Ohms

TYPICAL OPERATING CONDITIONS

Anode Voltage	8000 Volts
Grid 4 (Focus) Voltage	0 to 300 Volts
Grid 2 Voltage	300 Volts
Grid 1 Spot Cutoff Voltage	-25 to -60 Volts
Line Width for P4 (Note 4)	0.012 Inch
Spot Position (Note 5)	5mm

NOTES

1. The electron gun has been designed to withstand without damage, vibration at 0.120" D.A. from 5 to 55 CPS and at 20g from 55 to 500 CPS.

2. Westinghouse Military & Industrial Cathode Ray Tubes can be supplied with most of the standard JEDEC phosphors.

3. A grid 2 circuit resistance of approximately 0.5 megohm should be provided.

4. Line width is measured at an anode current of 50 microamperes by visual observation of a test pattern.

5. With the tube shielded against external magnetic fields, the undeflected focused spot lies within a circle of 5mm radius concentric with the faceplate.

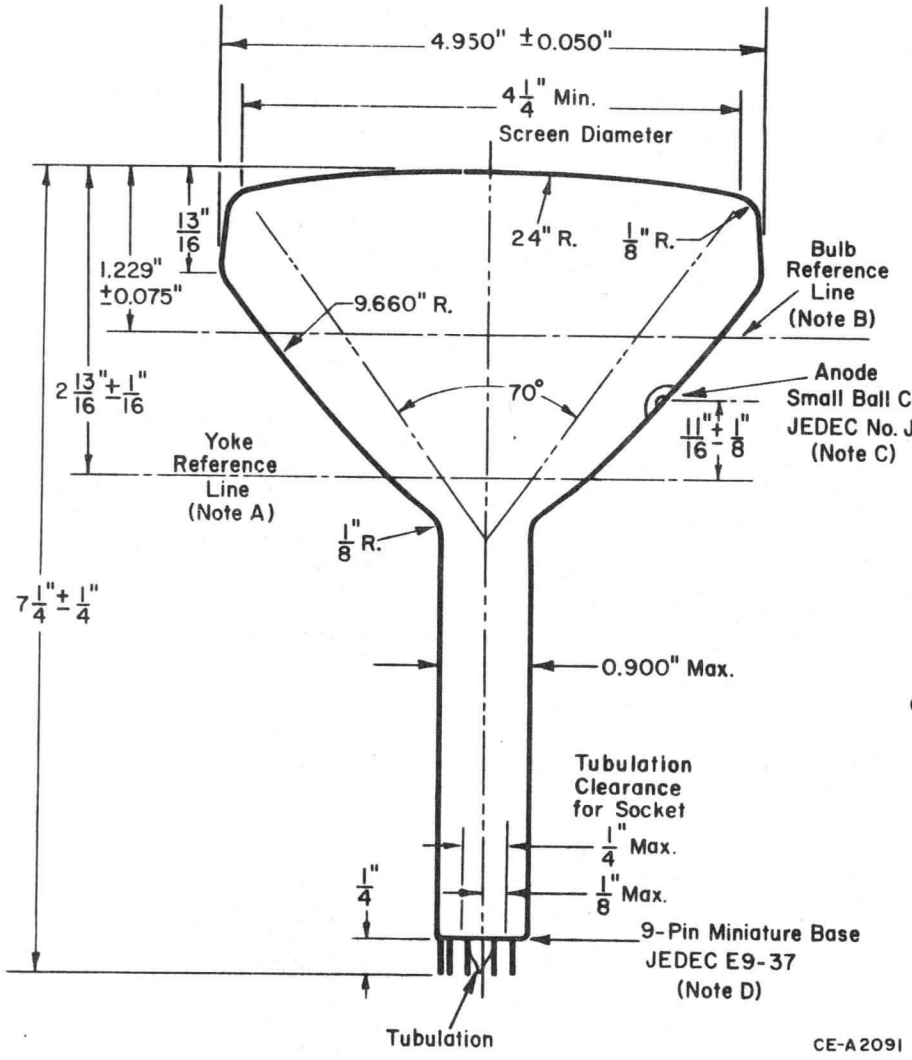

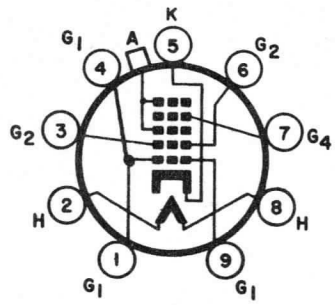

OUTLINE NOTES

A. The Yoke Reference Line is determined by JEDEC Reference Line Gage No. 123.

B. Bulb Reference Line is determined by the leading edge of a 4.625" ± 0.002" I.D. ring gage.

C. The plane defined by the tube axis and the anode will lie between pins 1 & 9.

D. A socket with a center opening to clear the tubulation must be used. Care should be exercised to avoid damage to the tubulation.

5" TUBE TYPE WX-4877P1
HIGH RESOLUTION DISPLAY TUBE

Basic Characteristics	Typical Applications	Special Features
Molded Anode Connector	High Resolution	0.0025" Spot Size
Aluminized Screen	Photographic Recording	Reduced Linearity Error
5" Flat Face	and	(Approx. 2.5% Compared to
Round Glass Bulb	Flying Spot Scanning	6.5% for 40° tubes)
ES Focus		Edge-to-Center Spot-Size
25° Magnetic Deflection		Ratio of 1.1

ELECTRICAL

Cathode	Coated Unipotential
Heater:	
Voltage (ac or dc)	6.3 Volts
Current	0.6 ± 10% Ampere
Direct Interelectrode Capacitances:	
Grid 1 to All Other Electrodes	9 pf
Grid 2 to All Other Electrodes	7 pf
Cathode to All Other Electrodes	7 pf
Focusing Method	Electrostatic
Deflection:	
Method	Magnetic
Angle (Approx.)	25°

MECHANICAL

Mounting Position	Any
Screen Dimensions: (Note 1)	
Diameter	$4\frac{1}{4}$" Min.
Faceplate:	
Configuration (Note 2)	Flat
Glass	Neutral Gray
Transmission (Approx.)	75%
Index of Refraction	1.52 ± 0.01
Bulb Dimensions:	
Diameter	5 1/4" ± 1/16"

Δ The WX- number identifies a specific laboratory design; the design and, consequently, the data and type number are subject to change. No obligations are assumed to manufacture this particular device in the future unless otherwise arranged. These drawings and specifications are the property of Westinghouse Electric Corporation, Electronic Tube Division, and shall not be reproduced or copied or used as the basis for the manufacture or sale of apparatus and/or devices without permission.

Overall Length	22 1/2" Max.
Anode Terminal	AMP #833807
Base	Small Shell Duodecal 6-Pin (JEDEC B6-63)
Net Weight (Approx.)	3 1/4 Pounds

MAXIMUM RATINGS

Absolute Maximum Values

Anode Voltage (Note 3)	25000 max. Volts
Grid 3 (Focus) Voltage	9000 max. Volts
Grid 2 Volts	600 max. Volts
Grid 1 Volts:	
Negative Bias Value	180 max. Volts
Positive Bias Value	0 max. Volts
Positive Peak Value	0 max. Volts
Peak Heater-Cathode Voltage:	
Heater Negative with respect to Cathode:	
During warm-up period of 15 sec. max.	410 max. Volts
After Equipment warm-up period	180 max. Volts
Heater Positive with respect to Cathode	180 max. Volts

LIMITING CIRCUIT VALUE

Grid 1 Circuit Resistance	1.5 max. Megohms

TYPICAL OPERATING CONDITIONS

Anode Voltage (Note 3)	10000	20000 Volts
Grid 3 (Focus) Voltage	3100 to 3500	6400 to 6800 Volts
Grid 2 Voltage	300	300 Volts
Grid 1 Spot Cutoff Voltage	-40 to -65	-40 to -65 Volts
Line Width (for P11) (Note 4)		0.0025 Inch
Spot Position (Note 5)		7.5 mm.

NOTES

1. Westinghouse Military and Industrial Cathode Ray Tubes can be supplied with most of the standard JEDEC phosphors.
2. Faceplate - Ground and polished flat plate; Thickness: 0.245" ± 0.005"; Max. deviation from mean thickness for individual plates: 0.001"; Deviation from flatness for a 4 1/4" length centered on tube face: 0.005".
3. Operation with voltages in excess of 16 KV may require shielding to limit radiation of very soft X-rays.
4. Line width is defined as the distance between the half-amplitude points of the light-energy distribution of the line and is measured with a peak current of 10 microamperes using the slit-scan technique described in Westinghouse Reprint No. 5510. Line width with other phospors may vary slightly.
5. The undeflected focused spot lies within a circle of 7.5 millimeters radius concentric with the faceplate.

OUTLINE DRAWING

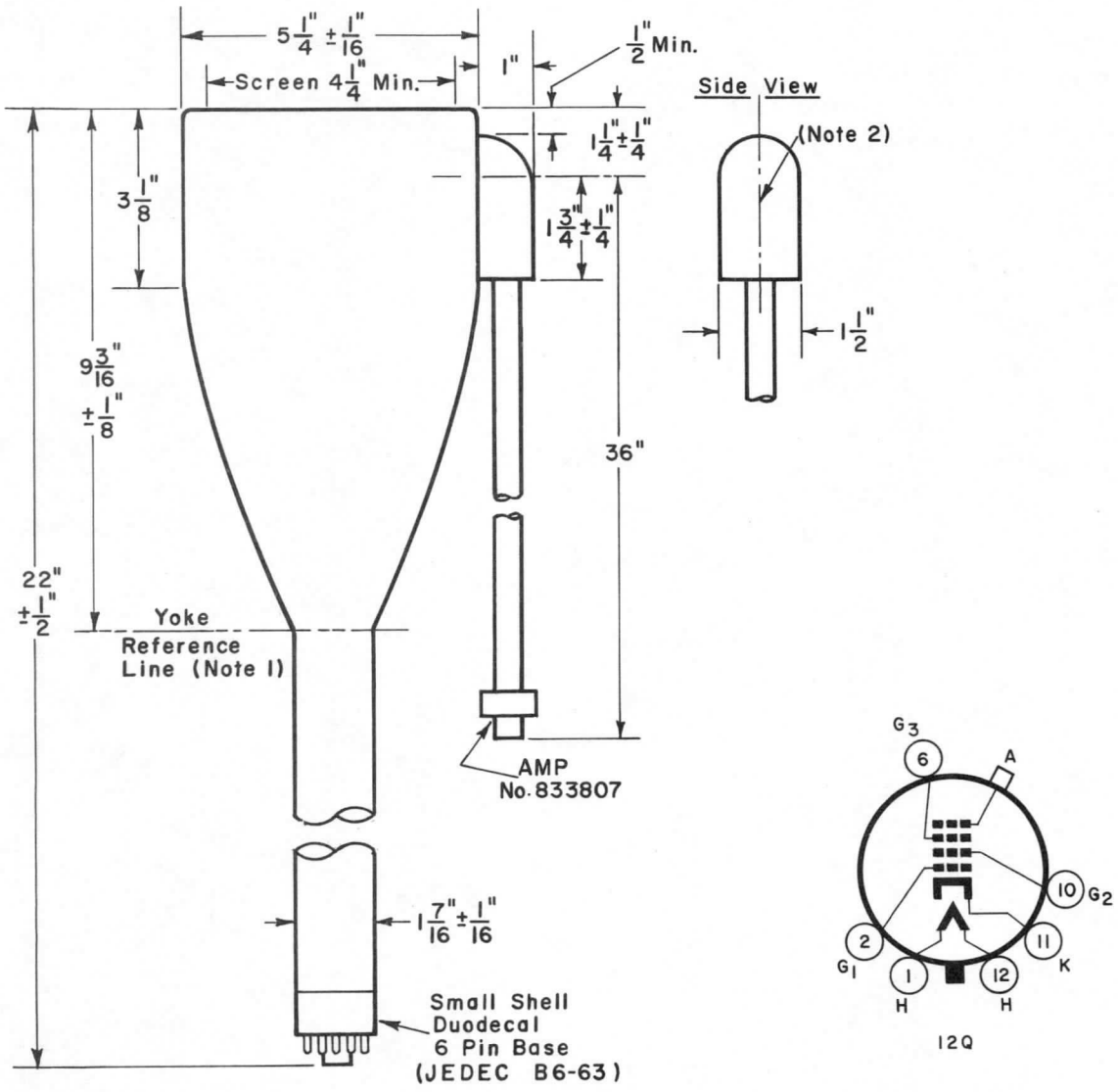

1. Yoke Refernce Line is determined by the JEDEC Reference Line Gage No. 112.

2. Anode molded terminal alines with base pin position 3 and tube axis within 10°.

5" MILITARY & INDUSTRIAL CATHODE RAY TUBE TYPE WX-4903P-

Basic Characteristics	Typical Applications	Special Features
5 1/4" Round Flat Face	Photographic Recording	0.00065" Line Width
40° Magnetic Deflection	Line Scan Applications	Molded Anode Connector
Electrostatic Focus	Flying Spot Scanning	Potted Leads

ELECTRICAL

Cathode	Coated Unipotential
Heater:	
Voltage	6.3 Volts
Current	0.450 Ampere
Direct Interelectrode Capacitances:	
Grid 1 to all other Electrodes	9 pf
Grid 2 to all other Electrodes	7 pf
Cathode to all other Electrodes	7 pf
Focusing Method	Electrostatic
Deflection	40° Magnetic

OPTICAL

Screen Phosphor	Note 1
Faceplate:	
Configuration (Note 2)	Flat
Glass	Clear
Transmission	82%
Index of Refraction	1.52

MECHANICAL

Mounting Position	Any
Net Weight (Approx.)	3 Pounds

Δ The WX- number identifies a specific laboratory design; the design and, consequently, the data and type number are subject to change. No obligations are assumed to manufacture this particular device in the future unless otherwise arranged. These drawings and specifications are the property of Westinghouse Electric Corporation, Electronic Tube Division, and shall not be reproduced or copied or used as the basis for the manufacture or sale of apparatus and/or devices without permission.

Westinghouse

DEVELOPMENTAL DEVICE
Tentative Data

ABSOLUTE MAXIMUM RATINGS

Anode Voltage (Note 3)	22000 max. Volts
Grid 3 (Focus) Voltage (Note 4)	6000 max. Volts
Grid 2 Voltage	600 max. Volts
Grid 1 Voltage	
Negative Bias Value	180 max. Volts
Positive Bias Value	0 max. Volts
Positive Peak Value	0 max. Volts
Peak Heater-Cathode Voltage:	
Heater Negative with respect to Cathode:	
During warm-up period of 15 sec. max.	410 max. Volts
After Equipment warm-up period	180 max. Volts
Heater Positive with respect to Cathode	180 max. Volts

LIMITING CIRCUIT VALUES

Grid 1 Circuit Resistance	1.5 max. Megohms
Grid 2 Circuit Resistance	See Note 5

TYPICAL OPERATING CONDITIONS

Anode Voltage (Note 3)	15000 Volts
Grid 3 (Focus) Voltage (Note 4)	4000 to 4400 Volts
Grid 2 Voltage	500 Volts
Grid 1 Spot Cutoff Voltage	-35 to -80 Volts
Line Width for P11 (Note 6)	0.00065 Inch
Spot Position (Note 7)	5 mm

NOTES

1. Westinghouse Military & Industrial Cathode Ray Tubes can be supplied with most of the standard JEDEC phosphors.

2. The faceplate is a ground and polished flat plate 0.495" ± 0.005" thick with a max. deviation from mean thickness for individual plates of 0.001". Maximum deviation from flatness is 0.001" within a circle of 4" diameter centered on the tube axis.

3. Operation with voltage in excess of 16KV may require shielding to limit radiation of very soft x-rays.

4. The grid 3 electrode may draw a peak current of 2 milliamperes with a representative value of 300 microamperes under normal operation.

5. A grid 2 circuit resistance of approximately 0.5 megohm should be provided. In addition it is recommended that a suitable device be used to limit grid 2 voltage to the maximum rated value to prevent tube damage in case of a momentary arc.

6. Line width is defined as the distance between the half-amplitude points of the light-energy distribution of the line and is measured with a peak current of 1 microampere, using the slit-scan technique described in Ⓦ reprint #5510. Line width with other phosphors may vary slightly. Dynamic focus modulation is necessary to maintain optimum resolution over entire face. Close control of supply regulation and ripple is necessary to ensure optimum focus. Typically, a 0.1% change in focus or anode voltage, from best value, will increase spot size approximately 10%.

7. With the tube shielded against external magnetic fields, the undeflected focused spot lies within a circle of 5 mm radius concentric with the faceplate.

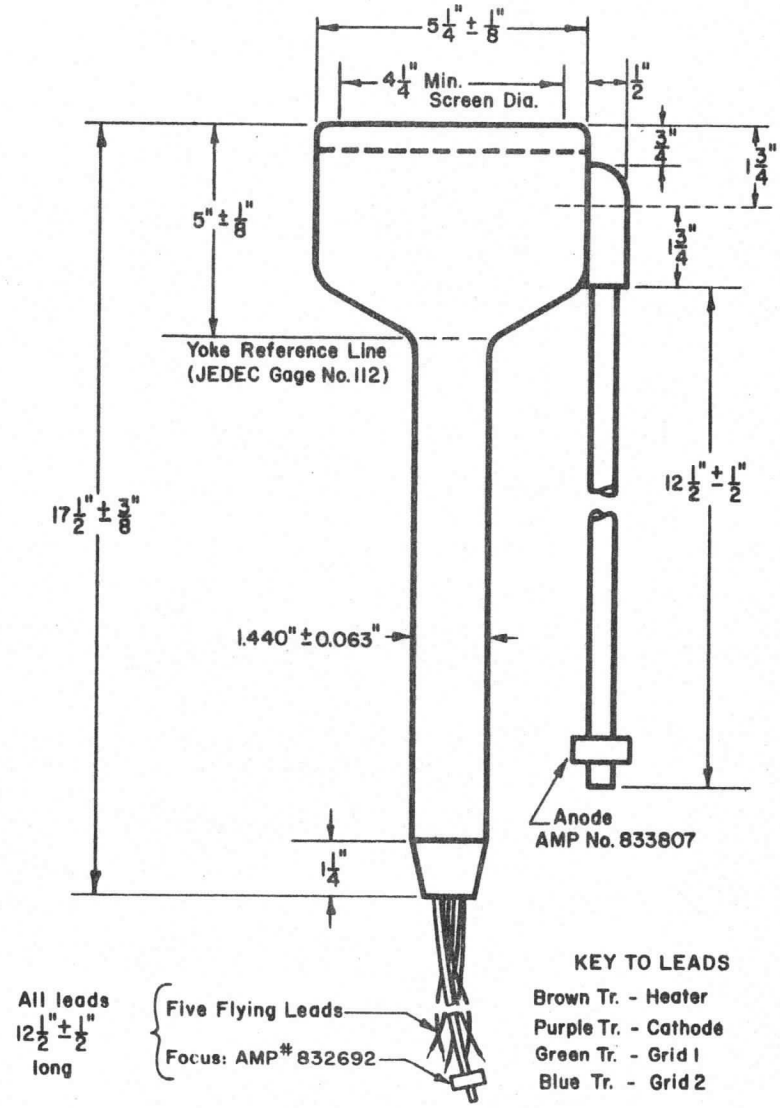

Westinghouse

Industrial & Military CRT

Type: WX-4912P- ★

4″ (101.6mm) Round Flat Faceplate
Line Width = 0.0015″ (0.04mm)
42° Magnetic Deflection, ES Focus

Basic Characteristics
4″ (101.6mm) Round Flat Faceplate
Electrostatic Focus
42° Magnetic Deflection
Aluminized Screen

Typical Applications
Photographic Recording
Flying Spot Scanning

Special Features
Line Width = 0.0015″ (0.04mm)

Electrical

Cathode	Coated Unipotential
Heater:	
Voltage	6.3 Volts
Current	0.6 Ampere
Direct Interelectrode Capacitance:	
Grid 1 to All Other Electrodes	9 pF
Grid 2 to All Other Electrodes	7 pF
Cathode to All Other Electrodes	7 pF
Focusing Method	Electrostatic
Deflection	42° Magnetic

Optical

Screen Phosphor	Note 1
Faceplate:	
Configuration (Note 2)	Flat
Glass	Clear
Transmission	91%
Index of Refraction	1.506

Mechanical

Mounting Position	Any
Net Weight	1.5 Pounds 0.66 Kilogram

Maximum Ratings

Absolute Maximum Values

Anode Voltage (Note 3)	22000 max. Volts
Grid 3 (Focus) Voltage (Note 4)	5500 max. Volts
Grid 2 Volts	600 max. Volts
Grid 1 Volts:	
Negative Bias Value	180 max. Volts
Positive Bias Value	0 max. Volts
Positive Peak Value	0 max. Volts
Peak Heater-Cathode Voltage:	
Heater Negative with respect to Cathode:	
During Warm-up Period of 15 sec. max.	410 max. Volts
After Equipment Warm-up Period	180 max. Volts
Heater Positive with respect to Cathode:	
Peak	180 max. Volts
DC	0 max. Volts

Limiting Circuit Values

Grid 1 Circuit Resistance	1.5 max. Megohms
Grid 2 Circuit Resistance	See Note 5

Typical Operation & Performance

Anode Voltage	10000	20000 Volts
Grid 3 (Focus) Voltage (Note 4)	2400 to 2700	4800 to 5400 Volts
Grid 2 Voltage	300	300 Volts
Grid 1 Spot Cutoff Voltage		−40 to −65 Volts
Line Width (Note 6) with P-11		0.0015 Inch
		0.04 mm
Spot Position (Note 7)		4 mm

Notes

1. Westinghouse Military & Industrial Cathode Ray Tubes can be supplied with most of the standard JEDEC phosphors.
2. The faceplate is a ground and polished flat plate 0.240″ (6.10mm) ±0.020″ (0.51mm) thick with a maximum deviation from mean thickness for individual plates of 0.001″ (0.03mm). Maximum deviation from flatness is 0.003″ (0.08mm) within a circle of 3.25″ (82.6mm) diameter centered on the tube axis.
3. Operation with voltage in excess of 16 kilovolts may require shielding to limit radiation of very soft X-rays.
4. The grid 3 electrode may draw a peak current of 1.5 milliamperes with a representative value of 300 microamperes under normal operation.
5. A grid 2 circuit resistance of approximately 0.5 megohm should be provided. In addition it is recommended that a suitable device be used to limit grid 2 voltage to the maximum rated value to prevent tube damage in case of momentary arc.
6. Line width is defined as the distance between the half-amplitude points of the light-energy distribution of the line and is measured with a peak current of 4 microamperes, using the slit-scan technique described in publication 86-704 (Westinghouse reprint #5510). Line width with other phosphors may vary slightly. Dynamic focus modulation is necessary to maintain optimum resolution over entire face. Close control of supply regulation and ripple is necessary to ensure optimum focus. Typically, 1 0.1% change in focus or anode voltage, from best value, will increase spot size approximately 10%.
7. With the tube shielded against external magnetic fields, the undeflected focused spot lies within a circle of 4mm radius concentric with the faceplate.

★ The WX-number identifies a specific laboratory design; the design and, consequently, the data and type number are subject to change. No obligations are assumed to manufacture this particular device in the future unless otherwise arranged. These drawings and specifications are the property of Westinghouse Electric Corporation, Electronic Tube Division, and shall not be reproduced or copied or used as the basis for the manufacture or sale of apparatus and/or devices without permission.

February 1971
New Information
TC−2236-2

Industrial & Military CRT

Type: WX-4912P-

4" (101.6mm) Round Flat Faceplate
Line Width = 0.0015" (0.04mm)
42° Magnetic Deflection, ES Focus

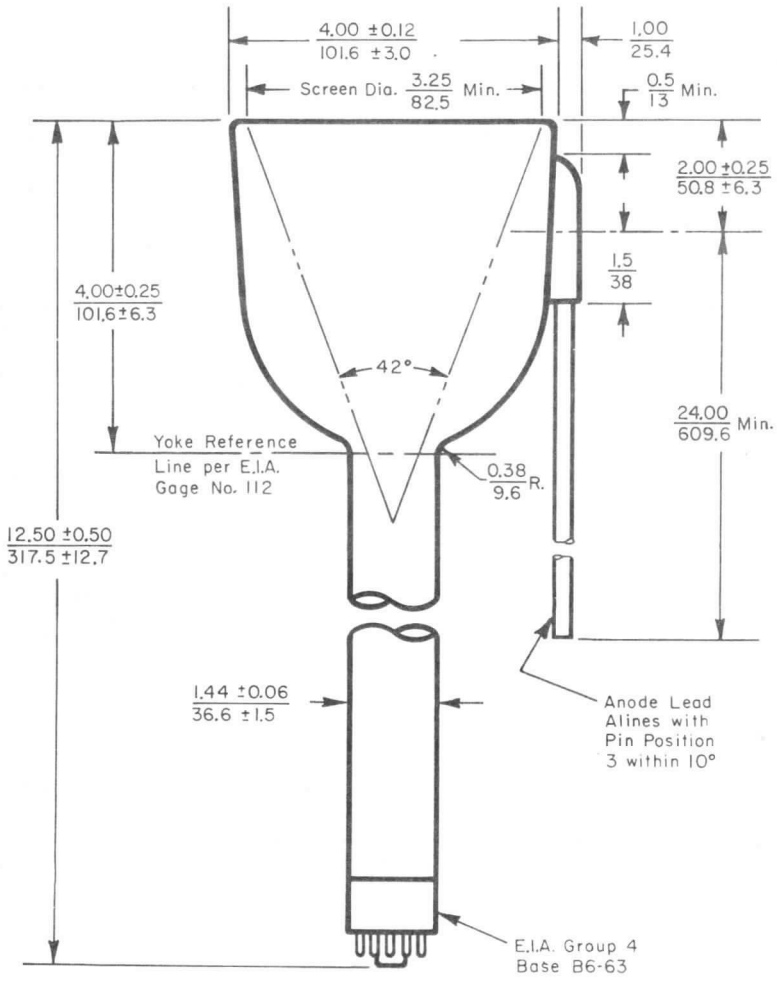

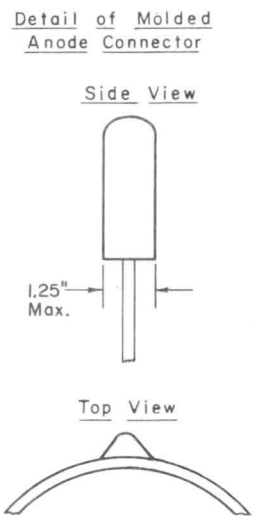

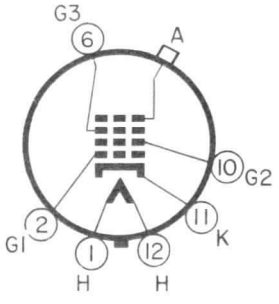

12 Q

(Dimensions in inches / mm unless otherwise shown) The millimeter dimensions are derived from the original inch dimensions, 1" = 25.4 mm exactly.

Westinghouse Electric Corporation
Electronic Tube Division, Elmira, N.Y. 14902
Printed in U.S.A.

10" MILITARY & INDUSTRIAL CATHODE RAY TUBE TYPE WX-4924P-

Basic Characteristics	Typical Applications	Special Features
10" Round Spherical Faceplate Electrostatic Focus 50° Magnetic Deflection Aluminized	Radar Display	Single-Axis, Auxiliary Electrostatic Deflection

ELECTRICAL

Cathode	Coated Unipotential
Heater:	
Voltage	6.3 Volts
Current	0.6 Ampere
Direct Interelectrode Capacitances:	
Grid 1 to All Other Electrodes	9 pf
Grid 2 to All Other Electrodes	7 pf
Cathode to All Other Electrodes	7 pf
D1 to D2	5 pf
D1 to All Other Electrodes except D2	10 pf
D2 to All Other Electrodes except D1	10 pf
Focusing Method	Electrostatic
Deflection	50° Magnetic

OPTICAL

Screen Phosphor	Note 1
Faceplate:	
Configuration	Spherical
Glass	Gray
Transmission	75%

MECHANICAL

Mounting Position	Any
Screen Diameter	9" Min.
Bulb Diameter	10 1/2" ± 3/32"
Overall Length	17 1/8" ± 3/8"
Anode Terminal	JEDEC J1-21
Base	Small Shell Duodecal 8-Pin Base
Net Weight	10 1/2 Pounds

Δ The WX- number identifies a specific laboratory design; the design and, consequently, the data and type number are subject to change. No obligations are assumed to manufacture this particular device in the future unless otherwise arranged. These drawings and specifications are the property of Westinghouse Electric Corporation, Electronic Tube Division, and shall not be reproduced or copied or used as the basis for the manufacture or sale of apparatus and/or devices without permission.

MAXIMUM RATINGS

Absolute Maximum Values

Anode Voltage (Note 2)	22000 max. Volts
Grid 3 (Focus) Voltage	5000 max. Volts
Grid 2 Voltage	600 max. Volts
Grid 1 Voltage:	
Negative Bias Value	180 max. Volts
Positive Bias Value	0 max. Volts
Positive Peak Value	0 max. Volts
Peak Heater-Cathode Voltage:	
Heater Negative with respect to Cathode:	
During warm-up period of 15 sec. max.	410 max. Volts
After Equipment warm-up period	180 max. Volts
Heater Positive with respect to Cathode	180 max. Volts

LIMITING CIRCUIT VALUE

Grid 1 Circuit Resistance	1.5 max. Megohms

TYPICAL OPERATING CONDITIONS

Anode Voltage (Note 2)	10000 Volts
Grid 3 (Focus) Voltage	2050 to 2350 Volts
Grid 2 Voltage	300 Volts
Grid 1 Spot Cutoff Voltage	-25 to -45 Volts
Line Width (Note 3)	0.015 Inch
Spot Position (Note 4)	18 mm.
Auxiliary Deflection Plate	
Sensitivity (Note 5)	50 Volts per 1/2"

NOTES

1. Westinghouse Military & Industrial Cathode Ray Tubes can be supplied with most of the standard JEDEC phosphors.

2. Operation with voltage in excess of 16KV may require shielding to limit radiation of very soft X-rays.

3. Line width is measured by the shrinking raster method at 40 FL brightness with 6" x 8" T.V. raster.

4. With the tube shielded against external magnetic fields, the undeflected focused spot lies within a circle of 18 mm radius concentric with the faceplate.

5. Deflection voltages must be balanced around the center focus voltage with the center value of deflection well clamped to the focus voltage. The trace produced by D1 & D2 is approximately in line with the plane through base pin 6 and tube axis. Deflection in excess of 1/2" may result in excessive spot distortion.

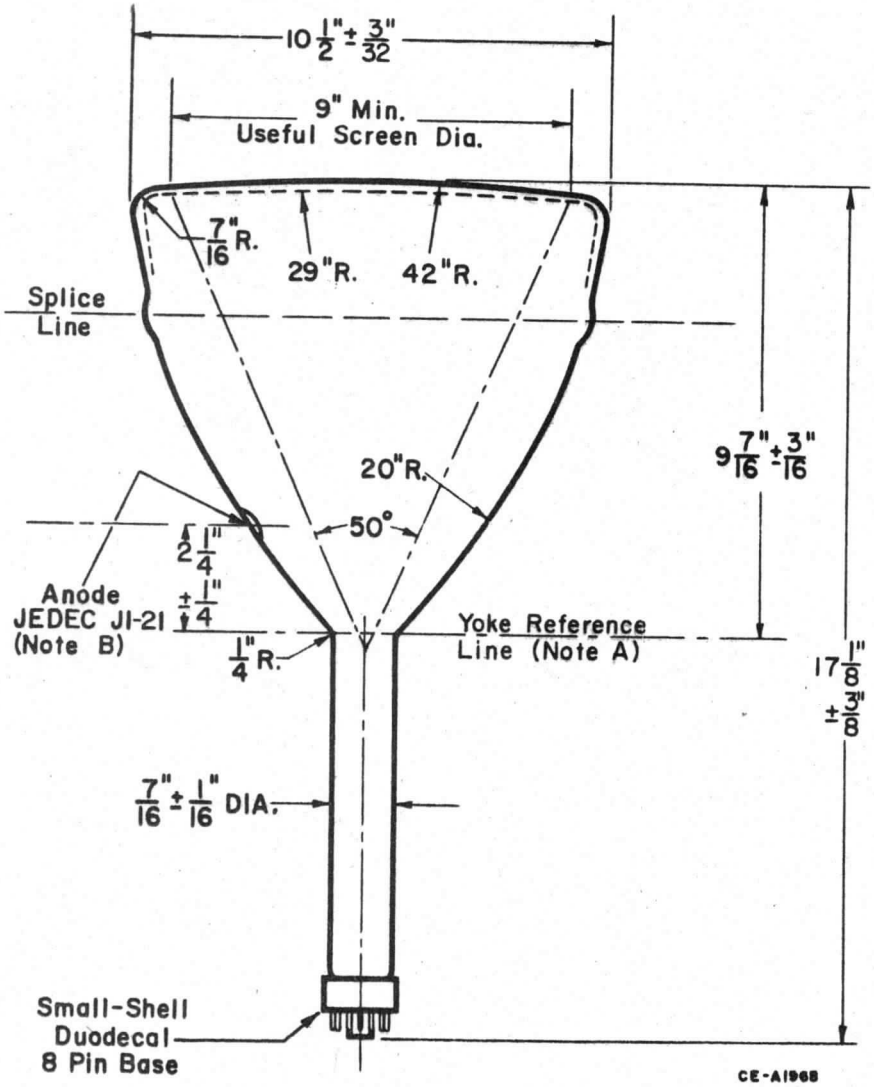

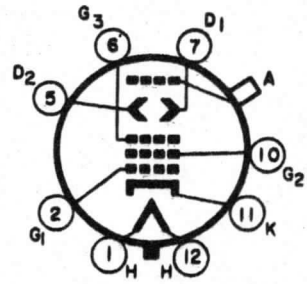

OUTLINE NOTES

A. The Yoke Reference Line is determined by JEDEC Reference Line Gage 112.

B. The plane defined by the tube axis and pin position #3 will be within 10° of the plane defined by the tube axis and the anode.

Westinghouse DEVELOPMENTAL DEVICE
Tentative Data

Westinghouse

DEVELOPMENTAL DEVICE
Tentative Data

WX- 4949P-

February 21, 1963

1 1/2" TUBE TYPE WX-4949P-

BASIC CHARACTERISTICS	TYPICAL APPLICATIONS	SPECIAL FEATURES
1 1/2" Round Glass 30° Magnetic Deflection Electrostatic Focus Aluminized Screen	Direct Contact Photographic Recording	0.00075" Line Width Flat Fiber Optic Faceplate

ELECTRICAL

Cathode	Coated Unipotential
Heater:	
Voltage	6.3 Volts
Current	0.60 Ampere
Direct Interelectrode Capacitances:	
Grid 1 to All Other Electrodes	9 μμf
Grid 2 to All Other Electrodes	7 μμf
Cathode to All Other Electrodes	7 μμf
Focusing Method	Electrostatic
Deflection	30° Magnetic

MECHANICAL

Mounting Position	Any
Screen Diameter (Note 1)	1" Min.
Faceplate:	
Configuration (Note 2)	Flat
Glass	Fiber Optic
Numerical Aperture	0.66
Bulb Dimensions:	
Diameter	1 7/16" ± 1/16"
Overall Length	11 3/4" + 1/4"
Anode Terminal	AMP#832692
Base	JEDEC B6-63

Δ The WX- number identifies a specific laboratory design; the design and, consequently, the data and type number are subject to change. No obligations are assumed to manufacture this particular device in the future unless otherwise arranged. These drawings and specifications are the property of Westinghouse Electric Corporation, Electronic Tube Division, and shall not be reproduced or copied or used as the basis for the manufacture or sale of apparatus and/or devices without permission.

WESTINGHOUSE ELECTRIC CORPORATION, ELECTRONIC TUBE DIVISION, ELMIRA, NEW YORK

Los Angeles 17, California
600 St. Paul Avenue
Phone HUntley 2-9660

Elmira, New York
Box 284
Phone REgent 9-3611

Chicago 9, Illinois
2211 W. Pershing Road
Phone WHitehall 4-3860

Detroit 32, Michigan
Box 502, 5757 Trumbull Ave.
Phone TRinity 2-7010

San Lorenzo, California
2222 Grant Avenue
Phone EXbrook 2-5353

Washington 6, D.C.
1625 K Street N.W.
Phone NAtional 8-8843

Boston, Massachusetts
10 High Street
Phone LIberty 2-0600

Bloomfield, New Jersey
MacArthur Avenue
Phone HUmbolt 4-3000

MAXIMUM RATINGS

Absolute Maximum Values

Anode Voltage	12000 max. Volts
Grid 3 (Focus) Voltage	2750 max. Volts
Grid 2 Volts	500 max. Volts
Grid 1 Volts:	
Negative Bias Value	180 max. Volts
Positive Bias Value	0 max. Volts
Positive Peak Value	0 max. Volts
Peak Heater-Cathode Voltage:	
Heater Negative with respect to Cathode:	
During warm-up period of 15 sec. max.	410 max. Volts
After Equipment warm-up period	180 max. Volts
Heater Positive with respect to Cathode	180 max. Volts

LIMITING CIRCUIT VALUES

Grid 1 Circuit Resistance	1.5 max. Megohms

TYPICAL OPERATING CONDITIONS

Anode Voltage	10000 Volts
Grid 3 (Focus) Voltage	2000 to 2500 Volts
Grid 2 Voltage	300 Volts
Grid 1 Spot Cutoff Voltage	-35 to -75 Volts
Line Width (Note 3, P11)	0.00075 Inch

NOTES

1. Westinghouse Military & Industrial Cathode Ray Tubes can be supplied with most of the standard JEDEC phosphors.
2. The faceplate is a ground and polished flat plate 0.20" ± 0.020" thick. Maximum deviation from flatness is 0.001" within a circle of 1" diameter centered on the tube axis.
3. Line width is defined as the distance between the half-amplitude points of the light-energy distribution of the line and is measured with a peak current of 2 micro-amperes, using the slit-scan technique described in Ⓦ reprint #5510. Line width with other phosphors may vary slightly.

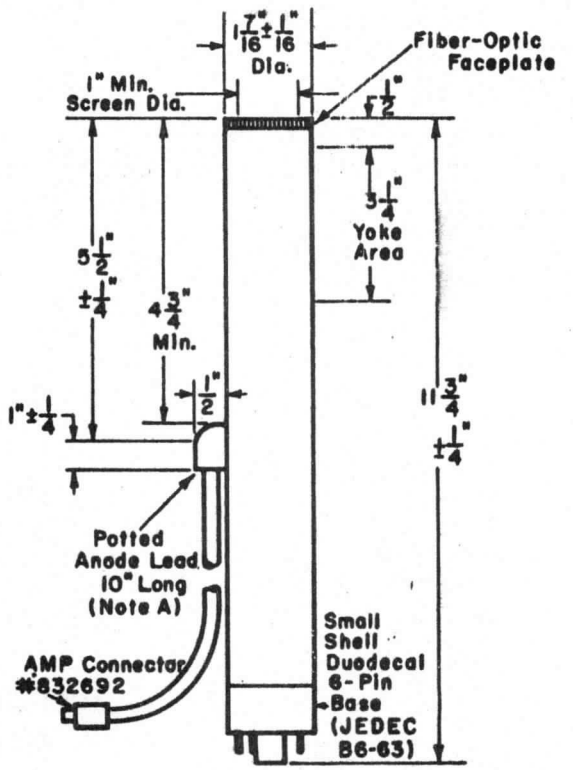

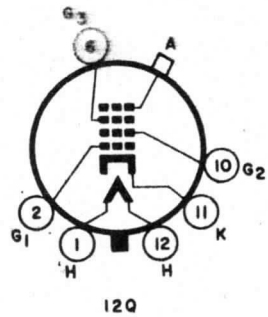

120

OUTLINE NOTE

A. The plane defined by the tube axis and pin position 3 will be within 10° of the plane defined by the tube axis and the anode.

4" INDUSTRIAL & MILITARY CATHODE RAY TUBE TYPE WX-4965P-

Basic Characteristics	Typical Applications	Special Features
4" Round Flat Faceplate Electrostatic Focus 42° Magnetic Deflection	Flying-Spot Scanning	Spot Diameter 0.0015" Single-Axis Electrostatic Microdeflection Encapsulated Anode Lead

ELECTRICAL

Cathode	Coated Unipotential
Heater:	
Voltage	6.3 Volts
Current	0.6 Ampere
Direct Interelectrode Capacitances:	
Grid 1 to all other Electrodes	9 pF
Grid 2 to all other Electrodes	7 pF
Cathode to all other Electrodes	7 pF
D1 to D2	5 pF
D1 to all other Electrodes except D2	10 pF
D2 to all other Electrodes except D1	10 pF
Focusing Method	Electrostatic
Deflection	42° Magnetic
Microdeflection	Electrostatic

OPTICAL

Screen Phosphor	Note 1
Faceplate:	
Configuration (Note 2)	Flat
Glass	Clear
Index of Refraction	1.506

MECHANICAL

Mounting Position	Any
Net Weight (Approx.)	1 1/4 Pounds

Δ The WX- number identifies a specific laboratory design; the design and, consequently, the data and type number are subject to change. No obligations are assumed to manufacture this particular device in the future unless otherwise arranged. These drawings and specifications are the property of Westinghouse Electric Corporation, Electronic Tube Division, and shall not be reproduced or copied or used as the basis for the manufacture or sale of apparatus and/or devices without permission.

MAXIMUM RATINGS

Absolute Maximum Values

Anode Voltage (Note 3)	22000 max. Volts
Grid 3 (Focus) Voltage	5500 max. Volts
Grid 2 Voltage	600 max. Volts
Grid 1 Voltage:	
Negative Bias Value	180 max. Volts
Positive Bias Value	0 max. Volts
Positive Peak Value	0 max. Volts
Peak Heater-Cathode Voltage:	
Heater Negative with respect to Cathode:	
During warm-up period of 15 sec. max.	410 max. Volts
After Equipment warm-up period	180 max. Volts
Heater Positive with respect to Cathode	180 max. Volts

LIMITING CIRCUIT VALUE

Grid 1 Circuit Resistance	1.5 max. Megohms

TYPICAL OPERATING CONDITIONS

Anode Voltage (Note 3)	10000	20000 Volts
Grid 3 (Focus) Voltage	2400 to 2700	4800 to 5400 Volts
Grid 2 Voltage	300	300 Volts
Grid 1 Spot Cutoff Voltage	-40 to -70	-40 to -70 Volts
Line Width (Note 4, P11)	0.0015	0.0015 Inch
Spot Position (Note 5)		4 mm
Auxiliary Deflection Plate Sensitivity (Note 6)	0.002	0.001 In./ Volt

NOTES

1. Westinghouse Military & Industrial Cathode Ray Tubes can be supplied with most of the standard JEDEC phosphors.
2. The faceplate is a ground and polished flat plate 0.240" ± 0.020" thick with a max. deviation from mean thickness for individual plates of ±0.001". Maximum deviation from flatness is ±0.006" within a circle of 3 1/4" diameter centered on the tube axis.
3. Operation with voltage in excess of 16KV may require shielding to limit radiation of very soft X-rays.
4. Line width is defined as the distance between the half-amplitude points of the light-energy distribution of the line and is measured with a peak current of 1.0 microamperes, using the slit-scan technique described in reprint #5510. Line width with other phosphors may vary slightly.
5. With the tube shielded against external magnetic fields, the undeflected focused spot lies within a circle of 4 mm radius concentric with the faceplate.
6. Deflection voltages must be balanced around the center focus voltage with the center value of deflection well clamped to the focus voltage. Deflection in excess of 0.050" may result in excessive spot distortion.

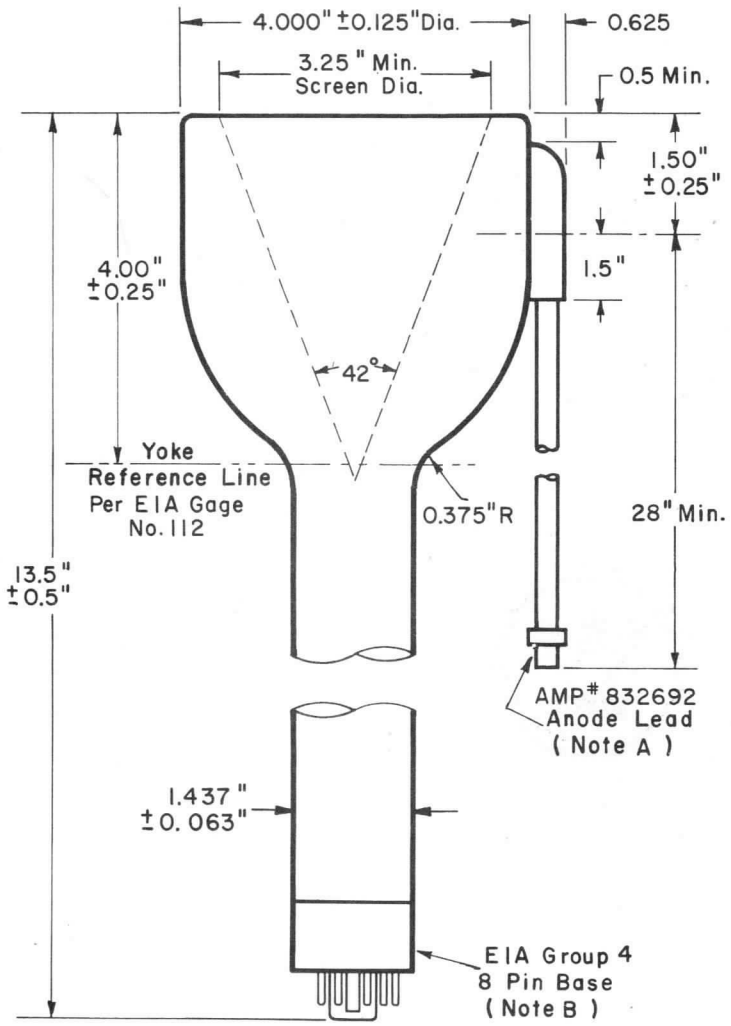

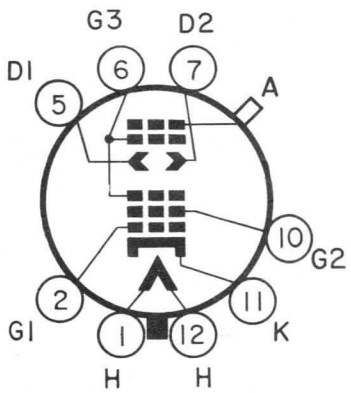

OUTLINE NOTES

A. The plane defined by the tube axis and the base key will be 90° ± 10° from the plane defined by the tube axis and the anode.

B. D1-D2 trace alines with base key. Positive voltage on D1 (pin 5) will move spot toward base key.



The information contained herein is supplied without assuming responsibility for infringement of patents or other rights of third parties which may result from its use. No license is granted by implication or otherwise under any patent or patent rights of Westinghouse Electric Corporation.

WESTINGHOUSE ELECTRIC CORPORATION, ELECTRONIC TUBE DIVISION, ELMIRA, NEW YORK

5" MILITARY & INDUSTRIAL CATHODE RAY TUBE TYPE WX-5006P-

Basic Characteristics	Typical Applications	Special Features
5" Round Flat Faceplate Electrostatic Deflection Electrostatic Focus	Oscillographic	6 cm X 10 cm Scan High Deflection Sensitivity Low Deflection Plate Capacitances Post-Deflection Acceleration

ELECTRICAL

Cathode	Coated Unipotential
Heater:	
Voltage	6.3 Volts
Current	0.6 Ampere
Direct Interelectrode Capacitances:	
Grid 1 to all other Electrodes	5 pf
Cathode to all other Electrodes	5 pf
D1 to D2	2.5 pf
D3 to D4	1.75 pf
D1 to all other Electrodes	4 pf
D2 to all other Electrodes	4 pf
D3 to all other Electrodes	3 pf
D4 to all other Electrodes	3 pf
Focusing Method	Electrostatic
Deflection	Electrostatic

OPTICAL

Screen Phosphor	Note 1
Faceplate:	
Configuration	Flat
Glass	Clear
Transmission	92 %

MECHANICAL

Mounting Position	Any
Net Weight	2.2 Pounds

Δ The WX- number identifies a specific laboratory design; the design and, consequently, the data and type number are subject to change. No obligations are assumed to manufacture this particular device in the future unless otherwise arranged. These drawings and specifications are the property of Westinghouse Electric Corporation, Electronic Tube Division, and shall not be reproduced or copied or used as the basis for the manufacture or sale of apparatus and/or devices without permission.

ABSOLUTE MAXIMUM RATINGS

Anode 3 Voltage	4400 max. Volts
Interplate Shield Voltage	2700 max. Volts
Anode 2 Voltage	2700 max. Volts
Anode 1 (Focus) Voltage	1100 max. Volts
Grid 1 Voltage:	
Negative Bias Value	180 max. Volts
Positive Bias Value	0 max. Volts
Positive Peak Value	0 max. Volts
Peak Heater-Cathode Voltage:	
Heater Negative with respect to Cathode:	
During warm-up period of 15 sec. max.	410 max. Volts
After equipment warm up	180 max. Volts
Heater Positive with respect to Cathode	180 max. Volts
Peak Voltage between Anode 2 and any Deflection Electrode	550 max. Volts
Mean Anode 2 Dissipation	6 max. Volts
Ratio of Anode 3 Voltage to Anode 2 Voltage (Note 2)	2.4 max.

LIMITING CIRCUIT VALUES

Grid 1 Circuit Resistance	1.5 max. Megohms
Deflection Electrode Circuit Resistance (Note 3)	0.1 max. Megohm

TYPICAL OPERATION & PERFORMANCE

Anode 3 Voltage	3000 Volts
Anode 2 Voltage	1500 Volts
Anode 1 (Focus) Voltage (Note 4)	250 to 470 Volts
Anode 1 (Focus) Current (Note 4)	-15 to +10 μA
Interplate Shield Voltage for Minimum Pattern Distortion	1350 to 1650 Volts
Grid 1 Spot Cutoff Voltage	-30 to -70 Volts
Min. Light Output with P1 (Note 5)	5 Ft-L
Max. Modulation (Note 5)	35 Volts
Max. Cathode Current at 10 μA Screen Current	600 μA
Max. Line Width "A" with P1 (Note 5)	0.020 Inch
Deflection Factors:	
D1 D2	46 to 58 V/Inch
D3 D4	29 to 35 V/Inch
Angle Between Traces	89 to 91 Degrees
Deflection Factor Uniformity (Note 6)	1.5 %
Pattern Distortion (Note 7)	1.25 %
Spot Position (Note 8)	0.5 Inch
Min. Useable Raster Size: (Note 9)	
Vertical	6 cm
Horizontal	10 cm

NOTES

1. Westinghouse Military & Industrial Cathode Ray Tubes can be supplied with most of the standard JEDEC phosphors.

2. Ratios in excess of 2.4 will reduce the Min. Useable Raster Size and increase pattern distortion.

3. It is recommended that deflection electrode circuit resistances be approximately equal.

4. For all values of Grid 1 voltage between 0 and cut-off.

5. Measured in accordance with MIL-E-1 specification at 10 uA Ib3 (2" X 2" raster).

6. The deflection factor (for both D1D2 and D3D4 plate pairs separately) for any deflection of less than 75% of the useful scan will not differ from the deflection factor at 25% of the useful scan by more than 1.5%.

7. With $\frac{Eb3}{Eb2} = 2$ and with deflection voltages balanced about Anode 2 voltage, it will be possible to adjust the Inter Plate Shield voltage so that the periphery of the raster pattern is between 2 concentric rectangles of 3.94" X 2.36" and 3.86" X 2.30".

8. With deflecting electrodes connected to Anode 2 and with the tube shielded against external magnetic fields, the focussed spot is within a 1/2" square centered on the tube face and with sides parallel to the scanning axes.

9. Centered with respect to the faceplate and at an $\frac{Eb3}{Eb2}$ ratio of 2.4.

Westinghouse

DEVELOPMENTAL DEVICE
Tentative Data

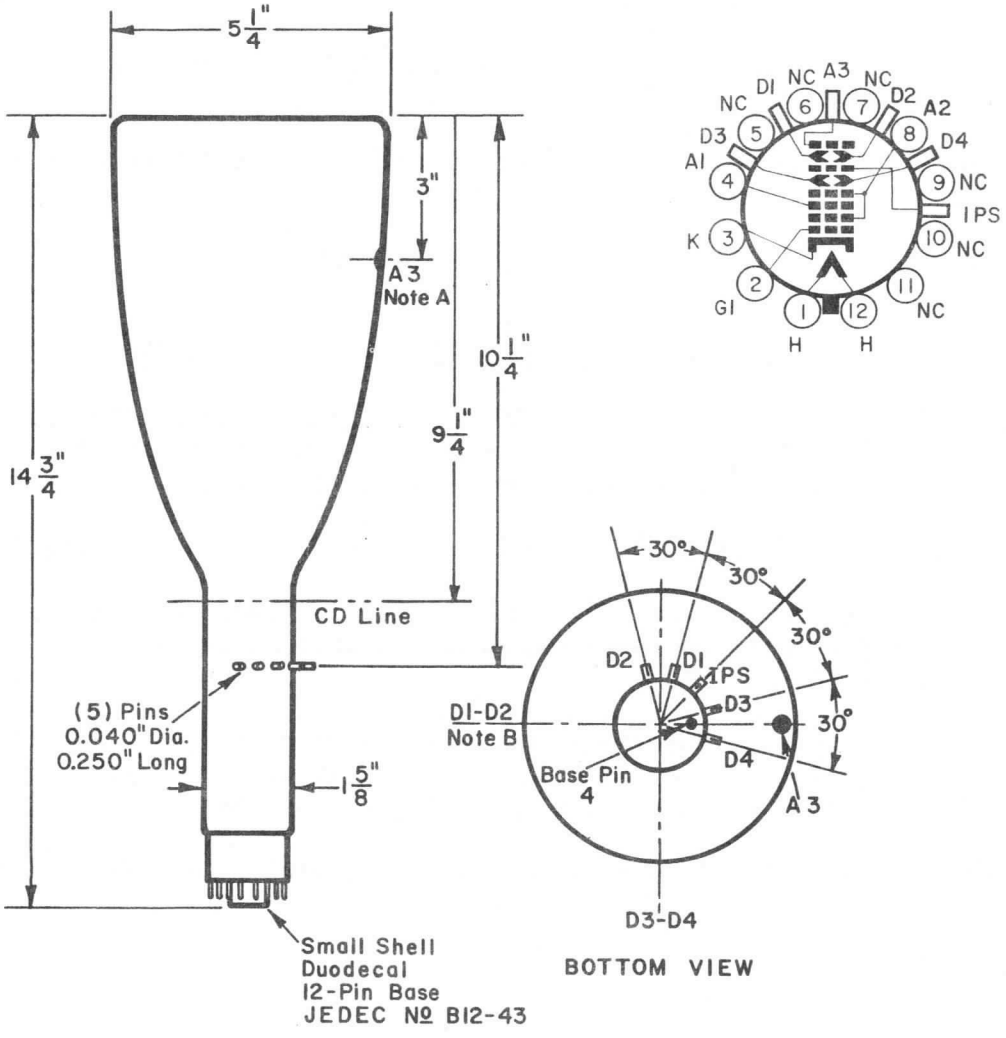

OUTLINE NOTES

A. The plane defined by the tube axis and pin position 4 will be within 10° of the plane defined by the tube axis and the Anode 3.

B. D1-D2 trace alinement with plane defined by base pin position 4 and tube axis has an angular tolerance of 10°. Angle between D1-D2 trace and D3-D4 trace is 90° ± 1°. Positive voltage on D1 will move spot toward pin 4. Positive voltage on D3 will move spot toward pin 1.

3" MILITARY & INDUSTRIAL CATHODE RAY TUBE TYPE WX-5013P-

Basic Characteristics	Typical Applications	Special Features
3" Round Flat Face Electrostatic Focus Electrostatic Deflection	Photographic Recording Oscillographic	High Deflection Sensitivity Integral Magnetic Neck Shield

ELECTRICAL

Cathode	Coated Unipotential
Heater:	
Voltage	6.3 Volts
Current	0.60 Ampere
Direct Interelectrode Capacitances:	
Grid 1 to all other Electrodes	7.5 pf
D1 to D2	5.2 pf
D3 to D4	7.0 pf
D1 to all other Electrodes	10.1 pf
D2 to all other Electrodes	7.5 pf
D3 to all other Electrodes	8.1 pf
D4 to all other Electrodes	9.2 pf
Focusing Method	Electrostatic
Deflection	Electrostatic

OPTICAL

Screen phosphor	Note 1
Faceplate:	
Configuration	Flat
Glass	Clear
Transmission	85%
Index of Refraction	1.507

MECHANICAL

Mounting Position	Any
Net Weight	2 Pounds

Δ The WX- number identifies a specific laboratory design; the design and, consequently, the data and type number are subject to change. No obligations are assumed to manufacture this particular device in the future unless otherwise arranged. These drawings and specifications are the property of Westinghouse Electric Corporation, Electronic Tube Division, and shall not be reproduced or copied or used as the basis for the manufacture or sale of apparatus and/or devices without permission.

Westinghouse

DEVELOPMENTAL DEVICE
Tentative Data

ABSOLUTE MAXIMUM RATINGS

Anode 2 Voltage	3000 max. Volts
Peak Voltage between Anode 2 and any Deflecting Electrode	550 max. Volts
Anode 1 (Focus) Voltage	1300 max. Volts
Grid 1 Voltage:	
Negative Bias Value	200 max. Volts
Positive Bias Value	0 max. Volts
Positive Peak Value	0 max. Volts
Peak Heater-Cathode Voltage:	
Heater Negative with respect to Cathode:	
During warm-up period of 15 sec. max.	410 max. Volts
After Equipment warm-up period	180 max. Volts
Heater Positive with respect to Cathode	180 max. Volts

LIMITING CIRCUIT VALUES

Grid 1 Circuit Resistance	1.5 max. Megohms
Any Deflecting Electrode Circuit Resistance	5 max. Megohms

TYPICAL OPERATING CONDITIONS

Anode 2 Voltage	1500 Volts
Anode 1 (Focus) Voltage	150 to 450 Volts
Grid 1 Spot-Cutoff Voltage (max.)	-90 Volts
Line Width (Note 2)	0.020 Inch
Spot Position (Note 3)	15 mm
Deflection Sensitivity: D1 to D2	0.010 to 0.0125"/Volt
D3 to D4	0.0167 to 0.025"/Volt

NOTES

1. Westinghouse Military & Industrial Cathode Ray Tubes can be supplied with most of the standard JEDEC phosphors.

2. Line width is measured by the shrinking raster method at a brightness of 4.5 foot-lamberts on a 50 mm x 50 mm raster.

3. With deflecting electrodes connected to anode 2, and with the tube shielded against external magnetic fields, the focused spot is within a 15 mm square centered on the tube face and with sides parallel to scanning axes.

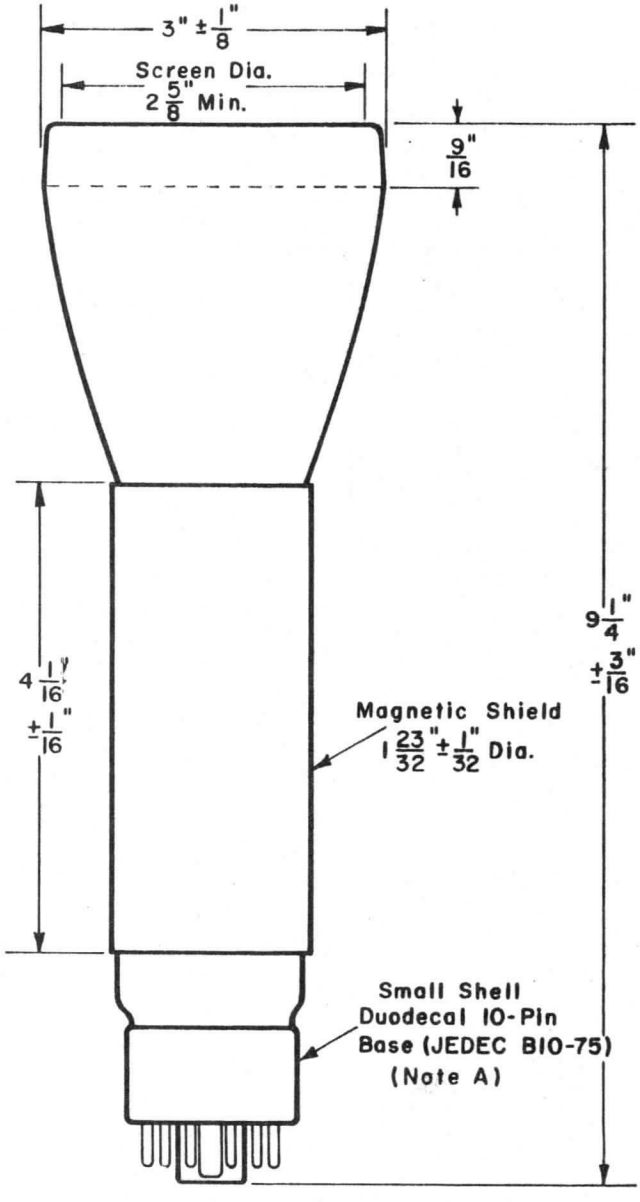

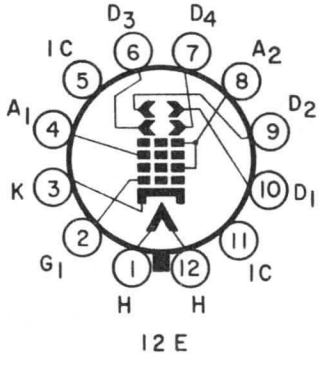

12 E

OUTLINE NOTE

A. D1-D2 trace alinement with plane defined by base pin 4 and tube axis has an angular tolerance of 10°. Angle between D1-D2 trace and D3-D4 trace is 90° ± 3°. Positive voltage on D1 (pin 10) will move spot toward pin 4. Positive voltage on D3 (pin 6) will move spot toward pin 1.

Industrial & Military CRT

Westinghouse

Type: WX-5039P-★

Magnetic Deflection, **Low Voltage Focus**
Line Width = 0.012″
7″ Round with Laminated **Faceplate**

Basic Characteristics

53° Magnetic Deflection
Low Voltage Focus
7″ Round Spherical Faceplate
Aluminized Screen

Typical Applications

Radar
Oscillographic

Special Features

Laminated Faceplate for
Implosion Protection

Electrical

Cathode	Coated Unipotential
Heater:	
Voltage	6.3 Volts
Current	0.6 Ampere
Direct Interelectrode Capacitances:	
Grid 1 to All Other Electrodes	6 pF
Cathode to All Other Electrodes	5 pF
Focusing Method	Low Voltage Electrostatic
Deflection	53° Magnetic

Optical

Screen Phosphor	Note 1
Faceplate:	
Configuration	Spherical
Glass	Clear
Transmission	75%

Mechanical

Mounting Position	Any
Net Weight	6 Pounds

Absolute Maximum Ratings

Anode Voltage	12000 max. Volts
Grid 4 (Focus) Voltage	1000 max. Volts
Grid 1 Voltage:	
Negative Bias Value	180 max. Volts
Positive Bias Value	0 max. Volts
Positive Peak Value	0 max. Volts
Heater-Cathode Voltage:	
Heater Negative with respect to Cathode:	
During Warm up Period of 15 sec. max.	410 max. Volts
After Equipment warm-up Period	180 max. Volts
Heater Positive with respect to Cathode:	
Peak	180 max. Volts
DC	0 max. Volts

Limiting Circuit Values

Grid 1 Circuit Resistance	1.5 max. Megohms

Typical Operating Conditions & Performance

Anode Voltage	7000 Volts
Grid 4 (Focus) Voltage	0 to 250 Volts
Grid 2 Voltage	300 Volts
Grid 1 Spot Cut-off Voltage	−33 to −77 Volts
Line Width (Note 2)	0.012 Inch
Spot Position (Note 3)	0.125 Inch

Notes

1. Westinghouse Military & Industrial Cathode Ray Tubes can be supplied with most of the standard JEDEC phosphors.
2. Line width is measured by the shrinking raster method at 100 microamperes beam current.
3. With the tube shielded against external magnetic fields, the undeflected focused spot lies within a circle of 0.125″ radius concentric with the faceplate.

★ The WX-number identifies a specific laboratory design; the design and, consequently, the data and type number are subject to change. No obligations are assumed to manufacture this particular device in the future unless otherwise arranged. These drawings and specifications are the property of Westinghouse Electric Corporation, Electronic Tube Division, and shall not be reproduced or copied or used as the basis for the manufacture or sale of apparatus and/or devices without permission.

May 1969
Supersedes TD 86-766 Page 5 dated March 1969
S6−8E−9E, TC−2236

Industrial & Military CRT

Type: WX-5039P-

Magnetic Deflection, Low Voltage Focus
Line Width = 0.012"
7" Round with Laminated Faceplate

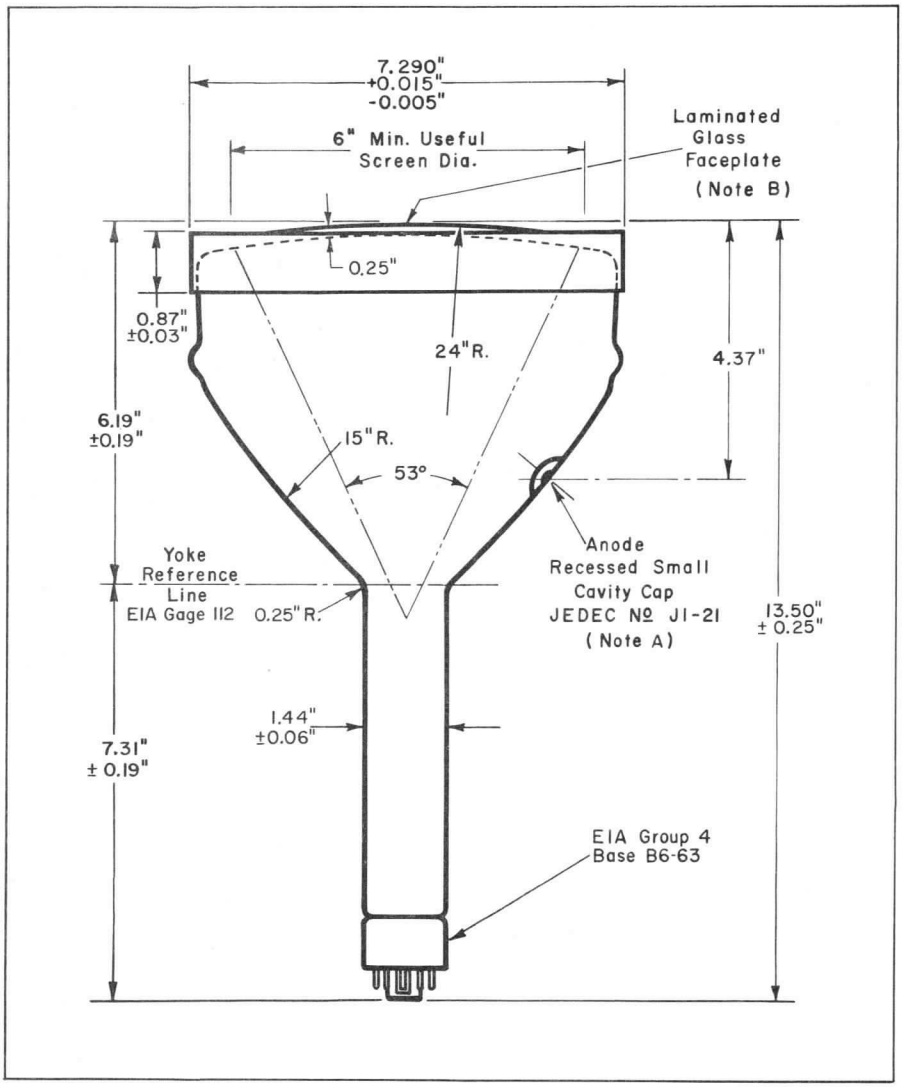

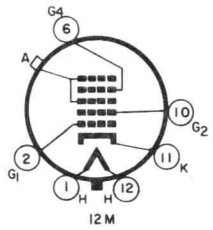

Outline Notes

A. The plane defined by the tube axis and pin position 3 will be within 10° of the plane defined by the tube axis and the anode.

B. Implosion protection is provided by bonding a formed glass panel to the faceplate.

Westinghouse Electric Corporation
Electronic Tube Division, Elmira, N. Y. 14902
Printed in U. S. A.

HIGH RESOLUTION CATHODE RAY TUBE TYPE WX-5062P11

Basic Characteristics	Typical Applications	Special Features
40° Magnetic Deflection Electrostatic Focus 3" Flat Faceplate	Aerial Photographic Recording	Spot Diameter 0.000675"

ELECTRICAL

Cathode	Coated Unipotential
Heater:	
Voltage	6.3 Volts
Current	0.6 Ampere
Direct Interelectrode Capacitances:	
Grid 1 to all other Electrodes	24 pf
Cathode to all other Electrodes	17 pf
Focusing Method	Electrostatic
Deflection	40° Magnetic

OPTICAL

Screen Phosphor (Note 1)	P11
Faceplate:	
Configuration (Note 2)	Flat
Glass	Clear
Transmission	90%
Index of Refraction	1.506

MECHANICAL

Mounting Position	Any
Net Weight	Approx. 1 Pound 6 Ounces

ENVIRONMENTAL CAPABILITY

The WX-5062P11 will withstand, without damage, vibration at 20 G from 55 to 500 cps and will operate without degradation of performance while subjected to vibration at 0.23" double amplitude up to 25 cps and at 5G from 25 to 500 cps.

Δ The WX- number identifies a specific laboratory design; the design and, consequently, the data and type number are subject to change. No obligations are assumed to manufacture this particular device in the future unless otherwise arranged. These drawings and specifications are the property of Westinghouse Electric Corporation, Electronic Tube Division, and shall not be reproduced or copied or used as the basis for the manufacture or sale of apparatus and/or devices without permission.

ABSOLUTE MAXIMUM RATINGS

Anode Voltage	15000 max. Volts
Grid 3 (Focus) Voltage (Note 3)	5000 max. Volts
Grid 2 Voltage	600 max. Volts
Grid 1 Voltage:	
Negative Bias Value	180 max. Volts
Positive Bias Value	0 max. Volts
Positive Peak Value	0 max. Volts
Peak Heater-Cathode Voltage:	
Heater Negative with respect to Cathode:	
During warm-up period of 15 sec. max.	410 max. Volts
After Equipment warm-up period	180 max. Volts
Heater Positive with respect to Cathode	180 max. Volts

LIMITING CIRCUIT VALUES

Grid 1 Circuit Resistance	1.5 max. Megohms
Grid 2 Circuit Resistance	See Note 4

TYPICAL OPERATING CONDITIONS

Anode Voltage	10000 Volts
Grid 3 (Focus) Voltage (Note 3)	1900 to 2300 Volts
Grid 2 Voltage	300 Volts
Grid 1 Spot Cutoff Voltage	-40 to -70 Volts
Spot Diameter for P11 (Note 5):	
Center	0.000675 Inch

NOTES

1. Westinghouse Military & Industrial Cathode Ray Tubes can be supplied with most of the standard JEDEC phosphors.

2. Maximum deviation from flatness if 0.001" within a circle of 2" diameter centered on the tube axis. Faceplate tilt relative to the tube axis is 0.3° maximum.

3. The grid 3 electrode may draw a peak current of 2 milliamperes with a representative value of 300 microamperes under normal operation.

4. A grid 2 circuit resistance of approximately 0.5 megohm should be provided. In addition it is recommended that a suitable device be used to limit grid 2 voltage to the maximum rated value to prevent tube damage in case of a momentary arc.

5. Spot diameter is defined as the distance between the half-amplitude points of the light-energy distribution of the spot and is measured with a peak current of 1 microampere, using the slit-scan technique described in Ⓦ reprint #5510. Spot diameter with other phosphors may vary slightly. Dynamic focus modulation is necessary to maintain optimum resolution over entire face. Close control of supply regulation and ripple is necessary to ensure optimum focus. Typically, a 0.1% change in focus or anode voltage, from best value, will increase spot size approximately 10%.

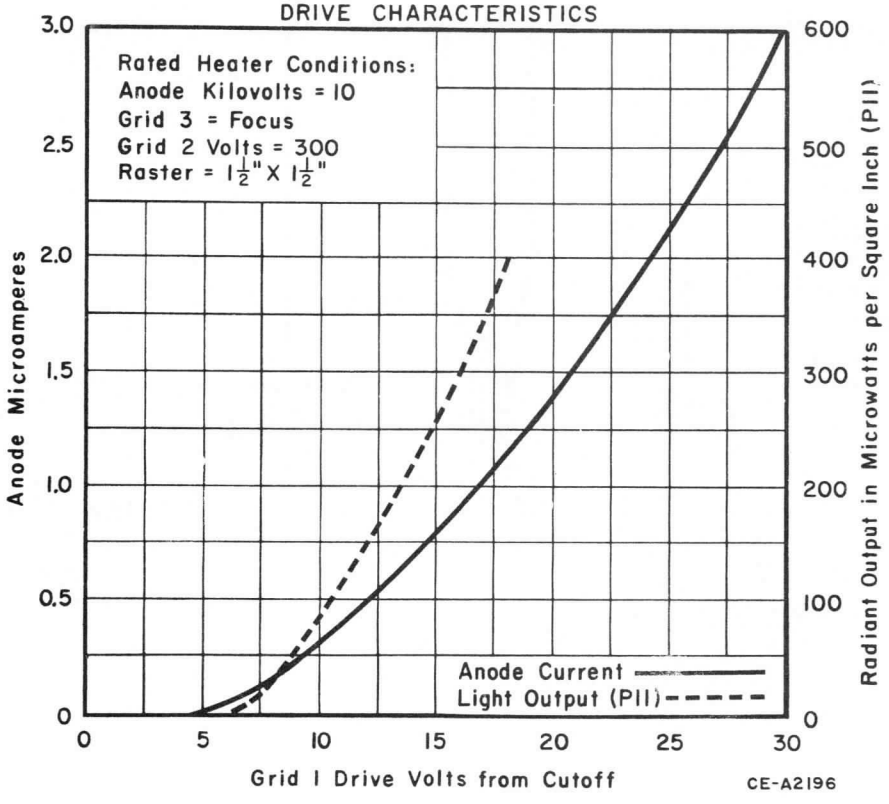

Westinghouse TENTATIVE DATA

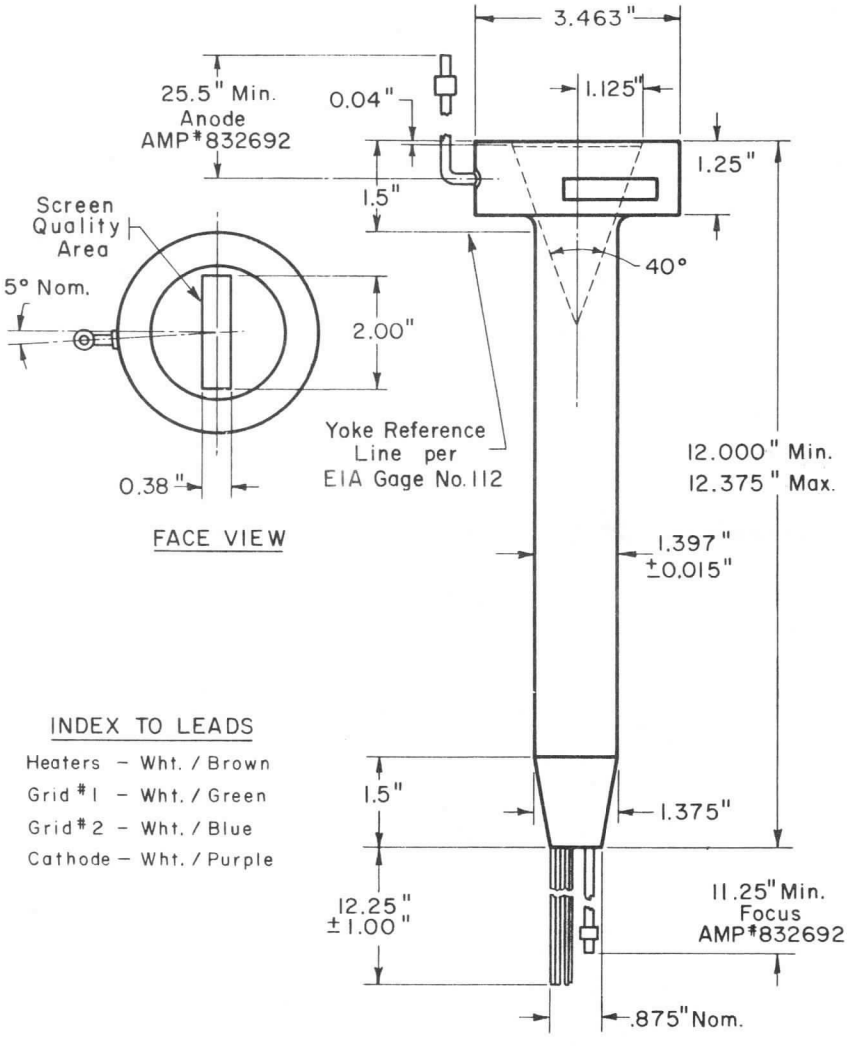

10" MILITARY & INDUSTRIAL CATHODE RAY TUBE TYPE WX-5064P-

Basic Characteristics	Typical Applications	Special Features
10" Rectangular Low Voltage Electrostatic Focus 90° Magnetic Deflection	Monitor	0.0085" Line Width

ELECTRICAL

Cathode	Coated Unipotential
Heater:	
Voltage	6.3 Volts
Current	0.6 Ampere
Direct Interelectrode Capacitances:	
Grid 1 to all other Electrodes	9 pf
Grid 2 to all other Electrodes	7 pf
Cathode to all other Electrodes	7 pf
Focusing Method	Low Voltage Electrostatic
Deflection	90° (Diag.) Magnetic

OPTICAL

Screen Phosphor	Note 1
Faceplate:	
Configuration	Spherical
Glass	Neutral Gray
Transmission	81%

MECHANICAL

Mounting Position	Any
Net Weight (Approx.)	4.5 Pounds

ABSOLUTE MAXIMUM RATINGS

Anode Voltage	14000 max. Volts
Grid 4 (Focus) Voltage	-500 to +1000 max. Volts
Grid 2 Voltage	600 max. Volts
Grid 1 Voltage:	
Negative Bias Value	180 max. Volts
Positive Bias Value	0 max. Volts
Positive Peak Value	0 max. Volts
Peak Heater-Cathode Voltage:	
Heater Negative with respect to Cathode:	
During warm-up period of 15 sec. max.	410 max. Volts
After Equipment warm-up period	180 max. Volts
Heater Positive with respect to Cathode	180 max. Volts

Δ The WX- number identifies a specific laboratory design; the design and, consequently, the data and type number are subject to change. No obligations are assumed to manufacture this particular device in the future unless otherwise arranged. These drawings and specifications are the property of Westinghouse Electric Corporation, Electronic Tube Division, and shall not be reproduced or copied or used as the basis for the manufacture or sale of apparatus and/or devices without permission.

Westinghouse

DEVELOPMENTAL DEVICE
Tentative Data

LIMITING CIRCUIT VALUES

Grid 1 Circuit Resistance	1.5 max. Megohms
Grid 2 Circuit Resistance	See Note 2
Focus Electrode Circuit Resistance	10000 min. Ohms

TYPICAL OPERATING CONDITIONS

Anode Voltage	10000 Volts
Grid 4 (Focus) Voltage	0 to 300 Volts
Grid 2 Voltage	300 Volts
Grid 1 Spot Cutoff Voltage	-35 to -75 Volts
Line Width for P4 (Note 3)	0.0085 Inch
Spot Position (Note 4)	15 mm

NOTES

1. Westinghouse Military & Industrial Cathode Ray Tubes can be supplied with most of the standard JEDEC phosphors.

2. A grid 2 circuit resistance of approximately 0.5 megohm should be provided.

3. Line width is measured by the shrinking raster method with a beam current of 40 microamperes.

4. With the tube shielded against external magnetic fields, the undeflected focused spot lies within a circle of 15 mm radius concentric with the faceplate.

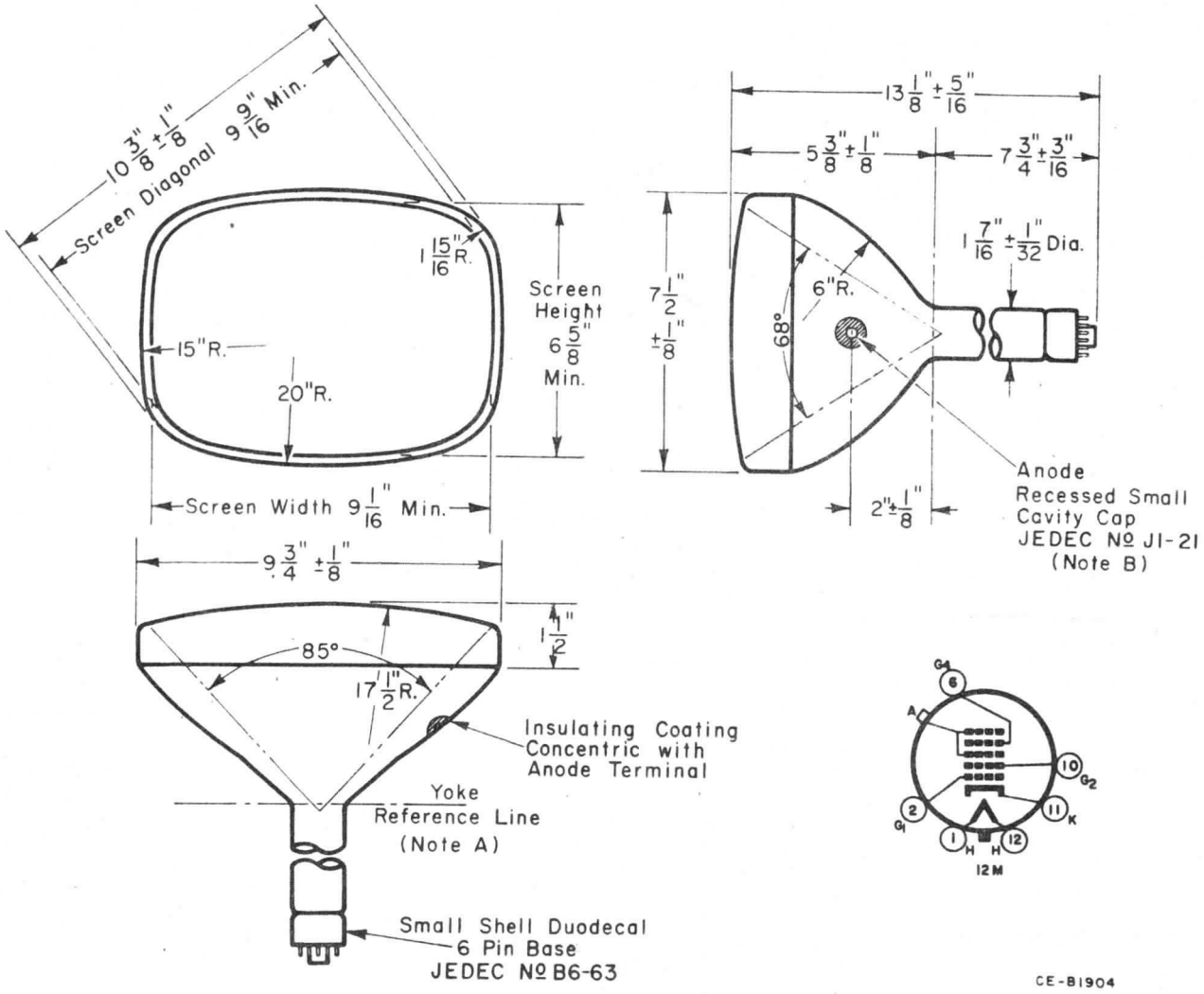

A. The Yoke Reference Line is determined by JEDEC Reference Line Gage No. 116.

B. The plane defined by the tube axis and pin position 3 will be within 10° of the plane defined by the tube axis and the anode.

Industrial & Military CRT

Westinghouse

Type: WL-5078P-

Electrostatic Focus & Deflection
Line Width = 0.020″
3″ Round Flat Faceplate

Basic Characteristics

3″ Round Flat Faceplate
Electrostatic Focus
Electrostatic Deflection

Typical Applications

Photographic Recording
Osscillograph

Special Features

High Deflection
Sensitivity
0.020″ Line Width

Electrical

Cathode	Coated Unipotential
Heater:	
Voltage	6.3 Volts
Current	0.60 Ampere
Direct Interelectrode Capacitances:	
Grid 1 to all Other Electrodes	7.5 pF
D1 to D2	5.2 pF
D3 to D4	7.0 pF
D1 to all Other Electrodes	10.1 pF
D2 to all Other Electrodes	7.5 pF
D3 to all Other Electrodes	8.1 pF
D4 to all Other Electrodes	9.2 pF
Focusing Method	Electrostatic
Deflection	Electrostatic

Optical

Screen Phosphor	Note 1
Faceplate:	
Configuration	Flat
Glass	Clear
Transmission	91%
Index of Refraction	1.507

Mechanical

Mounting Position	Any
Net Weight	2 Pounds

Absolute Maximum Ratings

Anode 2 Voltage	3000 max. Volts
Anode 1 (Focus) Voltage	1300 max. Volts
Grid 1 Voltage:	
Negative Bias Value	200 max. Volts
Positive Bias Value	0 max. Volts
Positive Peak Value	0 max. Volts
Heater-Cathode Voltage:	
Heater Negative with respect to Cathode:	
During warm-up period of 15 sec. max.	410 max. Volts
After Equipment warm-up period	180 max. Volts
Heater Positive with respect to Cathode:	
Peak	180 max. Volts
DC	0 max. Volts
Peak Voltage Between Anode 2 and any Deflection Electrode	550 max. Volts

Limiting Circuit Values

Grid 1 Circuit Resistance	1.5 max. Megohms
Resistance in Any Deflection Electrode Circuit	1 max. Megohms

Typical Operating Conditions

Anode 2 Voltage	1500 Volts
Anode 1 (Focus) Voltage	150 to 450 Volts
Grid 1 Spot Cut-off Voltage	−90 (max.) Volts
Line Width (Note 2)	0.020 Inch
Deflection Sensitivity:	
D1 D2	0.0100 to 0.0125 Inch/Volt
D3 D4	0.0167 to 0.0250 Inch/Volt
Spot Position (Note 3)	15 mm

Notes

1. Westinghouse Military & Industrial Cathode Ray Tubes can be supplied with most of the standard JEDEC phosphors.
2. Line width is measured by the shrinking raster method at a brightness of 4.5 foot-lamberts on a 50 mm x 50 mm raster.
3. With deflecting electrodes connected to anode 2, and with the tube shielded against external magnetic fields, the focused spot is within a 15 mm square centered on the tube face and with sides parallel to scanning axes.

The information contained herein is supplied without assuming responsibility for infringement of patents or other rights of third parties which may result from its use. No license is granted by implication or otherwise under any patent or patent rights of Westinghouse Electric Corporation.

December 1968
New Information
S6−2C−11C, S5−10A, WI−1300

Industrial & Military CRT

Type: WL-5078P-

Electrostatic Focus & Deflection
Line Width = 0.020″
3″ Round Flat Faceplate

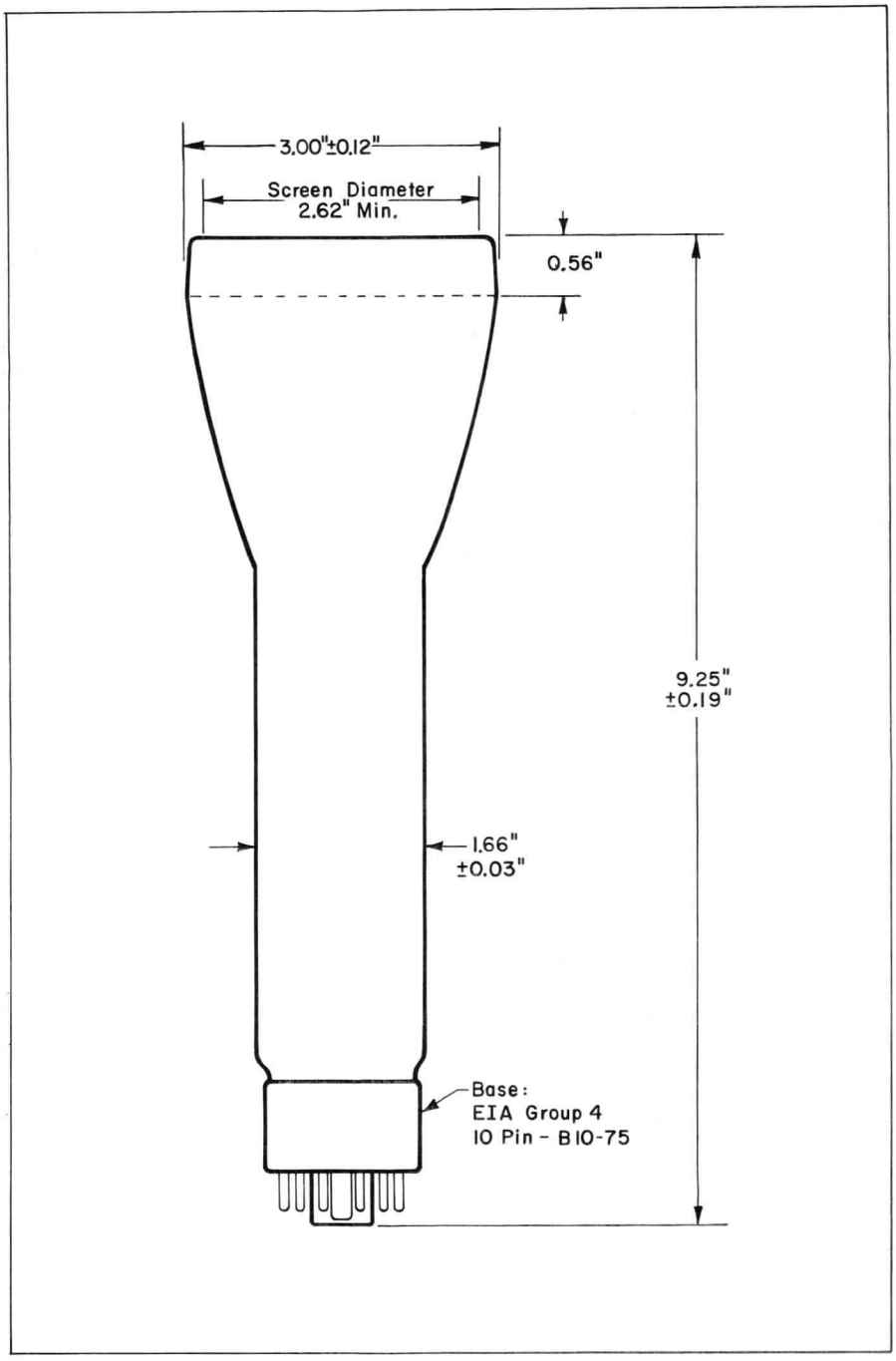

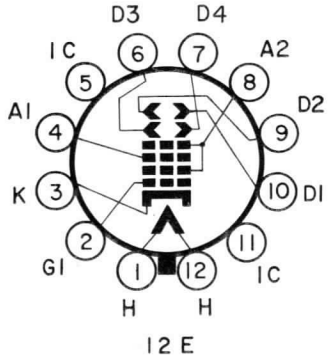

Outline Note

A. D1 - D2 trace alinement with plane defined by base pin 4 and tube axis has an angular tolerance of 10°. Angle between D1 - D2 trace and D3 - D4 trace is 90° ± 3°. Positive voltage on D1 (pin 10) will move spot toward pin 4. Positive voltage on D3 (pin 6) will move spot toward pin 1.

Westinghouse Electric Corporation
Electronic Tube Division, Elmira, N.Y. 14902
Printed in U.S.A.

5" MILITARY & INDUSTRIAL CATHODE RAY TUBE TYPE WX-5321P-

Basic Characteristics	Typical Applications	Special Features
5 1/4" Diameter Bulb Electrostatic Focus 42° Magnetic Deflection	Direct-Contact Photographic Recording	0.0007" Spot Size 1/4" x 4 1/4" Cylindrical Fiber-Optic Faceplate

ELECTRICAL

Cathode	Coated Unipotential
Heater:	
Voltage	6.3 Volts
Current	0.6 Ampere
Direct Interelectrode Capacitances:	
Grid 1 to All Other Electrodes	9 pf
Grid 2 to All Other Electrodes	7 pf
Cathode to All Other Electrodes	7 pf
Focusing Method	Electrostatic
Deflection	42° Magnetic

OPTICAL

Screen Phosphor	Note 1
Faceplate:	
Configuration	Cylindrical
Glass	5-Micron Fiber Optic
Transmission	.65%
Numerical Aperture	0.84

MECHANICAL

Mounting Position	Any
Screen Quality Area	1/4" x 4 1/4" Min.
Bulb Diameter	5 1/4" ± 1/8"
Overall Length (Excluding Leads)	16 3/16" ± 1/2"
Anode Terminal	AMP No. 833807
Net Weight	3 Pounds

Δ The WX- number identifies a specific laboratory design; the design and, consequently, the data and type number are subject to change. No obligations are assumed to manufacture this particular device in the future unless otherwise arranged. These drawings and specifications are the property of Westinghouse Electric Corporation, Electronic Tube Division, and shall not be reproduced or copied or used as the basis for the manufacture or sale of apparatus and/or devices without permission.

Westinghouse

DEVELOPMENTAL DEVICE
Tentative Data

MAXIMUM RATINGS
Absolute Maximum Values

Anode Voltage (Note 2)	18000 max. Volts
Grid 3 (Focus) Voltage (Note 3)	5000 max. Volts
Grid 2 Voltage	600 max. Volts
Grid 1 Voltage:	
Negative Bias Value	180 max. Volts
Positive Bias Value	0 max. Volts
Positive Peak Value	0 max. Volts
Peak Heater-Cathode Voltage:	
Heater Negative with respect to Cathode:	
During warm-up period of 15 sec. max.	410 max. Volts
After Equipment warm-up period	180 max. Volts
Heater Positive with respect to Cathode	180 max. Volts

LIMITING CIRCUIT VALUES

Grid 1 Circuit Resistance	1.5 max. Meghoms
Grid 2 Circuit Resistance	See Note 4

TYPICAL CIRCUIT VALUES

Anode Voltage (Note 2)	15000 Volts
Grid 3 (Focus) Voltage (Note 3)	3800 to 4200 Volts
Grid 2 Voltage	500 Volts
Grid 1 Spot Cutoff Voltage	-40 to -80 Volts
Line Width with P11 (Note 5)	0.0007 Inch
Spot Position (Note 6)	5 mm

NOTES

1. Westinghouse Military & Industrial Cathode Ray Tubes can be supplied with most of the standard JEDEC phosphors.
2. Operation with voltage in excess of 16KV may require shielding to limit radiation of very soft X-rays.
3. The grid 3 electrode may draw a peak current of 2 milliamperes with a representative value of 300 microamperes under normal operation. Regulation of grid 3 voltage should be held to 0.1% and ripple limited to 5 volts peak-to-peak.
4. A grid 2 circuit resistance of approximately 0.5 megohm should be provided. In addition, it is recommended that a suitable device be used to limit grid 2 voltage to the rated value to prevent tube damage in case of a momentary arc.
5. Line width is defined as the distance between the half-amplitude points of the light-energy distribution of the line and is measured with a peak current of 3 microamperes, using the slit-scan technique described in (W) reprint #5510. Line width with other phosphors may vary slightly.
6. With the tube shielded against external magnetic fields, the undeflected focused spot lies within a circle of 5 mm radius concentric with the faceplate.

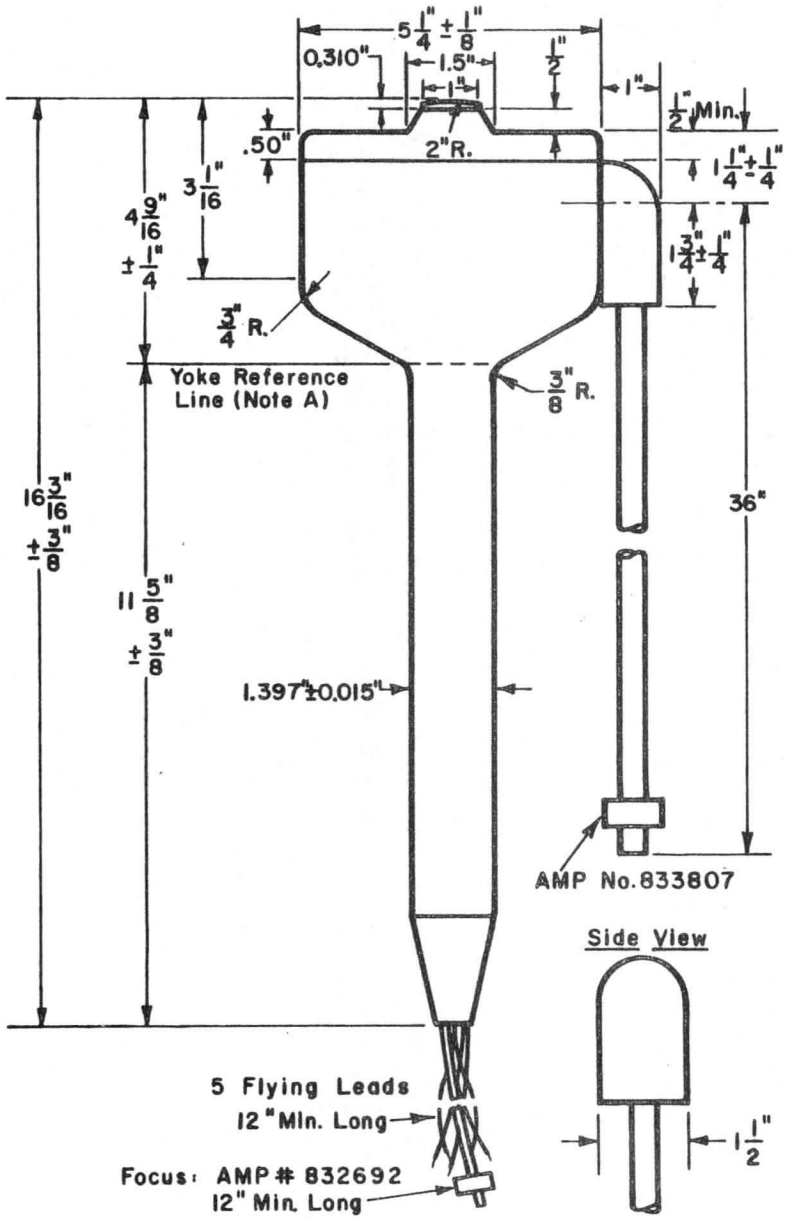

CONNECTIONS

Axial Lead Group

Filament. . . . . .Brown
Cathode. . . . . Violet
Grid 1. . . . . .Green
Grid 2. . . . . .Blue
Grid 3(Focus). .AMP832692
Bulb Lead
Anode. AMP833807

OUTLINE NOTE

A. The Yoke Reference Line is determined by JEDEC Reference Line Gage No. 112.

RUGGEDIZED TUBE-YOKE-SHIELD ASSEMBLY TYPE WX-5328P11

Basic Characteristics	Typical Applications	Special Features
40° Magnetic Deflection	Aerial Photographic Recording	Spot Diameter 0.000675"
Electrostatic Focus	Single-Line-Scan Display	Reduced Deflection Defocusing
3" Flat Faceplate		

ELECTRICAL

Cathode	Coated Unipotential
Heater:	
Voltage	6.3 Volts
Current	0.6 Ampere
Direct Interelectrode Capacitances:	
Grid 1 to all other Electrodes	24 pf
Cathode to all other Electrodes	17 pf
Focusing Method	Electrostatic
Deflection	40° Magnetic
Yoke Characteristics:	
Vertical Inductance	10 ± 10% mH
Vertical Resistance	12 ± 10% Ohms
Horizontal Inductance	75 ± 10% μH
Horizontal Resistance	0.27 ± 10% Ohms

OPTICAL

Screen Phosphor (Note 1)	P11
Faceplate:	
Configuration (Note 2)	Flat
Glass	Clear
Transmission	90%
Index of Refraction	1.506

MECHANICAL

Mounting Position	Any
Net Weight	11 1/4 Pounds

ENVIRONMENTAL CAPABILITY

The WX-5328P11 will withstand, without damage, vibration at 20 G from 55 to 500 cps and will operate without degradation of performance while subjected to vibration at 0.23" double amplitude up to 25 cps and at 5 G from 25 to 500 cps.

Δ The WX- number identifies a specific laboratory design; the design and, consequently, the data and type number are subject to change. No obligations are assumed to manufacture this particular device in the future unless otherwise arranged. These drawings and specifications are the property of Westinghouse Electric Corporation, Electronic Tube Division, and shall not be reproduced or copied or used as the basis for the manufacture or sale of apparatus and/or devices without permission.

Westinghouse

DEVELOPMENTAL DEVICE
Tentative Data

ABSOLUTE MAXIMUM RATINGS

Anode Voltage	12500 max. Volts
Grid 3 (Focus) Voltage (Note 3)	5000 max. Volts
Grid 2 Voltage	600 max. Volts
Grid 1 Voltage:	
Negative Bias Value	180 max. Volts
Positive Bias Value	0 max. Volts
Positive Peak Value	0 max. Volts
Peak Heater-Cathode Voltage:	
Heater Negative with respect to Cathode:	
During warm-up period of 15 sec. max.	410 max. Volts
After Equipment warm-up period	180 max. Volts
Heater Positive with respect to Cathode	180 max. Volts

LIMITING CIRCUIT VALUES

Grid 1 Circuit Resistance	1.5 max. Megohms
Grid 2 Circuit Resistance	See Note 4

TYPICAL OPERATING CONDITIONS

Anode Voltage	10000 Volts
Grid 3 (Focus) Voltage (Note 3)	1900 to 2300 Volts
Grid 2 Voltage	300 Volts
Grid 1 Spot Cutoff Voltage	-40 to -70 Volts
Spot Diameter for P11 (Note 5):	
Center	0.000675 Inch
Edge	0.0008 Inch
Deflection Sensitivity:	
Vertical	0.2 Amperes/Inch
Horizontal	2.25 Amperes/Inch

NOTES

1. Westinghouse Military & Industrial Cathode Ray Tubes can be supplied with most of the standard JEDEC phosphors.

2. Maximum deviation from flatness is 0.001" within a circle of 2" diameter centered on the tube axis. Faceplate tilt relative to the tube axis is 0.3° maximum.

3. The grid 3 electrode may draw a peak current of 2 milliamperes with a representative value of 300 microamperes under normal operation.

4. A grid 2 circuit resistance of approximately 0.5 megohm should be provided. In addition it is recommended that a suitable device be used to limit grid 2 voltage to the maximum rated value to prevent tube damage in case of a momentary arc.

5. Spot diameter is defined as the distance between the half-amplitude points of the light-energy distribution of the spot and is measured with a peak current of 1 microampere, using the slit-scan technique described in (P) reprint #5510. Spot diameter with other phosphors may vary slightly. Dynamic focus modulation is necessary to maintain optimum resolution over entire face. Close control of supply regulation and ripple is necessary to ensure optimum focus. Typically, a 0.1% change in focus or anode voltage, from best value, will increase spot size approximately 10%.

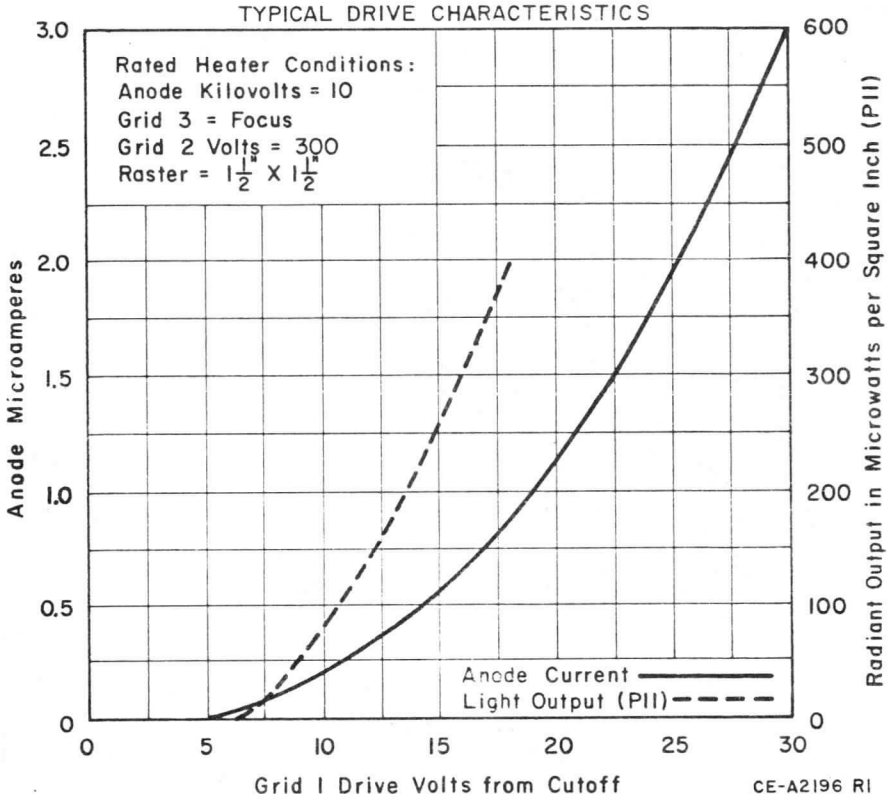

Westinghouse

DEVELOPMENTAL DEVICE
Tentative Data

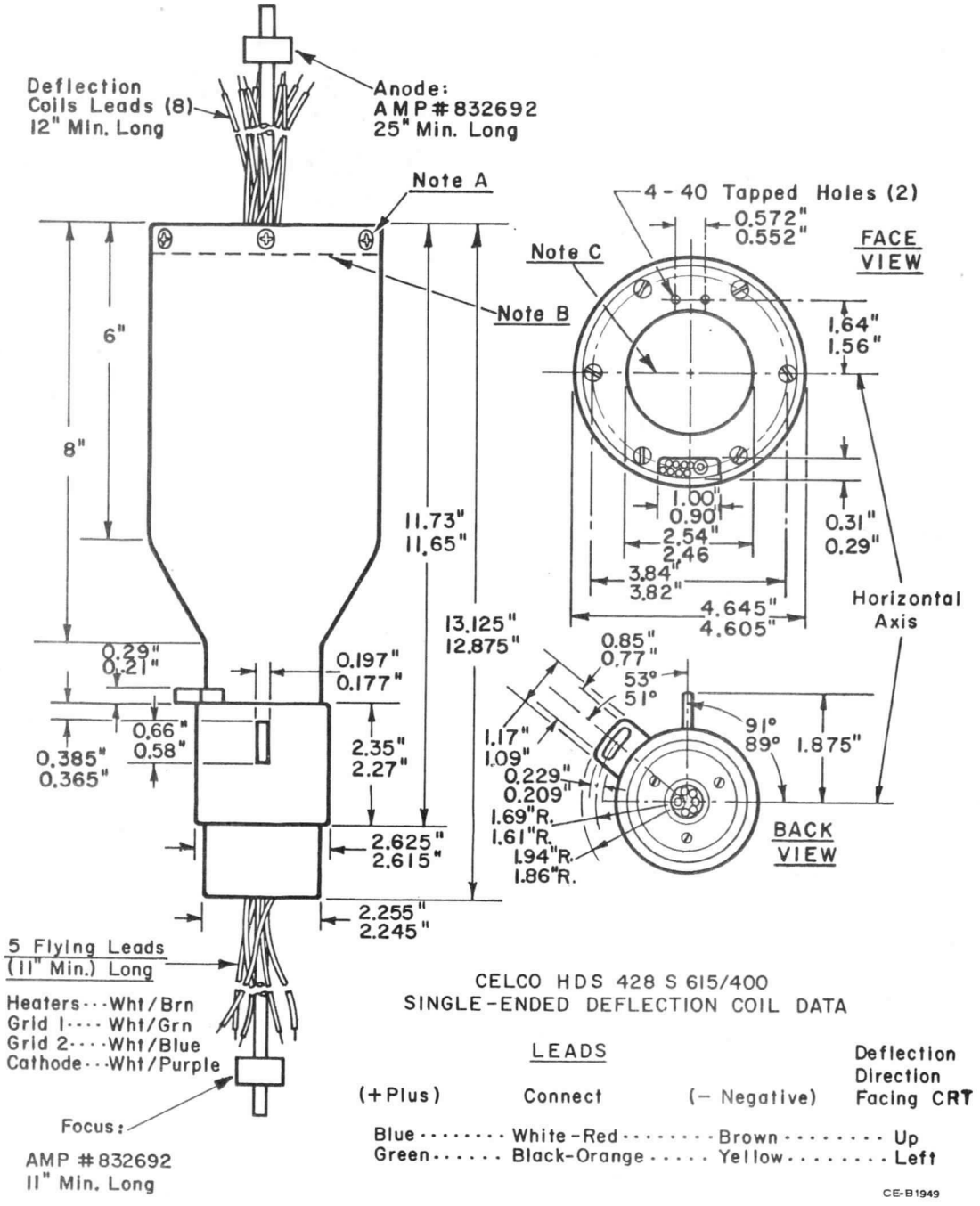

CELCO HDS 428 S 615/400
SINGLE-ENDED DEFLECTION COIL DATA

LEADS (+Plus)	Connect	LEADS (− Negative)	Deflection Direction Facing CRT
Blue	White-Red	Brown	Up
Green	Black-Orange	Yellow	Left

CE-B1949

A. Mounting screws are recessed below periphery.
B. Front surface of faceplate is 0.445" minimum, 0.465" maximum from front of tube housing.
C. Horizontal trace alinement with plane defined by the key and the tube axis is 90° ± 5°.

Westinghouse

DEVELOPMENTAL DEVICE
Tentative Data

WX- 5342P-

March 27, 1963

5" TUBE TYPE WX-5342P-
HIGH RESOLUTION DISPLAY TUBE

Basic Characteristics	Typical Applications	Special Features
5" Flat Face Round Glass Bulb Electrostatic Focus 42° Magnetic Deflection Aluminized Screen	Photographic Recording and Flying Spot Scanning	0.0012" Spot Size Similar to Type 5CEP- but longer Neck to Accommodate Added De- flection Components

ELECTRICAL

Cathode	Coated Unipotential
Heater:	
Voltage (ac or dc)	6.3 Volts
Current	0.6 ± 10% Ampere
Direct Interelectrode Capacitances:	
Grid 1 to All Other Electrodes	9 pf
Grid 2 to All Other Electrodes	7 pf
Cathode to All Other Electrodes	7 pf
Focusing Method	Electrostatic
Deflection:	
Method	Magnetic
Angle (Approx.)	42°

MECHANICAL

Mounting Position	Any
Screen:	
Type	Note 1
Diameter	4 1/4" Min.
Faceplate:	
Configuration (Note 2)	Flat
Glass	Neutral Gray
Transmission (Approx.)	75%
Index of Refraction	1.520
Bulb Dimensions:	
Diameter	5 1/4" ± 1/16"
Overall Length	15" ± 1/2"
Anode Terminal	AMP NO. 833779
Base	Small Shell Duodecal 6-Pin (JEDEC B6-63)

Δ The WX- number identifies a specific laboratory design; the design and, consequently, the data and type number are subject to change. No obligations are assumed to manufacture this particular device in the future unless otherwise arranged. These drawings and specifications are the property of Westinghouse Electric Corporation, Electronic Tube Division, and shall not be reproduced or copied or used as the basis for the manufacture or sale of apparatus and/or devices without permission.

WESTINGHOUSE ELECTRIC CORPORATION, ELECTRONIC TUBE DIVISION, ELMIRA, NEW YORK

ET-1052 PRINTED IN U.S.A.

MAXIMUM RATINGS

Absolute Maximum Values

Anode Voltage (Note 3)	24000 max. Volts
Grid 3 (Focus) Voltage	8000 max. Volts
Grid 2 Volts	600 max. Volts
Grid 1 Volts:	
Negative Bias Value	180 max. Volts
Positive Bias Value	0 max. Volts
Positive Peak Value	0 max. Volts
Peak Heater-Cathode Voltage:	
Heater Negative with respect to Cathode:	
During warm-up period of 15 seconds max.	410 max. Volts
After Equipment warm-up period	180 max. Volts
Heater Positive with respect to Cathode	180 max. Volts

LIMITING CIRCUIT VALUE

Grid 1 Circuit Resistance	1.5 max. Megohms

TYPICAL OPERATING CONDITIONS

Anode Voltage (Note 3)	10000	20000 Volts
Grid 3 (Focus) Voltage	2600 to 2900	5200 to 5800 Volts
Grid 2 Voltage	300	300 Volts
Grid 1 Spot Cutoff	-40 to -70	-40 to -70 Volts
Line Width (Note 4,P11)		0.0012 Inch
Spot Position (Note 5)		5 mm

NOTES

1. Westinghouse Military and Industrial Cathode Ray Tubes can be supplied with most of the standard JEDEC phosphors.
2. The faceplate is a ground and polished flat plate 0.245" ± 0.005" thick with a maximum deviation from mean thickness for individual plates of 0.001". Maximum deviation from flatness is 0.006" within a circle of 4 1/4" diameter centered on the tube axis.
3. Operation with voltage in excess of 16 KV may require shielding to limit radiation of very soft X-rays.
4. Line width is defined as the distance between the half-amplitude points of the light-energy distribution of the line and is measured at a peak current of 10 microamperes using the slit-scan technique described in Westinghouse Reprint No. 5510. Line width may vary slightly with different phosphors.
5. With the tube shielded against external magnetic fields the spot lies within a circle of 5 millimeters radius concentric with the faceplate.

COMMERCIAL OUTLINE

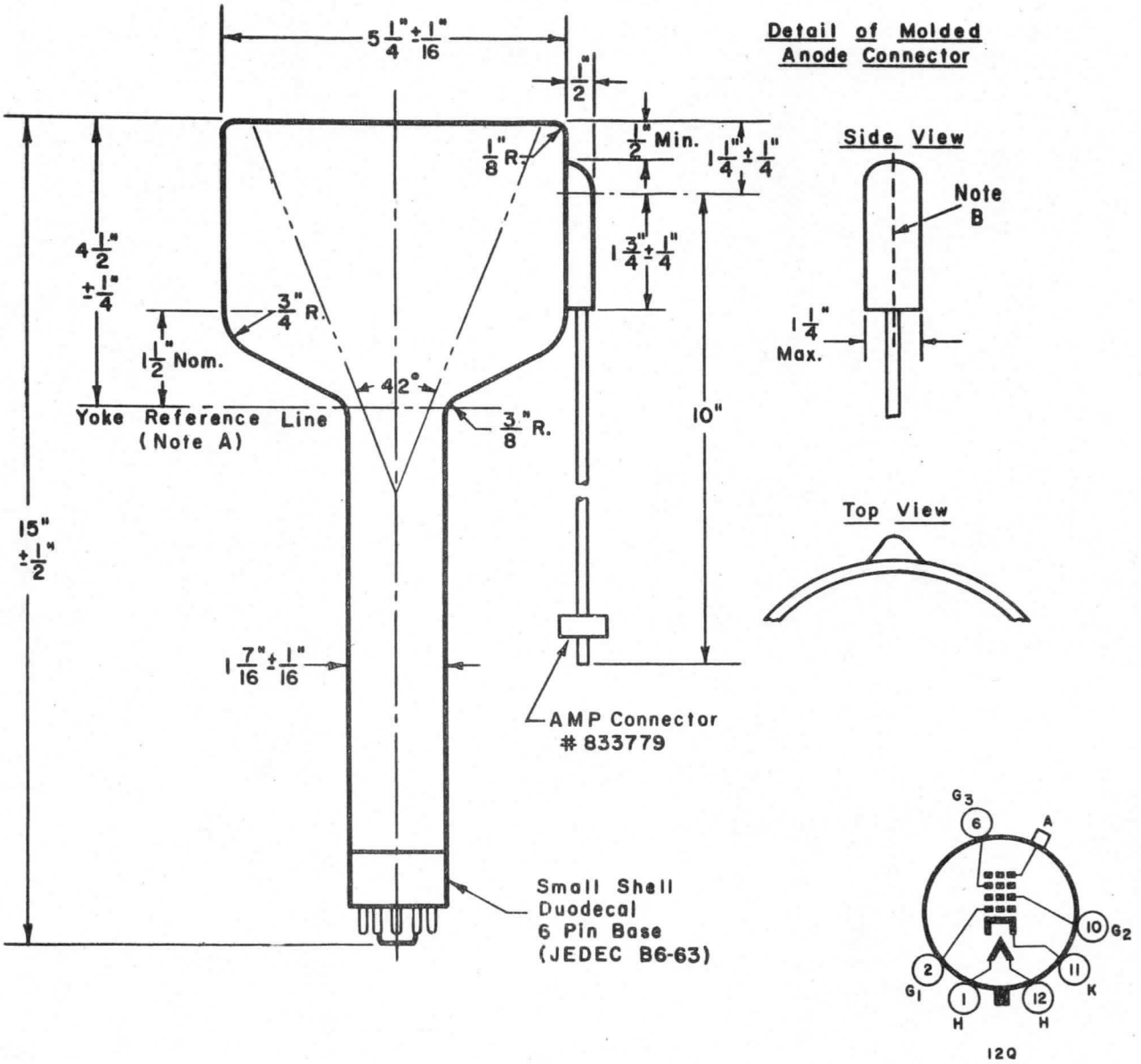

OUTLINE NOTES

A. The Yoke Reference Line is determined by JEDEC Reference Line Gage No. 112.

B. The plane defined by the tube axis and pin position 3 will be within 10° of the plane defined by the tube axis and the anode terminal.

10" MILITARY & INDUSTRIAL CATHODE RAY TUBE TYPE WX-5357P-

Basic Characteristics	Typical Applications	Special Features
10" Round Spherical Faceplate 50° Magnetic Deflection Electrostatic Focus Aluminized Screen	Radar Monitor	0.005" Line Width

ELECTRICAL

Cathode	Coated Unipotential
Heater:	
Voltage	6.3 Volts
Current	0.60 Ampere
Direct Interelectrode Capacitances:	
Grid 1 to all other Electrodes	9 pf
Grid 2 to all other Electrodes	7 pf
Cathode to all other Electrodes	7 pf
Focusing Method	Electrostatic
Deflection	50° Magnetic

OPTICAL

Screen Phosphor	Note 1
Faceplate:	
Configuration	Spherical
Glass	Neutral Gray
Transmission	70%

MECHANICAL

Mounting Position	Any
Net Weight	10 Pounds

ABSOLUTE MAXIMUM RATINGS

Anode Voltage (Note 2)	22000 max. Volts
Grid 3 (Focus) Voltage (Note 3)	5000 max. Volts
Grid 2 Voltage	600 max. Volts
Grid 1 Voltage:	
Negative Bias Value	180 max. Volts
Positive Bias Value	0 max. Volts
Positive Peak Value	0 max. Volts
Peak Heater-Cathode Voltage:	
Heater Negative with respect to Cathode:	
During warm-up period of 15 sec. max.	410 max. Volts
After Equipment warm-up period	180 max. Volts
Heater Positive with respect to Cathode	180 max. Volts

Δ The WX- number identifies a specific laboratory design; the design and, consequently, the data and type number are subject to change. No obligations are assumed to manufacture this particular device in the future unless otherwise arranged. These drawings and specifications are the property of Westinghouse Electric Corporation, Electronic Tube Division, and shall not be reproduced or copied or used as the basis for the manufacture or sale of apparatus and/or devices without permission.

Westinghouse

DEVELOPMENTAL DEVICE
Tentative Data

LIMITING CIRCUIT VALUES

Grid 1 Circuit Resistance	1.5 max. Megohms
Grid 2 Circuit Resistance	See Note 4
Focus Electrode Circuit Resistance	10000 min. Ohms

TYPICAL OPERATING CONDITIONS

Anode Voltage (Note 2)	10000 Volts
Grid 3 (Focus) Voltage (Note 3)	1500 to 1800 Volts
Grid 2 Voltage	300 Volts
Grid 1 Spot Cutoff Voltage	-40 to -65 Volts
Line Width for P28 (Note 5)	0.005 Inch
Spot Position (Note 6)	10 mm

NOTES

1. Westinghouse Military & Industrial Cathode Ray Tubes can be supplied with most of the standard JEDEC phosphors.

2. Operation with voltage in excess of 16 KV may require shielding to limit radiation of very soft X-rays.

3. The grid 3 electrode may draw a peak current of 2 milliamperes with a representative value of 300 microamperes under normal operation.

4. A grid 2 circuit resistance of approximately 0.5 megohm should be provided.

5. Line width is measured by the shrinking raster method.

6. With the tube shielded against external magnetic fields, the undeflected focused spot lies within a circle of 10 mm radius concentric with the faceplate.

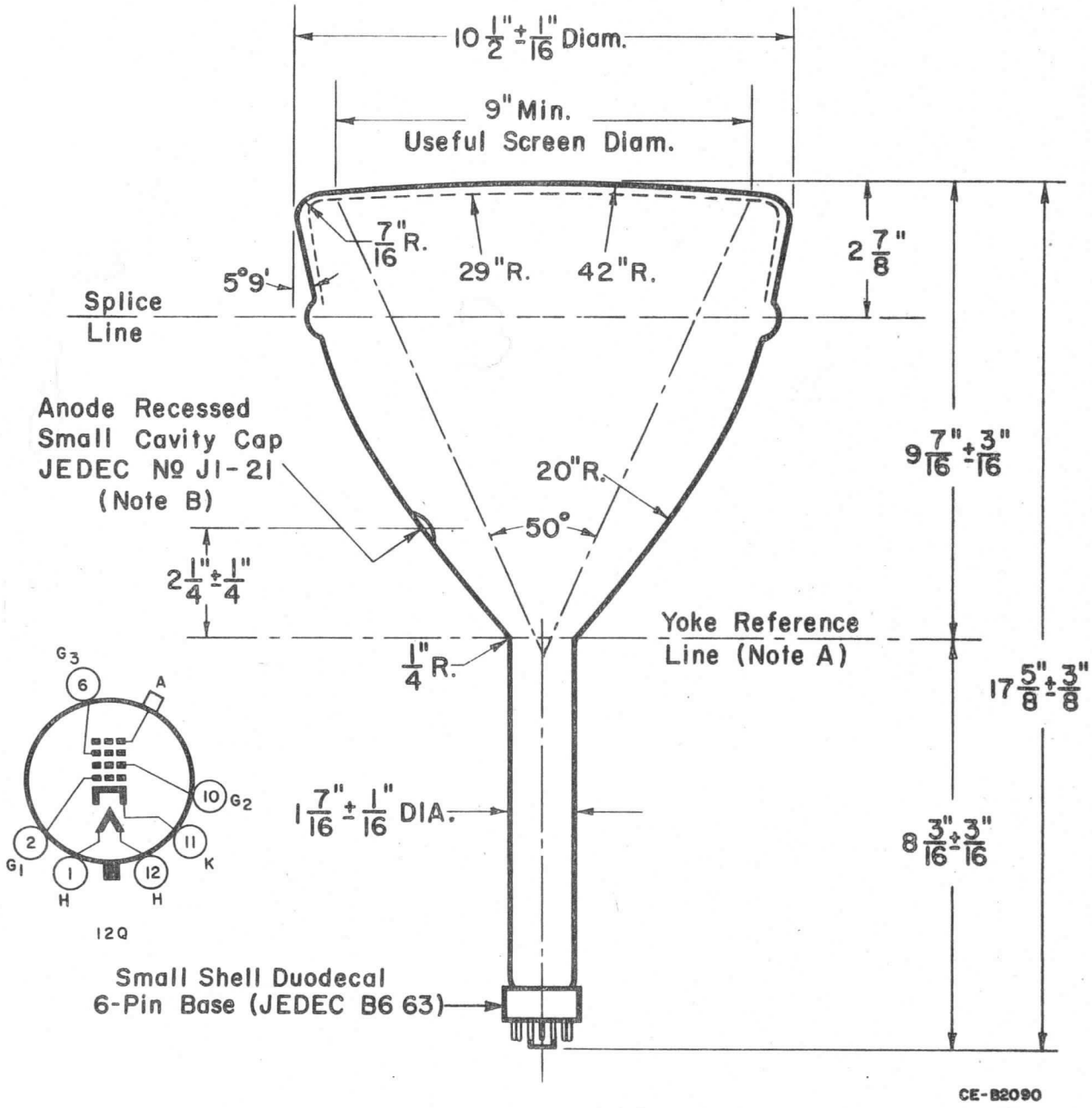

OUTLINE NOTES

A. The Yoke Reference Line is determined by JEDEC Reference Line Gage No. 112.

B. The plane defined by the tube axis and pin position 3 will be within 10° of the plane defined by the tube axis and the anode.

3" MILITARY & INDUSTRIAL CATHODE RAY TUBE TYPE WX-30020P-

Basic Characteristics	Typical Applications	Special Features
3" Round Flat Face Low Voltage ES Focus 70° Magnetic Deflection Aluminized	Radar Display	0.004" Line Width Compact Lightweight 7/8" Neck Diameter

ELECTRICAL

Cathode	Coated Unipotential
Heater:	
Voltage	12.6 Volts
Current	0.15 Ampere
Direct Interelectrode Capacitances:	
Grid 1 to all other Electrodes	9 pf
Grid 2 to all other Electrodes	7 pf
Cathode to all other Electrodes	7 pf
Focusing Method	Low Voltage Electrostatic
Deflection	70° Magnetic

OPTICAL

Screen Phosphor	Note 1
Faceplate:	
Configuration	Flat
Glass	Clear
Transmission	90%
Index of Refraction	1.506

MECHANICAL

Mounting Position	Any
Net Weight (Approx.)	5 Ounces

Δ The WX- number identifies a specific laboratory design; the design and, consequently, the data and type number are subject to change. No obligations are assumed to manufacture this particular device in the future unless otherwise arranged. These drawings and specifications are the property of Westinghouse Electric Corporation, Electronic Tube Division, and shall not be reproduced or copied or used as the basis for the manufacture or sale of apparatus and/or devices without permission.

ABSOLUTE MAXIMUM RATINGS

Anode Voltage	12000 max. Volts
Grid 4 (Focus) Voltage	1000 max. Volts
Grid 2 Voltage	600 max. Volts
Grid 1 Voltage:	
Negative Bias Value	180 max. Volts
Positive Bias Value	0 max. Volts
Positive Peak Value	0 max. Volts
Peak Heater-Cathode Voltage:	
Heater Negative with respect to Cathode:	
During warm-up period of 15 sec. max.	410 max. Volts
After Equipment warm-up period	180 max. Volts
Heater Positive with respect to Cathode	180 max. Volts

LIMITING CIRCUIT VALUES

Grid 1 Circuit Resistance	1.5 max. Megohms
Grid 2 Circuit Resistance (Approx.)	0.5 Megohm
Focus Electrode Circuit Resistance	10000 min. Ohms

TYPICAL OPERATING CONDITIONS

Anode Voltage	10000 Volts
Grid 4 (Focus) Voltage	0 to 300 Volts
Grid 2 Voltage	300 Volts
Grid 1 Spot Cutoff Voltage	-25 to -60 Volts
Line Width for P4 (Note 2)	0.004 Inch
Spot Position (Note 3)	5 mm

NOTES

1. Westinghouse Military & Industrial Cathode Ray Tubes can be supplied with most of the standard JEDEC phosphors.
2. Line width is defined as the distance between the half-amplitude points of the light-energy distribution of the line and is measured with a peak current of 50 microamperes, using the slit-scan technique described in Ⓦ reprint #5510. Line width with other phosphors may vary slightly.
3. With the tube shielded against external magnetic fields, the undeflected focused spot lies within a circle of 5 mm radius concentric with the faceplate.

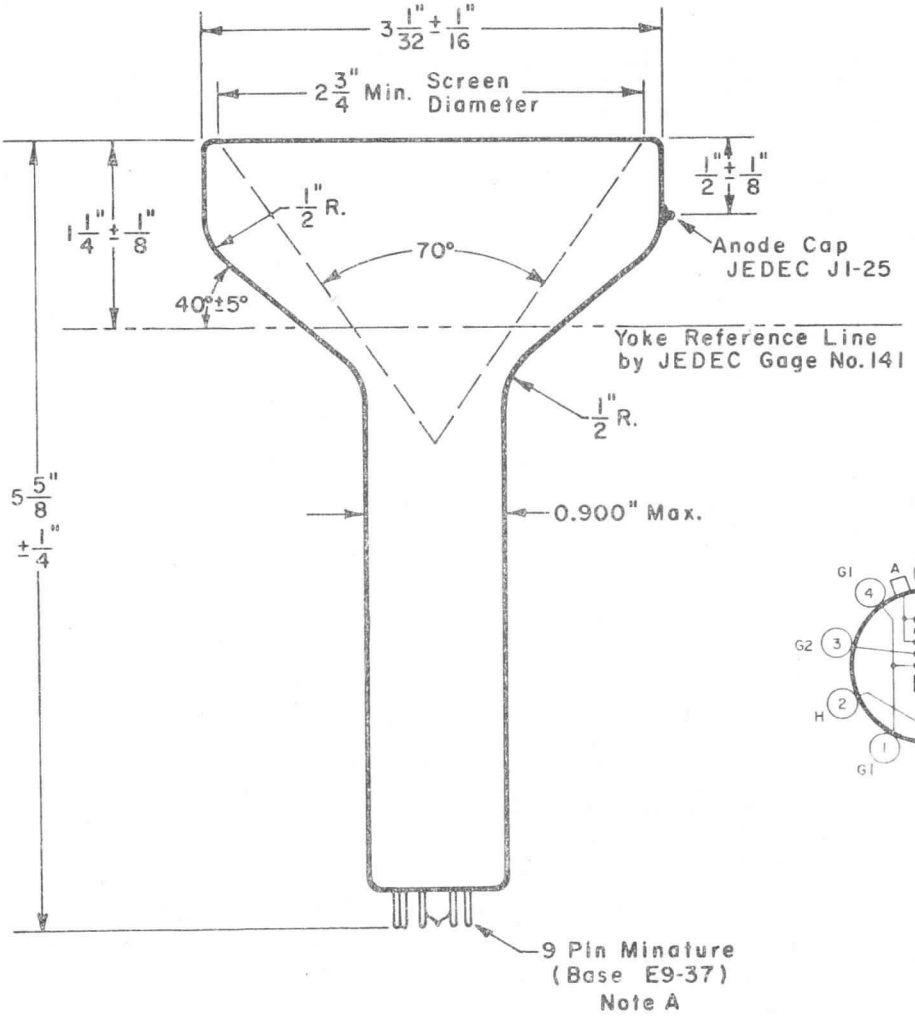

OUTLINE NOTES

A. A socket with a center opening to clear the tubulation should be used. Care should be taken to avoid damage to the tubulation.

B. The plane defined by the tube axis and pin position 10 will be within 10° of the plane defined by the tube axis and the anode.

Westinghouse

DEVELOPMENTAL DEVICE
Tentative Data

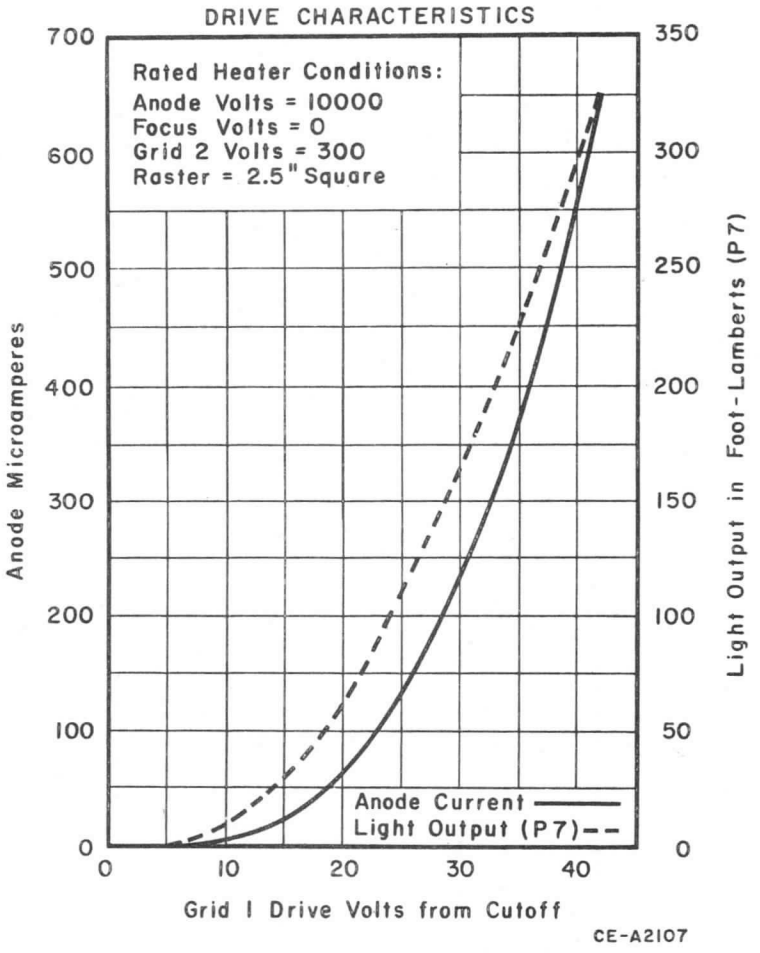

Industrial & Military CRT

Type: WX-30027P-★

7″ (178mm) Round Flat Faceplate
Low Voltage Focus, Magnetic Deflection
Rear Window
Line Width = 0.010″ (0.25mm)

Westinghouse

Basic Characteristics
7″ (178mm) Round Flat Faceplate
17° Max. Half Angle Magnetic Deflection
Low Voltage Focus
Non Aluminized

Typical Applications
Simultaneous Radar Readout
and
Photographic Recording

Special Features
Line Width = 0.010″ (0.25mm)
Optically Flat Rear Window
Integral Magnetic Shield

Electrical

Cathode	Coated Unipotential
Heater:	
Voltage	6.3 Volts
Current	0.6 Ampere
Direct Interelectrode Capacitances:	
Grid 1 to All Other Electrodes	6 pF
Cathode to All Other Electrodes	5 pF
Focusing Method	Electrostatic
Deflection	17° Half Angle Magnetic

Optical

Screen Phosphor	Note 1
Faceplate:	
Configuration	Flat
Glass	Clear
Transmission	85%
Index of Refraction	1.507
Rear Window: (Note 2)	
Configuration	Flat
Glass	Optical
Transmission	87%
Index of Refraction	1.507
Thickness	0.250″ ±0.005″ 6.35mm ± 0.13 mm

Mechanical

Mounting Position	Any
Net Weight	8 Pounds 3.6 Kilograms

Absolute Maximum Ratings

Anode Voltage (Note 3)	22000 max. Volts
Grid 4 (Focus) Voltage	700 max. Volts
Grid 2 Voltage	600 max. Volts
Grid 1 Voltage:	
Negative Bias Value	180 max. Volts
Positive Bias Value	0 max. Volts
Positive Peak Value	0 max. Volts
Peak Heater-Cathode Voltage:	
Heater Negative with respect to Cathode:	
During Warm-up Period of 15 sec. max.	410 max. Volts
After Equipment Warm-up Period	180 max. Volts
Heater Positive with respect to Cathode:	
Peak	180 max. Volts
DC	25 max. Volts

Limiting Circuit Values

Grid 1 Circuit Resistance	1.5 max. Megohms
Grid 2 Circuit Resistance	See Note 4
Focus Electrode Circuit Resistance	10000 min. Ohms

Typical Operating Conditions & Performance

Anode Voltage (Note 3)	10000 Volts
Grid 4 (Focus) Voltage	0 to 200 Volts
Grid 2 Voltage	300 Volts
Grid 1 Spot Cutoff Voltage	−33 to −77 Volts
Line Width with P14 (Note 5)	0.010 Inch
	0.25 mm
Spot Position (Note 6)	8 mm

Notes

1. Westinghouse Military & Industrial Cathode Ray Tubes can be supplied with most of the standard JEDEC phosphors.
2. The rear window is optically flat to 2 rings in a 0.5″ (13mm) diameter circle measured with a standard IC surface using the Sodium "D" line. [10 rings is approximately 0.0001″ (0.003mm)]
3. Operation with voltage in excess of 16KV may require shielding to limit radiation of very soft X-rays.
4. A grid 2 circuit resistance of approximately 0.5 megohm should be provided. In addition it is recommended that a suitable device be used to limit grid 2 voltage to the maximum rated value to prevent tube damage in case of a momentary arc.
5. Line width is measured by the shrinking raster method with current adjusted to give a 5″ (127mm) high x 5.6″ (142mm) wide raster a brightness of 20 footlamberts using interlaced TV scan.
6. With the tube shielded against external magnetic fields, the undeflected focused spot lies within a circle of 10 mm radius concentric with the neck.

★ The WX-number identifies a specific laboratory design; the design and, consequently, the data and type number are subject to change. No obligations are assumed to manufacture this particular device in the future unless otherwise arranged. These drawings and specifications are the property of Westinghouse Electric Corporation, Electronic Tube Division, and shall not be reproduced or copied or used as the basis for the manufacture or sale of apparatus and/or devices without permission.

September 1970
Supersedes WX-30027 dated July 30, 1964
TC−2236-2

Industrial & Military CRT

Type: WX-30027P-

7" (178mm) Round Flat Faceplate
Low Voltage Focus, Magnetic Deflection
Rear Window
Line Width = 0.010" (0.25mm)

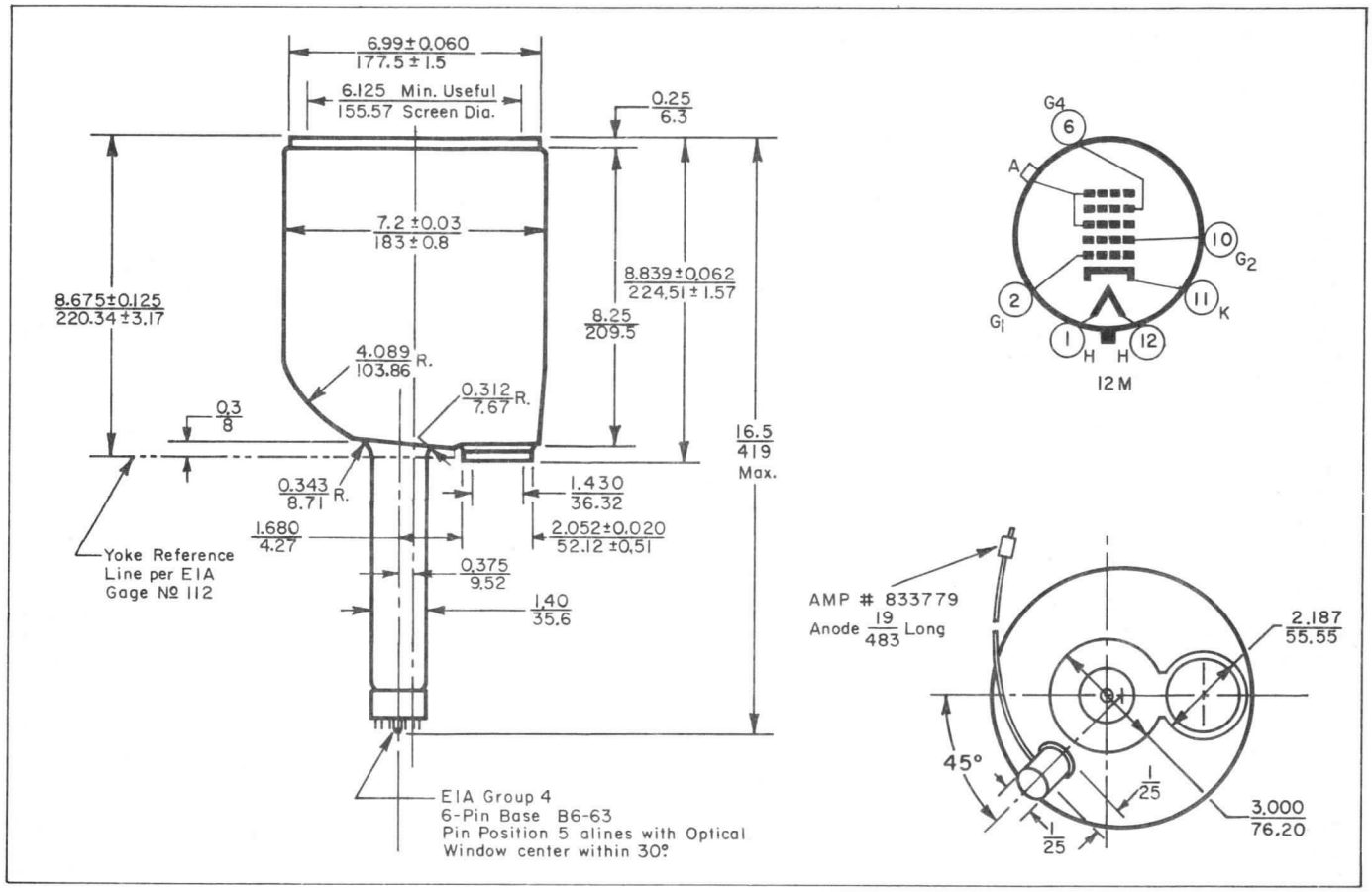

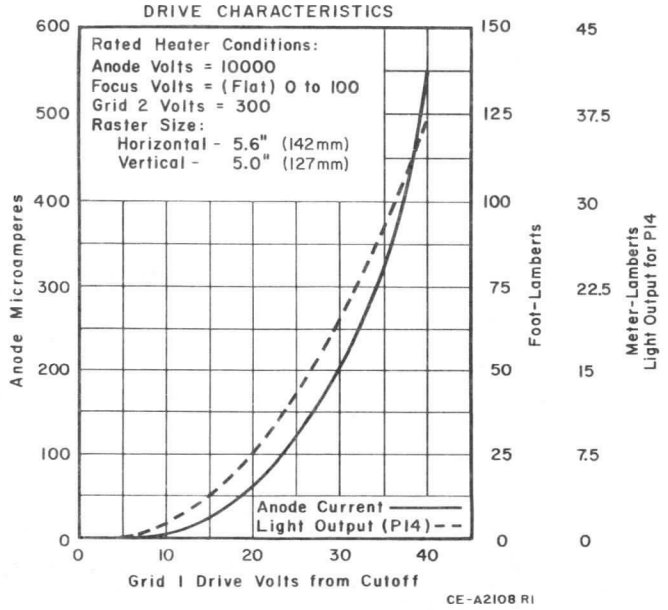

Westinghouse Electric Corporation
Electronic Tube Division, Elmira, N. Y. 14902
Printed in U.S.A.

Westinghouse

Industrial & Military CRT Ruggedized Tube - Yoke - Shield Assembly

Type: WX-30099P- ★

Magnetic Deflection, ES Focus
Line Width = 0.0007" (0.018mm)
Fiber-Optic Faceplate
0.25" x 4.25" (6.3mm x 107.9mm)
Useful Screen Area

Basic Characteristics
40° Magnetic Deflection
Electrostatic Focus
Grounded Anode Operation

Typical Applications
Aerial Photographic Recording
Single Line Scan Display

Special Features
0.0007" (0.018mm) Line Width
Reduced Deflection Defocusing
Raised Cylindrical High-Quality Fiber-Optic Faceplate

Electrical

Cathode	Coated Unipotential
Heater:	
Voltage	6.3 Volts
Current	0.45 Ampere
Direct Interelectrode Capacitances:	
Grid 1 to All Other Electrodes	30 pF
Cathode to All Other Electrodes	20 pF
Focusing Method	Electrostatic
Deflection	40° Magnetic
Yoke Chatacteristics: Single-End Operation	
Vertical Inductance	11 ± 10% mH
Vertical Resistance	11 ± 10% Ohms
Horizontal Inductance	117 ± 10% μH
Horizontal Resistance	0.3 ± 10% Ohms

Optical

Screen Phosphor	Note 1
Minimum Useful Screen Area	0.25" x 4.25" (6.3mm x 107.9mm)
Fiber-Optic Faceplate:	
Configuration	Cylindrical
Radius of Curvature	2 Inch (51mm)
Fiber Diameter	5 Microns
Numerical Aperture	0.86 Dark Clad

Mechanical

Mounting Position	Any
Net Weight (maximum)	23 Pounds 10.4 Kilograms

★ The WX-number identifies a specific laboratory design; the design and, consequently, the data and type number are subject to change. No obligations are assumed to manufacture this particular device in the future unless otherwise arranged. These drawings and specifications are the property of Westinghouse Electric Corporation, Electronic Tube Division, and shall not be reproduced or copied or used as the basis for the manufacture or sale of apparatus and/or devices without permission.

Absolute Maximum Ratings

Grounded Anode Operation (Note 2)
Voltages Referenced to Cathode

Anode Voltage (Note 3)	18000 max. Volts
Grid 3 (Focus) Voltage (Note 4)	6000 max. Volts
Grid 2 Voltage	600 max. Volts
Grid 1 Voltage:	
Negative Bias Value	180 max. Volts
Positive Bias Value	0 max. Volts
Positive Peak Value	0 max. Volts
Heater-Cathode Voltage:	
Heater Negative with respect to Cathode:	
During Warm-up Period of 15 sec. max.	410 max. Volts
After Equipment Warm-up Period	180 max. Volts
Heater Positive with respect to Cathode:	
Peak	180 max. Volts
DC	25 max. Volts

Limiting Circuit Values

Grid 1 Circuit Resistance	1.5 max. Megohms
Grid 2 Circuit Resistance	See Note 5

Typical Operating Conditions

Voltages Referenced to Cathode

Anode Voltage (Note 3)	15000 Volts
Grid 3 (Focus) Voltage (Note 4)	4400 ± 10% Volts
Grid 2 Voltage	500 Volts
Grid 1 Spot Cutoff Voltage	−35 to −80 Volts
Maximum Line Width for P 11: (Note 6)	
Center	0.0007 Inch (0.018mm)
Edge	0.0008 Inch (0.020mm)
Deflection Current:	
Vertical (For 0.10" (2.5mm) Radial Deflection)	0.012 Amperes
Horizontal (For 2" (50mm) Radial Deflection)	2.3 Amperes
Spot Position (Note 7)	3 mm

Notes

1. Westinghouse Industrial & Military Cathode Ray Tubes can be supplied with most of the standard JEDEC phosphors.
2. The WX-30099P- must always be operated with the anode grounded. The voltages listed are referenced to the cathode potential for convenience.
3. Operation with voltage in excess of 16KV may require shielding to limit radiation of very soft X-rays.
4. The grid 3 electrode may draw a peak current of 2 milliamperes with a representative value of 300 microamperes under normal operation.
5. A grid 2 circuit resistance of approximately 0.5 megohms should be provided. In addition it is recommended that a suitable device be used to limit grid 2 voltage to the maximum rated value to prevent tube damage in case of a momentary arc.
6. Line width is defined as the distance between the half-amplitude points of the light-energy distribution of the line and is measured with a peak current of 0.5 microampere, using the slit-scan technique described in Westinghouse Pub. No. 86-704, (Reprint 5510). Line width with other phosphors may vary slightly. Dynamic focus modulation is necessary to maintain optimum resolution over entire face. Close control of supply regulation and ripple is necessary to ensure optimum focus. Typically, 1 0.1% change in focus or anode voltage, from best value, will increase spot size approximately 10%.
7. The undeflected focused spot lies within a circle of 3mm radius concentric with the shield.

Environmental Capability

The WX-30099P- ruggedized package will meet the vibration requirements of Mil-T-5422E Part II and the shock requirements of Mil-T-5422E Par. 4. 3. 2. 1.

February 1971
Supersedes WX-30099P- dated March 5, 1965
TC−2236-2

Industrial & Military CRT Ruggedized Tube - Yoke - Shield Assembly

Type: WX-30099P-

Magnetic Deflection, ES Focus
Line Width = 0.0007" (0.018mm)
Fiber-Optic Faceplate
0.25" x 4.25" (6.3mm x 107.9mm)
Useful Screen Area

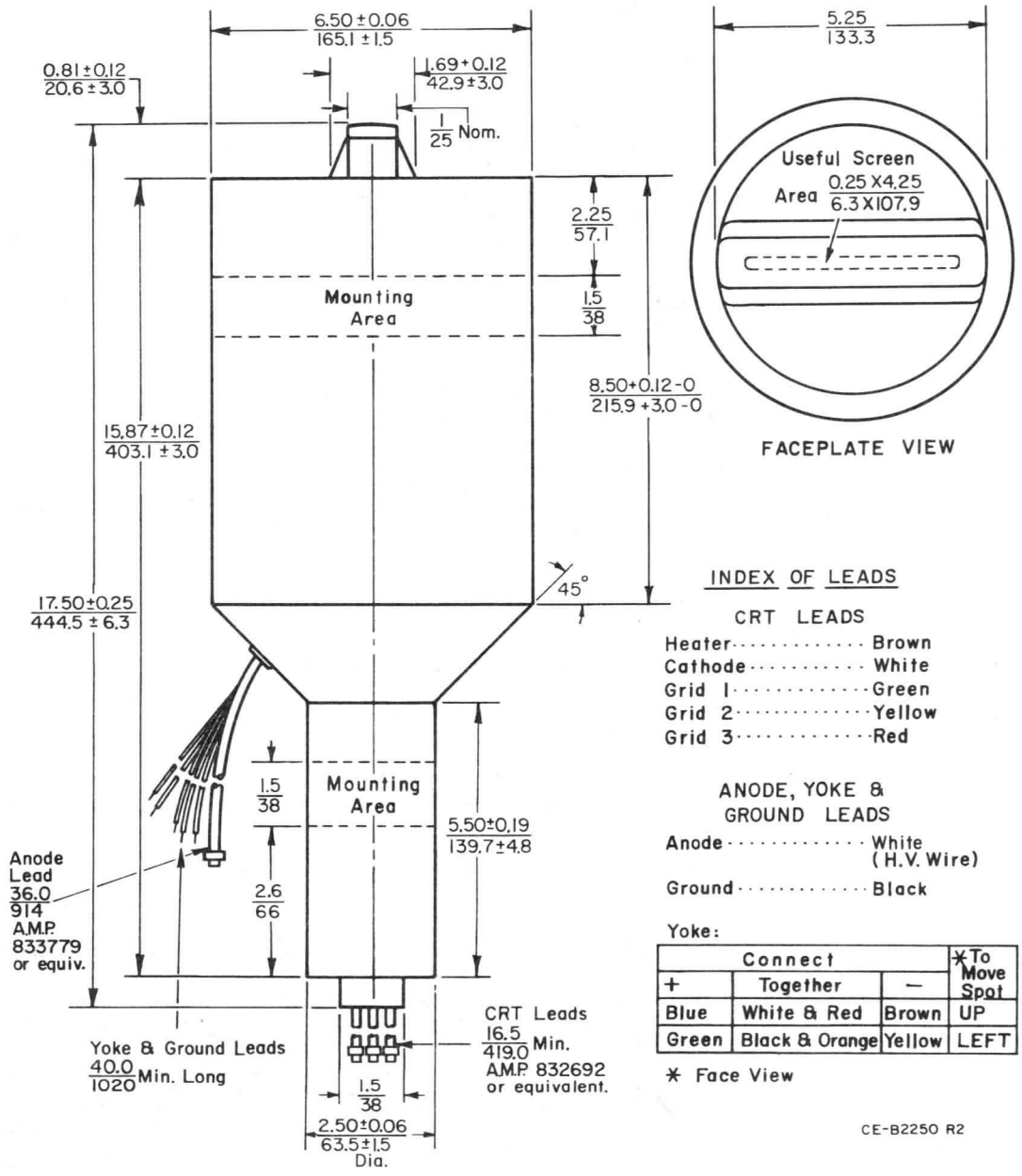

INDEX OF LEADS

CRT LEADS

Heater	Brown
Cathode	White
Grid 1	Green
Grid 2	Yellow
Grid 3	Red

ANODE, YOKE & GROUND LEADS

Anode	White (H.V. Wire)
Ground	Black

Yoke:

Connect			*To Move Spot
+	Together	−	
Blue	White & Red	Brown	UP
Green	Black & Orange	Yellow	LEFT

* Face View

CE-B2250 R2

(Dimensions in inches / mm unless otherwise shown) The millimeter dimensions are derived from the original inch dimensions, 1" = 25.4 mm exactly.

Westinghouse Electric Corporation
Electronic Tube Division, Elmira, N. Y. 14902
Printed in U. S. A.

12" Military & Industrial Cathode Ray Tube

Basic Characteristics	Typical Applications	Special Features
12" Round Flat Faceplate	Symbol Presentation	Double Rear Window
Electrostatic Focus	Rear Window Viewing & Photographic Recording	Double Axis Auxili Deflection
36° Magnetic Deflection	Rear Window Image Projection	0.010" Line Width

ELECTRICAL

Cathode	Coated Unipotential
Heater:	
Voltage	6.3 Volts
Current	0.6 Ampere
Direct Interelectrode Capacitances:	
Grid 1 to all other Electrodes	10 pF
Grid 2 to all other Electrodes	8 pF
Cathode to all other Electrodes	6 pF
D1 to D2	1 pF
D3 to D4	1 pF
D1 to all other Electrodes	3.5 pF
D2 to all other Electrodes	3.5 pF
D3 to all other Electrodes	3.3 pF
D4 to all other Electrodes	3.7 pF
Focusing Method	Electrostatic
Deflection	36° Magnetic
Auxiliary Deflection	Electrostatic

OPTICAL

Screen Phosphor	Note 1
Faceplate:	
Configuration	Flat
Glass	Clear Non-Browning
Transmission	90%
Index of Refraction	1.52
Rear Windows:	
Configuration	Flat
Glass	Clear Opthalmic Quality
Transmission	90%
Index of Refraction	1.60

MECHANICAL

Mounting Position	Any
Net Weight (Approx.)	30 lb.

Δ The WX- number identifies a specific laboratory design; the design and, consequently, the data and type number are subject to change. No obligations are assumed to manufacture this particular device in the future unless otherwise arranged. These drawings and specifications are the property of Westinghouse Electric Corporation, Electronic Tube Division, and shall not be reproduced or copied or used as the basis for the manufacture or sale of apparatus and/or devices without permission.

ABSOLUTE MAXIMUM RATINGS

Anode Voltage (Note 2)	16,000 max. Volts
Grid 4 (Focus) Voltage	6,000 max. Volts
Grid 2 Voltage	600 max. Volts
Grid 1 Voltage:	
Negative Bias Value	180 max. Volts
Positive Bias Value	0 max. Volts
Positive Peak Value	0 max. Volts
Peak Heater-Cathode Voltage:	
Heater Negative with respect to Cathode:	
During warm-up period of 15 sec. max.	410 max. Volts
After Equipment warm-up period	180 max. Volts
Heater Positive with respect to Cathode	180 max. Volts

LIMITING CIRCUIT VALUES

Grid 1 Circuit Resistance	1.5 max. Megohms
Grid 2 Circuit Resistance Approx.	0.5 Megohms
Focus Electrode Circuit Resistance.	10,000 min. Ohms

TYPICAL OPERATING CONDITIONS

Anode Voltage (Note 2).	12,000 Volts
Grid 4 (Focus) Voltage.	3000 to 4,400 Volts
Grid 2 Voltage	500 Volts
Grid 1 Spot Cutoff Voltage	-40 to -70 Volts
Line Width for P31 (Note 3)	0.010 Inch
Spot Position (Note 4)	10 mm
Micro-Deflection Sensitivity (Note 5)	0.3 V/mil

NOTES:

1. Westinghouse Military & Industrial Cathode Ray Tubes can be supplied with most of the standard JEDEC phosphors.
2. Operation with voltage in excess of 16 KV may require shielding to limit radiation of very soft X-rays.
3. Line width is measured by the shrinking raster method with an anode current sufficient to give a light output of 20 ft-L on a $\frac{1}{4}$" square raster.
4. With deflecting electrodes connected to anode 2, and with the tube shielded against external magnetic fields, the focused spot is within a 10 mm square centered on the tube face and with sides parallel to scanning axes.
5. Auxiliary deflection voltages must be balanced around the center focus voltage with the center values of deflection voltage well clamped to the focus voltage. Auxiliary deflections greater than $\frac{1}{2}$" may result in excessive spot distortion.

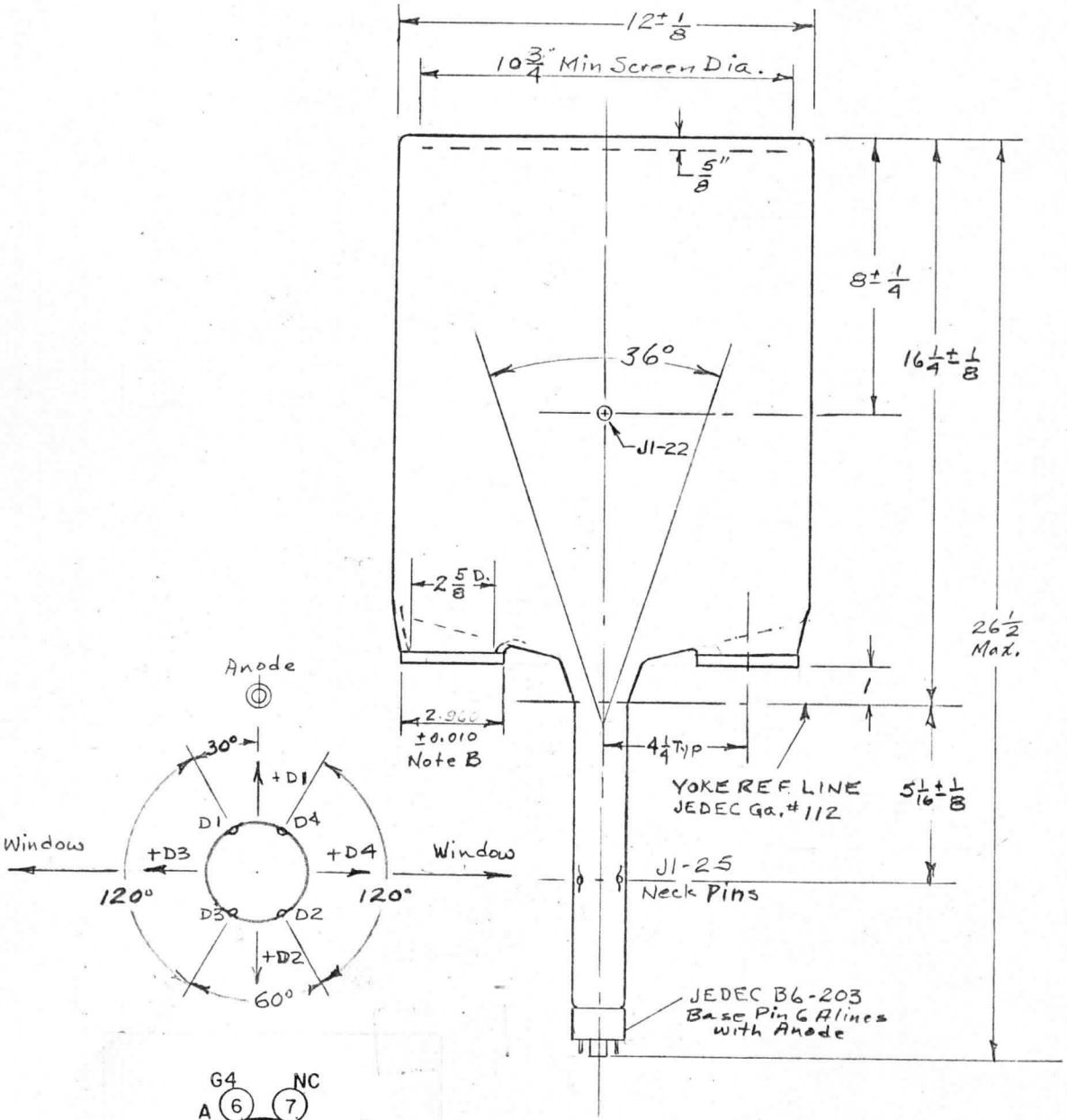
12 ± 1/8
10 3/4" Min Screen Dia.
5/8"
8 ± 1/4
16 1/4 ± 1/8
36°
J1-22
2 5/8 D.
26 1/2 Max.
2.966
±0.010
Note B
4 1/4 Typ
YOKE REF. LINE
JEDEC Ga. # 112
5 1/16 ± 1/8
J1-25
Neck Pins
JEDEC B6-203
Base Pin 6 Aligns
with Anode
Anode
30°
+D1
D1
D4
Window
+D3
+D4
Window
120°
120°
D3
D2
+D2
60°

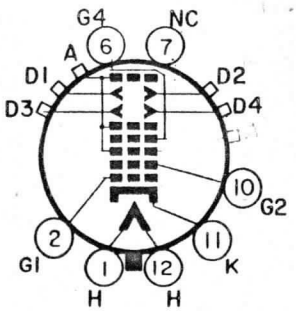
G4
NC
A
6
7
D1
D2
D3
D4
10
G2
2
11
G1
K
1
12
H
H

12" INDUSTRIAL & MILITARY CATHODE RAY TUBE TYPE WX-30211P-

Basic Characteristics	Typical Applications	Special Features
12" Round Flat Faceplate	Symbol Presentation	Double Rear Window
Electrostatic Focus	Rear-Window Viewing & Photographic Recording	0.010" Line Width
36° Magnetic Deflection	Rear-Window Image Projection	Double-Axis Auxiliary Deflection

ELECTRICAL

Cathode	Coated Unipotential
Heater:	
Voltage	6.3 Volts
Current	0.6 Ampere
Direct Interelectrode Capacitances:	
Grid 1 to all other Electrodes	10 pF
Grid 2 to all other Electrodes	8 pF
Cathode to all other Electrodes	6 pF
D1 to D2	1 pF
D3 to D4	1 pF
D1 to all other Electrodes	3.5 pF
D2 to all other Electrodes	3.5 pF
D3 to all other Electrodes	3.3 pF
D4 to all other Electrodes	3.7 pF
Focusing Method	Electrostatic
Deflection	36° Magnetic
Auxiliary Deflection	Electrostatic

OPTICAL

Screen Phosphor	Note 1
Faceplate:	
Configuration	Flat
Glass	Clear, Non Browning
Transmission	90%
Index of Refraction	1.52
Rear Windows:	
Configuration	Flat
Glass	Clear Opthalmic Quality
Transmission	90%
Index of Refraction	1.60

Δ The WX- number identifies a specific laboratory design; the design and, consequently, the data and type number are subject to change. No obligations are assumed to manufacture this particular device in the future unless otherwise arranged. These drawings and specifications are the property of Westinghouse Electric Corporation, Electronic Tube Division, and shall not be reproduced or copied or used as the basis for the manufacture or sale of apparatus and/or devices without permission.

MECHANICAL

Mounting Position	Any
Net Weight (Approx)	30 Pounds

ABSOLUTE MAXIMUM RATINGS

Anode Voltage (Note 2)	16000 max. Volts
Grid 4 (Focus) Voltage	6000 max. Volts
Grid 2 Voltage	600 max. Volts
Grid 1 Voltage:	
Negative Bias Value	180 max. Volts
Positive Bias Value	0 max. Volts
Positive Peak Value	0 max. Volts
Peak Heater-Cathode Voltage:	
Heater Negative with respect to Cathode:	
During warm-up period of 15 sec. max.	410 max. Volts
After equipment warm up	180 max. Volts
Heater Positive with respect to Cathode	180 max. Volts
Peak Voltage between Anode and any Deflection Electrode	500 max. Volts

LIMITING CIRCUIT VALUES

Grid 1 Circuit Resistance	1.5 max. Megohms
Grid 2 Circuit Resistance	0.5 approx. Megohms
Grid 4 (Focus) Circuit Resistance	10000 min. Ohms

TYPICAL OPERATION & PERFORMANCE

Anode Voltage (Note 2)	12000 Volts
Grid 4 (Focus) Voltage	3000 to 4400 Volts
Grid 2 Voltage	500 Volts
Grid 1 Spot Cutoff Voltage	-40 to -70 Volts
Line Width with P31 (Note 3)	0.010 Inch
Auxiliary Deflection Factors (Note 4)	300 V/Inch
Spot Position (Note 5)	10 mm

NOTES

1. Westinghouse Industrial & Military Cathode Ray Tubes can be supplied with most of the standard JEDEC phosphors.

2. Operation with voltage in excess of 16KV may require shielding to limit radiation of very soft X-rays.

3. Line width is measured by the skrinking raster method with an anode current sufficient to give a light output of 20 ft-L on a 0.25" square raster.

4. Auxiliary deflection voltages must be balanced around the anode voltage with the center values of deflection voltage well clamped to the anode voltage. Auxiliary deflections greater than 0.5" may result in excessive spot distortion.

5. With deflecting electrodes connected to anode and with the tube shielded against external magnetic fields, the focused spot is within a 10 mm square centered on the tube face and with sides parallel to scanning axes.

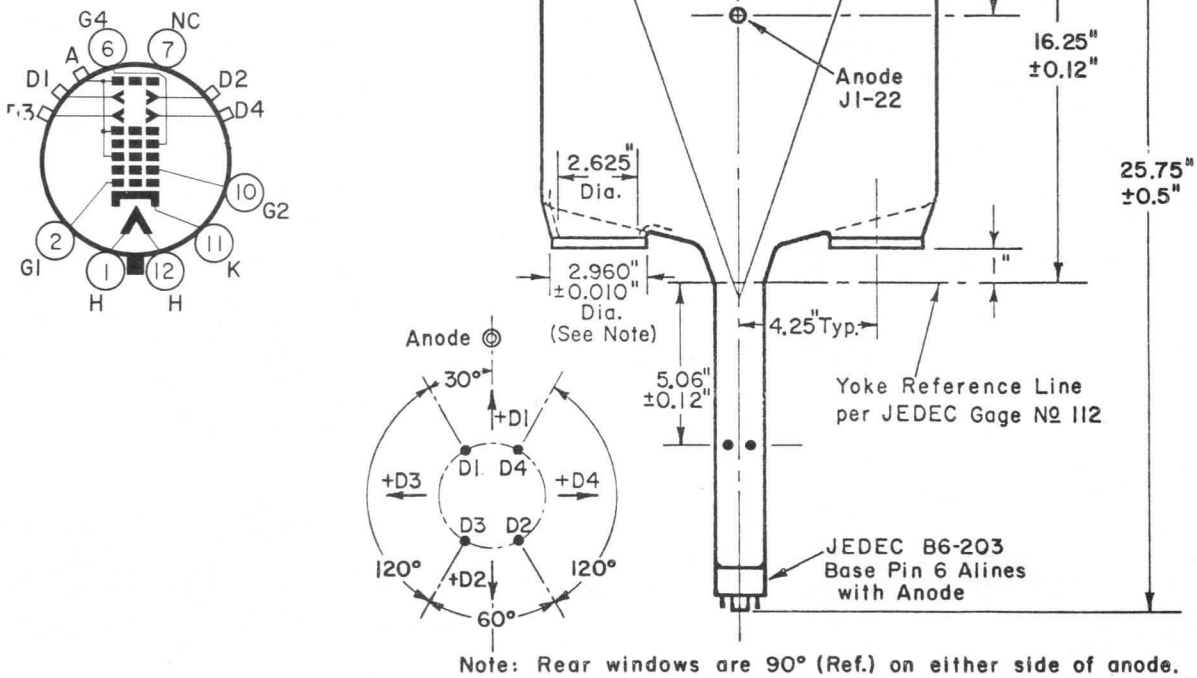

Note: Rear windows are 90° (Ref.) on either side of anode.



WESTINGHOUSE ELECTRIC CORPORATION, ELECTRONIC TUBE DIVISION, ELMIRA, NEW YORK

Westinghouse

Industrial & Military CRT Ruggedized Tube - Yoke - Shield Assembly

Type: WX-30233P-★

Magnetic Deflection, ES Focus

Line Width = 0.00065″ Center
5″ Diameter Flat Faceplate

Basic Characteristics

40° Magnetic Deflections
Electrostatic Focus
5″ Flat Faceplate

Typical Applications

Aerial Photographic
Recording
Single Line Scan Display

Special Features

0.00065″ Line Width
Reduced Deflection
Defocusing

Electrical

Cathode	Coated Unipotential
Heater:	
Voltage	6.3 Volts
Current	0.45 Ampere
Direct Interelectrode Capacitances:	
Grid 1 to all Other Electrodes	24 pF
Cathode to all Other Electrodes	17 pF
Focusing Method	Electrostatic
Deflection	40° Magnetic
Yoke Characteristics:	
Vertical Inductance	11 ± 10% mH
Vertical Resistance	11 ± 10% Ohms
Horizontal Inductance	117 ± 10% μH
Horizontal Resistance	0.3 ± 10% Ohms

Optical

Screen Phosphor	Note 1
Faceplate:	
Configuration (Note 2)	Flat
Glass	Clear
Transmission	90%
Index of Refraction	1.519

Mechanical

Mounting Position	Any
Net Weight	20 Pounds

★ The WX-number identifies a specific laboratory design; the design and, consequently, the data and type number are subject to change. No obligations are assumed to manufacture this particular device in the future unless otherwise arranged. These drawings and specifications are the property of Westinghouse Electric Corporation, Electronic Tube Division, and shall not be reproduced or copied or used as the basis for the manufacture or sale of apparatus and/or devices without permission.

Absolute Maximum Ratings

Anode Voltage (Note 3)	18000 max. Volts
Grid 3 (Focus) Voltage (Note 4)	6000 max. Volts
Grid 2 Voltage	600 max. Volts
Grid 1 Voltage:	
Negative Bias Value	180 max. Volts
Positive Bias Value	0 max. Volts
Positive Peak Value	0 max. Volts
Peak Heater-Cathode Voltage:	
Heater Negative with respect to Cathode:	
During warm-up period of 15 sec. max.	410 max. Volts
After Equipment warm-up period	180 max. Volts
Heater Positive with respect to Cathode:	
Peak	180 max. Volts
DC	0 max. Volts

Limiting Circuit Values

Grid 1 Circuit Resistance	1.5 max. Megohms
Grid 2 Circuit Resistance	See Note 5

Typical Operating Conditions & Performance

Anode Voltage (Note 3)	15000 Volts
Grid 3 (Focus) Voltage (Note 4)	4000 to 4400 Volts
Grid 2 Voltage	500 Volts
Grid 1 Spot Cut-off Voltage	−35 to −80 Volts
Line Width with P11 (Note 6):	
Center	0.00065 Inch
Edge	0.0008 Inch
Deflection Sensitivity:	
Vertical	0.13 Amperes/Inch
Horizontal	1.2 Amperes/Inch
Spot Position (Note 7)	3 mm

Environmental Capability

The WX-30233P- will withstand, without damage, vibration at 10G from 55 to 500 CPS and will operate without degradation of performance while subjected to vibration at 0.08″ double amplitude up to 27 CPS and at 3G from 27 to 500 CPS.

Notes

1. Westinghouse Military & Industrial Cathode Ray Tubes can be supplied with most of the standard JEDEC phosphors.
2. The faceplate is a ground and polished flat plate 0.495″ ± 0.005″ thick with a maximum deviation from mean thickness for individual plates of 0.001″. Maximum deviation from flatness is 0.001″ within a circle of 4″ diameter centered on the tube axis. Faceplate tilt, relative to the tube axis, will not exceed 0.5°.
3. Operation with voltage in excess of 16KV may require shielding to limit radiation of very soft x-rays.
4. The grid 3 electrode may draw a peak current of 2 milliamperes with a representative value of 300 microamperes under normal operation.
5. A grid 2 circuit resistance of approximately 0.5 megohm should be provided. In addition it is recommended that a suitable device be used to limit grid 2 voltage to the maximum rated value to prevent tube damage in case of a momentary arc.
6. Line width is defined as the distance between the half-amplitude points of the light-energy distribution of the line and is measured with a peak current of 1 microampere, using the split-scan technique described in Westinghouse reprint #5510. Line width with other phosphors may vary slightly. Dynamic focus modulation is necessary to maintain optimum resolution over entire face. Close control of supply regulation and ripple is necessary to ensure optimum focus. Typically, a 0.1% change in focus or anode voltage, from best value, will increase spot size approximately 10%.
7. The undeflected focused spot lies within a circle of 3 mm radius concentric with the faceplate.

March 1969
Supersedes WX-30233P- dated July 5, 1967
S6−2C−11C, S5−10A, WI−1300

Industrial & Military CRT
Ruggedized Tube - Yoke - Shield Assembly

Type: WX-30233P-★

Magnetic Deflection, ES Focus

Line Width = 0.00065" Center
5" Diameter Flat Faceplate

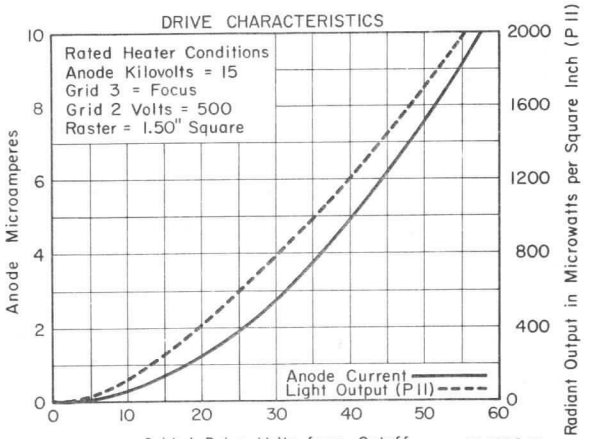

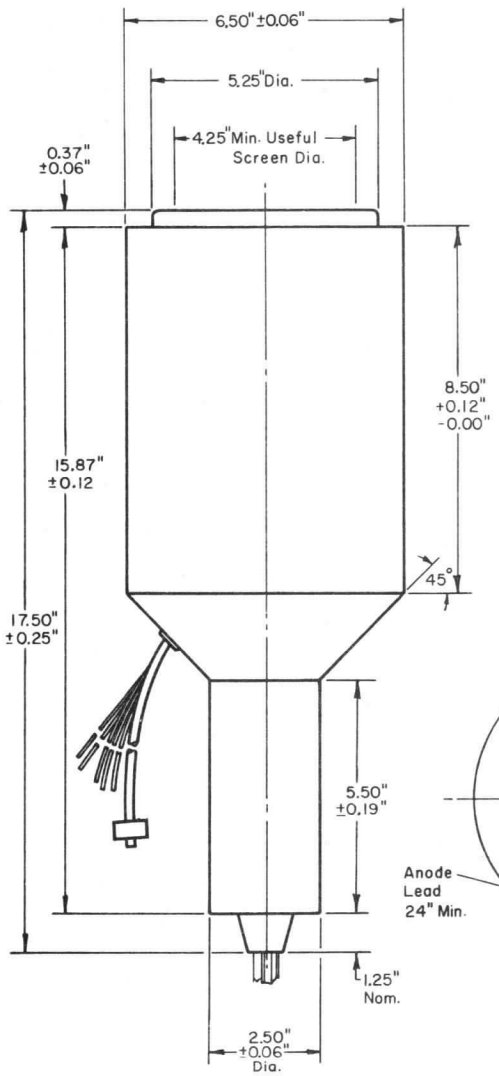

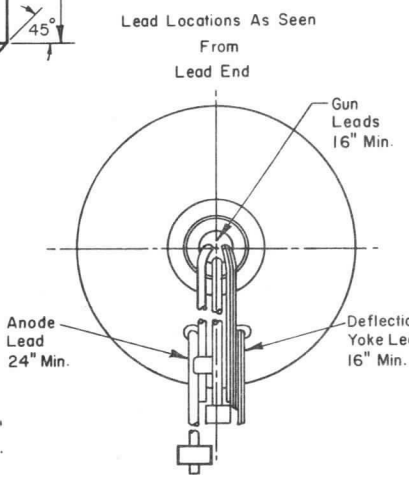

Lead Index

Gun Leads

Heater	Brown
Cathode	Purple
Grid 1	Green
Grid 2	AMP 832692 (yellow)
Grid 3 (Focus)	AMP 832692 (white)

Bulb Leads

Anode	AMP 833779

Deflection Yoke Leads

			Facing CRT
+	Connect	—	Spot Moves
Blue	White & Red	Brown	Up
Green	Black & Orange	Yellow	Left

Westinghouse Electric Corporation
Electronic Tube Division, Elmira, N. Y. 14902
Printed in U.S.A.

Westinghouse

Industrial & Military CRT

Type: WX-30297P- ★

ES Focus, Magnetic Deflection
Line Width = 0.0013″ (0.033mm)
5″ (133mm) Round Flat Faceplate

Basic Characteristics
5″ (133mm) Round Flat Faceplate
Electrostatic Focus
42° Magnetic Deflection
Aluminized Screen

Typical Applications
Photographic Recording
Flying-Spot Scanning

Special Features
Line Width = 0.0013″ (0.033mm)

Electrical

Cathode	Coated Unipotential
Heater:	
Voltage	6.3 Volts
Current	0.6 Ampere
Direct Interelectrode Capacitances:	
Grid 1 to All Other Electrodes	9 pF
Grid 2 to All Other Electrodes	7 pF
Cathode to All Other Electrodes	7 pF
Focusing Method	Electrostatic
Deflection	42° Magnetic

Optical

Screen Phosphor	Note 1
Faceplate:	
Configuration (Note 2)	Flat
Glass	Clear, Non-Browning
Transmission	91%
Index of Refraction	1.152

Mechanical

Mounging Position	Any
Net Weight	2 Pounds
	0.9 Kilograms

Absolute Maximum Ratings

Anode Voltage	12500 max. Volts
Grid 3 (Focus) Voltage (Note 3)	5000 max. Volts
Grid 2 Voltage	600 max. Volts
Grid 1 Voltage:	
Negative Bias Value	180 max. Volts
Positive Bias Value	0 max. Volts
Positive Peak Value	0 max. Volts
Heater-Cathode Voltage:	
Heater Negative with respect to Cathode:	
During Warm-up Period of 15 sec. max.	410 max. Volts
After Equipment Warm-up Period	180 max. Volts
Heater Positive with respect to Cathode:	
Peak	180 max. Volts
DC	25 max. Volts

Limiting Circuit Values

Grid 1 Circuit Resistance	1.5 max. Megohms
Grid 2 Circuit Resistance	See Note 4

Typical Operating Conditions

Anode Voltage	10000 Volts
Grid 3 (Focus) Voltage (Note 3)	2850 to 3150 Volts
Grid 2 Voltage	300 Volts
Grid 1 Spot Cutoff Voltage	−40 to −65 Volts
Line Width with P16 (Note 5)	0.0013 Inch
	0.033 mm
Spot Position (Note 6)	7.5 mm

AVERAGE GRID-DRIVE CHARACTERISTICS

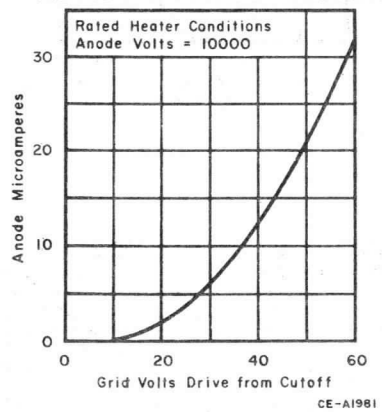

CE-A1981

Notes

1. Westinghouse Military & Industrial Cathode Ray Tubes can be supplied with most of the standard JEDEC phosphors.
2. The faceplate is a ground and polished flat plate 0.245″ (6.22mm) ± 0.005″ (0.13mm) thick with a maximum deviation from mean thickness for individual plates of 0.001″ (0.03mm). Maximum deviation from flatness is 0.006″ (0.15mm) within a circle of 4.25″ (108.0mm) diameter centered on the tube axis.
3. The grid 3 electrode may draw a peak current of 1.5 milliamperes with a representative value of 300 microamperes under normal operation.
4. A grid 2 circuit resistance of approximately 0.5 megohm should be provided. In addition it is recommended that a suitable device be used to limit grid 2 voltage to the maximum rated value to prevent tube damage in case of a momentary arc.
5. Line width is defined as the distance between the half-amplitude points of the light-energy distribution of the line and is measured with a peak current of 1 microampere, using the slit-scan technique described in Westinghouse Pub. No. 86-70 (Reprint 5510). Line width with other phosphors may vary slightly. Dynamic focus modulation is necessary to maintain optimum resolution over entire face. Close control of supply regulation and ripple is necessary to ensure optimum focus. Typically, a 0.1% change in focus or anode voltage, from best value, will increase spot size approximately 10%.
6. With the tube shielded against external magnetic fields, the undeflected focused spot lies within a circle of 7.5mm radius concentric with the faceplate.

★ The WX-number identifies a specific laboratory design; the design and, consequently, the data and type number are subject to change. No obligations are assumed to manufacture this particular device in the future unless otherwise arranged. These drawings and specifications are the property of Westinghouse Electric Corporation, Electronic Tube Division, and shall not be reproduced or copied or used as the basis for the manufacture or sale of apparatus and/or devices without permission.

November 1970
Supersedes WX-30297P- dated March 25, 1965
TC−2236-2

Industrial & Military CRT

Type: WX-30297P-

ES Focus, Magnetic Deflection
Line Width = 0.0013" (0.033mm)
5" (133mm) Round Flat Faceplate

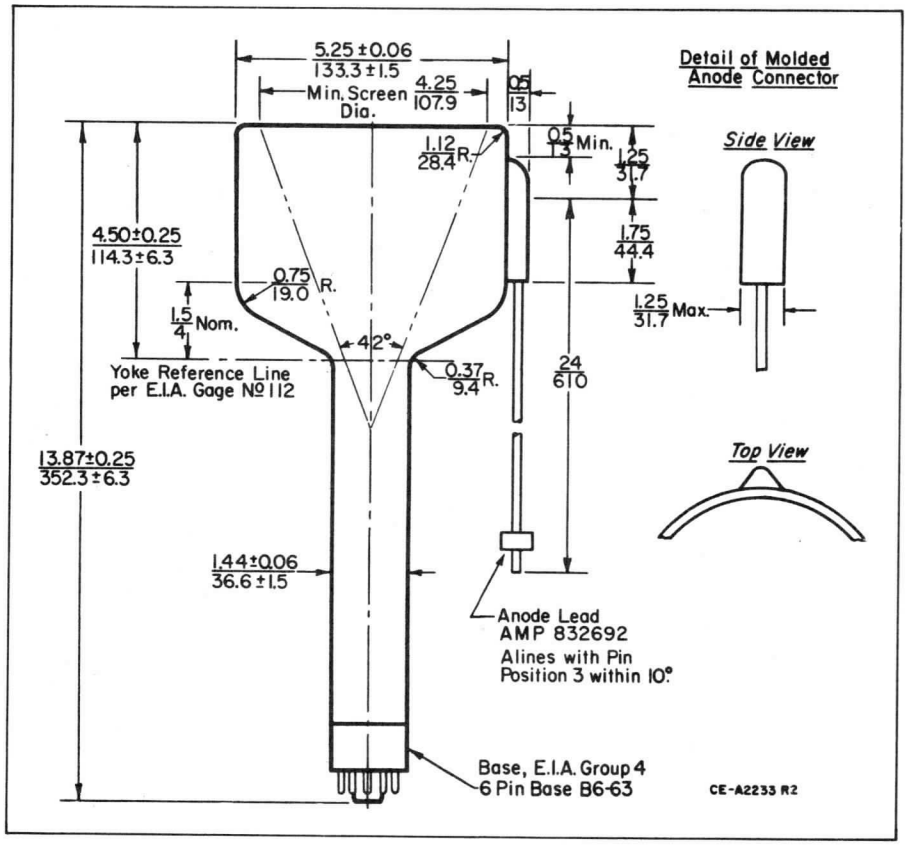

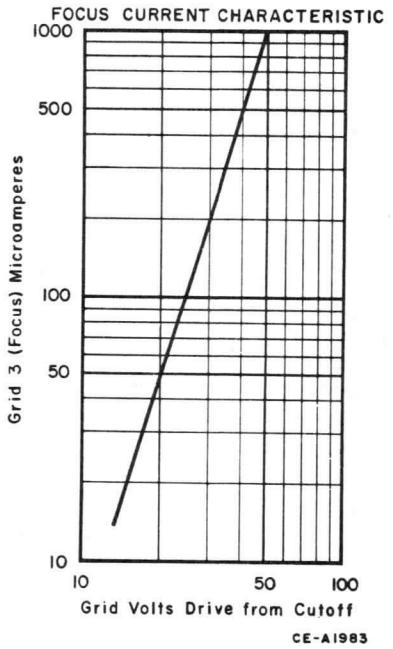

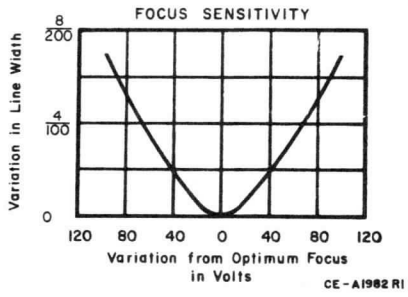

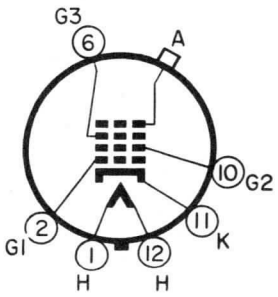

12 Q

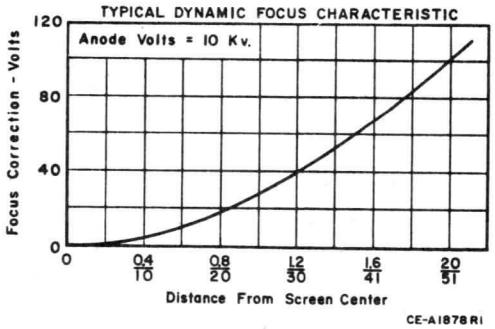

(Dimensions in inches/mm unless otherwise shown) The millimeter dimensions are derived from the original inch dimensions, 1" = 25.4 mm exactly.

Westinghouse Electric Corporation
Electronic Tube Division, Elmira, N. Y. 14902
Printed in U.S.A.

Westinghouse

Industrial & Military CRT
Magnetic Focus & Deflection

Type WX-30315P- ▲
Line Width = 0.0015"
7" Round Flat Faceplate

Basic Characteristics
7" Dia. Flat Face
40° Magnetic Deflection
Magnetic Focus

Typical Applications
Film Recording
Flying Spot Scanner

Special Features
0.0015" Line Width
Moulded Anode Connector

Electrical

Cathode	Coated Unipotential	
Heater:		
Voltage	6.3	Volts
Current	0.45	Ampere
Direct Interelectrode Capacitances:		
Grid 1 to All Other Electrodes	9	pF
Grid 2 to All Other Electrodes	7	pF
Cathode to All Other Electrodes	7	pF
Focusing Method	Magnetic	
Deflection	40° Magnetic	

Optical

Screen Phosphor	Note 1
Faceplate:	
Configuration (Note 2)	Flat
Glass	Clear, Non Browning
Transmission	90%
Index of Refraction	1.519

Mechanical

Mounting Position	Any
Net Weight	4 Pounds

Absolute Maximum Ratings

Anode Voltage (Note 3)	22000	max.	Volts
Grid 2 Voltage	2200	max.	Volts
Grid 1 Voltage:			
Negative Bias Value	180	max.	Volts
Positive Bias Value	0	max.	Volts
Positive Peak Value	0	max.	Volts
Peak Heater-Cathode Voltage:			
Heater Negative with Respect to Cathode:			
During Warm-up Period of 15 Sec. Max.	410	max.	Volts
After Equipment Warm-up	180	max.	Volts
Heater Positive with Respect to Cathode	180	max.	Volts

Limiting Circuit Values

Grid 1 Circuit Resistance	1.5	max.	Megohms
Grid 2 Circuit Resistance (Note 4)	0.5	approx.	Megohms

Typical Operation & Performance

Anode Voltage	15000	Volts
Grid 2 Voltage	2000	Volts
Grid 1 Spot Cutoff Voltage	−40 to −100	Volts
Max. Line Width "A" with P16 (Note 5)	0.0015	Inch
Spot Position (Note 6)	8	mm

Notes

1. Westinghouse Military & Industrial Cathode Ray Tubes can be supplied with most of the standard JEDEC phosphors.
2. The faceplate is a ground and polished flat plate 0.40" ± 0.03" thick with a max. deviation from mean thickness for individual plates of 0.005". Maximum deviation from flatness is 0.005" within a circle of 6.25" diameter centered on the tube axis.
3. Operation with voltage in excess of 16KV may require shielding to limit radiation of very soft X-rays.
4. A grid 2 circuit resistance of approximately 0.5 megohm should be provided. In addition it is recommended that a suitable device be used to limit grid 2 voltage to the maximum rated value to prevent tube damage in case of a momentary arc.
5. Line width is defined as the distance between the half-amplitude points of the light-energy distribution of the line and is measured with a peak current of 1 microampere using the slit-scan technique described in Westinghouse reprint #5510. Line width with other phosphors may vary slightly. Dynamic focus modulation is necessary to maintain optimum resolution over entire face.
6. With the tube shielded against external magnetic fields, the undeflected focused spot lies within a circle of 8 mm radius concentric with the faceplate.

March 1967
New Information
S6-2C-11C, S5-10A, WI-1300

Industrial & Military CRT
Magnetic Focus & Deflection

Type WX- 30315P- ▲
Line Width = 0.0015"
7" Round Flat Faceplate

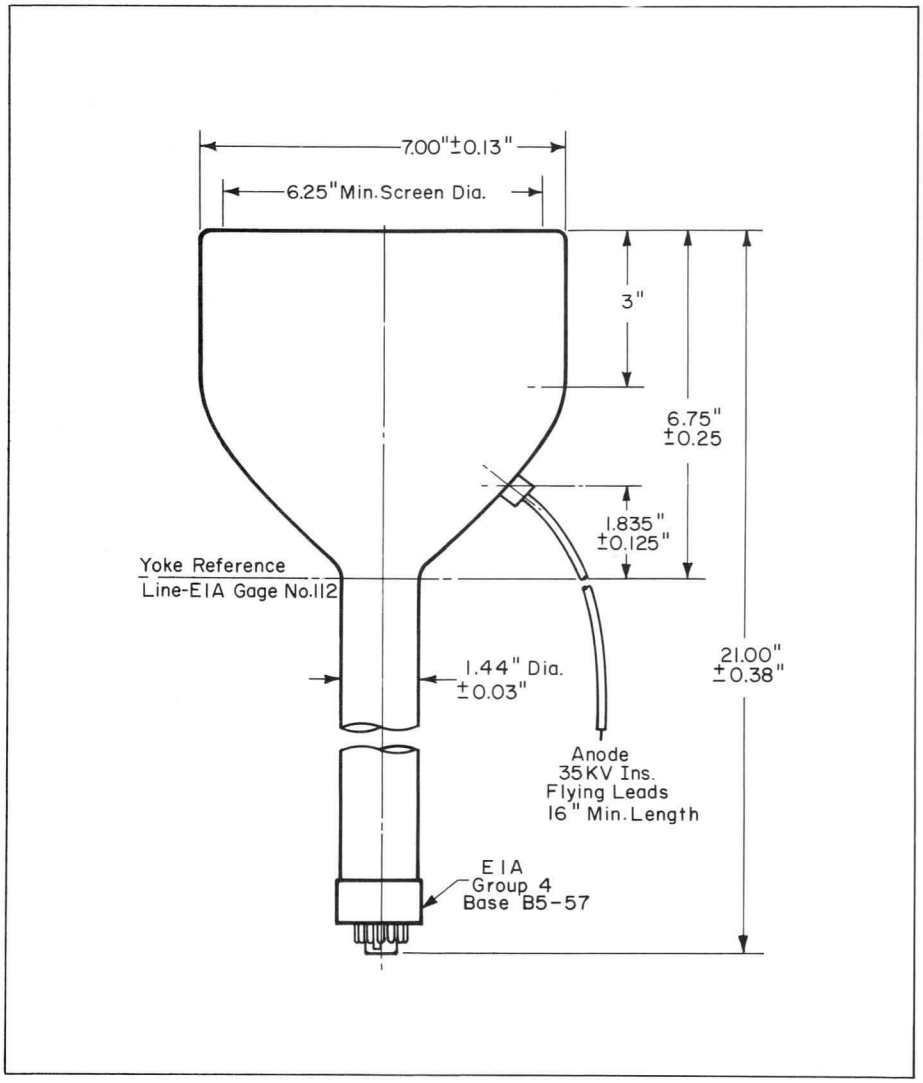

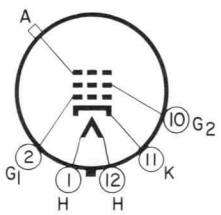

▲ The WX- number identifies a specific laboratory design; the design and, consequently, the data and type number are subject to change. No obligations are assumed to manufacture this particular device in the future unless otherwise arranged.
These drawings and specifications are the property of Westinghouse Electric Corporation, Electronic Tube Division, and shall not be reproduced or copied or used as the basis for the manufacture or sale of apparatus and/or devices without permission.

Westinghouse Electric Corporation
Electronic Tube Division, Elmira, N.Y. 14902
Printed in U.S.A.

16" INDUSTRIAL & MILITARY CATHODE RAY TUBE TYPE WX-30336P-

Basic Characteristics	Typical Applications	Special Features
16" Round 53° Magnetic Deflection Electrostatic Focus Aluminized	Radar	0.014" Line Width

ELECTRICAL

Cathode	Coated Unipotential
Heater:	
Voltage	6.3 Volts
Current	0.6 Ampere
Direct Interelectrode Capacitances:	
Grid 1 to all other Electrodes	9 pF
Grid 2 to all other Electrodes	7 pF
Cathode to all other Electrodes	7 pF
Focusing Method	Electrostatic
Deflection	53° Magnetic

OPTICAL

Screen Phosphor	Note 1
Faceplate:	
Configuration	Spherical
Glass	Neutral Gray
Transmission	76%

MECHANICAL

Mounting Position	Any
Net Weight (Approx.)	17 Pounds

ABSOLUTE MAXIMUM RATINGS

Anode Voltage (Note 2)	22000 max. Volts
Grid 4 (Focus) Voltage	1000 max. Volts
Grid 2 Voltage	600 max. Volts
Grid 1 Voltage:	
Negative Bias Value	180 max. Volts
Positive Bias Value	0 max. Volts
Positive Peak Value	0 max. Volts
Peak Heater-Cathode Voltage:	
Heater Negative with respect to Cathode:	
During warm-up period of 15 sec. max.	410 max. Volts
After equipment warm up	180 max. Volts
Heater Positive with respect to Cathode	180 max. Volts

Δ The WX- number identifies a specific laboratory design; the design and, consequently, the data and type number are subject to change. No obligations are assumed to manufacture this particular device in the future unless otherwise arranged. These drawings and specifications are the property of Westinghouse Electric Corporation, Electronic Tube Division, and shall not be reproduced or copied or used as the basis for the manufacture or sale of apparatus and/or devices without permission.

LIMITING CIRCUIT VALUES

Grid 1 Circuit Resistance	1.5 max. Megohms
Grid 2 Circuit Resistance	0.5 approx. Megohms
Grid 4 (Focus) Circuit Resistance	10000 min. Ohms

TYPICAL OPERATION & PERFORMANCE

Anode Voltage (Note 2)	15000 Volts
Grid 4 (Focus) Voltage	0 to 400 Volts
Grid 2 Voltage	400 Volts
Grid 1 Spot Cutoff Voltage	-35 to -75 Volts
Max. Line Width "A" (Note 3)	0.014 Inch
Spot Position (Note 4)	12 mm

NOTES

1. Westinghouse Industrial & Military Cathode Ray Tubes can be supplied with most of the standard JEDEC phosphors.

2. Operation with voltage in excess of 16KV may require shielding to limit radiation of very soft X-rays.

3. Line width is measured by the shrinking raster method with an anode current of 100 microamperes.

4. With the tube shielded against external magnetic fields, the undeflected focused spot lies within a circle of 12 mm radius concentric with the faceplate.

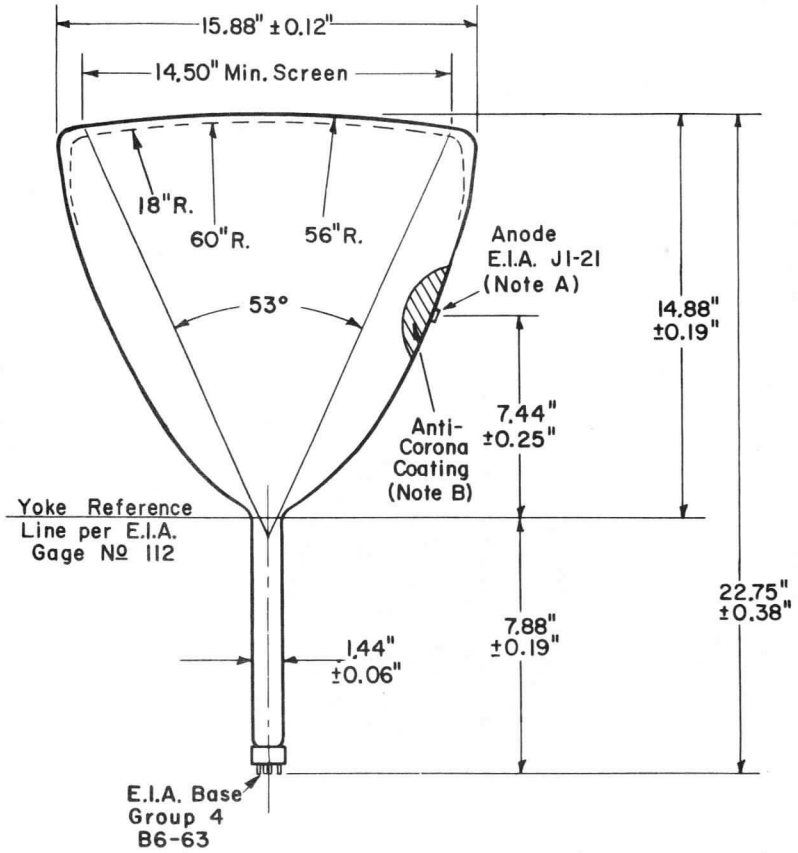

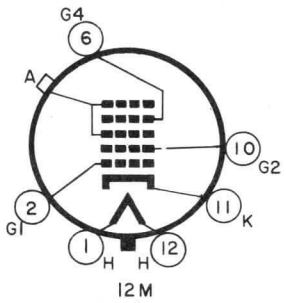

A. The plane defined by the tube axis and pin position 3 will be within 30° of the plane defined by the tube axis and the anode.

B. Anti Corona Coating: Area concentric with anode terminal and having radius of 1.5" minimum. Caution: handling tube in coated area may impair its effectiveness.



WESTINGHOUSE ELECTRIC CORPORATION, ELECTRONIC TUBE DIVISION, ELMIRA, NEW YORK

5" INDUSTRIAL & MILITARY CATHODE RAY TUBE TYPE WX-30566P-

Basic Characteristics	Typical Applications	Special Features
5" Round Flat Faceplate Electrostatic Focus 42° Magnetic Deflection Alumnized Screen	Photographic Recording Flying Spot Scanning Precision Radar	0.002" Line Width at 5 Microamperes 0.004" Line Width at 50 Microamperes

ELECTRICAL

Cathode	Coated Unipotential
Heater:	
Voltage	6.3 Volts
Current	0.6 Ampere
Direct Interelectrode Capacitances:	
Grid 1 to all other Electrodes	9 pF
Grid 2 to all other Electrodes	7 pF
Cathode to all other Electrodes	7 pF
Focusing Method	Electrostatic
Deflection	42° Magnetic

OPTICAL

Screen Phosphor	Note 1
Faceplate:	
Configuration (Note 2)	Flat
Glass	Clear, Non-Browning
Transmission	91%
Index of Refraction	1.52

MECHANICAL

Mounting Position	Any
Net Weight	2 Pounds

ABSOLUTE MAXIMUM RATINGS

Anode Voltage (Note 3)	22000 max. Volts
Grid 3 (Focus) Voltage (Note 4)	3500 max. Volts
Grid 2 Voltage	600 max. Volts
Grid 1 Voltage:	
Negative Bias Value	180 max. Volts
Positive Bias Value	0 max. Volts
Positive Peak Value	0 max. Volts
Peak Heater-Cathode Voltage:	
Heater Negative with respect to Cathode:	
During warm-up period of 15 sec. max.	410 max. Volts
After equipment warm up	180 max. Volts
Heater Positive with respect to Cathode	180 max. Volts

Δ The WX- number identifies a specific laboratory design; the design and, consequently, the data and type number are subject to change. No obligations are assumed to manufacture this particular device in the future unless otherwise arranged. These drawings and specifications are the property of Westinghouse Electric Corporation, Electronic Tube Division, and shall not be reproduced or copied or used as the basis for the manufacture or sale of apparatus and/or devices without permission.

LIMITING CIRCUIT VALUES

Grid 1 Circuit Resistance	1.5 max. Megohms
Grid 2 Circuit Resistance	See Note 5

TYPICAL OPERATION & PERFORMANCE

Anode Voltage	10000 Volts
Grid 3 (Focus) Voltage	1450 to 1650 Volts
Grid 2 Voltage	300 Volts
Grid 1 Spot Cutoff Voltage	-40 to -70 Volts
Max. Line Width "A" with P11 (Note 6):	
At 4 Microamperes	0.002 Inch
At 50 Microamperes	0.004 Inch

NOTES

1. Westinghouse Industrial & Military Cathode Ray Tubes can be supplied with most of the standard JEDEC phosphors.

2. The faceplate is a ground and polished flat plate 0.245" ± 0.005" thick with a max. deviation from mean thickness for individual plates of 0.001". Maximum deviation from flatness is 0.006" within a circle of 4.25" diameter centered on the tube axis.

3. Operation with voltage in excess of 16KV may require shielding to limit radiation of very soft X-rays.

4. The grid 3 electrode may draw a peak current of 1 milliampere with a representative value of 300 microamperes under normal operation.

5. A grid 2 circuit resistance of approximately 0.5 megohm should be provided. In addition, it is recommended that a suitable device be used to limit grid 2 voltage to the maximum rated value to prevent tube damage in case of a momentary arc.

6. Line width is defined as the distance between the half-amplitude points of the light-energy distribution of the line. At 5 microamperes line width is measured using the slit-scan technique described in Ⓦ reprint #5510. At 50 microamperes, line width is measured by the shrinking raster method. Line width with other phosphors may vary slightly. Dynamic focus modulation is necessary to maintain optimum resolution over entire face. Close control of supply regulation and ripple is necessary to ensure optimum focus. Typically, a 1% change in focus or anode voltage, from best value, will increase spot size approximately 10%.

7. With the tube shielded against external magnetic fields, the undeflected focused spot lies within a circle of 8 mm radius concentric with the faceplate.

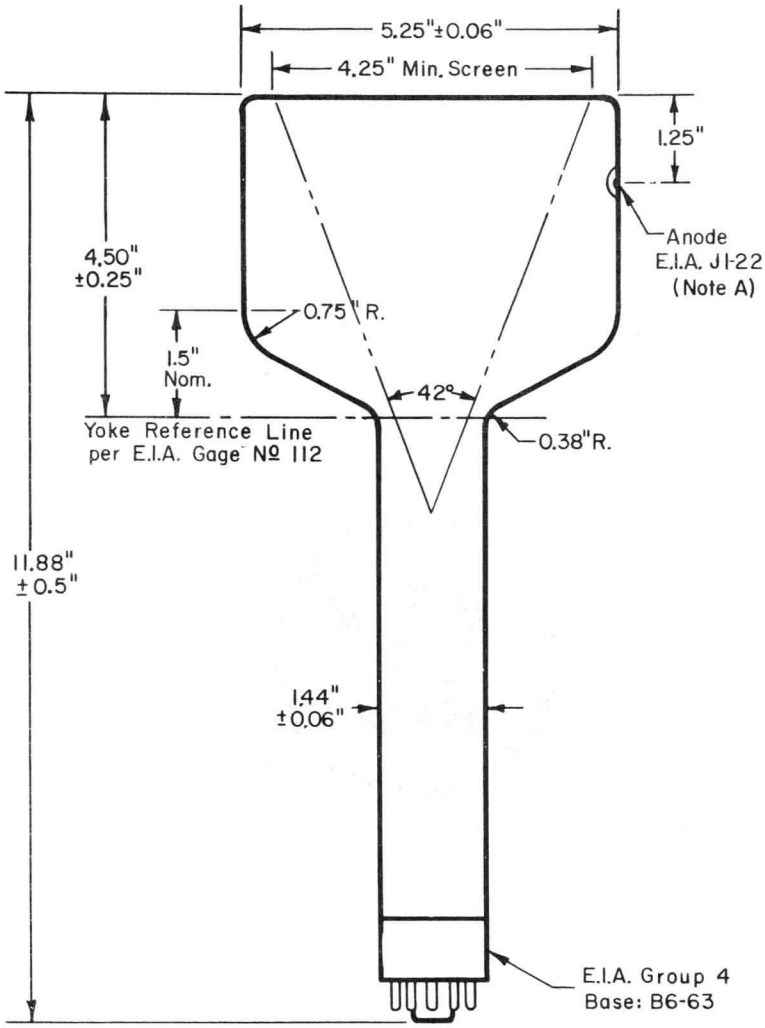

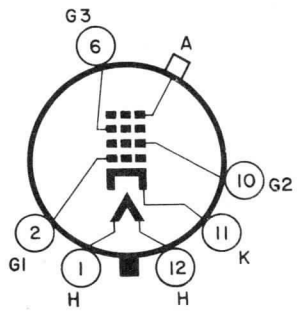

12Q

A. The plane defined by the tube axis and pin position 3 will be within 10° of the plane defined by the tube axis and the anode.



WESTINGHOUSE ELECTRIC CORPORATION, ELECTRONIC TUBE DIVISION, ELMIRA, NEW YORK

Industrial & Military CRT

Westinghouse

12", 110° Magnetic Deflection, ES Focus

Type: WL-30580P-
Etched, Laminated Safety Panel
Line Width = 0.015"

Basic Characteristics

12" Rectangular
110° Magnetic Deflection
Low Voltage ES Focus

Typical Applications-

Monitor

Special Features

Implosion Protection by
Etched, Laminated
Safety Panel
0.015" Line Width

Electrical

Cathode	Coated Unipotential
Heater:	
Voltage	6.3 Volts
Current	0.45 Ampere
Direct Interelectrode Capacitances:	
Grid 1 to All Other Electrodes	6 pF
Cathode to All Other Electrodes	5 pF
Focusing Method	Electrostatic
Deflection	110° Magnetic

Optical

Screen Phosphor	Note 1
Faceplate:	
Configuration	Spherical
Transmission	48%
Safety Panel:	
Configuration	Spherical
Transmission	31%
Overall Transmission (Approx.)	16%

Mechanical

Mounting Position	Any
Net Weight (Approx.)	6.75 Pounds

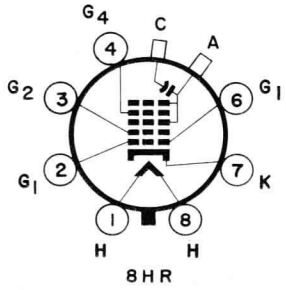

Absolute Maximum Ratings (Grid Drive Operation)

Anode Voltage	15000 max.	Volts
Grid 4 (Focus) Voltage	1100 max.	Volts
Grid 2 Voltage	600 max.	Volts
Grid 1 Voltage:		
Negative Bias Value	180 max.	Volts
Positive Bias Value	0 max.	Volts
Positive Peak Value	0 max.	Volts
Heater-Cathode Voltage:		
Heater Negative with respect to Cathode:		
During Warm-up Period of 15 Seconds Maximum	410 max.	Volts
After Equipment Warm-up Period	200 max.	Volts
Heater Positive with respect to Cathode:		
Peak	180 max.	Volts
DC	25 max.	Volts

Limiting Circuit Values

Grid 1 Circuit Resistance	1.5 max.	Megohms
Grid 2 Circuit Resistance	0.5 Approx.	Megohms
Focus Electrode Circuit Resistance	10000 min.	Ohms

Typical Operation & Performance

Anode Voltage	12000	Volts
Grid 4 (Focus) Voltage	0 to 400	Volts
Grid 2 Voltage	400	Volts
Grid 1 Spot Cut-off Voltage	−45 to −85	Volts
Cathode Drive Spot Cut-off Voltage	+42 to +75	Volts
Maximum Line Width "A" with P4 (Note 2)	0.015	Inch

Notes

1. Westinghouse Military & Industrial Cathode Ray Tubes can be supplied with most of the standard JEDEC phosphors.
2. Line width is measured, before etched safety panel is installed, by the shrinking raster method with an anode current of 300 microamperes.

The information contained herein is supplied without assuming responsibility for infringement of patents or other rights of third parties which may result from its use. No license is granted by implication or otherwise under any patent or patent rights of Westinghouse Electric Corporation.

September 1968
New Information
S6−2C−11C, S5−10A, WI−1300

Industrial & Military CRT

12″, 110° Magnetic Deflection, ES Focus

Type: WL-30580P-
Etched, Laminated Safety Panel
Line Width = 0.015″

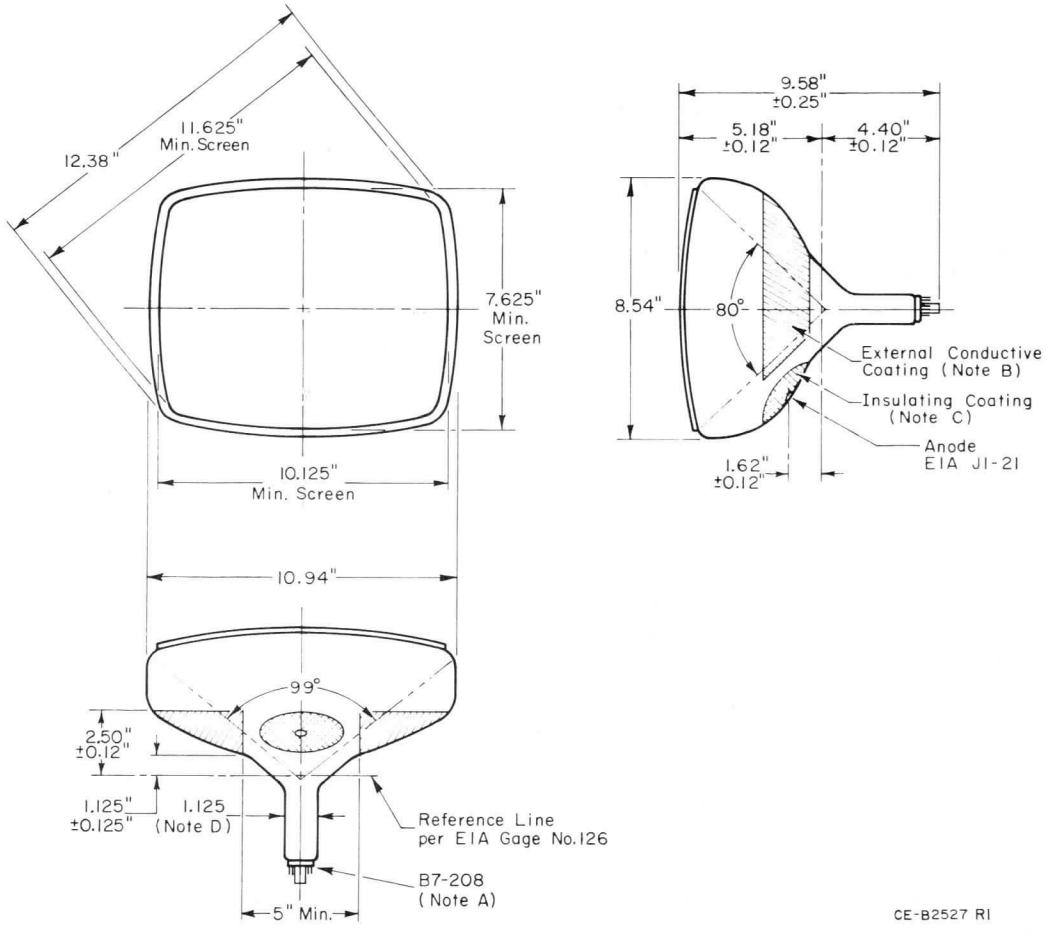

Outline Notes

A. Lateral strains on base pins must be avoided. The socket should have flexible leads permitting movement. The perimeter of the base wafer will be inside a 1.750″ diameter circle concentric with tube axis. Base pin 2 aligns with minor axis within 30° and is on same side as anode terminal.

B. External conductive coating forms supplementary filter capacitance and must be grounded.

C. Transparent insulating coating 3″ in diameter. Clean only with soft, dry, lintless cloth.

D. Neck diameter may be a maximum of 1.168″ at the splice.

E. Shell must be grounded.

Westinghouse Electric Corporation
Electronic Tube Division, Elmira, N. Y. 14902
Printed in U. S. A.

Westinghouse

Industrial & Military CRT

Magnetic Deflection, ES Focus

Type WX-30582P- ▲
Compact, Flying Leads
5" Round Faceplate

Basic Characteristics
5" Round
70° Magnetic Deflection
Aluminized
0.87" Neck Diameter

Typical Applications
Precision Radar

Special Features
0.004" Line Width at 50 μA
Compact
Low Deflection Power
Flying Leads

Electrical

Cathode	Coated Unipotential
Heater:	
Voltage	6.3 Volts
Current	0.3 Ampere
Direct Interelectrode Capacitances:	
Grid 1 to All Other Electrodes	9 pF
Grid 2 to All Other Electrodes	7 pF
Cathode to All Other Electrodes	7 pF
Focusing Method	Electrostatic
Deflection	70° Magnetic

Optical

Screen Phosphor	Note 1
Faceplate:	
Configuration	Spherical
Glass	Clear
Transmission	90%
Index of Refraction	1.56

Mechanical

Mounting Position	Any
Net Weight	1 Pound

Absolute Maximum Ratings

Anode Voltage (Note 2)	18000	max.	Volts
Grid 3 (Focus) Voltage	2200	max.	Volts
Grid 2 Voltage	600	max.	Volts
Grid 1 Voltage:			
Negative Bias Value	180	max.	Volts
Positive Bias Value	0	max.	Volts
Positive Peak Value	0	max.	Volts
Peak Heater-Cathode Voltage:			
Heater Negative with Respect to Cathode:			
During Warm-up Period of 15 Sec. Max.	410	max.	Volts
After Equipment Warm-up	180	max.	Volts
Heater Positive with Respect to Cathode	180	max.	Volts

Limiting Circuit Values

Grid 1 Circuit Resistance	1.5	max.	Megohms
Grid 2 Circuit Resistance (Note 3)	0.5	approx.	Megohms

Typical Operation & Performance

Anode Voltage	10000	Volts
Grid 3 (Focus) Voltage (Note 4)	1600 to 2000	Volts
Grid 2 Voltage	300	Volts
Grid 1 Spot Cutoff Voltage	−25 to −60	Volts
Max. Line Width "A" with P31 (Note 5)	0.004	Inch
Spot Position (Note 6)	5	mm

Notes

1. Westinghouse Military & Industrial Cathode Ray Tubes can be supplied with most of the standard JEDEC phosphors.
2. Operation with voltage in excess of 16KV may require shielding to limit radiation of very soft X-rays.
3. A grid 2 circuit resistance of approximately 0.5 megohm should be provided. In addition it is recommended that a suitable device be used to limit grid 2 voltage to the maximum rated value to prevent tube damage in case of a momentary arc.
4. The grid 3 electrode may draw a peak current of 1 milliamperes with a representative value of 50 microamperes under normal operation.
5. Line width is measured by the shrinking raster method with a peak current of 50 microamperes. Line width with other phosphors may vary slightly. Dynamic focus modulation is necessary to maintain optimum resolution over entire face. Close control of supply regulation and ripple is necessary to ensure optimum focus. Typically, a 1% change in focus or anode voltage, from best value, will increase spot size approximately 10%.
6. With the tube shielded against external magnetic fields, the undeflected focused spot lies within a circle of 5 mm radius concentric with the faceplate.

March 1967
New Information
S6-2C-11C, S5-10A, WI-1300

Industrial & Military CRT

Magnetic Deflection, ES Focus

Type WX-30582P- ▲
Compact, Flying Leads
5" Round Faceplate

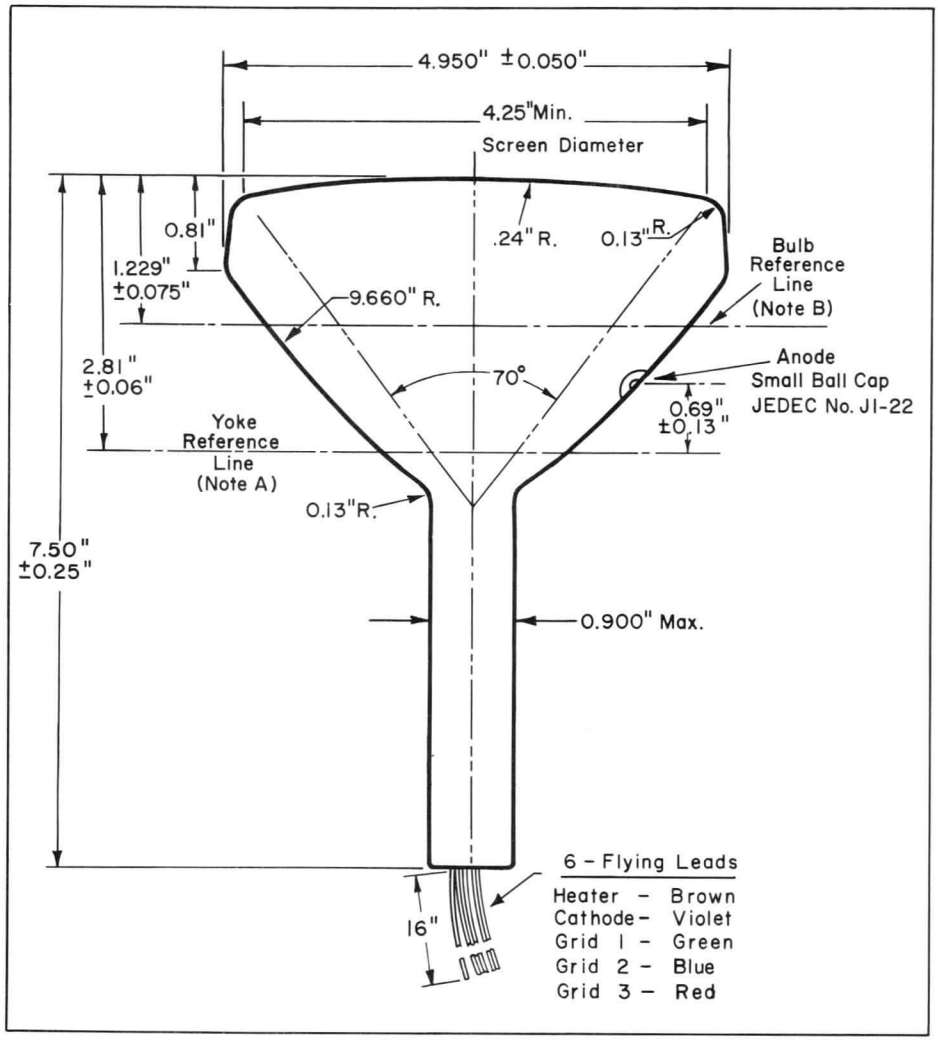

Outline Notes

A. The Yoke Reference Line is determined by JEDEC Reference Line Gage No.

B. Bulb Reference Line is determined by leading edge of a 4.625" ± 0.002" I.D. ring gage.

▲ The WX- number identifies a specific laboratory design; the design and, consequently, the data and type number are subject to change. No obligations are assumed to manufacture this particular device in the future unless otherwise arranged. These drawings and specifications are the property of Westinghouse Electric Corporation, Electronic Tube Division, and shall not be reproduced or copied or used as the basis for the manufacture or sale of apparatus and/or devices without permission.

Westinghouse Electric Corporation
Electronic Tube Division, Elmira, N.Y. 14902
Printed in U.S.A.

Westinghouse

Industrial & Military CRT

Type: WX-30733P- ★

Magnetic Focus & Deflection
Line Width = 0.0015″
0.2″ x 8″ Fiber-Optic Faceplate

Basic Characteristics

0.2″ x 8″ Fiber-Optic Faceplate
55° Magnetic Deflection
Magnetic Focus

Typical Applications

Character Print Out
on
Photo-Sensitive Paper

Special Features

0.0015″ Line Width

Electrical

Cathode	Coated Unipotential
Heater:	
Voltage	6.3 Volts
Current	0.60 Ampere
Direct Interelectrode Capacitances:	
Grid 1 to All Other Electrodes	6 pF
Cathode to All Other Electrodes	5 pF
Focusing Method	Magnetic
Deflection	55° Magnetic

Optical

Screen Phosphor	Note 1
Faceplate:	
Configuration	Flat
Glass	Fiber Optic
Numerical Aperture	0.66

Mechanical

Mounting Position	Any
Net Weight	4.5 Pounds

Absolute Maximum Ratings (Note 2)

Anode 2 Voltage (Note 3)	22000 max. Volts
Grid 2 Voltage	2500 max. Volts
Grid 1 Voltage:	
Negative Bias Value	180 max. Volts
Positive Bias Value	0 max. Volts
Positive Peak Value	0 max. Volts
Peak Heater-Cathode Voltage:	
Heater Negative with respect to Cathode:	
During Warm-up Period of 15 Second maximum	410 max. Volts
After Equipment Warm-up Period	180 max. Volts
Heater Positive with respect to Cathode:	
Peak	180 max. Volts
D C	0 max. Volts
Anode 2 Dissipation (mean)	6 max. Watts

Limiting Circuit Values

Grid 1 Circuit Resistance	1.5 max. Megohms
Grid 2 Circuit Resistance (Approx.)	0.5 Megohms

Typical Operating Conditions (Note 2)

Anode 2 Voltage (Note 3)	20000 Volts
Grid 2 Voltage	2000 Volts
Grid 1 Spot Cut-off Voltage	−35 to −80 Volts
Maximum Linewidth "A" with P11 (Note 4)	0.0015 Inch
Spot Position (Note 5)	2 mm
Focus Coil Current (Note 6)	73 mA

Notes

1. Westinghouse Military & Industrial Cathode Ray Tubes can be supplied with most of the standard JEDEC phosphors.
2. All voltages are specified relative to the cathode. Tube must be operated with Anode 2 at ground.
3. Operation with voltage in excess of 16KV may require shielding to limit radiation of very soft X-rays.
4. Line width is defined as the distance between the half-amplitude points of the light-energy distribution of the line and is measured with a peak current of 1 microampere, using the slit-scan technique described in Westinghouse reprint #5510. Line width with other phosphors may vary slightly. Dynamic focus modulation is necessary to maintain optimum resolution over entire face. Close control of supply regulation and ripple is necessary to ensure optimum focus. Typically, a 0.1% change in anode voltage, from best value, will increase spot size approximately 10%.
5. With the tube shielded against external magnetic fields, the undeflected focused spot lies within a circle of 2mm radius concentric with the faceplate.
6. Current in JEDEC Focus Coil No. 122 for optimum focus with anode current of 1 microampere.

★ The WX-number identifies a specific laboratory design; the design and, consequently, the data and type number are subject to change. No obligations are assumed to manufacture this particular device in the future unless otherwise arranged. These drawings and specifications are the property of Westinghouse Electric Corporation, Electronic Tube Division, and shall not be reproduced or copied or used as the basis for the manufacture or sale of apparatus and/or devices without permission.

May 1969
Supersedes TD 86-738 Page 1 dated April 1968
S6–8E–9E, TC–2236

Industrial & Military CRT

Type: WX-30733P-

Magnetic Focus & Deflection
Line Width = 0.0015″
0.2″ x 8″ Fiber-Optic Faceplate

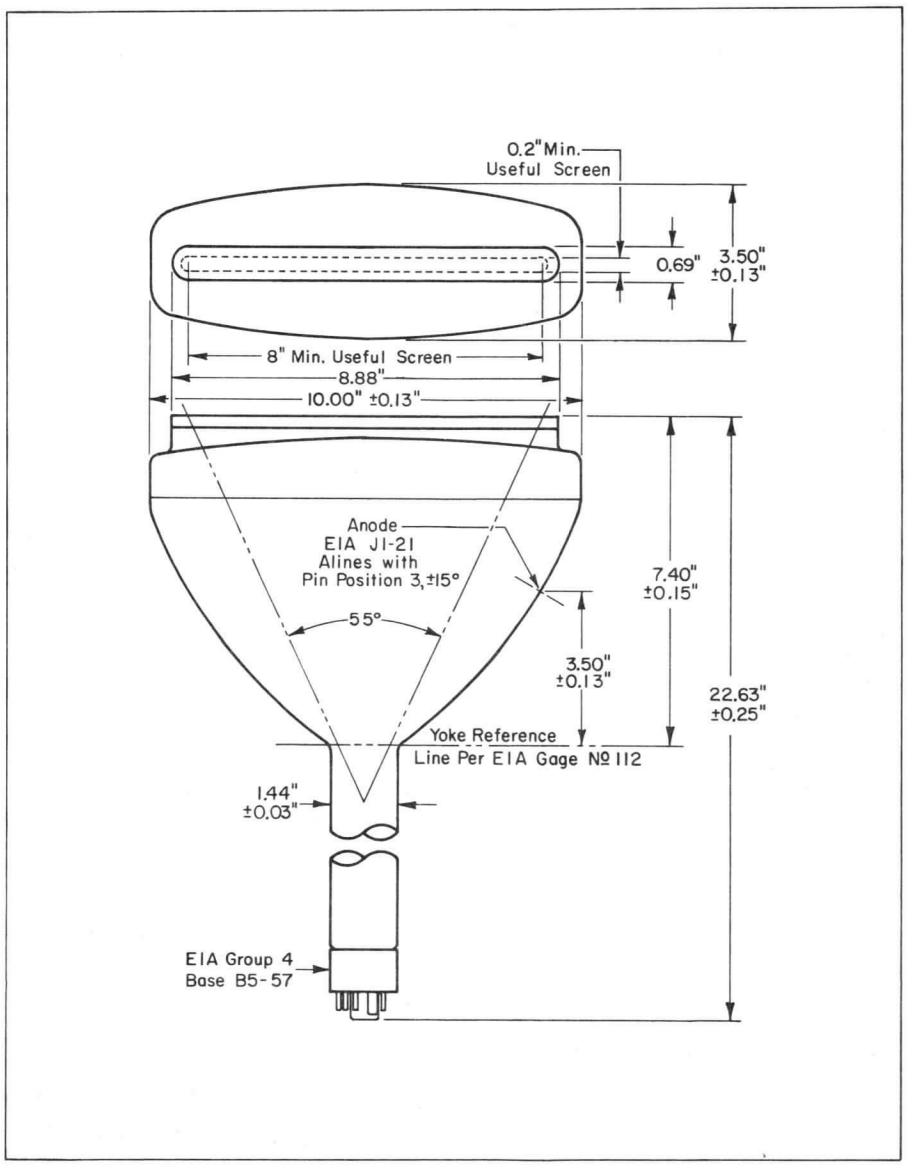

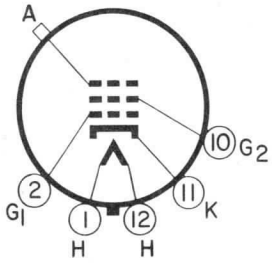

Westinghouse Electric Corporation
Electronic Tube Division, Elmira, N. Y. 14902
Printed in U. S. A.

Industrial & Military CRT

Westinghouse

Type: WX-30734P-★

Magnetic Focus & Deflection
0.002″Line Width
10″ Round Flat Faceplate

Basic Characteristics
10″ Round Flat Faceplate
Magnetic Focus
50° Magnetic Deflection
Aluminized

Special Features
0.002″ Line Width

Typical Applications
Data Display

Electrical

Cathode	Coated Unipotential
Heater:	
Voltage	6.3 Volts
Current	0.6 Ampere
Direct Interelectrode Capacitances:	
Grid 1 to All Other Electrodes	6 pF
Cathode to All Other Electrodes	5 pF
Focusing Method	Magnetic
Deflection	50° Magnetic

Optical

Screen Phosphor (Aluminized)	Note 1
Faceplate:	
Configuration	Flat
Glass	Clear, Non-Browning
Transmission	90%
Index of Refraction	1.52

Mechanical

Mounting Position	Any
Net Weight (Approx.)	9.5 Pounds

Absolute Maximum Ratings

Anode Voltage (Note 2)	25000 max. Volts
Grid 2 Voltage	2200 max. Volts
Grid 1 Voltage:	
Negative Bias Value	180 max. Volts
Positive Bias Value	0 max. Volts
Peak Heater-Cathode Voltage:	
Heater Negative with respect to Cathode:	
During Warm-up Period of 15 Seconds maximum	410 max. Volts
After Equipment Warm-up Period	180 max. Volts
Heater Positive with respect to Cathode:	
Peak	180 max. Volts
DC	0 max. Volts

Limiting Circuit Values

Grid 1 Circuit Resistance	1.5 max. Megohms
Grid 2 Circuit Resistance	0.5 approx. Megohms

Typical Operating Conditions

Anode Voltage	20000 Volts
Grid 2 Voltage	2000 Volts
Grid 1 Spot Cut-off Voltage	−33 to −77 Volts
Maximum Linewidth "A" with P11 (Note 3)	0.002 Inch
Spot Position (Note 4)	10 mm

Notes

1. Westinghouse Military & Industrial Cathode Ray Tubes can be supplied with most of the standard JEDEC phosphors.
2. Operation with voltage in excess of 16KV may require shielding to limit radiation of very soft X-rays.
3. Line width is defined as the distance between the half-amplitude points of the light-energy distribution of the line and is measured with a peak current of 5 microamperes, using the slit-scan technique described in Westinghouse reprint No. 5510. Line width with other phosphors may vary slightly. Dynamic focus modulation is necessary to maintain optimum resolution over entire face. Close control of supply regulation and ripple is necessary to ensure optimum focus.
4. With the tube shielded against external magnetic fields, the undeflected focused spot lies within a circle of 10 mm radius concentric with the faceplate.

★ The WX-number identifies a specific laboratory design; the design and, consequently, the data and type number are subject to change. No obligations are assumed to manufacture this particular device in the future unless otherwise arranged. These drawings and specifications are the property of Westinghouse Electric Corporation, Electronic Tube Division, and shall not be reproduced or copied or used as the basis for the manufacture or sale of apparatus and/or devices without permission.

May 1969
Supersedes TD 86-738 Page 11,
dated March 1868
S6–8E–9E, TC–2236

Industrial & Military CRT

Type: WX-30734P-

Magnetic Focus & Deflection
0.002″Line Width
10″ Round Flat Faceplate

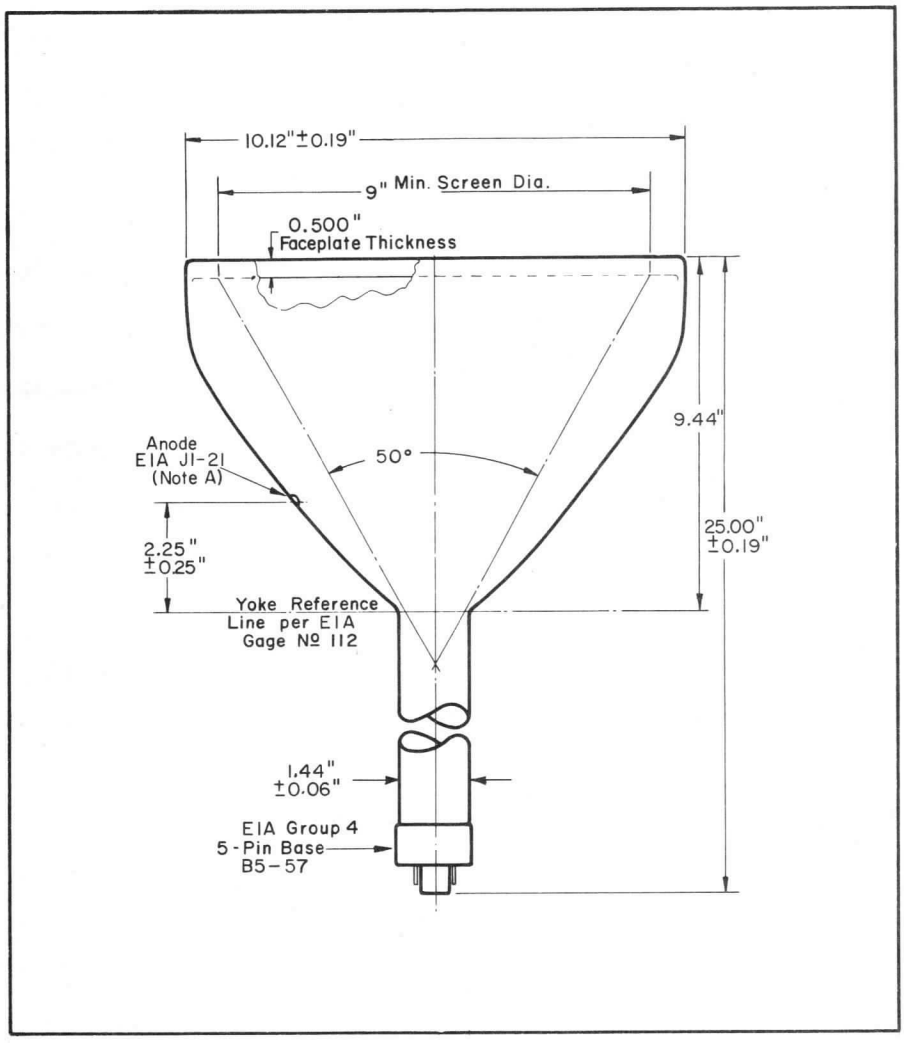

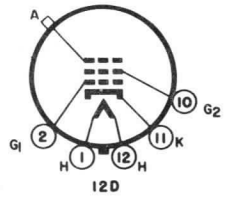

Outline Notes

1. The plane defined by the tube axis and pin position 3 alines with the plane defined by the tube axis and the anode.

Westinghouse Electric Corporation
Electronic Tube Division, Elmira, N. Y. 14902
Printed in U. S. A.

Industrial & Military CRT

Westinghouse

Electrostatic Focus & Deflection

Type: WX-30764
Line Width = 0.015″
Post Deflection Acceleration

Basic Characteristics

5.5″ x 4.5″ Glass Faceplate
Electrostatic Focus & Deflection
Single-Band Post-Deflection Acceleration
Aluminized Screen

Typical Applications

Oscillographic
Alpha-Numeric Data Display

Special Features

High Deflection Sensitivity
High Brightness
0.015″ Center Spot Size

Electrical

Cathode	Coated Unipotential
Heater:	
Voltage	6.3 Volts
Current	0.600 Ampere
Direct Interelectrode Capacitances:	
Grid 1 to All Other Electrodes	7.0 pF
Cathode to All Other Electrodes	5.0 pF
D1 to D2	4.5 pF
D3 to D4	2.0 pF
D1 to All Other Electrodes	9.5 pF
D2 to All Other Electrodes	9.5 pF
D3 to All Other Electrodes	6.5 pF
D4 to All Other Electrodes	6.5 pF
Focusing Method	Electrostatic
Deflection	Electrostatic

Optical

Screen Phosphor	Note 1
Faceplate:	
Configuration	Spherical
Glass	Clear

Mechanical

Mounting Position	Any
Net Weight	3.5 Pounds

Absolute Maximum Ratings

Anode 3 Voltage	9000 max. Volts
Anode 2 Voltage	4500 max. Volts
Anode 1 (Focus) Voltage	1500 max. Volts
Grid 1 Voltage:	
Negative Bias Value	180 max. Volts
Positive Bias Value	0 max. Volts
Positive Peak Value	0 max. Volts
Peak Heater-Cathode Voltage:	
Heater Negative with respect to Cathode:	
During Warm-up period of 15 sec. max.	410 max. Volts
After Equipment Warm-up period	180 max. Volts
Heater Positive with respect to Cathode:	
Peak	180 max. Volts
DC	25 max. Volts
Peak Voltage Between Anode 2 and Any Deflection Electrode	500 max. Volts
Anode 2 Dissipation (mean)	6 max. Watts

Limiting Circuit Values

Grid 1 Circuit Resistance	1.5 max. Megohms
Resistance in Any Deflection Electrode Circuit (Note 2)	1.0 max. Megohms

Typical Operating Conditions

Anode 3 Voltage	8000 Volts
Anode 2 Voltage (Note 3)	4000 to 4100 Volts
Anode 1 (Focus) Voltage	150 to 550 Volts
Anode 1 (Focus) Current	−15 to +15 μA
Grid 1 Spot Cut-off Voltage	−45 to −90 Volts
Minimum Light Output with P31 (Note 4)	300 Ft-L
Maximum Modulation (Note 5)	40 Volts
Maximum Linewidth "A" with P31 (Note 5)	0.015 Inch
Maximum Linewidth (Edges) (Note 5)	0.024 Inch
Deflection Factors:	
D1 D2	110 to 130 Volts/Inch
D3 D4	75 to 95 Volts/Inch
Deflection Factor Uniformity (Note 6)	2 %
Pattern Distortion	See Note 7
Spot Position (Note 8)	0.55 Inch
Useful Scan:	
D1 D2	Full Screen
D3 D4	4.5 Inches Min.

Notes

1. Westinghouse Military & Industrial Cathode Ray Tubes can be supplied with most of the standard JEDEC phosphors.
2. It is recommended that the deflecting-electrode-circuit resistances be approximately equal.
3. Astigmatism correction is achieved by varying the Anode 2 voltage (within the indicated range) with respect to the mean potential of the deflector plates (4000v).
4. Measured in accordance with Mil-E-1 specification (2″ x 2″ raster) at an Anode 3 current of 50 microamperse.
5. Measured in accordance with Mil-E-1 specification at an Anode 3 current of 50 microamperes.
6. The deflection factor (for both D1 D2 and D3 D4 plate pairs separately) for any deflection of less than 75% of the useful scan will not differ from the deflection factor at 25% of the useful scan by more than the indicated amount.
7. With deflection voltages balanced about Anode 2 voltages, all portions of a raster pattern, adjusted so that irs widest points touch the sides of a 4.000 x 3.000 inch rectangle, will fall within the area bounded by said rectangle and an inscribed 3.880 x 2.880 inch rectangle.
8. With deflecting electrodes connected to Anode 2 and with the tube shielded against external magnetic fields, the focused spot is within a square of specified side centered on the tube face and with sides parallel to scanning axes.

June 1968
New Information
S6−2C−11C, S5−10A,WI−1300

Industrial & Military CRT

Electrostatic Focus & Deflection

Type: WX-30764
Line Width = 0.015"
Post Deflection Acceleration

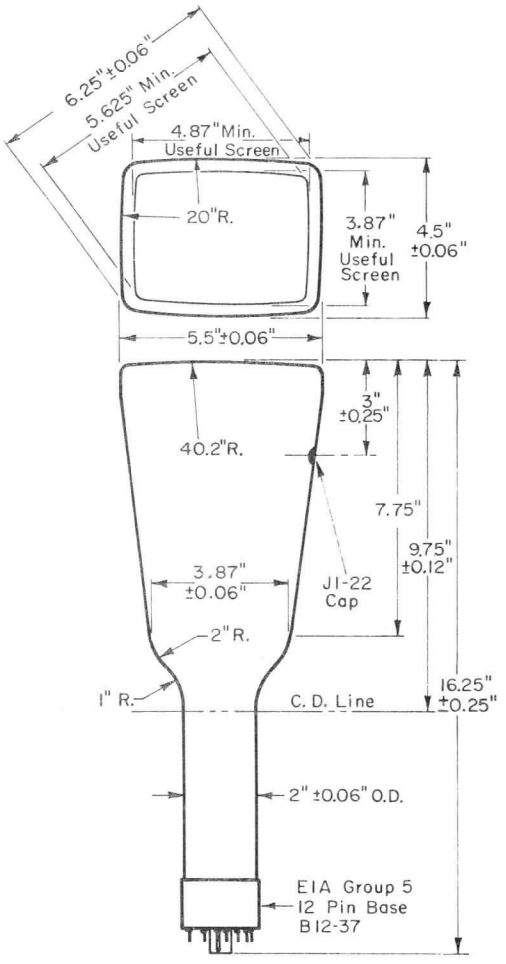

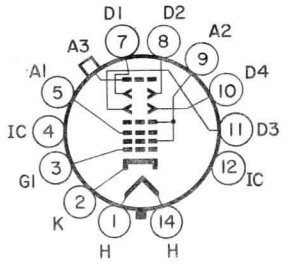

WX-30764

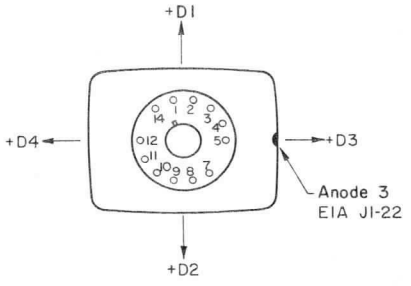

Outline Notes

1. Plane defined by pin 5 and tube axis alines with major axis of face ±10°.
2. D3 D4 trace alines major axis of face ±2°.
3. Angle between D1 D2 trace and D3 D4 trace is 90° ± 1°.

Westinghouse Electric Corporation
Electronic Tube Division, Elmira, N. Y. 14902
Printed in U. S. A.

Westinghouse

Type: WX-30772P-★

Magnetic Deflection, ES Focus
Double Axis Auxiliary Deflection
Line Width = 0.012″
12″ Round Spherical Faceplate

Basic Characteristics
12″ Round Faceplate
55° Magnetic Deflection
Electrostatic Focus
Aluminized

Typical Applications
Radar

Special Features
Double Axis Auxiliary Deflection
Line Width = 0.012″

Electrical

Cathode	Coated Unipotential
Heater:	
Voltage	6.3 Volts
Current	0.6 Ampere
Direct Interelectrode Capacitances:	
Grid 1 to All Other Electrodes	10 pF
Grid 2 to All Other Electrodes	9 pF
Cathode to All Other Electrodes	7 pF
D1 to D2	2 pF
D3 to D4	2 pF
D1 to All Other Electrodes	6 pF
D2 to All Other Electrodes	6 pF
D3 to All Other Electrodes	6 pF
D4 to All Other Electrodes	6 pF
Focusing Method	Electrostatic
Deflection	55° Magnetic
Micro-Deflection	Electrostatic

Optical

Screen Phosphor	Note 1
Faceplate:	
Configuration	Spherical
Glass	Clear
Transmission	74%

Mechanical

Mounting Position	Any
Net Weight	12 Pounds

Absolute Maximum Ratings

Anode 2 Voltage (Note 2)	20000 max.	Volts
Anode 1 (Focus) Voltage	4000 max.	Volts
Grid 2 Voltage	600 max.	Volts
Grid 1 Voltage:		
Negative Bias Value	180 max.	Volts
Positive Bias Value	0 max.	Volts
Positive Peak Value	0 max.	Volts
Heater-Cathode Voltage:		
Heater Negative with respect to Cathode:		
During Warm-up Period of 15 seconds max.	410 max.	Volts
After Equipment Warm-up Period	180 max.	Volts
Heater Positive with respect to Cathode:		
Peak	180 max.	Volts
DC	0 max.	Volts

Limiting Circuit Values

Grid 1 Circuit Resistance	1.5 max.	Megohms
Grid 2 Circuit Resistance	See Note 3	
Focus Electrode Circuit Resistance	10000 min.	Ohms

Typical Operating Conditions

Anode 2 Voltage	15000	Volts
Anode 1 (Focus) Voltage (Note 4)	2600 to 3000	Volts
Grid 2 Voltage	300	Volts
Grid 1 Spot Cutoff Voltage	−35 to −70	Volts
Maximum Line Width "A" with P7 (Note 5)	0.012	Inch
Auxiliary Deflection Factors (Note 6) Approx.	400	Volts/Inch
Spot Position (Note 7)	8	mm

Notes

1. Westinghouse Military & Industrial Cathode Ray Tubes can be supplied with most of the standard JEDEC phosphors.
2. Operation with voltage in excess of 16KV may require shielding to limit radiation of very soft X-rays.
3. A grid 2 circuit resistance of approximately 0.5 megohm should be provided. In addition it is recommended that a suitable device be used to limit grid 2 voltage to the maximum rated value to prevent tube damage in case of a momentary arc.
4. The grid 3 electrode may draw a peak current of 2 millamperes with a representative value of 500 microamperes under normal operation.
5. Line width is measured by the shrinking raster method with a peak current of 50 microamperes. Line width with other phosphors may vary slightly. Dynamic focus modulation is necessary to maintain optimum resolution over entire face. Close control of supply regulation and ripple is necessary to ensure optimum focus. Typically, a 0.1% change in focus or anode voltage, from best value, will increase spot size approximately 10%.
6. A D.C. plate-to-plate voltage of 100 volts will deflect the spot 0.25″ ±0.02″ from its undeflected position along either deflection axis. Deflection voltage must be balanced around the center focus voltage with the center value of deflection voltage well clamped to the focus voltage. Deflection greater than 0.37″ may result in excessive spot distortion.
7. With the tube shielded against external magnetic fields, the undeflected focused spot lies within a circle of 8 mm radius concentric with the faceplate.

December 1968
New Information
S6–2C–11C, S5–10A, WI–1300

Industrial & Military CRT

Type: WX-30772P-★

Magnetic Deflection, ES Focus
Double Axis Auxiliary Deflection
Line Width = 0.012″
12″ Round Spherical Faceplate

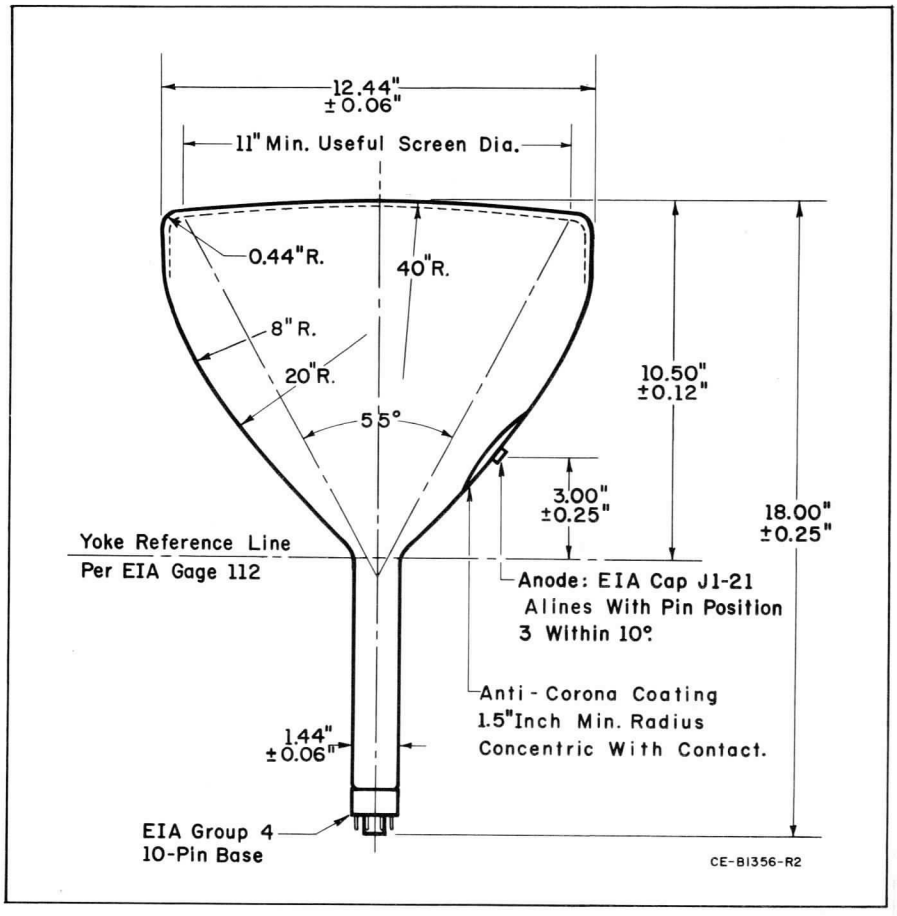

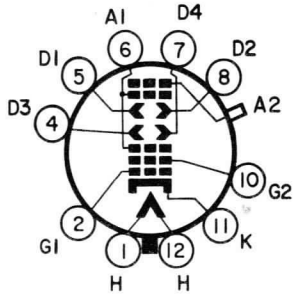

IOT

★ The WX-number identifies a specific laboratory design; the design and, consequently, the data and type number are subject to change. No obligations are assumed to manufacture this particular device in the future unless otherwise arranged. These drawings and specifications are the property of Westinghouse Electric Corporation, Electronic Tube Division, and shall not be reproduced or copied or used as the basis for the manufacture or sale of apparatus and/or devices without permission.

Westinghouse Electric Corporation
Electronic Tube Division, Elmira, N.Y. 14902
Printed in U.S.A.

Industrial & Military CRT

Westinghouse

Type: WX-30838P-★

High Voltage Focus, Magnetic Deflection
Rear Window
Radar Display
Double Axis Auxiliary Deflection
Line Width = 0.012″

Basic Characteristics
12″ Round Spherical Faceplate
55° Magnetic Deflection
High Voltage Focus
Non Aluminized

Typical Applications
Radar

Special Features
Line Width = 0.012″
Double Axis Auxiliary Deflection
Rear Window

Electrical

Cathode	Coated Unipotential
Heater:	
Voltage	6.3 Volts
Current	0.6 Ampere
Direct Interelectrode Capacitances:	
Grid 1 to All Other Electrodes	10 pF
Grid 2 to All Other Electrodes	9 pF
Cathode to All Other Electrodes	7 pF
D1 to D2	2 pF
D3 to D4	2 pF
D1 to All Other Electrodes	6 pF
D2 to All Other Electrodes	6 pF
D3 to All Other Electrodes	6 pF
D4 to All Other Electrodes	6 pF
Focusing Method	Electrostatic
Deflection	55° Magnetic
Micro Deflection	Electrostatic

Optical

Screen Phosphor	Note 1
Faceplate:	
Configuration	Spherical
Glass	Neutral Density
Transmission	74%
Rear Window: (Note 2)	
Configuration	Flat
Glass	Optical

Mechanical

Mounting Position	Any

Absolute Maximum Ratings

Anode 2 Voltage (Note 3)	20000 max.	Volts
Anode 1 (Focus) Voltage	4000 max.	Volts
Grid 2 Voltage	600 max.	Volts
Grid 1 Voltage:		
Negative Bias Value	180 max.	Volts
Positive Bias Value	0 max.	Volts
Positive Peak Value	0 max.	Volts
Peak Heater-Cathode Voltage:		
Heater Negative with respect to Cathode:		
During Warm-up Period of 15 sec. max.	410 max.	Volts
After Equipment Warm-up Period	180 max.	Volts
Heater Positive with respect to Cathode:		
Peak	180 max.	Volts
DC	0 max.	Volts

Limiting Circuit Values

Grid 1 Circuit Resistance	1.5 max.	Megohms
Grid 2 Circuit Resistance	See Note 4	
Focus Electrode Circuit Resistance	10000 min.	Ohms

Typical Operating Conditions

Anode 2 Voltage (Note 3)	15000	Volts
Anode 1 (Focus) Voltage (Note 5)	2700 to 3000	Volts
Grid 2 Voltage	300	Volts
Grid 1 Spot Cutoff Voltage	−35 to −70	Volts
Maximum Line Width "A" with P7 (Note 6)	0.012	Inch
Deflection Factors (Note 7) Approx.	400	Volts/Inch
Spot Position (Note 8)	8	mm

Notes

1. Westinghouse Military & Industrial Cathode Ray Tubes can be supplied with most of the standard JEDEC phosphors.
2. The rear window is a ground and polished opthalmic disc 2.960″ ± 0.010″ in diameter and 0.375″ ± 0.005″ thick.
3. Operation with voltage in excess of 16KV may require shielding to limit radiation of very soft X-rays.
4. A grid 2 circuit resistance of approximately 0.5 megohm should be provided. In addition it is recommended that a suitable device be used to limit grid 2 voltage to the maximum rated value to prevent tube damage in case of a momentary arc.
5. The grid 3 electrode may draw a peak current of 2 milliamperes with a representative value of 300 microamperes under normal operation.
6. Line width is measured by the shrinking raster method with a peak current of 50 microamperes. Line width with other phosphors may vary slightly. Dynamic focus modulation is necessary to maintain optimum resolution over entire face. Close control of supply regulation and ripple is necessary to ensure optimum focus. Typically, a 0.1% change in focus or anode voltage, from best value, will increase spot size approximately 10%.
7. A DC plate-to-plate voltage of 100 volts will deflect the spot 0.25″ ± 0.02″ from its undeflected position along either deflection axis. Deflection voltage must be balanced around the center focus voltage with the center value of deflection voltage well clamped to the focus voltage. Deflection greater than 0.37″ may result in excessive spot distortion.
8. With the tube shielded against external magnetic fields, the undeflected focused spot lies within a circle of 8 mm radius concentric with the faceplate.

December 1968
New Information
S6−2C−11C, S5−10A, WI−1300

Industrial & Military CRT

Type: WX-30838P-★

High Voltage Focus, Magnetic Deflection
Rear Window
Radar Display
Double Axis Auxiliary Deflection
Line Width = 0.012″

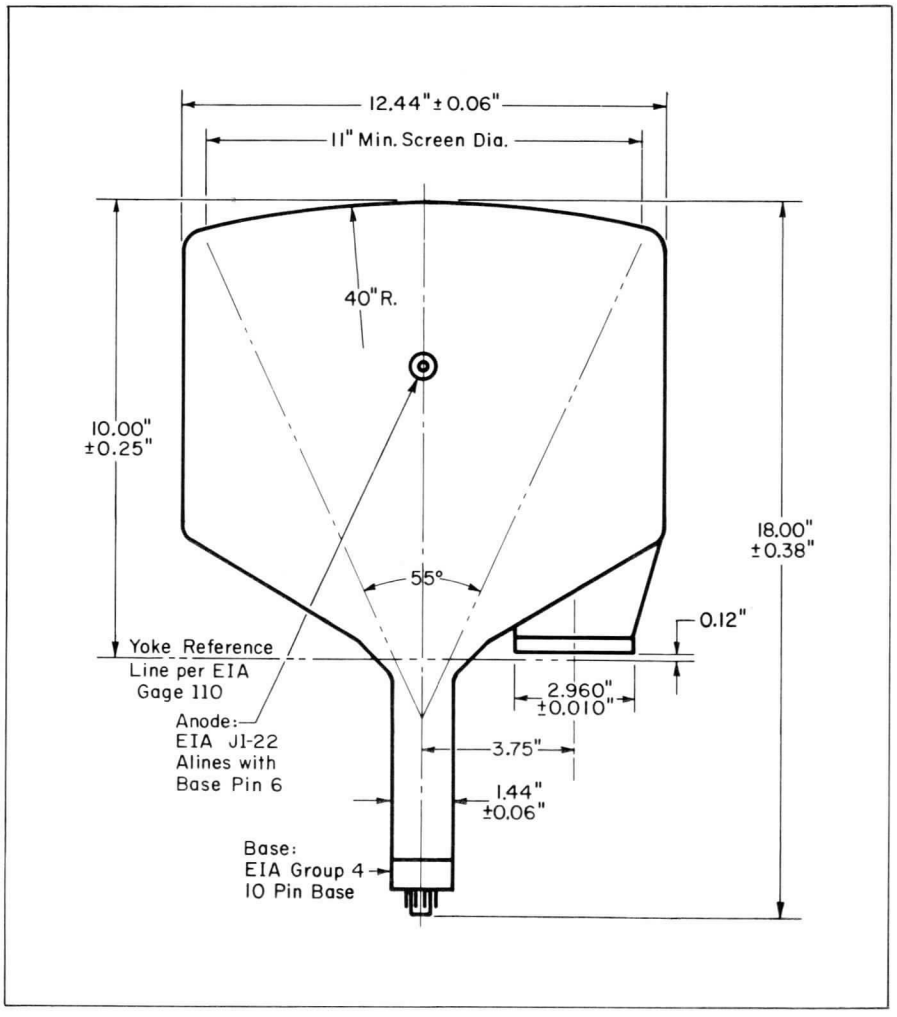

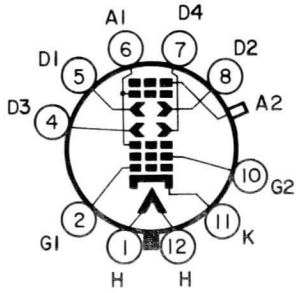

★ The WX-number identifies a specific laboratory design; the design and, consequently, the data and type number are subject to change. No obligations are assumed to manufacture this particular device in the future unless otherwise arranged. These drawings and specifications are the property of Westinghouse Electric Corporation, Electronic Tube Division, and shall not be reproduced or copied or used as the basis for the manufacture or sale of apparatus and/or devices without permission.

Westinghouse Electric Corporation
Electronic Tube Division, Elmira, N.Y. 14902
Printed in U.S.A.

Westinghouse

Industrial & Military CRT

Type: WX-30844P-★

Low-Voltage Focus, Magnetic Deflection
Compact Monitor Tube
Line Width = 0.008″

Basic Characteristics

4½″ x 5½″ Rectangular
Low Voltage Focus
90° Magnetic Deflection
Aluminized

Typical Applications

Computer Readout
Monitor

Special Features

Compact
0.008″ Line Width

Electrical

Cathode	Coated Unipotential
Heater:	
Voltage	6.3 Volts
Current	0.6 Ampere
Direct Interelectrode Capacitances:	
Grid 1 to All Other Electrodes	9 pF
Grid 2 to All Other Electrodes	7 pF
Cathode to All Other Electrodes	7 pF
Focusing Method	Electrostatic
Deflection	90° Magnetic

Optical

Screen Phosphor	Note 1
Faceplate:	
Configuration	Spherical
Glass	Clear
Transmission	92%

Mechanical

Mounting Position	Any
Net Weight	1.5 Pounds

Absolute Maximum Ratings

Anode Voltage	15000 max. Volts
Grid 4 (Focus) Voltage	800 max. Volts
Grid 2 Voltage	600 max. Volts
Grid 1 Voltage:	
Negative Bias Value	180 max. Volts
Positive Bias Value	0 max. Volts
Positive Peak Value	0 max. Volts
Peak Heater-Cathode Voltage:	
Heater Negative with respect to Cathode:	
During Warm-up Period of 15 sec. max.	410 max. Volts
After Equipment Warm-up Period	180 max. Volts
Heater Positive with respect to Cathode:	
Peak	180 max. Volts
DC	0 max. Volts

Limiting Circuit Values

Grid 1 Circuit Resistance	1.5 max. Megohms
Grid 2 Circuit Resistance	See Note 2
Focus Electrode Circuit Resistance	10000 min. Ohms

Typical Operating Conditions

Anode Voltage	9000 Volts
Grid 4 (Focus) Voltage	0 to 300 Volts
Grid 2 Voltage	300 Volts
Grid 1 Spot Cut-off Voltage	−10 to −30 Volts
Maximum Line Width "A" with P4 (Note 3)	0.008 Inch
Spot Position (Note 4)	8 mm

Notes

1. Westinghouse Military & Industrial Cathode Ray Tubes can be supplied with most of the standard JEDEC phosphors.
2. A grid 2 circuit resistance of approximately 0.5 megohm should be provided.
3. Line width is measured by the shrinking raster method with a peak current of 100 microamperes. Line width with other phosphors may vary slightly.
4. With the tube shielded against external magnetic fields, the undeflected focused spot lies within a circle of 8 mm radius concentric with the faceplate.

★ The WX-number identifies a specific laboratory design; the design and, consequently, the data and type number are subject to change. No obligations are assumed to manufacture this particular device in the future unless otherwise arranged. These drawings and specifications are the property of Westinghouse Electric Corporation, Electronic Tube Division, and shall not be reproduced or copied or used as the basis for the manufacture or sale of apparatus and/or devices without permission.

November 1968
New Information
S6–2C–11C, S5–10A, WI–1300

Industrial & Military CRT

Type: WX-30844P-

Low-Voltage Focus, Magnetic Deflection
Compact Monitor Tube
Line Width = 0.008″

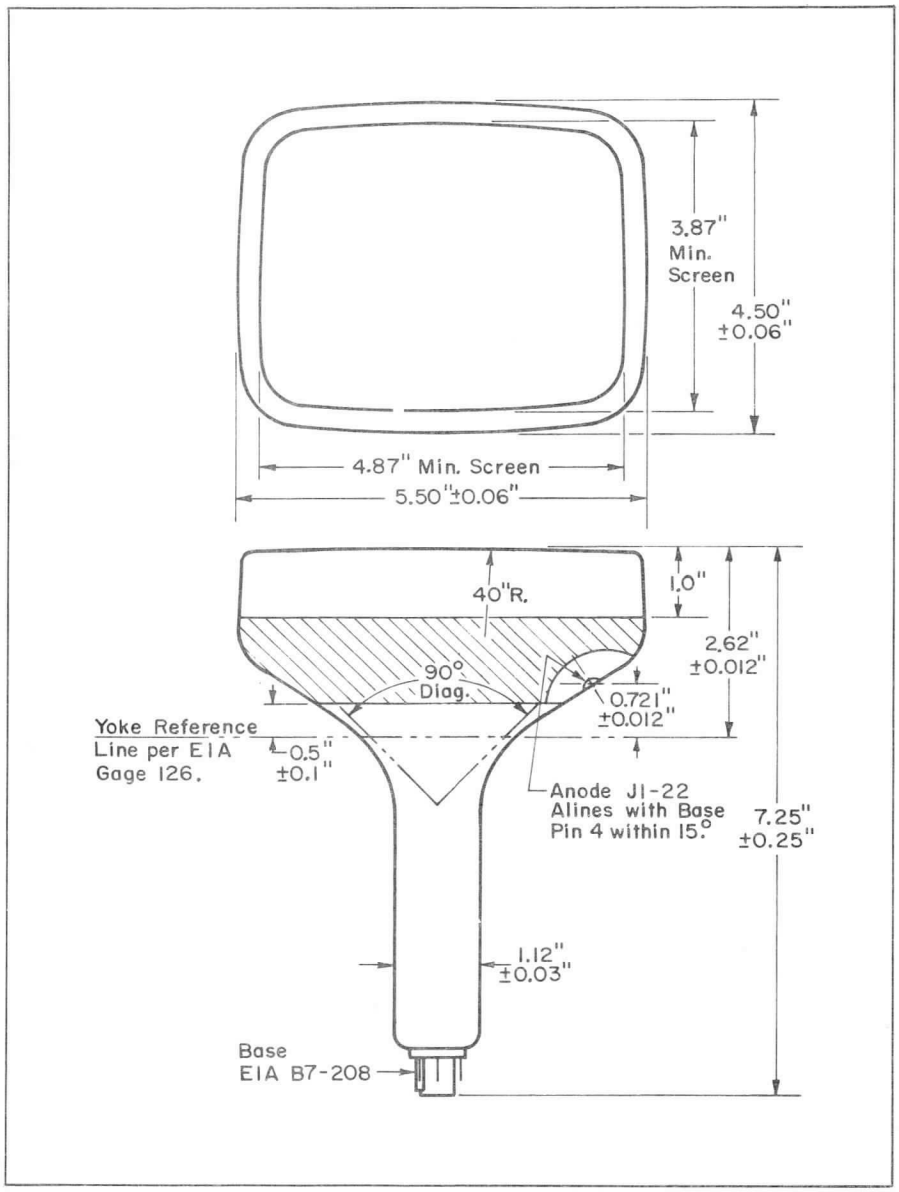

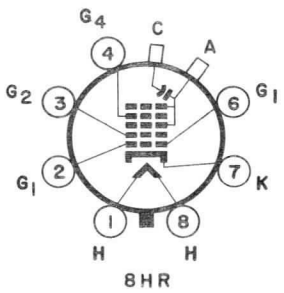

8HR

Westinghouse Electric Corporation
Electronic Tube Division, Elmira, N. Y. 14902
Printed in U.S.A.

Westinghouse

Industrial & Military CRT Ruggedized Tube - Yoke - Shield Assembly

Magnetic Deflection, ES Focus

Type: WX-30851P11
Spot Diameter = 0.00045″
3″ Diameter Flat Faceplate

Basic Characteristics

40° Magnetic Deflection
Electrostatic Focus
3″ Flat Faceplate

Typical Applications

Aerial Photographic Recording
Single Line Scan Display

Special Features

Spot Diameter = 0.00045″
Reduced Deflection Defocusing

Electrical

Cathode	Coated Unipotential
Heater:	
Voltage	6.3 Volts
Current	0.60 Ampere
Direct Interelectrode Capacitances:	
Grid 1 to All Other Electrodes	24 pF
Cathode to All Other Electrodes	17 pF
Focusing Method	Electrostatic
Deflection	40° Magnetic
Yoke Characteristics: Single-End Operation	
Vertical Inductance	10 ± 10% mH
Vertical Resistance	12 ± 10% Ohms
Horizontal Inductance	75 ± 10% μH
Horizontal Resistance	0.27 ± 10% Ohms

Optical

Screen Phosphor (Note 1)	P11
Faceplate:	
Configuration (Note 2)	Flat
Glass	Clear
Transmission	90%
Index of Refraction	1.506

Mechanical

Mounting Position	Any
Net Weight	11.25 Pounds

Grounded Anode Operation

Absolute Maximum Ratings

Voltages Referenced to Cathode

Anode Voltage (Note 3)	18000 max. Volts
Grid 3 (Focus) Voltage (Note 4)	5000 max. Volts
Grid 2 Voltage	600 max. Volts
Grid 1 Voltage:	
Negative Bias Value	180 max. Volts
Positive Bias Value	0 max. Volts
Positive Peak Value	0 max. Volts
Heater-Cathode Voltage:	
Heater Negative with respect to Cathode:	
During Warm-up period of 15 sec. max.	410 max. Volts
After Equipment warm-up period	180 max. Volts
Heater Positive with respect to Cathode:	
Peak	50 max. Volts
D. C.	25 max. Volts

Limiting Circuit Values

Grid 1 Circuit Resistance	1.5 max. Megohms
Grid 2 Circuit Resistance	See Note 5

Typical Operating Conditions

Voltages Referenced to Cathode

Anode Voltage (Note 3)	15000 Volts
Grid 3 (Focus) Voltage (Note 4)	2960 to 3560 Volts
Grid 2 Voltage	500 Volts
Grid 1 Spot Cutoff Voltage	−40 to −65 Volts
Maximum Spot Diameter for P11: (Note 6)	
Center	0.00045 Inch
Edge	0.0005 Inch
Deflection Sensitivity:	
Vertical	0.2 Amperes/Inch
Horizontal	2.25 Amperes/Inch

Environmental Capability

The WX-30851P11 will withstand, without damage, vibration at 20 G from 55 to 500 Hertz and will operate without degradation of performance while subjected to vibration at 0.23″ double amplitude up to 25 Hertz and at 5 G from 25 to 500 Hertz.

Notes

1. Westinghouse Military & Industrial Cathode Ray Tubes can be supplied with most of the standard JEDEC phosphors.
2. Maximum deviation from flatness is 0.001 within a circle of 2″ diameter centered on the tube axis. Faceplate tilt relative to the tube axis is 0.3° maximum.
3. Operation with voltage in excess of 16KV may require shielding to limit radiation of very soft X-rays.
4. The grid 3 electrode may draw a peak current of 2 milliamperes with a representative value of 300 microamperes under normal operation.
5. A grid 2 circuit resistance of approximately 0.5 megohms should be provided. In addition it is recommended that a suitable device be used to limit grid 2 voltage to the maximum rated value to prevent tube damage in case of a momentary arc.
6. Line width is defined as the distance between the half-amplitude points of the light-energy distribution of the line and is measured with a peak current of 0.5 microampere, using the slit-scan technique described in Westinghouse reprint #5510. Line width with other phosphors may vary slightly. Dynamic focus modulation is necessary to maintain optimum resolution over entire face. Close control of supply regulation and ripple is necessary to ensure optimum focus. Typically, a 0.1% change in focus or anode voltage, from best value, will increase spot size approximately 10%.

March 1968
New Information
S6–2C–11C, S5–10A, WI–1300

Industrial & Military CRT Ruggedized Tube - Yoke - Shield Assembly

Magnetic Deflection, ES Focus

Type: WX-30851P11
Spot Diameter = 0.00045″
3″ Diameter Flat Faceplate

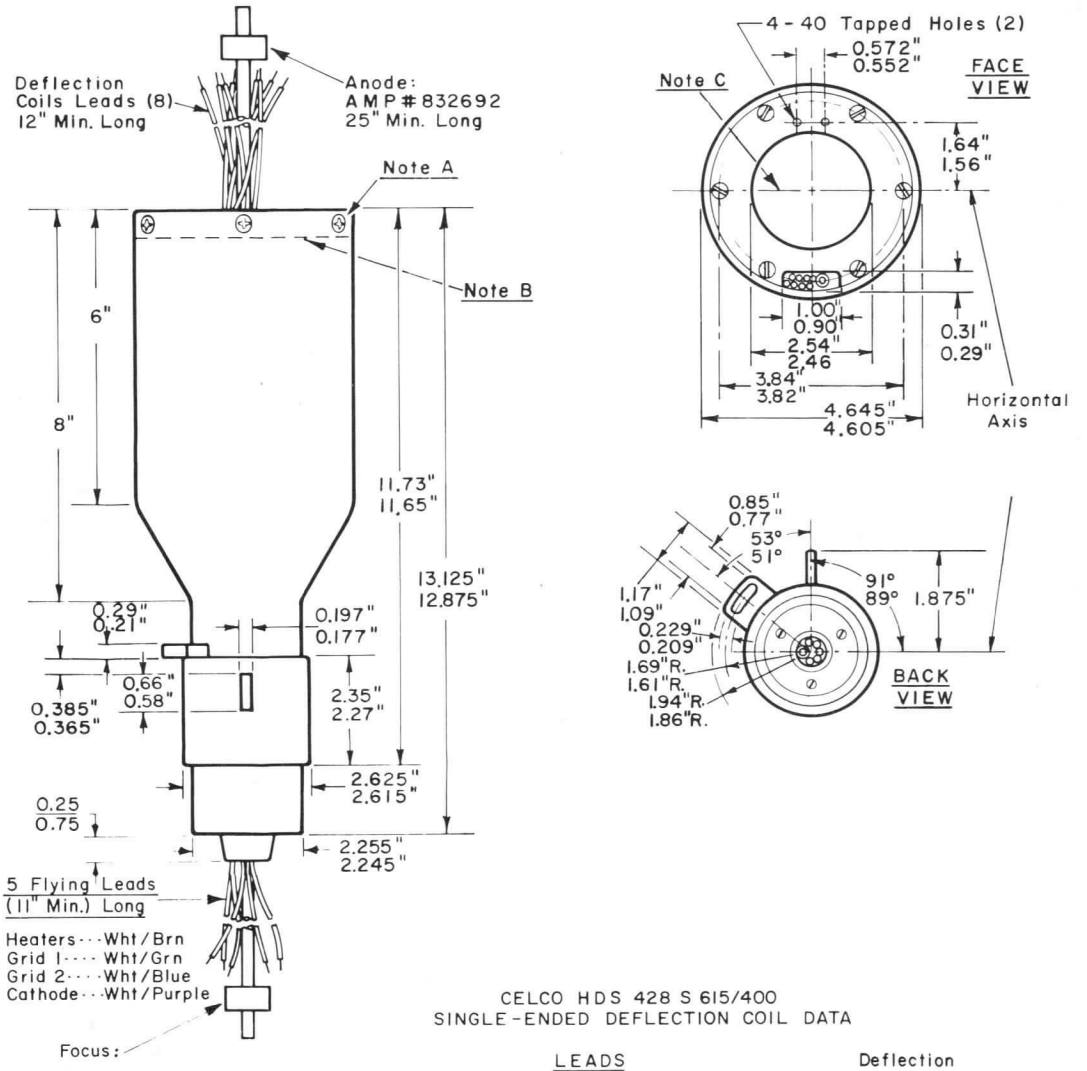

CELCO HDS 428 S 615/400
SINGLE-ENDED DEFLECTION COIL DATA

(+Plus)	LEADS Connect	(− Negative)	Deflection Direction Facing CRT
Blue	White-Red	Brown	Up
Green	Black-Orange	Yellow	Left

CE-R-2524

Outline Notes

A. Mounting screws are recessed below periphery.

B. Front surface of faceplate is 0.445″ minimum, 0.465″ maximum from front of tube housing.

C. Horizontal trace alinement with plane defined by the key and the tube axis is 90° ± 5°.

Westinghouse Electric Corporation
Electronic Tube Division, Elmira, N. Y. 14902
Printed in U. S. A.

Westinghouse

Industrial & Military CRT

12", 110° Magnetic Deflection, ES Focus

Type: WL-30886
Etched Laminated Safety Panel
Integral Mounting Shell
Line Width = 0.015"

Basic Characteristics
12" Rectangular
110° Magnetic Deflection
Low Voltage ES Focus

Typical Applications
Monitor

Special Features
Implosion Protection with Integral Mounting Shell and Etched Laminated Safety Panel

Electrical

Cathode	Coated Unipotential
Heater:	
Voltage	6.3 Volts
Current	0.45 Ampere
Direct Interelectrode Capacitances:	
Grid 1 to All Other Electrodes	6 pF
Cathode to All Other Electrodes	5 pF
Focusing Method	Electrostatic
Deflection	110° Magnetic

Optical

Screen Phosphor	Note 1
Faceplate:	
Configuration	Spherical
Transmission	48%
Safety Panel:	
Configuration	Spherical
Transmission	31%
Overall Transmission (Approx.)	16%

Mechanical

Mounting Position	Any
Net Weight (Approx.)	7½ Pounds

Absolute Maximum Ratings (Grid Drive Operation)

Anode Voltage (Note 2)	15000 max.	Volts
Grid 4 (Focus) Voltage	1100 max.	Volts
Grid 2 Voltage	600 max.	Volts
Grid 1 Voltage:		
Negative Bias Value	180 max.	Volts
Positive Bias Value	0 max.	Volts
Positive Peak Value	0 max.	Volts
Peak Heater Cathode Voltage:		
Heater Negative with respect to Cathode:		
During Warm-up Period of 15 Second Maximum	410 max.	Volts
After Equipment Warm-up	200 max.	Volts
Heater Positive with respect to Cathode:		
Peak	180 max.	Volts
DC	25 max.	Volts

Limiting Circuit Values

Grid 1 Circuit Resistance	1.5	max.	Megohms
Grid 2 Circuit Resistance	0.5	approx.	Megohms
Grid 4 (Focus) Circuit Resistance	10000	min.	Ohms

Typical Operation & Performance

Anode Voltage	12000 Volts
Grid 4 (Focus) Voltage	0 to 400 Volts
Grid 2 Voltage	400 Volts
Grid 1 Spot Cut off Voltage (K grounded)	−45 to −85 Volts
Cathode Spot Cut off Voltage (G1 grounded)	+42 to +75 Volts
Maximum Line Width "A" with P4 (Note 3)	0.015 Inch

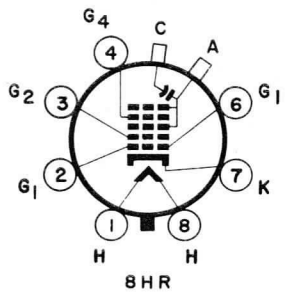

8HR

Notes

1. Westinghouse Military & Industrial Cathode Ray Tubes can be supplied with most of the standard JEDEC phosphors.
2. Operation with voltage in excess of 16KV may require shielding to limit radiation of very soft X-rays.
3. Line width is measured before installation of the etched safety panel by the shrinking raster method with an anode current of 300 microamperes.

May 1968
New Information
S6−2C−11C, S5−10A, WI−1300

Industrial & Military CRT

12", 110° Magnetic Deflection, ES Focus

Type: WL-30886
Etched Laminated Safety Panel
Integral Mounting Shell
Line Width = 0.015"

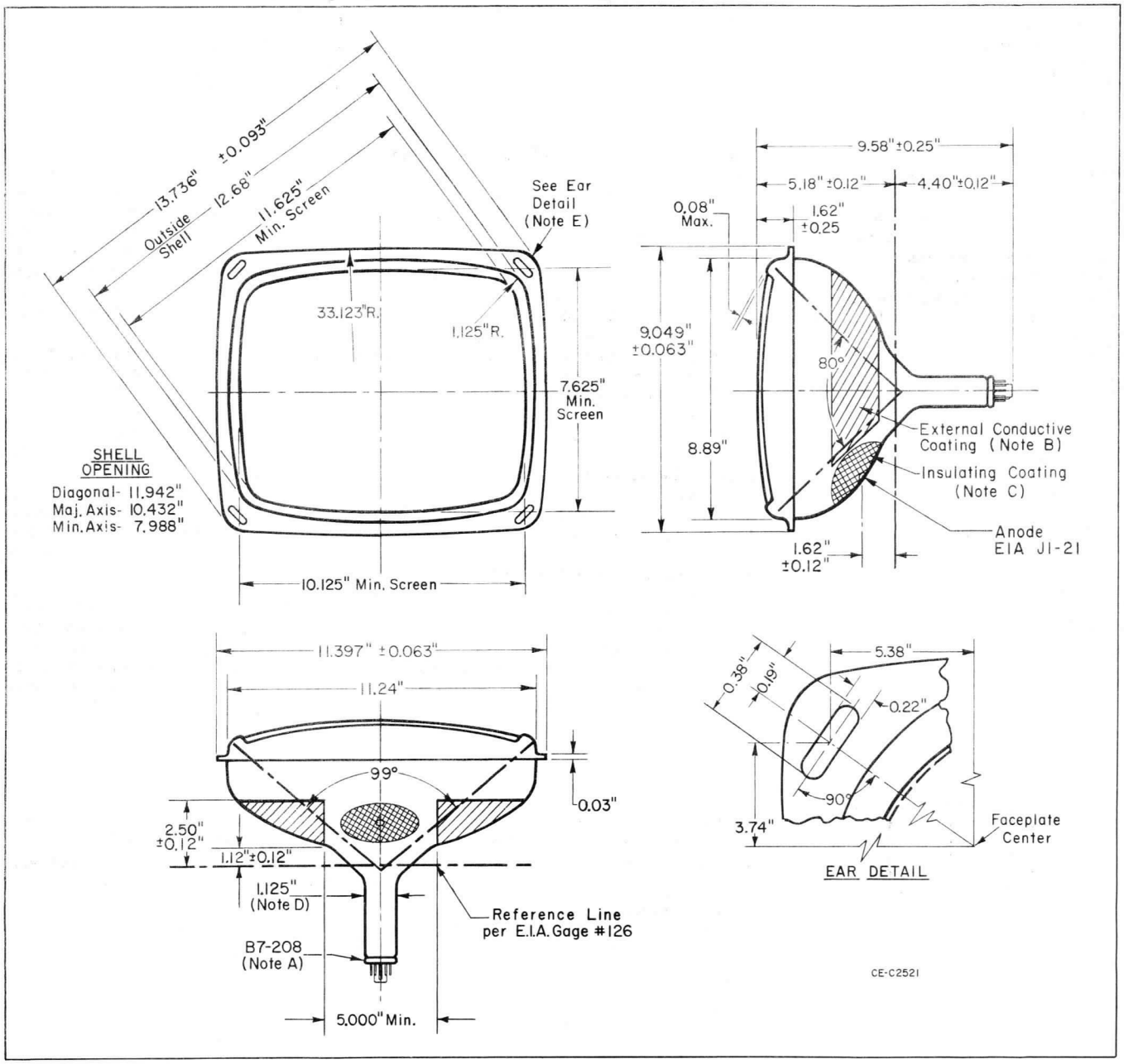

Outline Notes

A. Lateral strains on base pins must be avoided. The socket should have flexible leads permitting movement. The perimeter of the base wafer will be inside a 1.750" diameter circle concentric with tube axis. Base pin 2 aligns with minor axis within 30° and is on same side as anode terminal.

B. External conductive coating forms supplementary filter capacitance and must be grounded.

C. Transparent insulating coating 3" in diameter. Clean only with soft, dry, lintless cloth.

D. Neck diameter may be a maximum of 1.168" at the splice.

E. Shell must be grounded.

Westinghouse Electric Corporation
Electronic Tube Division, Elmira, N. Y. 14902
Printed in U. S. A.

Westinghouse

Industrial & Military CRT Ruggedized Tube - Yoke - Shield Assembly

Type: WX-30890P- ★

Magnetic Deflection, ES Focus
Line Width = 0.0006″ (0.015mm)
Over 0.5″ x 4.25″ Area 12.7 x 108mm
5″ (127mm) Diameter Flat Faceplate

Basic Characteristics
40° Magnetic Deflections
Electrostatic Focus
5″ (127mm) Flat Faceplate

Typical Applications
Aerial Photographic
Recording
Single Line Scan Display

Special Features
0.0006″ (0.015mm) Line Width
Reduced Deflection
Defocusing

Electrical

Cathode	Coated Unipotential
Heater:	
Voltage	6.3 Volts
Current	0.45 Ampere
Direct Interelectrode Capacitances:	
Grid 1 to all Other Electrodes	24 pF
Cathode to all Other Electrodes	17 pF
Focusing Method	Electrostatic
Deflection	40° Magnetic
Yoke Characteristics:	
Vertical Inductance	140 ± 10% μH
Vertical Resistance	0.3 ± 10% Ohms
Horizontal Inductance	117 ± 10% μH
Horizontal Resistance	0.3 ± 10% Ohms

Optical

Screen Phosphor	Note 1
Faceplate:	
Configuration (Note 2)	Flat
Glass	Clear
Transmission	90%
Index of Refraction	1.519

Mechanical

Mounting Position	Any
Net Weight (Approx.)	20 Pounds
	8.8 kg

★ The WX-number identifies a specific laboratory design; the design and, consequently, the data and type number are subject to change. No obligations are assumed to manufacture this particular device in the future unless otherwise arranged. These drawings and specifications are the property of Westinghouse Electric Corporation, Electronic Tube Division, and shall not be reproduced or copied or used as the basis for the manufacture or sale of apparatus and/or devices without permission.

Absolute Maximum Ratings

Anode Voltage (Note 3)	18000 max. Volts
Grid 3 (Focus) Voltage (Note 4)	6000 max. Volts
Grid 2 Voltage	600 max. Volts
Grid 1 Voltage:	
Negative Bias Value	180 max. Volts
Positive Bias Value	0 max. Volts
Positive Peak Value	0 max. Volts
Peak Heater-Cathode Voltage:	
Heater Negative with respect to Cathode:	
During Warm-up Period of 15 sec. max.	410 max. Volts
After Equipment Warm-up Period	180 max. Volts
Heater Positive with respect to Cathode:	
Peak	180 max. Volts
DC	0 max. Volts

Limiting Circuit Values

Grid 1 Circuit Resistance	1.5 max. Megohms
Grid 2 Circuit Resistance	See Note 5

Typical Operating Conditions & Performance

Anode Voltage (Note 3)	15000 Volts
Grid 3 (Focus) Voltage (Note 4)	4000 to 4400 Volts
Grid 2 Voltage	500 Volts
Grid 1 Spot Cutoff Voltage	−35 to −80 Volts
Line Width with P11 (Note 6):	
Center	0.0006 Inch
	.015 mm
Edge	0.0006 Inch
	.015 mm
Deflection Sensitivity:	
Vertical	1.2 Amperes/Inch
Horizontal	1.2 Amperes/Inch
Spot Position (Note 7)	3 mm

Environmental Capability

The WX-30890P- will withstand, without damage, vibration at 10G from 55 to 500 CPS and will operate without degradation of performance while subjected to vibration at 0.08″ (2mm) double amplitude up to 27 CPS and at 3G from 27 to 500 CPS.

Notes

1. Westinghouse Military & Industrial Cathode Ray Tubes can be supplied with most of the standard JEDEC phosphors.
2. The faceplate is a ground and polished flat plate 0.495″ ±0.005″ (12.57 ±0.13mm) thick with a maximum deviation from mean thickness for individual plates of 0.001″ (0.0254). Maximum deviation from flatness is 0.001″ (0.0254) within a circle of 4″ (102mm) diameter centered on the tube axis. Faceplate tilt, relative to the tube axis, will not exceed 0.5°.
3. Operation with voltage in excess of 16KV may require shielding to limit radiation of very soft x-rays.
4. The grid 3 electrode may draw a peak current of 2 milliamperes with a representative value of 300 microamperes under normal operation.
5. A grid 2 circuit resistance of approximately 0.5 megohm should be provided. In addition it is recommended that a suitable device be used to limit grid 2 voltage to the maximum rated value to prevent tube damage in case of a momentary arc.
6. Line width is defined as the distance between the half-amplitude points of the light-energy distribution of the line and is measured with a peak current of 1 microampere, using the slit-scan technique described in Westinghouse reprint #5510. Line width with other phosphors may vary slightly. Dynamic focus modulation is necessary to maintain optimum resolution over entire face. Close control of supply regulation and ripple is necessary to ensure optimum focus. Typically, a 0.1% change in focus or anode voltage, from best value, will increase spot size approximately 10%.
7. The undeflected focused spot lies within a circle of 3 mm radius concentric with the faceplate.

September 1970
New Information
TC−2236-2

Industrial & Military CRT
Ruggedized Tube - Yoke - Shield Assembly

Type: WX-30890P-

Magnetic Deflection, ES Focus
Line Width = 0.0006″ (0.015mm)
Over 0.5″ x 4.25″ Area 12.7 x 108mm
5″ (127mm) Diameter Flat Faceplate

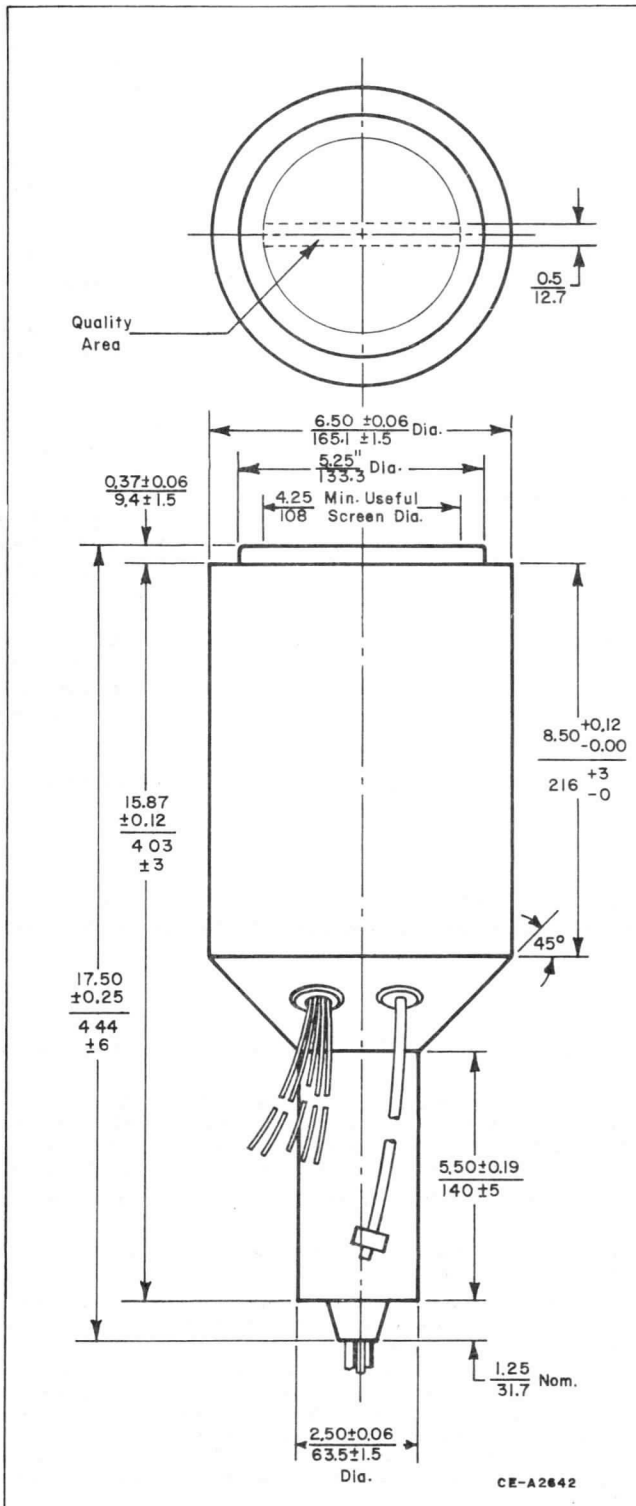

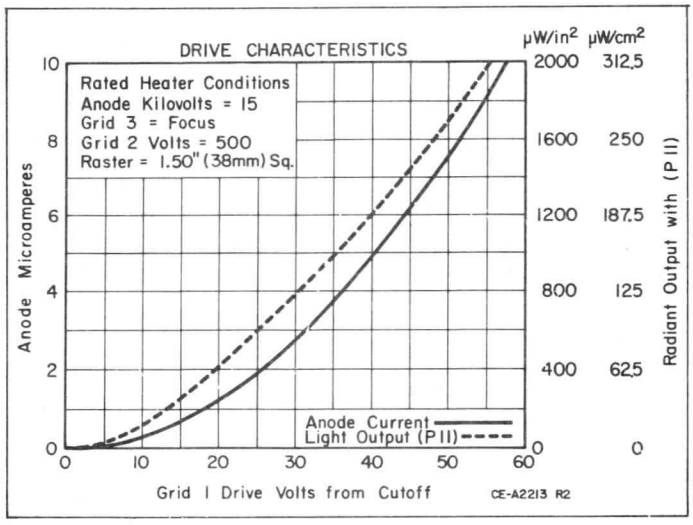

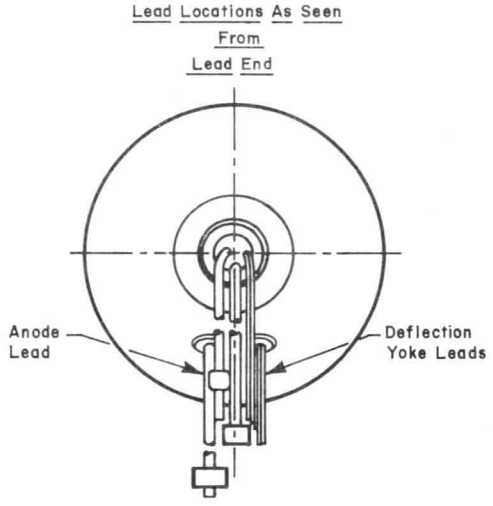

Lead Index

Gun Leads

Heater	36″ (914mm)	Brown
Cathode	36″ (914mm)	Purple
Grid 1	36″ (914mm)	Green
Grid 2	34″ (864mm)	AMP 840706 (Yellow)
Grid 3 (Focus)	34″ (864mm)	AMP 837740 (White)

Bulb Leads

Anode	34″ (864mm)	AMP 833779

Deflection Yoke Leads ..... **AMP 837740 Red**
All 36″ (914mm) Long

+	Connect	−	Facing CRT Spot Moves
Blue	White & Red	Brown	Up
Green	Black & Orange	Yellow	Left

Westinghouse Electric Corporation
Electronic Tube Division, Elmira, N. Y. 14902
Printed in U.S.A.

Westinghouse

Industrial & Military CRT Ruggedized Tube - Yoke - Shield Assembly

Magnetic Deflection, ES Focus

Type: WX-30914P11
Line Width = 0.0005″
0.25″ x 4.25″ Fiber-Optic Faceplate

Basic Characteristics
40° Magnetic Deflection
Electrostatic Focus
Grounded Anode Operation

Typical Applications
Aerial Photographic Recording
Single Line Scan Display

Special Features
0.0005″ Line Width
Reduced Deflection Defocusing
Raised Cylindrical High-Quality Fiber-Optic Faceplate

Electrical

Cathode	Coated Unipotential
Heater:	
Voltage	6.3 Volts
Current	0.45 Ampere
Direct Interelectrode Capacitances:	
Grid 1 to All Other Electrodes	30 pF
Cathode to All Other Electrodes	20 pF
Focusing Method	Electrostatic
Deflection	40° Magnetic
Yoke Characteristics: Single-End Operation	
Vertical Inductance	11 ± 10% mH
Vertical Resistance	11 ± 10% Ohms
Horizontal Inductance	117 ± 10% μH
Horizontal Resistance	0.3 ± 10% Ohms

Optical

Screen Phosphor	P11
Minimum Useful Screen Area	0.25″ x 4.25″
Fiber-Optic Faceplate:	
Configuration	Cylindrical
Radius of Curvature	2 Inch
Fiber Diameter	5 Microns
Numerical Aperture	0.66 Dark Clad

Mechanical

Mounting Position	Any
Net Weight (maximum)	23 Pounds

Grounded Anode Operation (Note 1)
Absolute Maximum Ratings
Voltages Referenced to Cathode

Anode Voltage (Note 2)	18000 max. Volts
Grid 3 (Focus) Voltage (Note 3)	6000 max. Volts
Grid 2 Voltage	600 max. Volts
Grid 1 Voltage:	
Negative Bias Value	180 max. Volts
Positive Bias Value	0 max. Volts
Positive Peak Value	0 max. Volts
Heater-Cathode Voltage:	
Heater Negative with respect to Cathode:	
During warm-up period of 15 sec. max.	410 max. Volts
After Equipment warm-up period	180 max. Volts
Heater Positive with respect to Cathode:	
Peak	180 max. Volts
DC	25 max. Volts

Limiting Circuit Values

Grid 1 Circuit Resistance	1.5 max. Megohms
Grid 2 Circuit Resistance	See Note 4

Typical Operating Conditions
Voltages Referenced to Cathode

Anode Voltage (Note 2)	15000 Volts
Grid 3 (Focus) Voltage (Note 3)	4400 ± 10% Volts
Grid 2 Voltage	500 Volts
Grid 1 Spot Cutoff Voltage	−35 to −80 Volts
Maximum Line Width for P 11: (Note 5)	
Center	0.0005 Inch
Edge	0.00065 Inch
Deflection Sensitivity: (At 2″ Radius Deflection)	
Vertical	0.13 Amperes/Inch
Horizontal	1.15 Amperes/Inch
Spot Position (Note 6)	3mm

Environmental Capability
The WX-30914P11 ruggedized package will meet the shock requirements of Mil-T-5422E Par. 4. 3. 2. 1.

Notes

1. The WX-30914P11 must always be operated with the anode grounded. The voltages listed are referenced to the cathode potential for convenience.
2. Operation with voltage in excess of 16KV may require shielding to limit radiation of very soft X-rays.
3. The grid 3 electrode may draw a peak current of 2 milliamperes with a representative value of 300 microamperes under normal operation.
4. A grid 2 circuit resistance of approximately 0.5 megohms should be provided. In addition it is recommended that a suitable device be used to limit grid 2 voltage to the maximum rated value to prevent tube damage in case of a momentary arc.
5. Line width is defined as the distance between the half-amplitude points of the light-energy distribution of the line and is measured with a peak current of 0.5 microampere, using the slit-scan technique described in Westinghouse reprint #5510. Line width with other phosphors may vary slightly. Dynamic focus modulation is necessary to maintain optimum resolution over entire face. Close control of supply regulation and ripple is necessary to ensure optimum focus. Typically, a 0.1% change is focus or anode voltage, from best value, will increase spot size approximately 10%.
6. The undeflected focused spot lies within a circle of 3mm radius concentric with the shield.

March 1968
New Information
S6−2C−11C, S5−10A, WI−1300

Industrial & Military CRT Ruggedized Tube-Yoke -Shield Assembly

Magnetic Deflection, ES Focus

Type: WX-30914P11
Line Width = 0.0005"
0.25" x 4.25" Fiber-Optic Faceplate

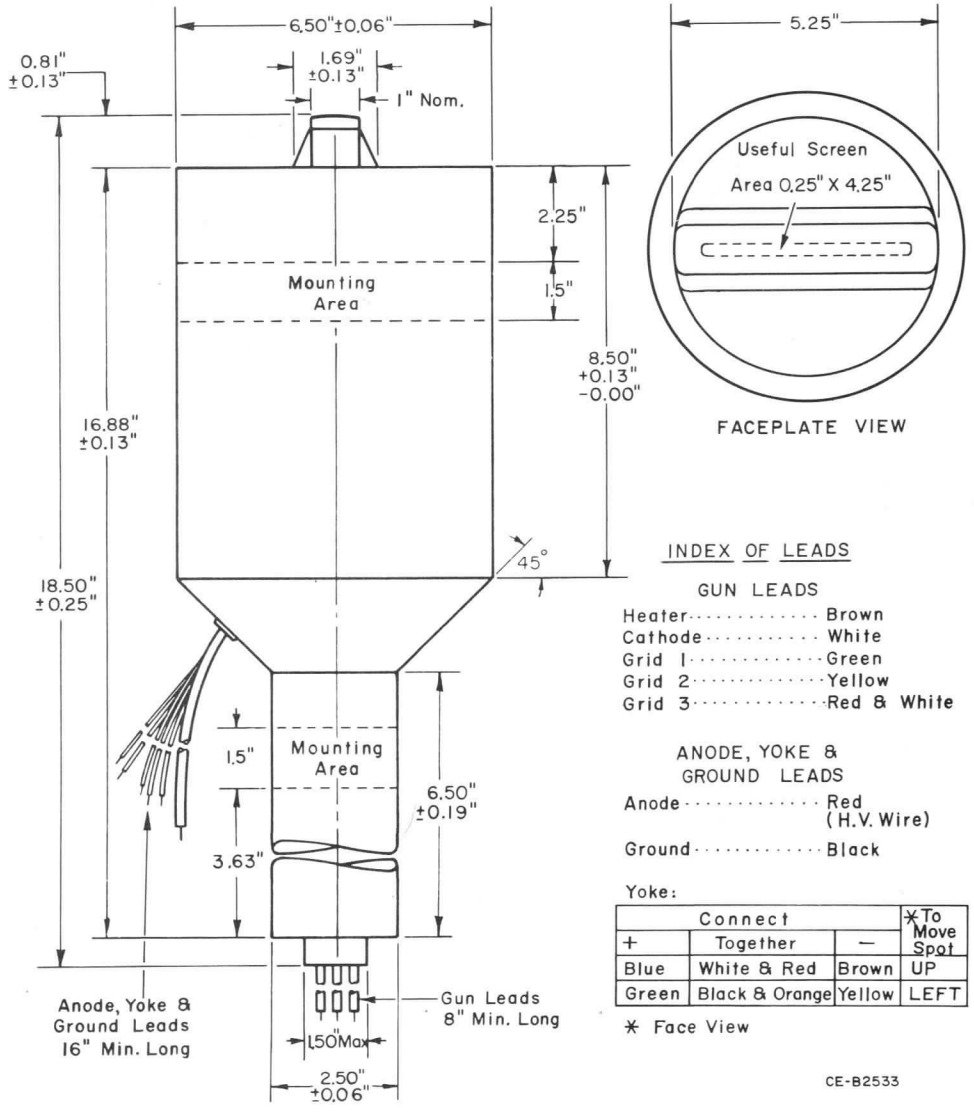

INDEX OF LEADS

GUN LEADS

Heater	Brown
Cathode	White
Grid 1	Green
Grid 2	Yellow
Grid 3	Red & White

ANODE, YOKE & GROUND LEADS

Anode	Red (H.V. Wire)
Ground	Black

Yoke:

Connect +	Together	Connect −	*To Move Spot
Blue	White & Red	Brown	UP
Green	Black & Orange	Yellow	LEFT

* Face View

CE-B2533

Westinghouse Electric Corporation
Electronic Tube Division, Elmira, N. Y. 14902
Printed in U. S. A.

Industrial & Military CRT

Westinghouse

Type: WX-30919P-★

4″ x 5″ Rectangular Flat Faceplate
Electrostatic Focus & Deflection
Character Display
Line Width = 0.015″

Basic Characteristics
4″ x 5″ Rectangular Flat Faceplate
Electrostatic Focus & Deflection

Typical Applications
Oscillography
Alpha-Numerics
Displays

Special Features
High Deflection
Sensitivity
0.015″ Line Width

Electrical

Cathode	Coated Unipotential
Heater:	
Voltage	6.3 Volts
Current	0.6 Ampere
Direct Interelectrode Capacitances:	
Grid 1 to All Other Electrodes	8 pF
Cathode to All Other Electrodes	8 pF
D1 to D2	2.5 pF
D3 to D4	2.0 pF
D1 to All Other Electrodes	8 pF
D2 to All Other Electrodes	8 pF
D3 to All Other Electrodes	7 pF
D4 to All Other Electrodes	7 pF
Focusing Method	Electrostatic
Deflection	Electrostatic

Optical

Screen Phosphor	Note 1
Faceplate:	
Configuration	Flat
Glass	Clear
Transmission	92%

Mechanical

Mounting Position	Any
Net Weight (Approx.)	2.8 Pounds

Absolute Maximum Ratings

Astigmatism Electrode Voltage	4400 max.	Volts
Anode 2 Voltage	4400 max.	Volts
Anode 1 (Focus) Voltage	1650 max.	Volts
Grid 1 Voltage:		
Negative Bias Value	180 max.	Volts
Positive Bias Value	0 max.	Volts
Positive Peak Value	0 max.	Volts
Peak Heater-Cathode Voltage:		
Heater Negative with respect to Cathode:		
During Warm-up Period of 15 sec. max.	410 max.	Volts
After Equipment Warm-up Period	180 max.	Volts
Heater Positive with respect to Cathode:		
Peak	180 max.	Volts
DC	0 max.	Volts
Peak Voltage Between Anode 2 and Any Delfection Electrode	500 max.	Volts
Anode 2 plus Astigmatism Electrode Dissipation (mean)	3 max.	Watts

Limiting Circuit Values

Grid 1 Circuit Resistance	1.5 max.	Megohms
Resistance in Any Deflection Electrode Circuit (Note 2)	100000 max.	Ohms

Typical Operating Conditions

Astigmatism Electrode Voltage	2400 to 2600	Volts
Anode 2 Voltage	2500	Volts
Anode 1 (Focus) Voltage	200 to 800	Volts
Anode 1 (Focus) Current	−15 to +16	μA
Grid 1 Spot Cutoff Voltage	−34 to −70	Volts
Minimum Light Output with P31 (Note 3)	12	Ft-L
Maximum Modulation (Note 3)	40	Volts
Maximum Cathode Current (Note 3)	500	μA
Maximum Line Width "A" with P31 (Note 3)	0.015	Inch
Deflection Factors:		
D1 D2	32 to 40	Volts/Inch
D3 D4	25 to 32	Volts/Inch
Deflection Factor Uniformity (Note 3)		3%
Pattern Distortion		See Note 4
Spot Position (Note 5)	0.5	Inch

Notes

1. Westinghouse Military & Industrial Cathode Ray Tubes can be supplied with most of the standard JEDEC phosphors.
2. It is recommended that the deflection electrode impedances be approximately equal.
3. Measured in accordance with MIL-E-I specs.
4. All portions of the edges of a raster pattern, adjusted so that the widest points just touch the sides of a 70 x 100 mm rectangle, will fall within the area bounded by the 70 x 100 mm rectangle and a concentric 67 x 96 mm rectangle.
5. With deflecting electrodes connected to anode 2, and with the tube shielded against external magnetic fields, the focused spot is within a square of specified size centered on the tube face and with sides parallel to scanning axes.

★ The WX-number identifies a specific laboratory design; the design and, consequently, the data and type number are subject to change. No obligations are assumed to manufacture this particular device in the future unless otherwise arranged. These drawings and specifications are the property of Westinghouse Electric Corporation, Electronic Tube Division, and shall not be reproduced or copied or used as the basis for the manufacture or sale of apparatus and/or devices without permission.

February 1969
New Information
S6–2C–11C, TC–2236

Industrial & Military CRT

Type: WX-30919P-★

4″ x 5″ Rectangular Flat Faceplate
Electrostatic Focus & Deflection
Character Display
Line Width = 0.015″

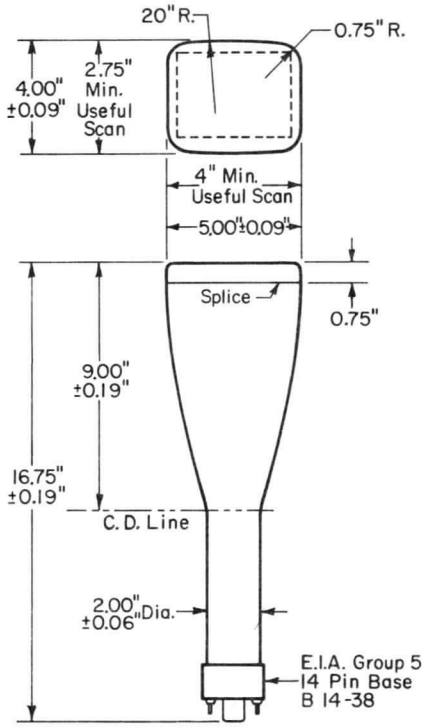

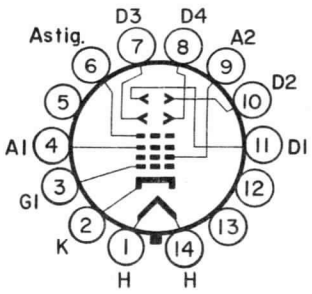

Outline Notes

A. Plane defined by pin 1 and tube axis alines with D3 - D4 trace ± 10°.

B. Positive voltage on D1 deflects beam toward mid-point between pins 4 & 5.

C. Positive voltage on D3 deflects beam toward pin 1.

D. Angle between D1 D2 trace and D3 D4 trace is 90° ± 1°.

E. D3 D4 trace alines with bulb sidewall within 3°.

Westinghouse Electric Corporation
Electronic Tube Division, Elmira, N. Y. 14902
Printed in U.S.A.

Westinghouse

Industrial & Military CRT

Type: WL-31092

12", 110° Magnetic Deflection, ES Focus
Integral Mounting Shell
Line Width = 0.010"

Basic Characteristics
12" Rectangular
110° Magnetic Deflection
Low Voltage ES Focus

Typical Applications
Monitor

Special Features
Implosion Protection with
Integral Mounting Shell

Electrical

Cathode	Coated Unipotential
Heater:	
Voltage	6.3 Volts
Current	0.45 Ampere
Direct Interelectrode Capacitances:	
Grid 1 to All Other Electrodes	6 pF
Cathode to All Other Electrodes	5 pF
Focusing Method	Electrostatic
Deflection	110° Magnetic

Optical

Screen Phosphor	Note 1
Faceplate:	
Configuration	Spherical
Glass	Dark Tint
Transmission	48%

Mechanical

Mounting Position	Any
Net Weight (Approx.)	6.25 Pounds

Absolute Maximum Ratings (Grid Drive Operation)

Anode Voltage (Note 2)	15000	max.	Volts
Grid 4 (Focus) Voltage	1100	max.	Volts
Grid 2 Voltage	600	max.	Volts
Grid 1 Voltage:			
Negative Bias Value	180	max.	Volts
Positive Bias Value	0	max.	Volts
Positive Peak Value	0	max.	Volts
Peak Heater Cathode Voltage:			
Heater Negative with respect to Cathode:			
During Warm-up Period of 15 Second Maximum	410	max.	Volts
After Equipment Warm-up	200	max.	Volts
Heater Positive with respect to Cathode:			
Peak	180	max.	Volts
DC	25	max.	Volts

Limiting Circuit Values

Grid 1 Circuit Resistance	1.5	max.	Megohms
Grid 2 Circuit Resistance	0.5	approx.	Megohms
Grid 4 (Focus) Circuit Resistance	10000	min.	Ohms

Typical Operation & Performance

Anode Voltage	12000	Volts
Grid 4 (Focus) Voltage	0 to 400	Volts
Grid 2 Voltage	400	Volts
Grid 1 Spot Cut off Voltage (K grounded)	−45 to −85	Volts
Cathode Spot Cut off Voltage (G1 grounded)	+42 to +75	Volts
Maximum Line Width "A" with P4 (Note 3)	0.010	Inch

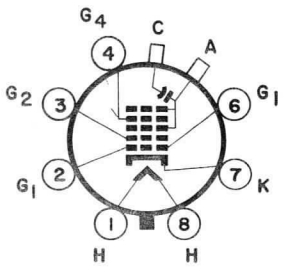

8HR

Notes

1. Westinghouse Military & Industrial Cathode Ray Tubes can be supplied with most of the standard JEDEC phosphors.
2. Operation with voltage in excess of 16KV may require shielding to limit radiation of very soft X-rays.
3. Line width is measured by the shrinking raster method with an anode current of 25 micro-amperes.

November 1968
Supersedes WX-31092P-
dated March 22, 1966
S6−2C−11C, S5−10A, WI−1300

Industrial & Military CRT

Type: WL-31092

12", 110° Magnetic Deflection ES Focus
Integral Mounting Shell
Line Width = 0.010"

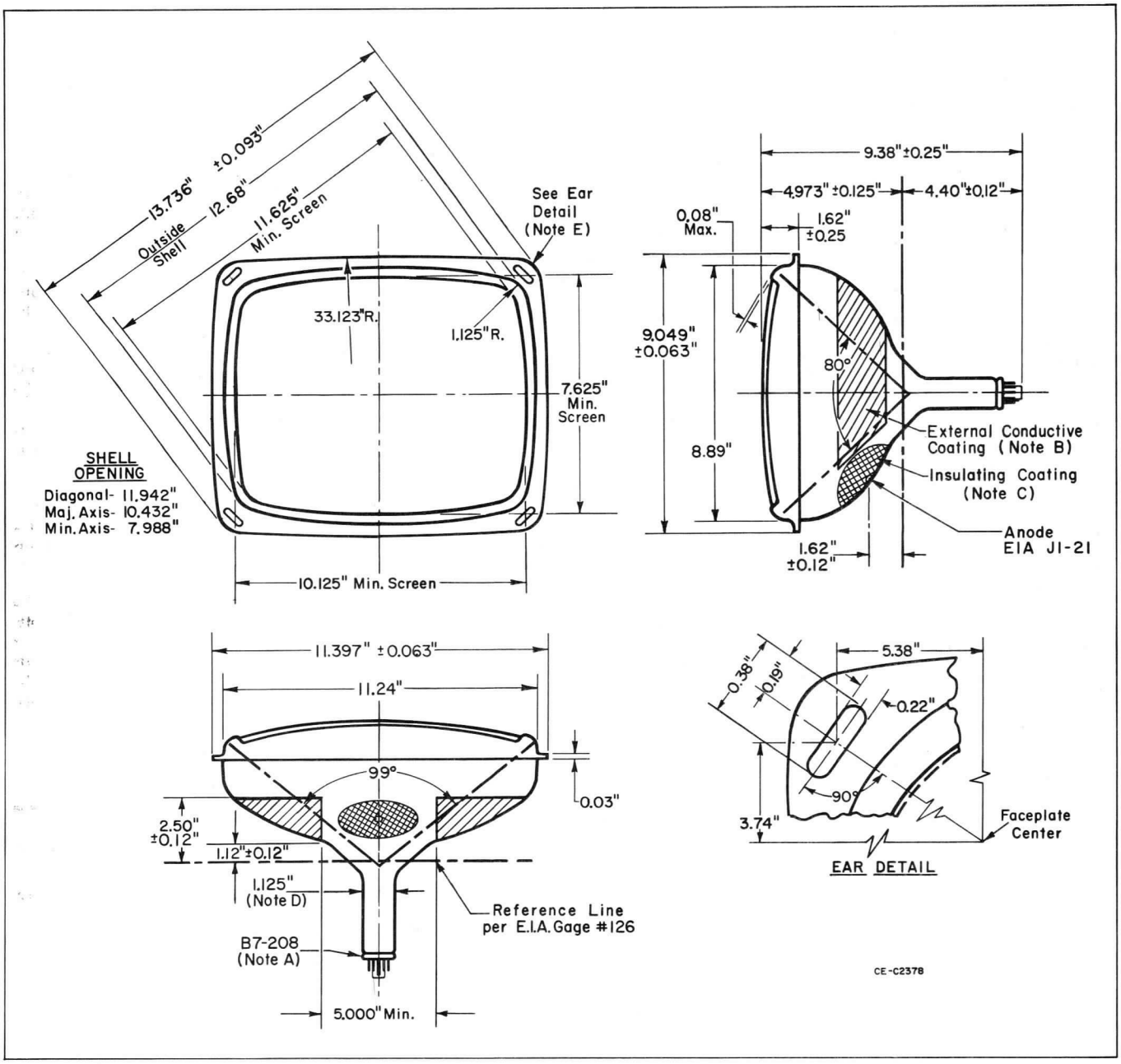

Outline Notes

A. Lateral strains on base pins must be avoided. The socket should have flexible leads permitting movement. The perimeter of the base wafer will be inside a 1.750" diameter circle concentric with tube axis. Base pin 2 aligns with minor axis within 30° and is on same side as anode terminal.

B. External conductive coating forms supplementary filter capacitance and must be grounded.

C. Transparent insulating coating 3" in diameter. Clean only with soft, dry, lintless cloth.

D. Neck diameter may be a maximum of 1.168" at the splice.

E. Shell must be grounded.

Westinghouse Electric Corporation
Electronic Tube Division, Elmira, N. Y. 14902
Printed in U.S.A.

5" INDUSTRIAL & MILITARY CATHODE RAY TUBE TYPE WX-31227P-

Basic Characteristics	Typical Applications	Special Features
5" Flat Face 40" Magnetic Deflection Electrostatic Focus Aluminized	Information Display Under High Ambient Light	High Brightness

ELECTRICAL

Cathode	Coated Unipotential
Heater:	
Voltage	6.3 Volts
Current	0.6 Ampere
Direct Interelectrode Capacitances:	
Grid 1 to all other Electrodes	9 pF
Grid 2 to all other Electrodes	7 pF
Cathode to all other Electrodes	7 pF
Focusing Method	Electrostatic
Deflection	40° Magnetic

OPTICAL

Screen Phosphor	Note 1
Faceplate:	
Configuration	Flat
Glass	Clear Non-Browning
Transmission	91%
Index of Refraction	1.52

MECHANICAL

Mounting Position	Any
Net Weight	1.75 lb.
Bulb	J40L1A

Δ The WX- number identifies a specific laboratory design; the design and, consequently, the data and type number are subject to change. No obligations are assumed to manufacture this particular device in the future unless otherwise arranged. These drawings and specifications are the property of Westinghouse Electric Corporation, Electronic Tube Division, and shall not be reproduced or copied or used as the basis for the manufacture or sale of apparatus and/or devices without permission.

ABSOLUTE MAXIMUM RATINGS	
Anode Voltage (Note 2)	25,000 max. Volts
Grid 4 (Focus) Voltage	800 max. Volts
Grid 2 Voltage	600 max. Volts
Grid 1 Voltage:	
Negative Bias Value	80 max. Volts
Positive Bias Value	0 max. Volts
Positive Peak Value	0 max. Volts
Peak Heater-Cathode Voltage:	
Heater Negative with respect to Cathode:	
During warm-up period of 15 sec. max.	410 max. Volts
After equipment warm-up	180 max. Volts
Heater Positive with respect to Cathode	180 max. Volts

LIMITING CIRCUIT VALUES	
Grid 1 Circuit Resistance	1.5 max. Megohms
Grid 2 Circuit Resistance	0.5 approx. Megohms
Grid 4 (focus) Circuit Resistance	10,000 min. Ohms

TYPICAL OPERATION AND PERFORMANCE	
Anode Voltage (Note 2)	20,000 Volts
Grid 4 (focus) Voltage	0 to 400 Volts
Grid 2 Voltage	300 Volts
Grid 1 Spot Cutoff Voltage	-40 to -70 Volts
Min. Light Output with P31 (Note 3)	2500 Ft-L
Max. Modulation (Note 4)	45 Volts
Max. Line Width "A" with P31 (Note 5)	0.012 Inch
Spot Position (Note 6)	10 mm

NOTES

1. Westinghouse Industrial and Military Cathode Ray Tubes can be supplied with most of the standard JEDEC phosphors.

2. Operation with voltage in excess of 16 KV may require shielding to limit radiation of very soft X-Rays.

3. Light output is measured with anode voltage at 20,000 volts and anode current at 500 microamperes on a 3" x 4" raster with 15750 x 60 cps scan rate.

4. Modulation is the grid 1 drive voltage above cutoff necessary to provide an anode current of 500 microamperes.

5. Line width is measured by the shrinking raster method.

6. With the tube shielded against external magnetic fields, the undeflected focused spot lies within a circle of 10 mm radius concentric with the faceplate.

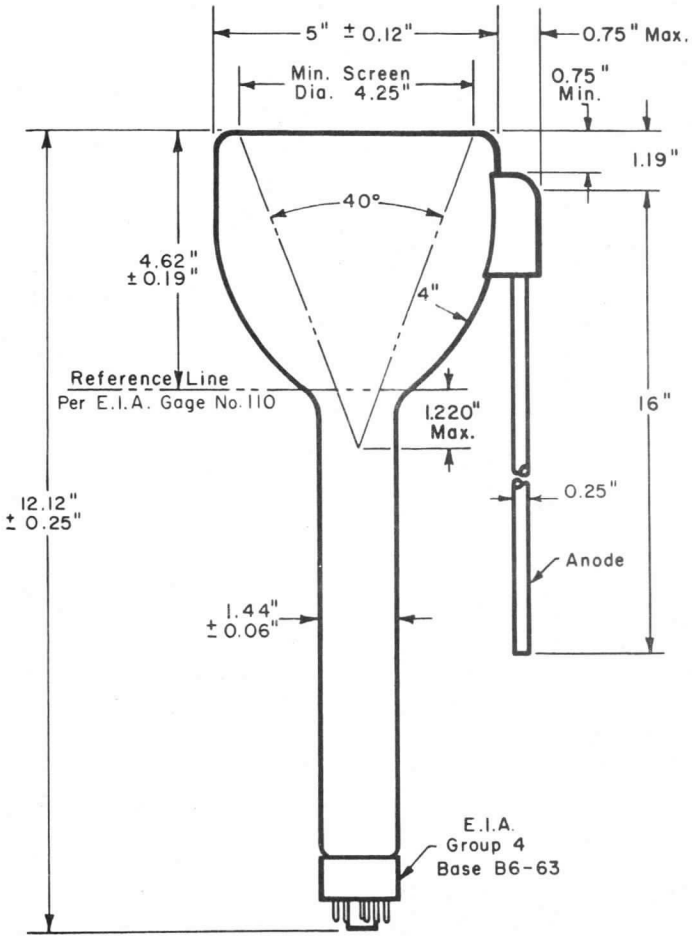
5" ± 0.12"
0.75" Max.
Min. Screen Dia. 4.25"
0.75" Min.
1.19"
40°
4.62" ± 0.19"
4"
Reference Line
Per E.I.A. Gage No. 110
1.220" Max.
16"
12.12" ± 0.25"
0.25"
Anode
1.44" ± 0.06"
E.I.A. Group 4 Base B6-63

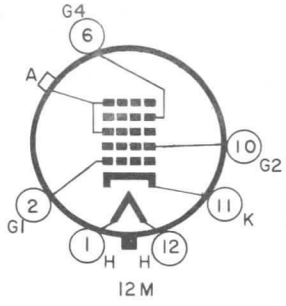
G4
6
A
10
G2
2
G1
11
K
1
H
H
12
12M



WESTINGHOUSE ELECTRIC CORPORATION, ELECTRONIC TUBE DIVISION, ELMIRA, NEW YORK

12" INDUSTRIAL & MILITARY CATHODE RAY TUBE TYPE WX-31250P-

Basic Characteristics	Typical Applications	Special Features
85° Magnetic Deflection Electrostatic Focus Aluminized 12" Rectangular	Data Display	20 mm Neck Dia. Filled Rim Implosion Protection

ELECTRICAL

Cathode	Coated Unipotential
Heater:	
Voltage	6.3 Volts
Current	0.3 Ampere
Direct Interelectrode Capacitances:	
Grid 1 to all other Electrodes	6 pF
Cathode to all other Electrodes	5 pF
Focusing Method	Electrostatic
Deflection	Magnetic
Diagonal	85°
Horizontal	79°
Vertical	65°

OPTICAL

Screen Phosphor	Note 1
Faceplate:	
Configuration	Spherical
Glass	Grey Filter Glass
Transmission	49%

MECHANICAL

Mounting Position	Any
Net Weight (Approx.)	6.5 Pounds

Δ The WX- number identifies a specific laboratory design; the design and, consequently, the data and type number are subject to change. No obligations are assumed to manufacture this particular device in the future unless otherwise arranged. These drawings and specifications are the property of Westinghouse Electric Corporation, Electronic Tube Division, and shall not be reproduced or copied or used as the basis for the manufacture or sale of apparatus and/or devices without permission.

ABSOLUTE MAXIMUM RATINGS

Anode Voltage	14000 max. Volts
Grid 4 (Focus) Voltage	1000 max. Volts
Grid 2 Voltage	700 max. Volts
Grid 1 Voltage:	
Negative Bias Value	180 max. Volts
Positive Bias Value	0 max. Volts
Positive Peak Value	0 max. Volts
Peak Heater-Cathode Voltage:	
Heater Negative with respect to Cathode:	
During warm-up period of 15 sec. max.	410 max. Volts
After equipment warm up	180 max. Volts
Heater Positive with respect to Cathode	180 max. Volts

LIMITING CIRCUIT VALUES

Grid 1 Circuit Resistance	1.5 max. Megohms
Grid 2 Circuit Resistance	0.5 approx. Megohms
Grid 4 (Focus) Circuit Resistance	10000 min. Ohms

TYPICAL OPERATION & PERFORMANCE

Anode Voltage	12000 Volts
Grid 4 (Focus) Voltage	0 to 400 Volts
Grid 2 Voltage	300 Volts
Grid 1 Spot Cutoff Voltage	-35 to -65 Volts
Max. Line Width "A" with P4 (Note 2)	.0.02 Inch
Spot Position (Note 3)	8 mm

NOTES

1. Westinghouse Industrial & Military Cathode Ray Tubes can be supplied with most of the standard JEDEC phosphors.

2. Line width is measured by the shrinking raster method. With an anode current of 100 microamperes.

3. With the tube shielded against external magnetic fields, the undeflected focused spot lies within a circle of 8 mm radius concentric with the faceplate.

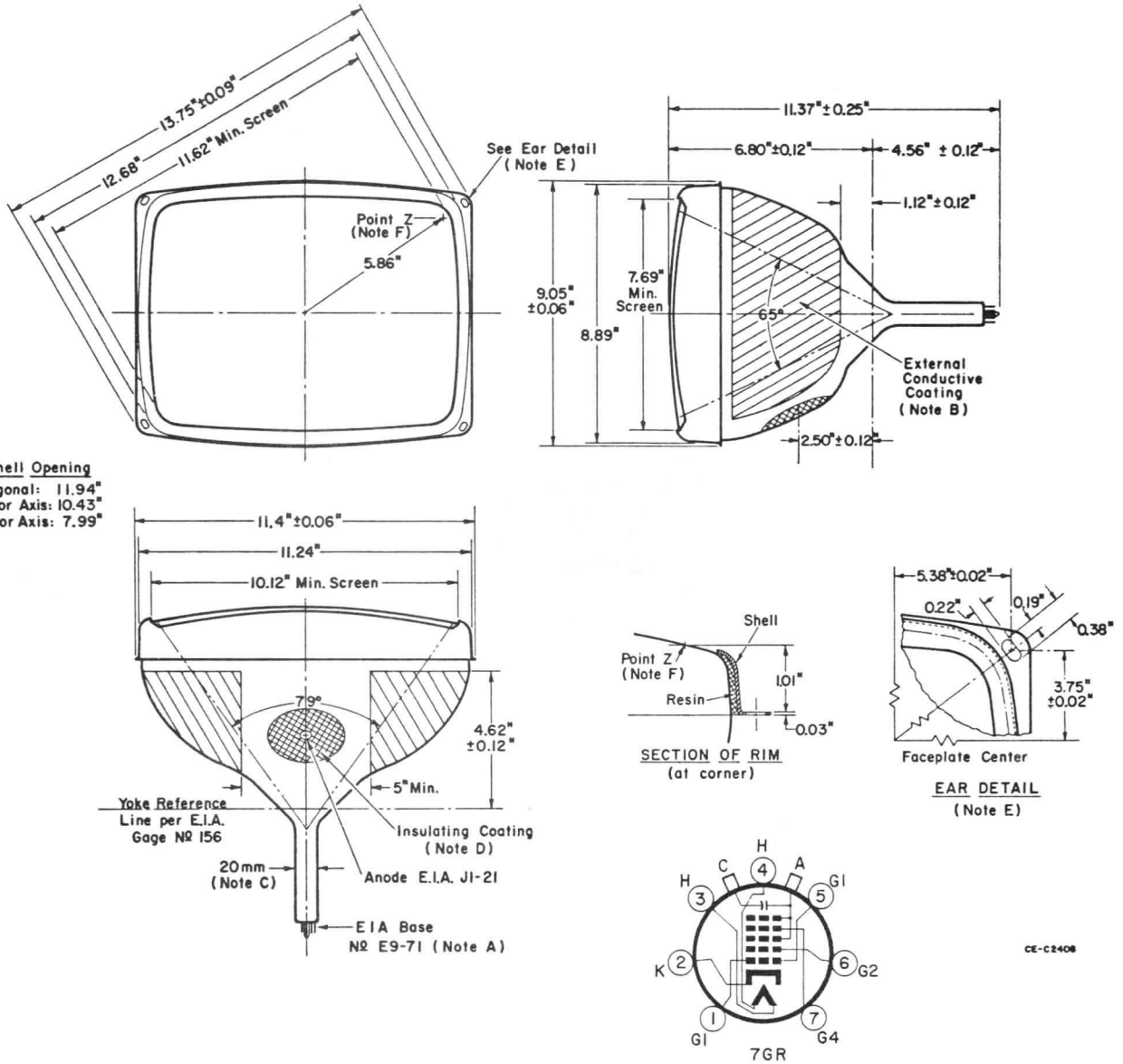

A. Lateral strains on base pins must be avoided. The socket should have flexible leads permitting movement. The perimeter of the base will be inside a 1.000" diameter circle concentric with tube axis. Base pin 2 aligns with minor axis within 30° and is on same side as anode terminal.
B. External conductive coating forms supplementary filter capacitance and must be grounded.
C. Neck diameter may be a maximum of 21 mm at the splice.
D. Transparent insulating coating 3" in diameter. Clean only with soft, dry, lintless cloth.
E. Shell must be grounded.
F. Point "Z" is located on the tube diagonal at the faceplate surface.



The information contained herein is supplied without assuming responsibility for infringement of patents or other rights of third parties which may result from its use. No license is granted by implication or otherwise under any patent or patent rights of Westinghouse Electric Corporation.

WESTINGHOUSE ELECTRIC CORPORATION, ELECTRONIC TUBE DIVISION, ELMIRA, NEW YORK

Westinghouse

Industrial & Military CRT

Type: WX-31330P- ★

16″ (406 mm) Round Faceplate
Electrostatic Focus, Magnetic Deflection
Line Width = 0.008″ (0.20 mm)

Basic Characteristics
16″ (406 mm) Round Spherical Faceplate
Electrostatic Focus
53° Magnetic Deflection
Aluminized Screen

Typical Applications
Radar Display

Special Features
Line Width = 0.008″ (0.20 mm)

Electrical

Cathode	Coated Unipotential
Heater:	
Voltage	6.3 Volts
Current	0.6 Ampere
Direct Interelectrode Capacitances:	
Grid 1 to all Other Electrodes	9 pF
Grid 2 to all Other Electrodes	7 pF
Cathode to all Other Electrodes	7 pF
Focusing Method	Electrostatic
Deflection	53° Magnetic

Optical

Screen Phosphor	Note 1
Faceplate:	
Configuration	Spherical
Glass	Neutral Gray
Transmission	76%

Mechanical

Mounting Position	Any
Net Weight (Approx.)	17 Pounds 7.7 Kilograms

Absolute Maximum Ratings

Anode Voltage (Note 2)	22000 max.	Volts
Grid 3 (Focus) Voltage (Note 3)	5000 max.	Volts
Grid 2 Voltage	600 max.	Volts
Grid 1 Voltage:		
Negative Bias Value	180 max.	Volts
Positive Bias Value	0 max.	Volts
Positive Peak Value	0 max.	Volts
Heater-Cathode Voltage:		
Heater Negative with respect to Cathode:		
During Warm-up Period of 15 sec. max.	410 max.	Volts
After Equipment Warm-up Period	180 max.	Volts
Heater Positive with respect to Cathode:		
Peak	180 max.	Volts
DC	25 max.	Volts

Limiting Circuit Values

Grid 1 Circuit Resistance	1.5 max.	Megohms
Grid 2 Circuit Resistance	See Note 4	
Grid 3 (Focus) Circuit Resistance	10000 min.	Ohms

Typical Operating Conditions & Performance

Anode Voltage (Note 2)	10000	Volts
Grid 3 (Focus) Voltage (Note 3)	1500 to 1800	Volts
Grid 2 Voltage	300	Volts
Grid 1 Spot Cutoff Voltage	−40 to −75	Volts
Max. Line Width "A" with P28 (Note 5)	0.008	Inch
	0.20	mm
Spot Position (Note 6)	10	mm

Notes

1. Westinghouse Military & Industrial Cathode Ray Tubes can be supplied with most of the standard JEDEC phosphors.
2. Operation with voltage in excess of 16KV may require shielding to limit radiation of very soft X-rays.
3. The grid 3 electrode may draw a peak current of 2 milliamperes with a representative value of 300 microamperes under normal operation.
4. A grid 2 circuit resistance of approximately 0.5 megohm should be provided. In addition it is recommended that a suitable device be used to limit grid 2 voltage to the maximum rated value to prevent tube damage in case of a momentary arc.
5. Line width is measured by the shrinking raster method with an anode current of 50 microamperes.
6. With the tube shielded against external magnetic fields, the undeflected focused spot lies within a circle of 10mm radius concentric with the faceplate.

★ The WX-number identifies a specific laboratory design; the design and, consequently, the date and type number are subject to change. No obligations are assumed to manufacture this particular device in the future unless otherwise arranged. These drawings and specifications are the property of Westinghouse Electric Corporation, Electronic Tube Division, and shall not be reproduced or copied or used as the basis for the manufacture or sale of apparatus and/or devices without permission.

October 1970
Supersedes WX-31330P- dated May 12, 1966
TC−2236-2

Industrial & Military CRT

Type: WX-31330P-

16″ (406 mm) Round Faceplate
Electrostatic Focus, Magnetic Deflection
Line Width = 0.008″ (0.20 mm)

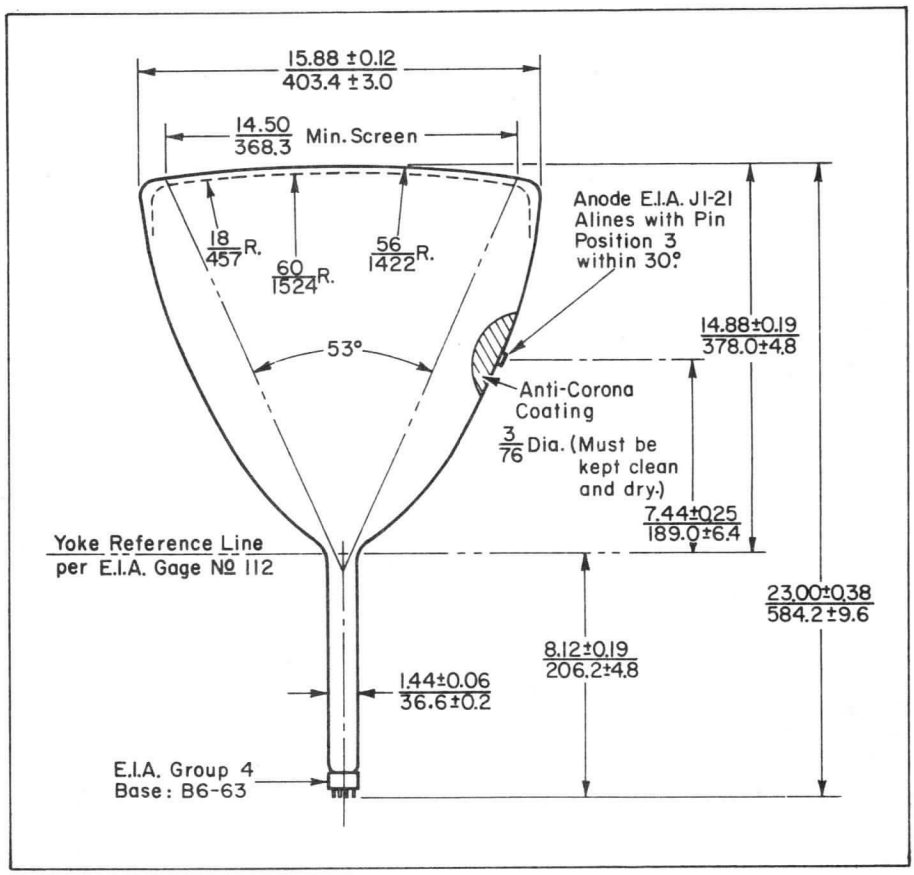

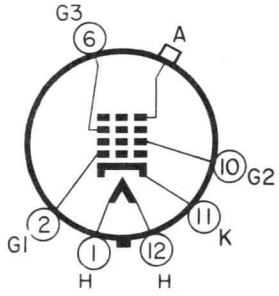

12 Q

(Dimensions in inches/mm unless otherwise shown) The millimeter dimensions are derived from the original inch dimensions, 1″ = 25.4 mm exactly.

Westinghouse Electric Corporation
Electronic Tube Division, Elmira, N. Y. 14902
Printed in U.S.A.

7" INDUSTRIAL & MILITARY CATHODE RAY TUBE TYPE WX-31337P-

Basic Characteristics	Typical Applications	Special Features
7" Round Spherical Face Plate Electrostatic Focus 50° Magnetic Deflection Aluminized	Radar	0.004" Line Width

ELECTRICAL

Cathode	Coated Unipotential
Heater:	
Voltage	6.3 Volts
Current	0.6 Ampere
Direct Interelectrode Capacitances:	
Grid 1 to all other Electrodes	9 pF
Grid 2 to all other Electrodes	7 pF
Cathode to all other Electrodes	7 pF
Focusing Method	Electrostatic
Deflection	50° Magnetic

OPTICAL

Screen Phosphor	Note 1
Faceplate:	
Configuration	Spherical
Glass	Clear
Transmission	91%

MECHANICAL

Mounting Position	Any
Net Weight	4 Pounds

ABSOLUTE MAXIMUM RATINGS

Anode Voltage (Note 2)	22000 max. Volts
Grid 3 (Focus) Voltage (Note 3)	5000 max. Volts
Grid 2 Voltage	600 max. Volts
Grid 1 Voltage:	
Negative Bias Value	180 max. Volts
Positive Bias Value	0 max. Volts
Positive Peak Value	0 max. Volts
Peak Heater-Cathode Voltage:	
Heater Negative with respect to Cathode:	
During warm-up period of 15 sec. max.	410 max. Volts
After equipment warm up	180 max. Volts
Heater Positive with respect to Cathode	180 max. Volts

Δ The WX- number identifies a specific laboratory design; the design and, consequently, the data and type number are subject to change. No obligations are assumed to manufacture this particular device in the future unless otherwise arranged. These drawings and specifications are the property of Westinghouse Electric Corporation, Electronic Tube Division, and shall not be reproduced or copied or used as the basis for the manufacture or sale of apparatus and/or devices without permission.

LIMITING CIRCUIT VALUES

Grid 1 Circuit Resistance	1.5 max. Megohms
Grid 2 Circuit Resistance	See Note 4

TYPICAL OPERATION & PERFORMANCE

Anode Voltage (Note 2)	10000 Volts
Grid 3 (Focus) Voltage (Note 3)	1500 to 1800 Volts
Grid 2 Voltage	300 Volts
Grid 1 Spot Cutoff Voltage	-40 to -70 Volts
Max. Line Width "A" with P11 (Note 5)	0.004 Inch
Spot Position (Note 6)	8 mm

NOTES

1. Westinghouse Industrial & Military Cathode Ray Tubes can be supplied with most of the standard JEDEC phosphors.

2. Operation with voltage in excess of 16KV may require shielding to limit radiation of very soft X-rays.

3. The grid 3 electrode may draw a peak current of 1 milliampere with a representative value of 300 microamperes under normal operation.

4. A grid 2 circuit resistance of approximately 0.5 megohm should be provided. In addition it is recommended that a suitable device be used to limit grid 2 voltage to the maximum rated value to prevent tube damage in case of a momentary arc.

5. Line width is measured by the shrinking raster method at 25 microamperes.

6. With the tube shielded against external magnetic fields, the undeflected focused spot lies within a circle of 8 mm radius concentric with the faceplate.

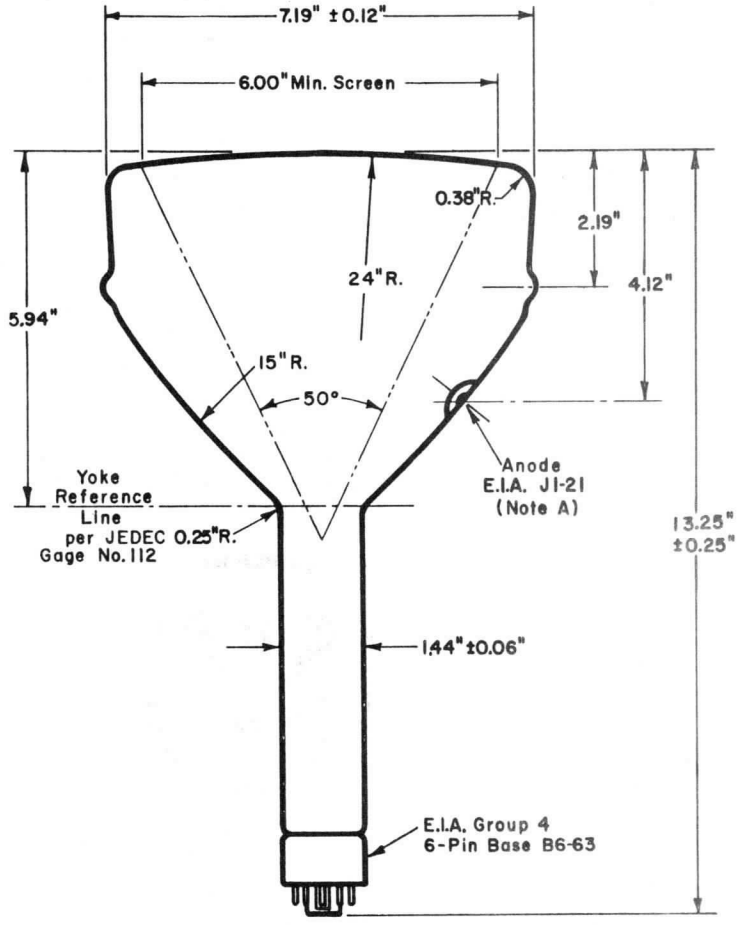

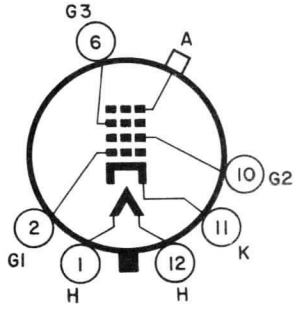

12Q

A. The plane defined by the tube axis and pin position 3 will be within 10° of the plane defined by the tube axis and the anode.



WESTINGHOUSE ELECTRIC CORPORATION, ELECTRONIC TUBE DIVISION, ELMIRA, NEW YORK

Westinghouse

Industrial & Military CRT

Type: WX-31413P-★

Magnetic Deflection, Magnetic Focus
Line Width = 0.0017" (0.043mm)
8" x 0.2" (203.2mm x 5.1mm) Useful Screen
Fiber Optic Faceplate

Basic Characteristics
8" x 0.2" (203.2mm x 5.1mm)
Fiber Optic Faceplate
52° Magnetic Deflection
Magnetic Focus

Typical Applications
Photographic Recording

Special Features
0.0017" (0.043mm) Line Width

Electrical

Cathode	Coated Unipotential
Heater:	
Voltage	6.3 Volts
Current	0.60 Ampere
Direct Interelectrode Capacitances:	
Grid 1 to All Other Electrodes	10 pF
Grid 2 to All Other Electrodes	7 pF
Cathode to All Other Electrodes	8 pF
Focusing Method	Magnetic
Deflection	52° Magnetic

Optical

Screen Phosphor	Note 1
Faceplate:	
Configuration	Cylindrical
Glass	Dark Clad Fiber Optic
Numerical Aperture	0.66
Fiber Size (Approx.)	5μ

Mechanical

Mounting Position	Any
Net Weight	4.4 Pounds
	2 Kilograms

Absolute Maximum Ratings

Anode Voltage (Notes 2 & 3)	22000 max. Volts
Grid 2 Voltage	2500 max. Volts
Grid 1 Voltage:	
Negative Bias Value	180 max. Volts
Positive Peak Value	0 max. Volts
Average Cathode Current	100 max. μA
Heater-Cathode Voltage:	
Heater Negative with respect to Cathode:	
During Warm-up Period of 15 Seconds Maximum	410 max. Volts
After Equipment Warm-up Period	180 max. Volts
Heater Positive with respect to Cathode:	
Peak	180 max. Volts
DC	25 max. Volts

Limiting Circuit Values

Grid 1 Circuit Resistance	1.5 max. Megohms
Grid 2 Circuit Resistance	See Note 4

Typical Operating Conditions & Performance

Anode Voltage (Notes 2 & 3)	20000 Volts
Grid 2 Voltage (Note 4)	2000 Volts
Grid 1 Spot Cutoff Voltage	−35 to −80 Volts
Line Width "A" with P1 (Note 5)	0.0017 Inch
	0.043 mm
Spot Position (Note 6)	4 mm

Notes

1. Westinghouse Military & Industrial Cathode Ray Tubes can be supplied with most of the standard JEDEC phosphors.
2. Tube is intended for operation only with grounded anode.
3. Operation with voltage in excess of 16KV may require shielding to limit radiation of very soft X-rays.
4. A grid 2 circuit resistance of approximately 0.5 megohm should be provided. In addition it is recommended that a suitable device be used to limit grid 2 voltage to the maximum rated value to prevent tube damage in case of a momentary arc.
5. Line width is defined as the distance between the half-amplitude points of the light-energy distribution of the line and is measured with a peak current of 1 microampere, using the slit-scan technique described in Westinghouse Pub. No. 86-704 (Reprint 5510). Line width with other phosphors may vary slightly. Dynamic focus modulation is necessary to maintain optimum resolution over entire face. Close control of supply regulation and ripple is necessary to ensure optimum focus. Typically, a 0.1% change in focus or anode voltage, from best value, will increase spot size approximately 10%.
6. With the tube shielded against external magnetic fields, the undeflected focused spot lies within a circle of 4mm radius concentric with the faceplate.

★ The WX-number identifies a specific laboratory design; the design and, consequently, the data and type number are subject to change. No obligations are assumed to manufacture this particular device in the future unless otherwise arranged. These drawings and specifications are the property of Westinghouse Electric Corporation, Electronic Tube Division, and shall not be reproduced or copied or used as the basis for the manufacture or sale of apparatus and/or devices without permission.

March 1971
New Information
TC−2236-2

Industrial & Military CRT

Type: WX-31413P-

Magnetic Deflection, Magnetic Focus
Line Width = 0.0017" (0.043mm)
8" x 0.2" (203.2mm x 5.1mm) Useful Screen
Fiber Optic Faceplate

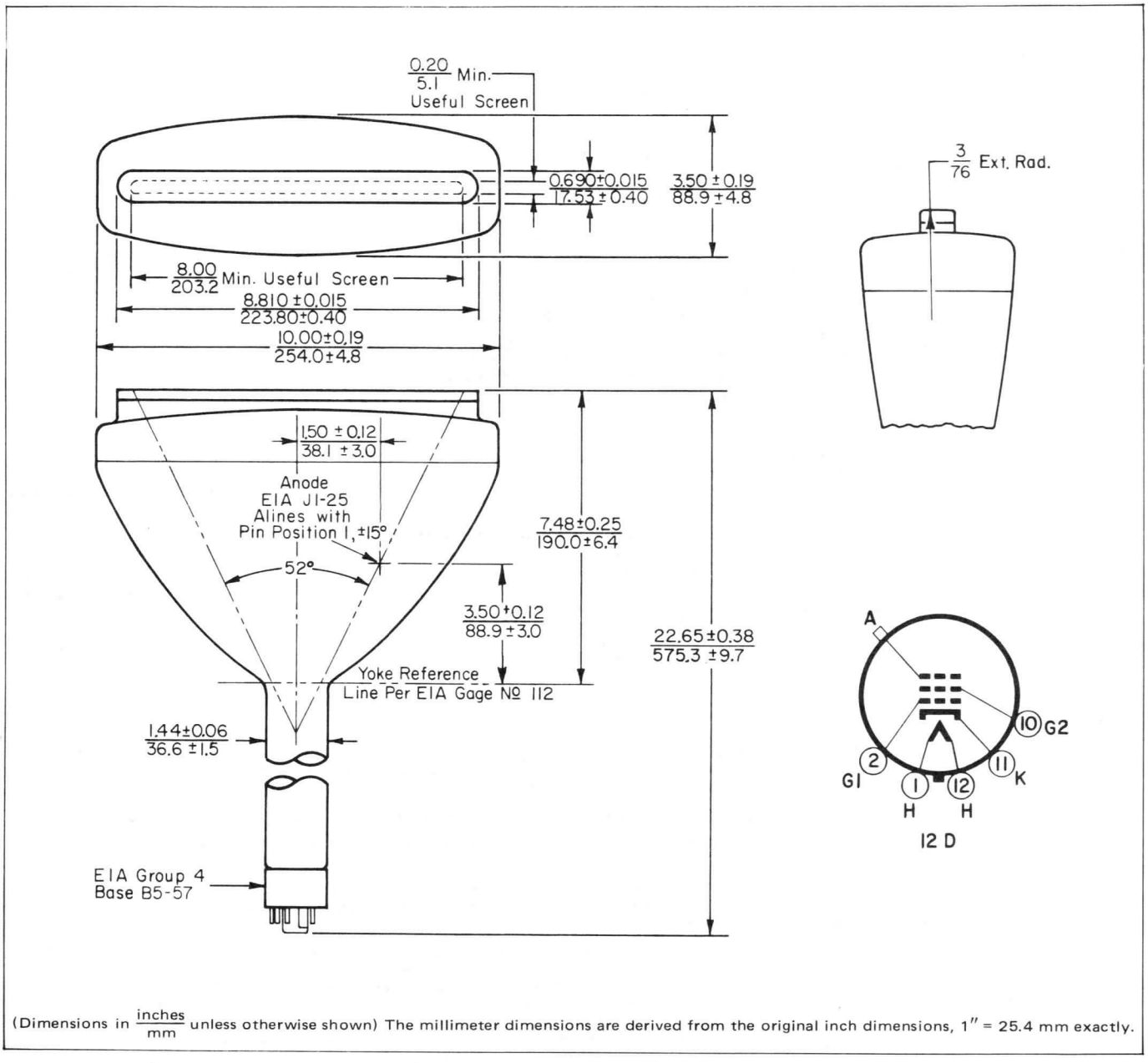

(Dimensions in inches / mm unless otherwise shown) The millimeter dimensions are derived from the original inch dimensions, 1" = 25.4 mm exactly.

Westinghouse Electric Corporation
Electronic Tube Division, Elmira, N. Y. 14902
Printed in U. S. A.

Westinghouse

Industrial & Military CRT

Type: WX-31455P-★

14″ (356mm) Rectangular Spherical Faceplate
Line Width = 0.012″ (0.30mm) at 25 μA
90° Magnetic Deflection, Low Voltage Focus

Basic Characteristics
14″ (356mm) Rectangular
90° Magnetic Deflection
Aluminized
1.44″ Neck Diameter

Typical Applications
Alphanumeric Display
Suitable For Dot Matrix
Stroke or Scan Generated Display

Special Features
Line Width = 0.012″ (0.30mm)
Uniform Center To Edge Line Width
Etched 50% Transmission Panel
Bonded to Face For Implosion Protection and Reduction of Glare

Electrical

Cathode	Coated Unipotential
Heater:	
Voltage	6.3 Volts
Current	.600 Ampere
Direct Interelectrode Capacitances:	
Grid 1 to All Other Electrodes	9 pF
Cathode to All Other Electrodes	7 pF
Focusing Method	Electrostatic
Deflection	90° Magnetic

Optical

Screen Phosphor	Note 1
Faceplate:	
Configuration	Spherical
Glass	Tinted
Transmission:	
Bulb	50%
Panel	50%
Total	25%

Mechanical

Mounting Position	Any
Net Weight	12.5 Pounds
	5.7 Kilogram

Absolute Maximum Ratings

Anode Voltage (Note 2)	22000 max. Volts
Grid 4 (Focus) Voltage	1000 max. Volts
Grid 2 Voltage	600 max. Volts
Grid 1 Voltage:	
Negative Bias Value	180 max. Volts
Positive Bias Value	0 max. Volts
Positive Peak Value	0 max. Volts
Heater-Cathode Voltage:	
Heater Negative with respect to Cathode:	
During Warm-up Period of 15 Sec. Max.	410 max. Volts
After Equipment Warm-up	180 max. Volts
Heater Positive with respect to Cathode:	
Peak	180 max. Volts
DC	25 max. Volts

Limiting Circuit Values

Grid 1 Circuit Resistance	1.5 max. Megohms
Grid 2 Circuit Resistance (Note 3)	0.5 Approx. Megohms

Typical Operation & Performance

Anode Voltage	15000 Volts
Grid 3 (Focus) Voltage	0 to 400 Volts
Grid 2 Voltage	300 Volts
Grid 1 Spot Cutoff Voltage	−28 to −72 Volts
Maximum Line Width "A" with P31 (Note 4)	0.012 Inch
	0.30 mm
Spot Position (Note 5)	8 mm

Notes

1. Westinghouse Military & Industrial Cathode Ray Tubes can be supplied with most of the standard JEDEC phosphors.
2. Operation with voltage in excess of 16KV may require shielding to limit radiation of very soft x-rays.
3. A grid 2 circuit resistance of approximately 0.5 megohm should be provided. In addition it is recommended that a suitable device be used to limit grid 2 voltage to the maximum rated value to prevent tube damage in case of a momentary arc.
4. Line width is measured by the shrinking raster method with a peak current of 25 micro-amperes. Line width with other phosphors may vary slightly.
5. With the tube shielded against external magnetic fields, the undeflected focused spot lies within a circle of 8 mm radius concentric with the faceplate.

★ The WX-number identifies a specific laboratory design; the design and, consequently, the data and type number are subject to change. No obligations are assumed to manufacture this particular device in the future unless otherwise arranged. These drawings and specifications are the property of Westinghouse Electric Corporation, Electronic Tube Division, and shall not be reproduced or copied or used as the basis for the manufacture or sale of apparatus and/or devices without permission.

September 1970
New Information
TC−2236-2

Industrial & Military CRT

Type: WX-31455P-

14″ (356mm) Rectangular Spherical Faceplate
Line Width = 0.012″ (0.30mm) at 25 μA
90° Magnetic Deflection, Low Voltage Focus

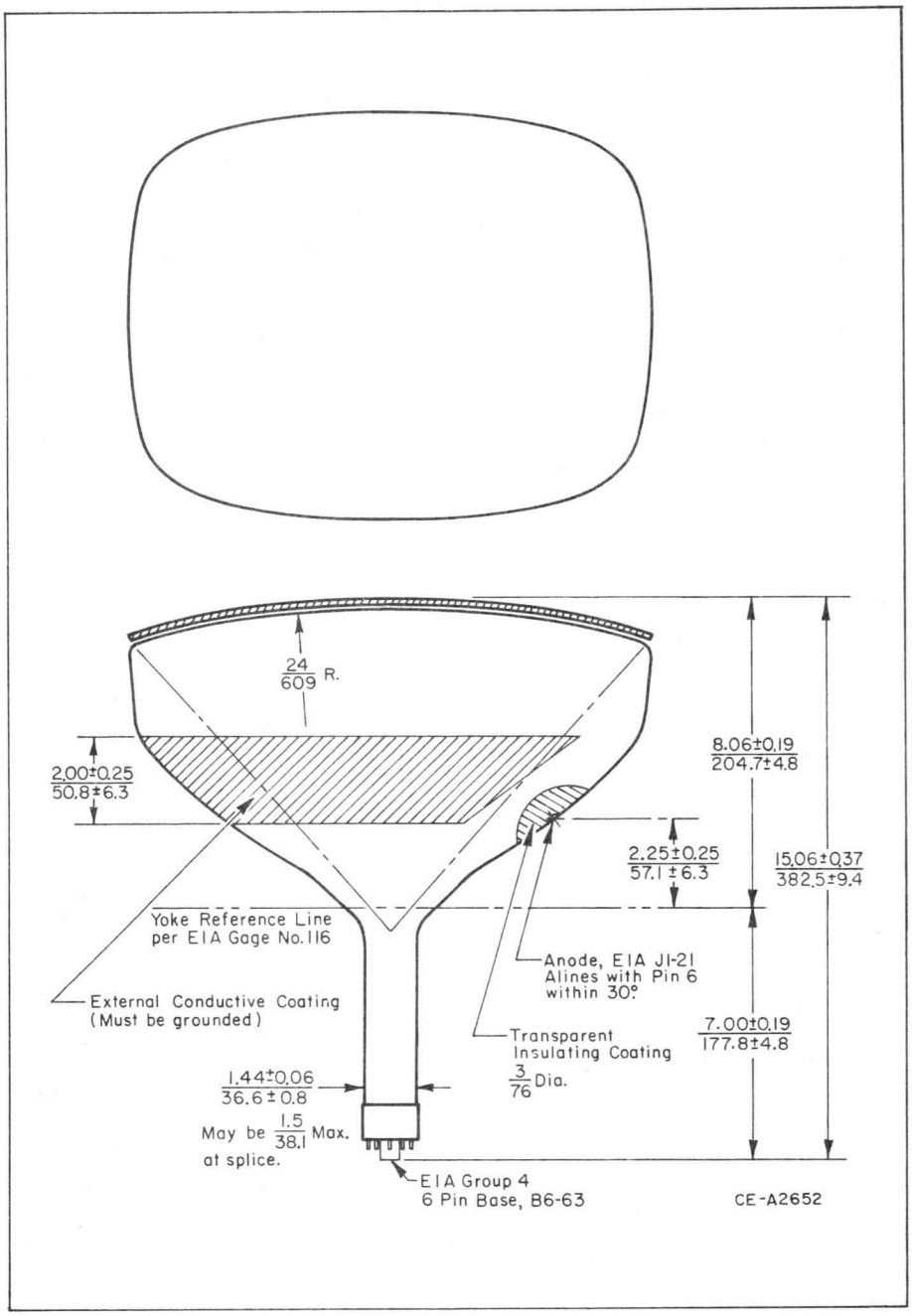

Dimensions

Item	Diag.	Horiz.	Vert.
Bulb Dimension	14.00 355.6	13.06 331.7	10.56 268.2
Tolerance	±0.12 3.0	±0.06 1.5	±0.06 1.5
Minimum Screen	13.06 331.7	12.12 307.8	9.67 245.6
Deflection Angle	90°	79°	60°

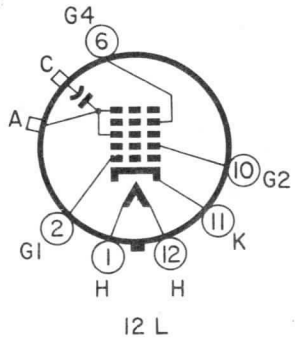

(Dimensions in inches/mm unless otherwise shown) The millimeter dimensions are derived from the original inch dimensions, 1″ = 25.4 mm exactly.

Westinghouse Electric Corporation
Electronic Tube Division, Elmira, N. Y. 14902
Printed in U.S.A.

Westinghouse

Industrial & Military CRT

Type: WX-31468P- ★

15" (375mm) 70° Magnetic Deflection, ES Focus
Line Width = 0.010" (0.25mm)

Basic Characteristics
15" (375mm) Rectangular
70°Magnetic Deflection
Low Voltage Focus

Typical Applications
Monitor
Alphanumeric Display

Special Features
Uniform Center to Edge Line Width
Line Width = 0.010" (0.25mm)

Electrical

Cathode	Coated Unipotential
Heater:	
Voltage	6.3 Volts
Current	0.60 Ampere
Direct Interelectrode Capacitances:	
Grid 1 to All Other Electrodes	6 pF
Cathode to All Other Electrodes	5 pF
Focusing Method	Electrostatic
Deflection	Magnetic

Optical

Screen Phosphor (P-31)	Note 1
Faceplate:	
Configuration	Spherical
Glass	Dark Tint
Transmission	48%

Mechanical

Mounting Position	Any
Net Weight	12.0 Pounds
	5.4 Kilograms

Absolute Maximum Ratings

Anode Voltage (Note 2)	20000 max.	Volts
Grid 4 (Focus) Voltage	1100 max.	Volts
Grid 2 Voltage	770 max.	Volts
Grid 1 Voltage:		
Negative Bias Value	180 max.	Volts
Positive Bias Value	0 max.	Volts
Positive Peak Value	0 max.	Volts
Peak Heater-Cathode Voltage:		
Heater Negative with respect to Cathode:		
During Warm-up Period of 15 Sec. max.	410 max.	Volts
After Equipment Warm-up Period	180 max.	Volts
Heater Positive with respect to Cathode:		
Peak	180 max.	Volts
DC	25 max.	Volts

Limiting Circuit Values

Grid 1 Circuit Resistance	1.5	max.	Megohms
Grid 2 Circuit Resistance	0.5	approx.	Megohms
Focus Electrode Circuit Resistance	10000	min.	Ohms

Typical Operating Conditions & Performance

Anode 3 Voltage	15000	Volts
Grid 4 (Focus) Voltage	−50 to +300	Volts
Grid 2 Voltage	300	Volts
Grid 1 Spot Cutoff Voltage	−30 to −50	Volts
Maximum Line Width "A" with P31	0.010	Inch
	0.25	mm

Notes

1. Westinghouse Military & Industrial Cathode Ray Tubes can be supplied with most of the standard JEDEC phosphors.
2. Operation with voltage in excess of 16KV may require shielding to limit radiation of very soft X-rays.

★ The WX-number identifies a specific laboratory design; the design and, consequently, the data and type number are subject to change. No obligations are assumed to manufacture this particular device in the future unless otherwise arranged. These drawings and specifications are the property of Westinghouse Electric Corporation, Electronic Tube Division, and shall not be reproduced or copied or used as the basis for the manufacture or sale of apparatus and/or devices without permission.

November 1970
New Information
TC−2243-2

Industrial & Military CRT

Type: WX-31468P-

15" (375mm) 70° Magnetic Deflection, ES Focus
Line Width = 0.010" (0.25mm)

Dimensions Item	Diagonal	Horizontal	Vertical
Bulb Dimension	14.77 ±0.12 375.2 ±3.0	12.56 ±0.12 319.0 ±3.0	10.12 ±0.12 257.0 ±3.0
Minimum Screen	14.00 355.6	11.5 292.1	9.12 231.6
Deflection Angles	70°	65°	50°

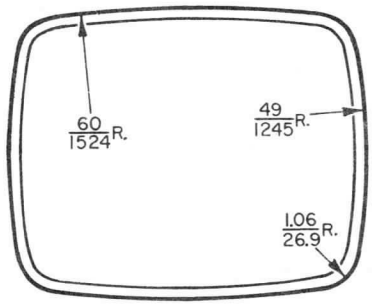

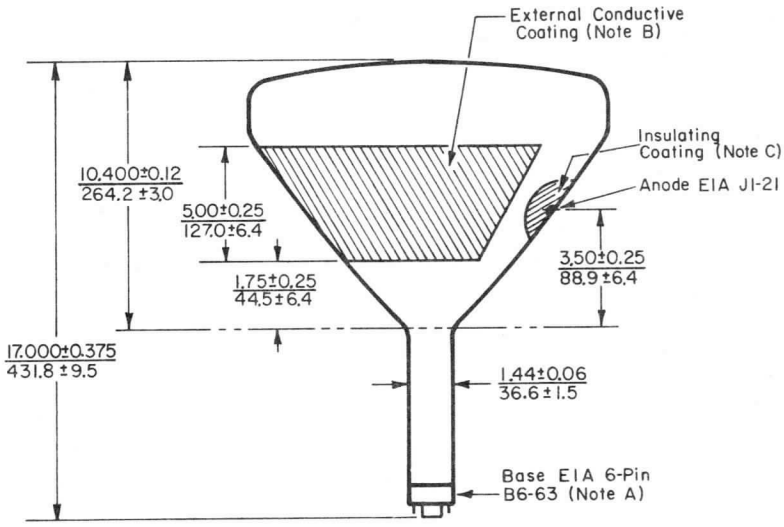

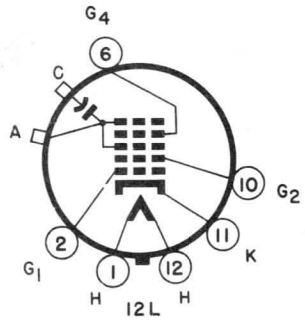

Outline Notes

A. Lateral strains on base pins must be avoided. The socket should have flexible leads permitting movement.

B. External conductive coating forms supplementary filter capacitance and must be grounded.

C. Insulating coating 3" (76mm) in diameter. Clean only with soft, dry, lintless cloth.

D. Neck diameter may be maximum of 1.503" (38.10mm) at the splice.

(Dimensions in inches/mm unless otherwise shown) The millimeter dimensions are derived from the original inch dimensions, 1" = 25.4 mm exactly.

Westinghouse Electric Corporation
Electronic Tube Division, Elmira, N. Y. 14902
Printed in U.S.A.

Westinghouse

Industrial & Military CRT Ruggedized Tube - Yoke - Shield Assembly

Type: WX-31521P- ★

ES Focus & Magnetic Deflection
Line Width = 0.0015″ (0.0381mm)
0.2″ (5mm) x 8″ (203mm) Fiber-Optic Faceplate

Basic Characteristics
0.2″ (5mm) x 8″ (203mm) Fiber-Optic Cylindrical Faceplate
52° Magnetic Deflection
ES Focus

Typical Applications
Character Print Out on Photo-Sensitive Paper

Special Features
Line Width = 0.0015″ (0.0381mm)
Integral Tube - Yoke - Shield Assembly

Electrical

Cathode	Coated Unipotential
Heater:	
Voltage	6.3 Volts
Current	0.60 Ampere
Direct Interelectrode Capacitances:	
Grid 1 to All Other Electrodes	24 pF
Cathode to All Other Electrodes	17 pF
Focusing Method	Electrostatic
Deflection	52° Magnetic
Yoke Characteristics: (Push-Pull Operation)	
Vertical Inductance	3 ± 10% mH
Vertical Resistance (max.)	8.5 Ohms
Horizontal Inductance	3 ± 10% mH
Horizontal Resistance (max.)	8.5 Ohms

Optical

Screen Phosphor	Note 1
Faceplate:	
Configuration	Cylindrical
Glass	Dark Clad Fiber Optic
Numerical Aperture	0.66
Fiber Size (Approx.)	5 Microns

Mechanical

Mounting Position	Any
Net Weight	20 Pounds 9.1 Kilograms

Absolute Maximum Ratings

Anode Voltage (Note 3)	18000 max. Volts
Grid 3 (Focus) Voltage	5000 max. Volts
Grid 2 Voltage	500 max. Volts
Grid 1 Voltage:	
Negative Bias Value	180 max. Volts
Positive Bias Value	0 max. Volts
Positive Peak Value	0 max. Volts
Peak Heater-Cathode Voltage:	
Heater Negative with respect to Cathode:	
During Warm-up Period of 15 Second Maximum	410 max. Volts
After Equipment Warm-up Period	180 max. Volts
Heater Positive with respect to Cathode:	
Peak	180 max. Volts
DC	0 max. Volts
Anode Dissipation (mean)	Watts

Limiting Circuit Values

Grid 1 Circuit Resistance	1.5 max. Megohms
Grid 2 Circuit Resistance (Approx.)	0.5 Megohms
Grid 3 Circuit Resistance	See Note 4

Typical Operating Conditions (Note 2)

Anode Voltage (Note 3)	15000 Volts
Grid 3 (Focus) Voltage	4500 Volts
Grid 3 Current for 2 μA Anode Current (Max.)	500 μA
Grid 2 Voltage	300 Volts
Grid 1 Spot Cutoff Voltage	−35 to −80 Volts
Line Width with P11 (Note 5):	
Center	0.0015 Inch 0.0381 mm
Edge	0.0025 Inch 0.0635 mm
Deflection Sensitivity: (15KV Anode Voltage)	
Vertical	18mA at 0.1″ (2.5mm) ±10%
Horizontal	620mA at 4.0″ (101.6mm) ±10%
Spot Position (Note 6)	4 mm

Environmental Capability

The WX-31521P- will withstand, without damage, all environmental conditions of MIL-E-1F.

Notes

1. Westinghouse Military & Industrial Cathode Ray Tubes can be supplied with most of the standard JEDEC phosphors.
2. All voltages are specified relative to the cathode. Tube MUST be operated with Anode 2 at ground.
3. Operation with voltage in excess of 16KV may require shielding to limit radiation of very soft X-rays.
4. The Grid 3 electrode may draw a peak current of 2 milliamperes with a representative value of 50 microamperes under normal operation.
5. Line width is defined as the distance between the half-amplitude points of the light-energy distribution of the line and is measured with a peak current of 2 microamperes, using the slit-scan technique described in Westinghouse Pub. No. 86-704 (Reprint 5510). Line width with other phosphors may vary slightly. Dynamic focus modulation is necessary to maintain optimum resolution over entire face. Close control of supply regulation and ripple is necessary to ensure optimum focus. Typically, a 0.1% change in focus or anode voltage, from best value, will increase spot size approximately 10%.
6. With the tube shielded against external magnetic fields, the undeflected focused spot lies within a circle of 2mm radius concentric with the faceplate.

★ The WX-number identifies a specific laboratory design; the design and, consequently, the data and type number are subject to change. No obligations are assumed to manufacture this particular device in the future unless otherwise arranged. These drawings and specifications are the property of Westinghouse Electric Corporation, Electronic Tube Division, and shall not be reproduced or copied or used as the basis for the manufacture or sale of apparatus and/or devices without permission.

September 1970
Supersedes TD 86-796 p. 21 dated July 1970
TC−2236-2

Industrial & Military CRT Ruggedized Tube - Yoke - Shield Assembly

Type: WX-31521P-

ES Focus & Magnetic Deflection
Line Width = 0.0015" (0.0381mm)
0.2" (5mm) x 8" (203mm) Fiber-Optic Faceplate

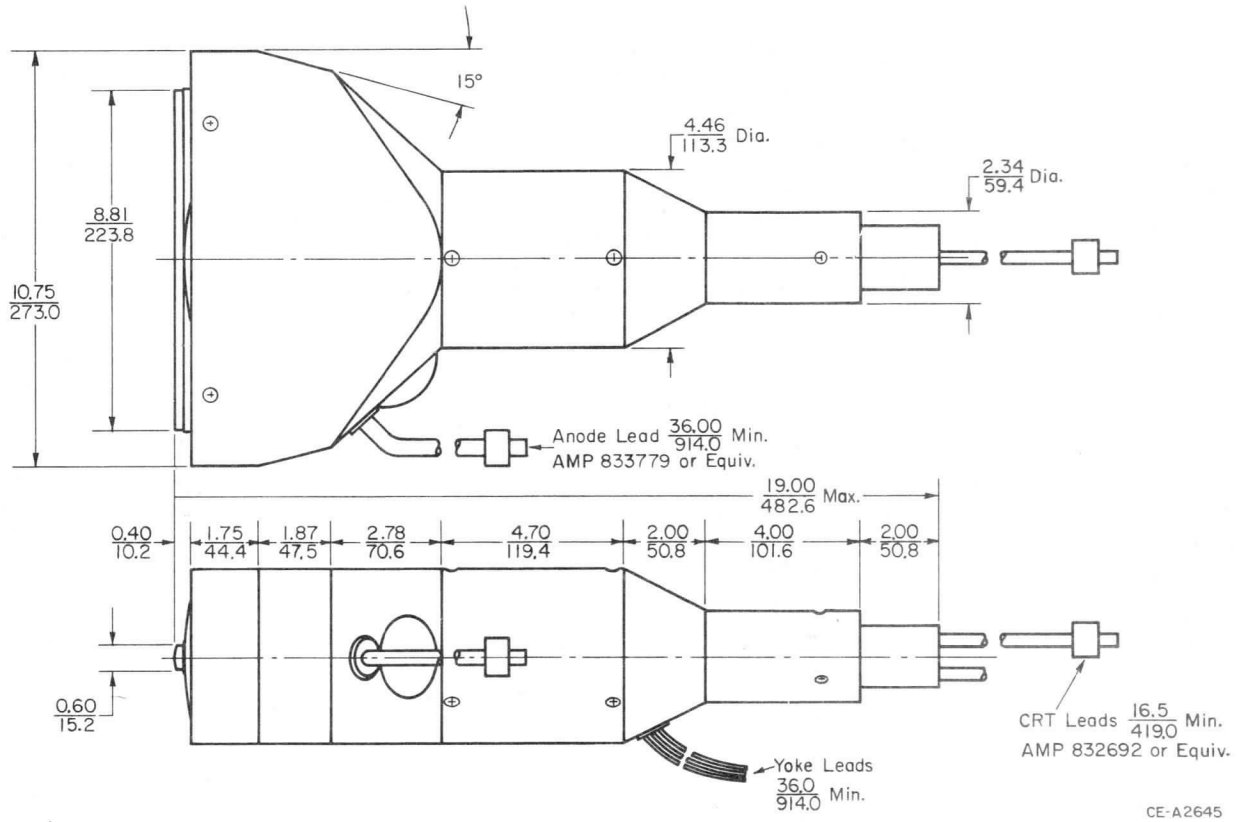

Lead Index

Deflection Yoke Leads

Push - Pull Deflection Coil Data

(+Plus)	(—Neg)	Direction Facing CRT
Blue	Red	Up
White	Brown	Down
Green	Orange	Left
Black	Yellow	Right

Gun Leads

Heater . . . . . Amp 832692 (Brown)
Cathode . . . . . Amp 832692 (White)
Grid 1 . . . . . Amp 832692 (Green)
Grid 2 . . . . . Amp 832692 (Yellow)
Grid 3 (Focus) . . . . Amp 832692 (White)

Bulb Leads

Anode . . . . . Amp 833779

(Dimensions in $\frac{\text{inches}}{\text{mm}}$ unless otherwise shown) The millimeter dimensions are derived from the original inch dimensions, 1" = 25.4 mm exactly.

Westinghouse Electric Corporation
Electronic Tube Division, Elmira, N. Y. 14902
Printed in U.S.A.

Industrial & Military CRT

Westinghouse

Type: WX-31593P-★

8″ (203mm) Rectangular Spherical Faceplate
Line Width = 0.007″ (0.18mm)
90° Magnetic Deflection, Low Voltage Focus

Basic Characteristics
8″ (203mm) Rectangular
90° Magnetic Deflection
Aluminized
1.44″ (36.6mm)

Typical Applications
Alphanumeric Display
Suitable For Dot Matrix
Stroke or Scan Generated Display

Special Features
Line Width = 0.007″ (0.18mm)
Minimum Yoke - Gun Interaction

Electrical

Cathode	Coated Unipotential
Heater:	
Voltage	6.3 Volts
Current	0.6 Ampere
Direct Interelectrode Capacitances:	
Grid 1 to All Other Electrodes	9 pF
Cathode to All Other Electrodes	7 pF
Focusing Method	Electrostatic
Deflection	90° Magnetic

Optical

Screen Phosphor	Note 1
Faceplate:	
Configuration	Spherical
Glass	Neutral Gray
Transmission	92%

Mechanical

Mounting Position	Any
Net Weight	2.5 Pounds
	1.1 Kilograms

Absolute Maximum Ratings

Anode Voltage (Note 2)	22000 max.	Volts
Grid 4 (Focus) Voltage	1000 max.	Volts
Grid 2 Voltage	600 max.	Volts
Grid 1 Voltage:		
Negative Bias Value	180 max.	Volts
Positive Bias Value	0 max.	Volts
Positive Peak Value	0 max.	Volts
Heater-Cathode Voltage:		
Heater Negative with respect to Cathode:		
During Warm-up Period of 15 sec. max.	410 max.	Volts
After Equipment Warm-up	180 max.	Volts
Heater Positive with respect to Cathode:		
Peak	180 max.	Volts
DC	25 max.	Volts

Limiting Circuit Values

Grid 1 Circuit Resistance	1.5 max.	Megohms
Grid 2 Circuit Resistance (Note 3)	0.5 Approx.	Megohms

Typical Operation & Performance

Anode Voltage	15000	Volts
Grid 3 (Focus) Voltage	0 to 400	Volts
Grid 2 Voltage	300	Volts
Grid 1 Spot Cutoff Voltage	−28 to −72	Volts
Maximum Line Width "A" with P31 (Note 4)	0.007	Inch
	0.18	mm
Spot Position (Note 5)	8	mm

Notes

1. Westinghouse Military & Industrial Cathode Ray Tubes can be supplied with most of the standard JEDEC phosphors.
2. Operation with voltage in excess of 16KV may require shielding to limit radiation of very soft x-rays.
3. A grid 2 circuit resistance of approximately 0.5 megohm should be provided. In addition it is recommended that a suitable device be used to limit grid 2 voltage to the maximum rated value to prevent tube damage in case of a momentary arc.
4. Line width is measured by the shrinking raster method with a peak current of 25 micro-amperes. Line width with other phosphors may vary slightly.
5. With the tube shielded against external magnetic fields, the undeflected focused spot lies within a circle of 8 mm radius concentric with the faceplate.

★ The WX-number identifies a specific laboratory design; the design and, consequently, the data and type number are subject to change. No obligations are assumed to manufacture this particular device in the future unless otherwise arranged. These drawings and specifications are the property of Westinghouse Electric Corporation, Electronic Tube Division, and shall not be reproduced or copied or used as the basis for the manufacture or sale of apparatus and/or devices without permission.

September 1970
New Information
TC−2236-2

Industrial & Military CRT

Type: WX-31593P-

8" (203mm) Rectangular Spherical Faceplate
Line Width = 0.007" (0.18mm)
90° Magnetic Deflection, Low Voltage Focus

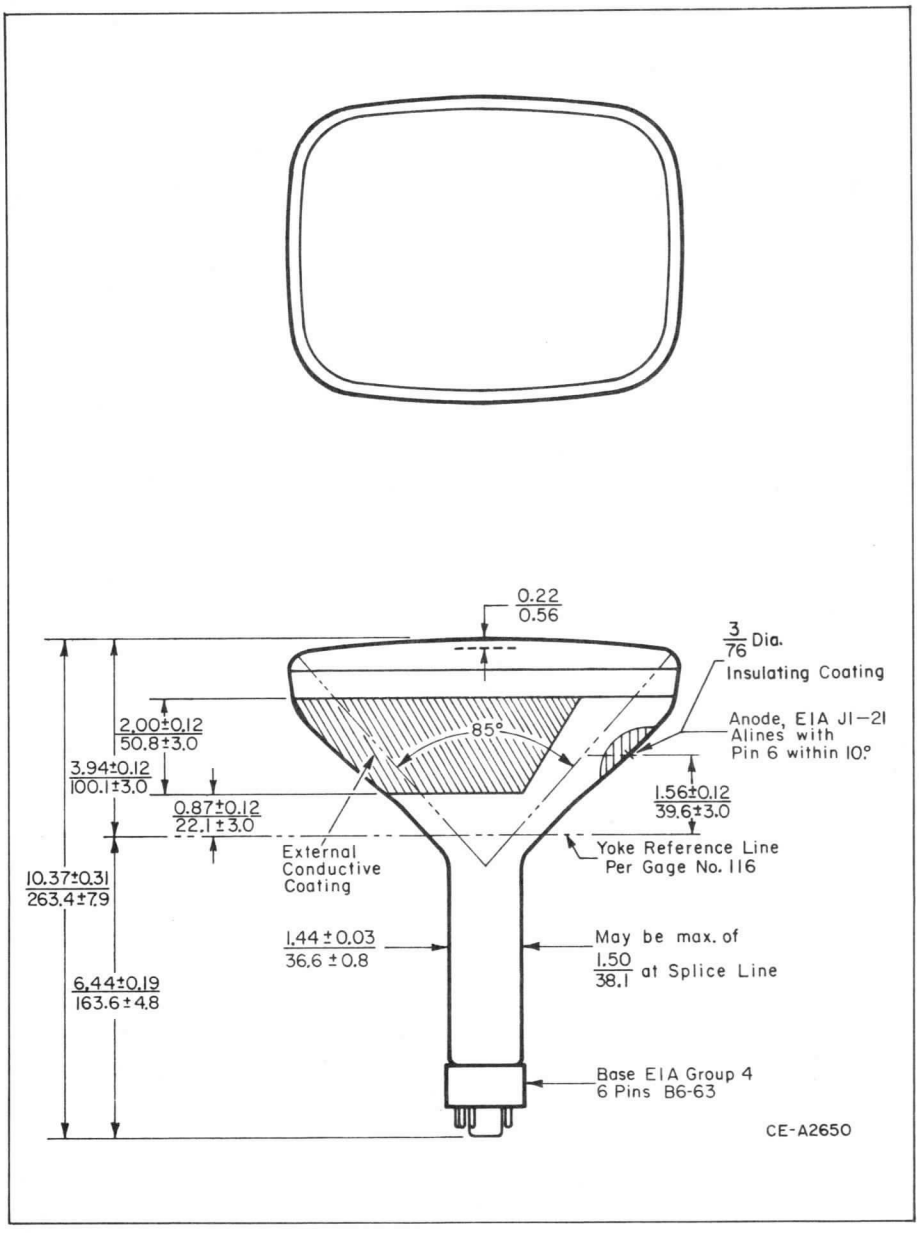

Item	Diag.	Horiz.	Vert.
Bulb Dimension	8.44 214.4	7.87 199.9	6.06 153.9
Tolerance on Bulb Dim. is	+0.06 −0.03 +1.5 −0.8		
Minimum Screen	7.81 198.3	7.19 182.6	5.37 136.4
Deflection Angle	90°	85°	68°

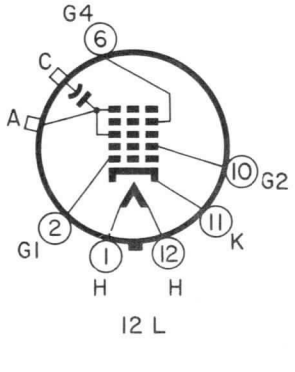

(Dimensions in inches/mm unless otherwise shown) The millimeter dimensions are derived from the original inch dimensions, 1" = 25.4 mm exactly.

Westinghouse Electric Corporation
Electronic Tube Division, Elmira, N. Y. 14902
Printed in U.S.A.

Westinghouse

Industrial & Military CRT Ruggedized Tube - Yoke - Shield Assembly

Type: WX-31679P-★

Magnetic Focus & Deflection
Line Width = 0.0015″ (0.0381mm)
Fiber-Optic Faceplate
0.2″ (5mm) x 8″ (203mm) Useful Screen Area
Dynamic Focus Correction

Basic Characteristics

0.2″ (5mm) x 8″ (203mm) Fiber-Optic Cylindrical Faceplate
52° Magnetic Deflection
Magnetic Focus

Typical Applications

Character Print Out on Photo-Sensitive Paper

Special Features

Line Width = 0.0015″ (0.0381mm)
Integral Tube - Yoke - Shield Assembly
Dynamic Focus Correction

Electrical

Cathode	Coated Unipotential
Heater:	
Voltage	6.3 Volts
Current	0.60 Ampere
Direct Interelectrode Capacitances:	
Grid 1 to All Other Electrodes	24 pF
Cathode to All Other Electrodes	17 pF
Focusing Method	Magnetic
Focus Coil:	
Static Coil Resistance	16 Ohms
Dynamic Coil:	
Resistance	4 Ohms
Inductance	1.0 mH
Deflection	52° Magnetic
Yoke Characteristics: (Single-Ended Operation)	
Vertical Inductance	0.025 mH
Vertical Resistance (max.)	0.4 Ohms
Horizontal Inductance	0.5 mH
Horizontal Resistance (max.)	0.9 Ohms

Optical

Screen Phosphor	Note 1
Faceplate:	
Configuration	Cylindrical
Glass	Dark Clad Fiber Optic
Numerical Aperture	0.66
Fiber Size	5 Microns

Mechanical

Mounting Position	Any
Net Weight	25 Pounds 11.4 Kilograms

Absolute Maximum Ratings

Anode Voltage (Note 3)	22000 max. Volts
Grid 2 Voltage	2500 max. Volts
Grid 1 Voltage:	
Negative Bias Value	180 max. Volts
Positive Bias Value	0 max. Volts
Positive Peak Value	0 max. Volts
Peak Heater-Cathode Voltage:	
Heater Negative with respect to Cathode:	
During Warm-up Period of 15 Second Maximum	410 max. Volts
After Equipment Warm-up Period	180 max. Volts
Heater Positive with respect to Cathode:	
Peak	180 max. Volts
DC	0 max. Volts
Anode Dissipation (mean)	2 max. Watts

Limiting Circuit Values

Grid 1 Circuit Resistance	1.5 max. Megohms
Grid 2 Circuit Resistance (Approx.)	0.5 Megohms

Typical Operating Conditions (Note 2)

Anode Voltage (Note 3)	20000 Volts
Static Focus Current	375 mA
Dynamic Focus Current at 4″ (101.6mm)	300 mA
Grid 2 Voltage	2000 Volts
Grid 1 Spot Cutoff Voltage	−35 to −80 Volts
Line Width with P31 (Note 5):	
Center	0.0015 Inch 0.0381 mm
Edge	0.0025 Inch
Deflection Current: (20KV Anode Voltage)	
Vertical	0.2A ±10% for 0.1″ (2.5mm)
Horizontal	1.6A ±10% for 4.0″ (101.6mm)
Spot Position (Note 6)	4 mm

Environmental Capability

The WX-31679P- will withstand, without damage, all environmental conditions of MIL-E-1F.

Notes

1. Westinghouse Military & Industrial Cathode Ray Tubes can be supplied with most of the standard JEDEC phosphors.
2. All voltages are specified relative to the cathode. Tube MUST be operated with Anode 2 at ground.
3. Operation with voltage in excess of 16KV may require shielding to limit radiation of very soft X-rays.
4. The Anode may draw a peak current of 2 milliamperes with a representative value of 50 microamperes under normal operation.
5. Line width is defined as the distance between the half-amplitude points of the light-energy distribution of the line and is measured with a peak current of 1 microampere, using the slit-scan technique described in Westinghouse Pub. No. 86-704 (Reprint 5510). Line width with other phosphors may vary slightly. Dynamic focus modulation is necessary to maintain optimum resolution over entire face. Close control of supply regulation and ripple is necessary to ensure optimum focus. Typically, a 0.1% change in focus or anode voltage, from best value, will increase spot size approximately 10%.
6. With the tube shielded against external magnetic fields, the undeflected focused spot lies within a circle of 1mm radius concentric with the faceplate.

March 1971
New Information
TC−2236-2

Industrial & Military CRT Ruggedized Tube - Yoke - Shield Assembly

Type: WX-31679P-

Magnetic Focus & Deflection
Line Width = 0.0015" (0.0381mm)
Fiber-Optic Faceplate
0.2" (5mm) x 8" (203mm) Useful Screen Area
Dynamic Focus Correction

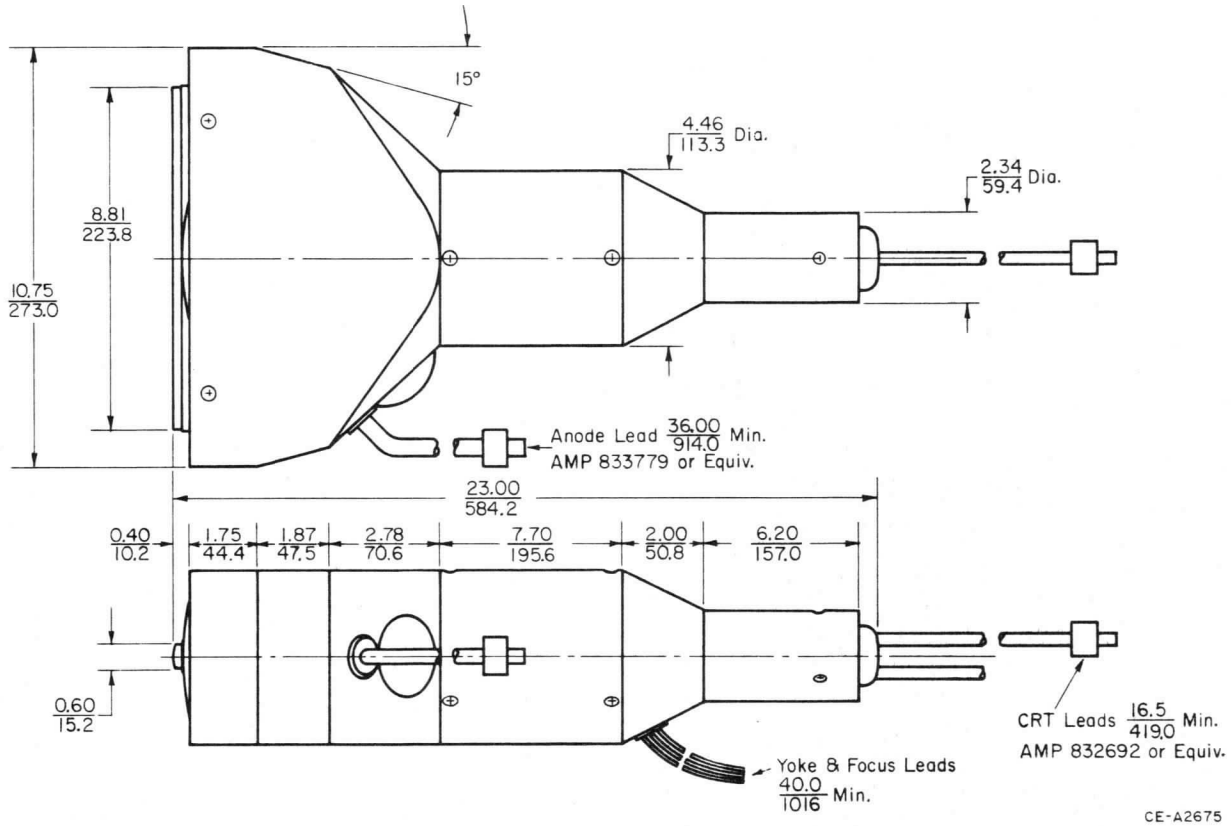

Lead Index

Deflection Yoke Leads

Single-Ended Deflection Coil Data

(+Plus)	Connect	(−Neg)	Direction Facing CRT
Blue . . .	White-Red	Brown . . .	Up
Green . .	Black-Orange . .	Yellow . . .	Left

Focus Coil Leads

Static Coil:
Red +, Brown −
Dynamic Coil:
Orange +, Yellow −

Gun Leads

Heater . . . . . Amp 832692 (Brown)
Cathode . . . . . Amp 832692 (White
Grid 1 . . . . . Amp 832692 (Green)
Grid 2 . . . . . Amp 832692 (Yellow)

Bulb Leads

Anode . . . . . Amp 833779

★ The WX-number identifies a specific laboratory design; the design and, consequently, the data and type number are subject to change. No obligations are assumed to manufacture this particular device in the future unless otherwise arranged. These drawings and specifications are the property of Westinghouse Electric Corporation, Electronic Tube Division, and shall not be reproduced or copied or used as the basis for the manufacture or sale of apparatus and/or devices without permission.

(Dimensions in inches / mm unless otherwise shown) The millimeter dimensions are derived from the original inch dimensions, 1" = 25.4 mm exactly.

Westinghouse Electric Corporation
Electronic Tube Division, Elmira, N. Y. 14902
Printed in U.S.A.

Westinghouse

Industrial & Military CRT Ruggedized Tube - Yoke - Shield Assembly

Type: WX-31717P- ★

ES Focus & Magnetic Deflection
Line Width = 0.0007" (0.018mm)
0.2" (5mm) x 8" (203mm) Fiber-Optic Faceplate

Basic Characteristics
0.2" (5mm) x 8" (203mm) Fiber-Optic Cylindrical Faceplate
52° Magnetic Deflection
ES Focus

Typical Applications
Character Print Out
on
Photo-Sensitive Paper

Special Features
Line Width = 0.0007" (0.018mm)
Integral Tube - Yoke - Shield Assembly
Dynamic Astigmatism Correction

Electrical

Cathode	Coated Unipotential
Heater:	
Voltage	6.3 Volts
Current	0.60 Ampere
Direct Interelectrode Capacitances:	
Grid 1 to All Other Electrodes	24 pF
Cathode to All Other Electrodes	17 pF
Focusing Method	Electrostatic
Deflection	52° Magnetic
Yoke Characteristics: (Push-Pull Operation)	
Vertical Inductance	3 ± 10% mH
Vertical Resistance (max.)	8.5 Ohms
Horizontal Inductance	3 ± 10% mH
Horizontal Resistance (max.)	8.5 Ohms
Dynamic Astigmatism Coils:	
Resistance	1 Ohm
Inductance:	
Coil 1	0.17 mH
Coil 2	0.26 mH

Optical

Screen Phosphor	Note 1
Faceplate:	
Configuration	Cylindrical
Glass	Dark Clad Fiber Optic
Numerical Aperture	0.66
Fiber Size (Approx.)	5 Microns

Mechanical

Mounting Position	Any
Net Weight	21 Pounds 9.1 Kilograms

Absolute Maximum Ratings

Anode Voltage (Note 3)	18000 max. Volts
Grid 3 (Focus) Voltage	5000 max. Volts
Grid 2 Voltage	700 max. Volts
Grid 1 Voltage:	
Negative Bias Value	180 max. Volts
Positive Bias Value	0 max. Volts
Positive Peak Value	0 max. Volts
Peak Heater-Cathode Voltage:	
Heater Negative with respect to Cathode:	
During Warm-up Period of 15 Second Maximum	410 max. Volts
After Equipment Warm-up Period	180 max. Volts
Heater Positive with respect to Cathode:	
Peak	180 max. Volts
DC	0 max. Volts
Grid 2 Dissipation (mean)	2 max. Watts

Limiting Circuit Values

Grid 1 Circuit Resistance	1.5 max. Megohms
Grid 2 Circuit Resistance (Approx.) (Note 4)	10000 max. Ohms

Typical Operating Conditions (Note 2)

Anode Voltage (Note 3)	15000 Volts
Grid 3 (Focus) Voltage	3200 Volts
Grid 2 Current for 0.5 μA Anode Current (max.)	500 μA
Grid 2 Voltage	500 Volts
Grid 1 Spot Cutoff Voltage	−35 to −80 Volts
Line Width with P11 (Note 5):	
Center	0.0007 Inch
	0.018 mm
Edge	0.00075 Inch
	0.0191 mm
Deflection Sensitivity: (15KV Anode Voltage)	
Vertical	18mA at 0.1" (2.5mm) ±10%
Horizontal	620mA at 4.0" (101.6mm) ±10%
Spot Position (Note 6)	4 mm
Astigmatism Correction (Typical @ 4" (102mm) Deflection)	20 - 50 mA

Environmental Capability

The WX-31717P- will withstand, without damage, all environmental conditions of MIL-E-1F.

Notes

1. Westinghouse Military & Industrial Cathode Ray Tubes can be supplied with most of the standard JEDEC phosphors.
2. All voltages are specified relative to the cathode. Tube MUST be operated with Anode 2 at ground.
3. Operation with voltage in excess of 16KV may require shielding to limit radiation of very soft X-rays.
4. The Grid 2 electrode may draw a peak current of 2 milliamperes with a representative value of 500 microamperes under normal operation.
5. Line width is defined as the distance between the half-amplitude points of the light-energy distribution of the line and is measured with a peak current of 0.5 microamperes, using the slit-scan technique described in Westinghouse Pub. No. 86-704 (Reprint 5510). Line width with other phosphors may vary slightly. Dynamic focus modulation is necessary to maintain optimum resolution over entire face. Close control os supply regulation and ripple is necessary to ensure optimum focus. Typically, a 0.1% change in focus or anode voltage, from best value, will increase spot size approximately 10%.
6. With the tube shielded against external magnetic fields, the undeflected focused spot lies within a circle of 4mm radius concentric with the faceplate.

★ The WX-number identifies a specific laboratory design; the design and, consequently, the data and type number are subject to change. No obligations are assumed to manufacture this particular device in the future unless otherwise arranged. These drawings and specifications are the property of Westinghouse Electric Corporation, Electronic Tube Division, and shall not be reproduced or copied or used as the basis for the manufacture or sale of apparatus and/or devices without permission.

January 1971
New Information
TC−2236-2

Industrial & Military CRT
Ruggedized Tube - Yoke - Shield Assembly

Type: WX-31717P-

ES Focus & Magnetic Deflection
Line Width = 0.0007" (0.018mm)
0.2" (5mm) x 8" (203mm) Fiber-Optic Faceplate

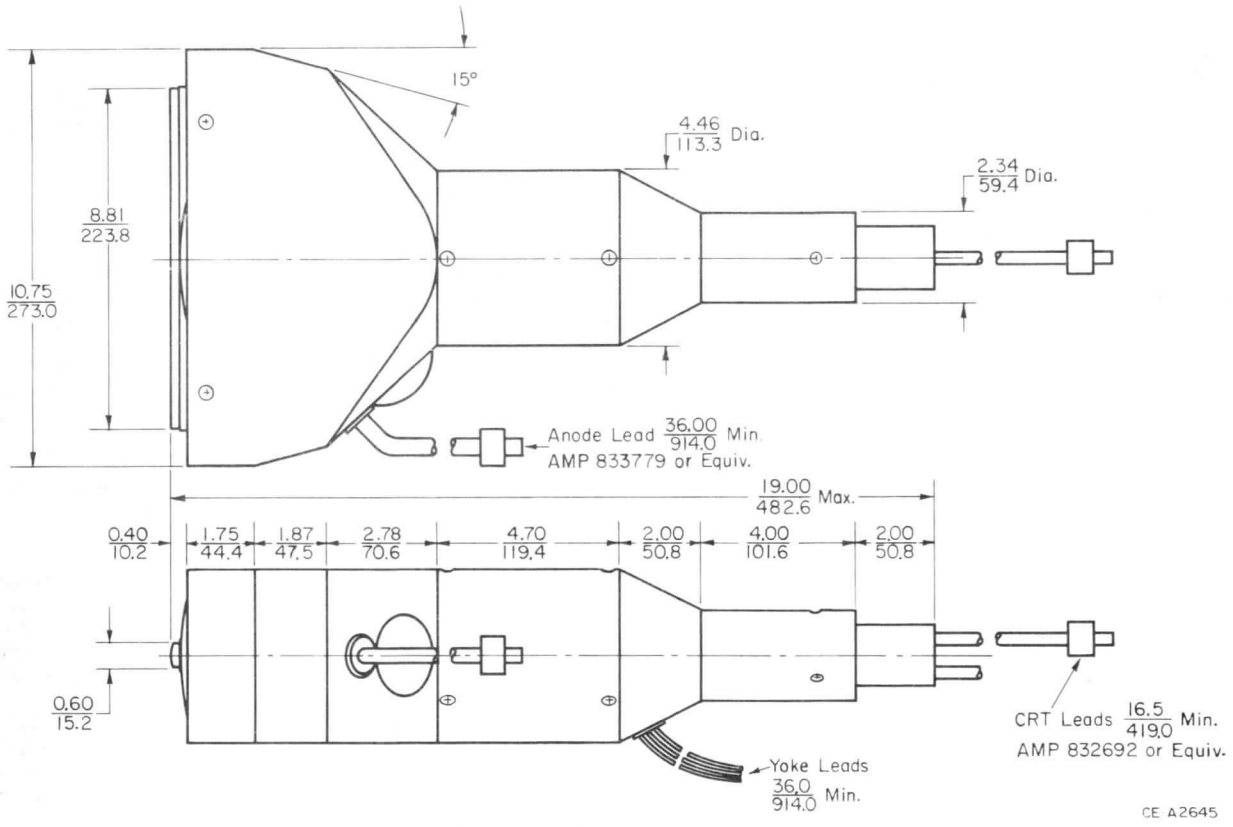

Lead Index

Deflection Yoke Leads

Push - Pull Deflection Coil Data

(+Plus)	(—Neg)	Direction Facing CRT
Blue	Red	Up
White	Brown	Down
Green	Orange	Left
Black	Yellow	Right

Dynamic Astigmation Coil Leads

Coil 1:
White +, Yellow —
Coil 2:
Red +, Green —

Gun Leads

Heater	Amp 832692 (Brown)
Cathode	Amp 832692 (White)
Grid 1	Amp 832692 (Green)
Grid 2	Amp 832692 (Yellow)
Grid 3 (Focus)	Amp 832692 (Red)

Bulb Leads

Anode	Amp 833779

(Dimensions in inches / mm unless otherwise shown) The millimeter dimensions are derived from the original inch dimensions, 1" = 25.4 mm exactly.

Westinghouse Electric Corporation
Electronic Tube Division, Elmira, N. Y. 14902
Printed in U.S.A.

Westinghouse

Industrial & Military CRT

Type: WX-31763P-★

5.25″ (133mm) Round Flat Faceplate
Line Width = 0.0015″ (0.04mm)
42° Magnetic Deflection, ES Focus

Basic Characteristics
5.25″ (133mm) Round Flat Faceplate
Electrostatic Focus
42° Magnetic Deflection
Aluminized Screen

Typical Applications
Photographic Recording
Flying Spot Scanning

Special Features
Line Width = 0.0015″ (0.04mm)

Electrical

Cathode	Coated Unipotential
Heater:	
Voltage	6.3 Volts
Current	0.6 Ampere
Direct Interelectrode Capacitances:	
Grid 1 to All Other Electrodes	9 pF
Grid 2 to All Other Electrodes	7 pF
Cathode to All Other Electrodes	7 pF
Focusing Method	Electrostatic
Deflection	42° Magnetic

Optical

Screen Phosphor	Note 1
Faceplate:	
Configuration (Note 2)	Flat
Glass	Clear, Non-Browning
Transmission	91%
Index of Refraction	1.52

Mechanical

Mounting Position	Any
Net Weight	2.5 Pounds
	1.1 Kilograms

Maximum Ratings
Absolute Maximum Values

Anode Voltage	12500 max. Volts
Grid 3 (Focus) Voltage (Note 3)	5000 max. Volts
Grid 2 Volts	600 max. Volts
Grid 1 Volts:	
Negative Bias Value	150 max. Volts
Positive Bias Value	0 max. Volts
Positive Peak Value	0 max. Volts
Peak Heater-Cathode Voltage:	
Heater Negative with respect to Cathode:	
During Warm-up Period of 15 sec. max.	410 max. Volts
After Equipment Warm-up Period	180 max. Volts
Heater Positive with respect to Cathode:	
Peak	180 max. Volts
DC	0 max. Volts

Limiting Circuit Values

Grid 1 Circuit Resistance	1.5 max. Megohms
Grid 2 Circuit Resistance	See Note 4

Typical Operation & Performance

Anode Voltage	10000 Volts
Grid 3 (Focus) Voltage (Note 3)	2300 to 2600 Volts
Grid 2 Voltage	300 Volts
Grid 1 Spot Cutoff Voltage	−40 to −70 Volts
Line Width (Note 5) with P-11	0.0015 Inch
	0.04 mm
Spot Position (Note 6)	7.5 mm

TYPICAL GRID-DRIVE CHARACTERISTIC

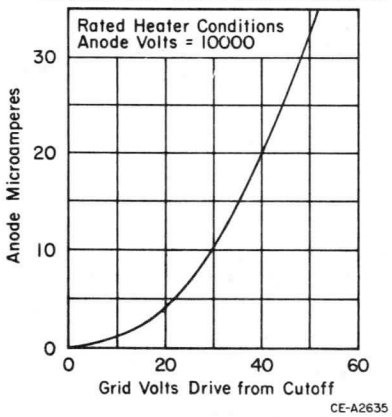

Notes

1. Westinghouse Military & Industrial Cathode Ray Tubes can be supplied with most of the standard JEDEC phosphors.
2. The faceplate is a ground and polished flat plate 0.245″ (6.22mm) ±0.005″ (0.13mm) thick with a maximum deviation from mean thickness for individual plate of 0.001″ (0.03mm). Maximum deviation from flatness is 0.006″ (0.15mm) within a circle of 4.25″ (108mm) diameter centered on the tube axis.
3. The grid 3 electrode may draw a peak current of 2 milliamperes with a representative value of 300 microamperes under normal operation.
4. A grid 2 circuit resistance of approximately 0.5 megohm should be provided. In addition it is recommended that a suitable device be used to limit grid 2 voltage to the maximum rated value to prevent tube damage in case of momentary arc.
5. Line width is defined as the distance between the half-amplitude points of the light-energy distribution of the line and is measured with a peak current of 2.5 microamperes, using the slit-scan technique described in publication 86-704 (Westinghouse reprint #5510). Line width with other phosphors may vary slightly. Dynamic focus modulation is necessary to maintain optimum resolution over entire face. Close control of supply regulation and ripple is necessary to ensure optimum focus. Typically, a 0.1% change in focus or anode voltage, from best value, will increase spot size approximately 10%.
6. With the tube shielded against external magnetic fields, the undeflected focused spot lies within a circle of 7.5mm radius concentric with the faceplate.

★ The WX-number identifies a specific laboratory design; the design and, consequently, the data and type number are subject to change. No obligations are assumed to manufacture this particular device in the future unless otherwise arranged. These drawings and specifications are the property of Westinghouse Electric Corporation, Electronic Tube Division, and shall not be reproduced or copied or used as the basis for the manufacture or sale of apparatus and/or devices without permission.

November 1970
New Information
TC−2236-2

Industrial & Military CRT

Type: WX-31763P-

5.25″ (133mm) Round Flat Faceplate
Line Width = 0.0015″ (0.04mm)
42° Magnetic Deflection, ES Focus

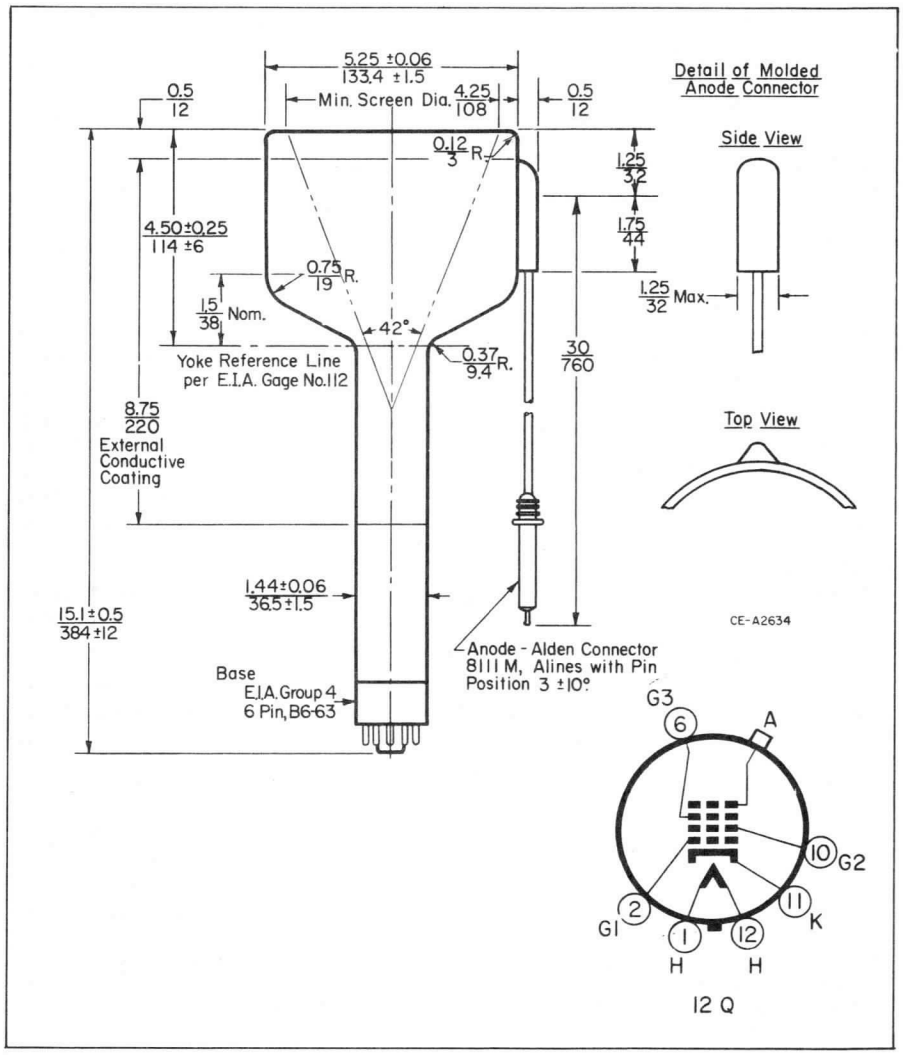

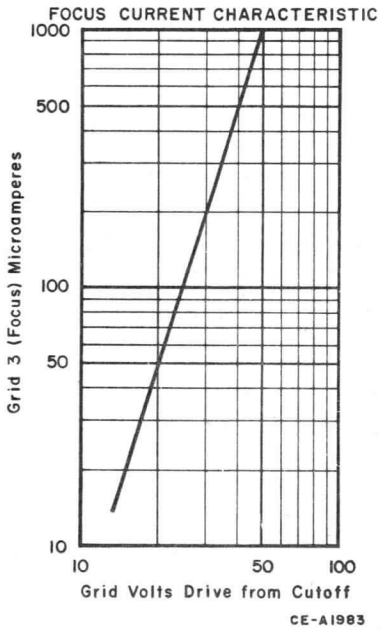

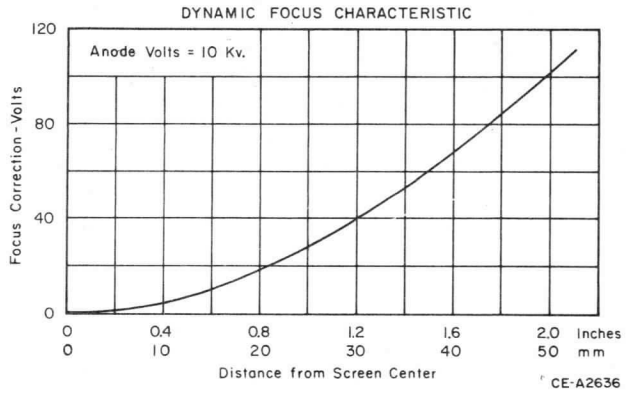

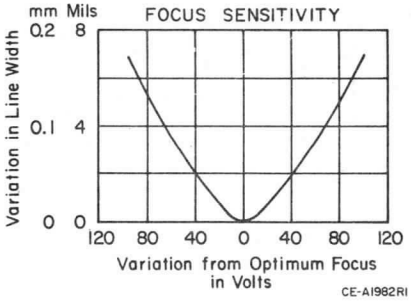

(Dimensions in inches/mm unless otherwise shown) The millimeter dimensions are derived from the original inch dimensions, 1″ = 25.4 mm exactly.

Westinghouse Electric Corporation
Electronic Tube Division, Elmira, N. Y. 14902
Printed in U.S.A.

Westinghouse

Industrial & Military CRT

Type: WX-31768P-★

Magnetic Deflection, ES Focus
Line Width = 0.00075″ (0.019mm)
8″ x 0.2″ (203.2mm x 5.1mm) Useful Screen
Fiber Optic Faceplate

Basic Characteristics
8″ x 0.2″ (203.2mm x 5.1mm)
Fiber Optic Faceplate
52° Magnetic Deflection
Electrostatic Focus

Typical Applications
Photographic Recording

Special Features
0.00075″ (0.019mm) Line Width

Electrical

Cathode	Coated Unipotential
Heater:	
Voltage	6.3 Volts
Current	0.60 Ampere
Direct Interelectrode Capacitances:	
Grid 1 to All Other Electrodes	10 pF
Grid 2 to All Other Electrodes	10 pF
Cathode to All Other Electrodes	8 pF
Focusing Method	Electrostatic
Deflection	52° Magnetic

Optical

Screen Phosphor	Note 1
Faceplate:	
Configuration	Cylindrical
Glass	Dark Clad Fiber Optic
Numerical Aperture	0.66
Fiber Size (Approx.)	5μ

Mechanical

Mounting Position	Any
Net Weight	4.4 Pounds 2 Kilograms

Absolute Maximum Ratings

Anode Voltage (Notes 2 & 3)	18000 max.	Volts
Grid 3 (Focus) Voltage	4000 max.	Volts
Grid 2 Voltage (Note 4)	600 max.	Volts
Grid 1 Voltage:		
Negative Bias Value	180 max.	Volts
Positive Bias Value	0 max.	Volts
Positive Peak Value	0 max.	Volts
Heater-Cathode Voltage:		
Heater Negative with respect to Cathode:		
During warm-up period of 15 seconds maximum	410 max.	Volts
After Equipment warm-up period	180 max.	Volts
Heater Positive with respect to Cathode:		
Peak	180 max.	Volts
DC	25 max.	Volts

Limiting Circuit Values

Grid 1 Circuit Resistance	1.5 max.	Megohms
Grid 2 Circuit Resistance	10000 max.	Ohms

Typical Operating Conditions & Performance

Anode Voltage (Notes 2 & 3)	15000	Volts
Grid 3 (Focus) Voltage	3000 to 3600	Volts
Grid 2 Voltage (Note 4)	500	Volts
Grid 1 Spot Cutoff Voltage	−40 to −70	Volts
Line Width "A" with P11 at 0.5μA (Note 5)	0.00075	Inch
	0.0190	mm
Spot Position (Note 6)	4	mm

Notes

1. Westinghouse Military & Industrial Cathode Ray Tubes can be supplied with most of the standard JEDEC phosphors.
2. Tube is intended for operation only with grounded anode.
3. Operation with voltage in excess of 16KV may require shielding to limit radiation of very soft X-rays.
4. The grid 2 electrode may draw a peak current of 2 milliamperes with a representative value of 500 microamperes under normal operation.
5. Line width is defined as the distance between the half-amplitude points of the light-energy distribution of the line and is measured with a peak current of 0.5 microampere, using the slit-scan technique described in Westinghouse Pub. No. 86-704 (Reprint 5510). Line width with other phosphors may vary slightly. Dynamic focus modulation is necessary to maintain optimum resolution over entire face. Close control of supply regulation and ripple is necessary to ensure optimum focus. Typically, a 0.1% change in focus or anode voltage, from best value, will increase spot size approximately 10%.
6. With the tube shielded against external magnetic fields, the undeflected focused spot lies within a circle of 4 mm radius concentric with the faceplate.

★ The WX-number identifies a specific laboratory design; the design and, consequently, the data and type number are subject to change. No obligations are assumed to manufacture this particular device in the future unless otherwise arranged. These drawings and specifications are the property of Westinghouse Electric Corporation, Electronic Tube Division, and shall not be reproduced or copied or used as the basis for the manufacture or sale of apparatus and/or devices without permission.

October 1970
New Information
TC—2236-2

Industrial & Military CRT

Type: WX-31768P-

Magnetic Deflection, ES Focus
Line Width = 0.00075" (0.019mm)
8" x 0.2" (203.2mm x 5.1mm) Useful Screen
Fiber Optic Faceplate

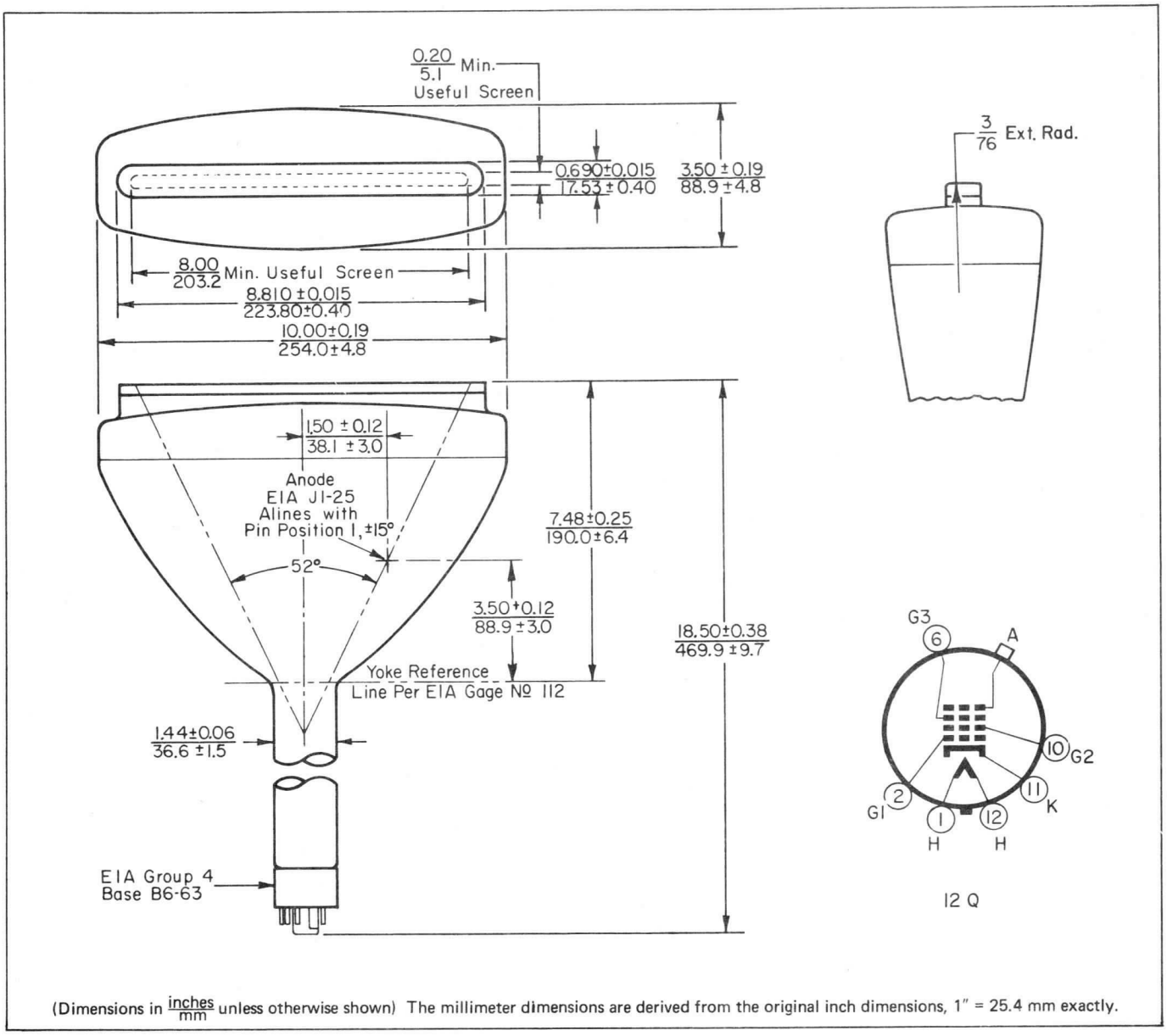

(Dimensions in inches / mm unless otherwise shown) The millimeter dimensions are derived from the original inch dimensions, 1" = 25.4 mm exactly.

Westinghouse Electric Corporation
Electronic Tube Division, Elmira, N. Y. 14902
Printed in U.S.A.

Image Orthicons



by

Westinghouse

WESTINGHOUSE ELECTRONIC TUBE DIVISION
ELMIRA NEW YORK

Quick Reference

IMAGE ORTHICONS

TUBE NUMBER	CATHODE		MAXIMUM VOLTAGE RATINGS		MAX. USABLE IMAGE DIAGONAL INCHES	MIN. □ ILLUMINATION FOR 200 T.V. LINES	MIN. □ ILLUMINATION FOR 400 T.V. LINES	MAX. OVERALL LENGTH INCHES	MAX. DIAMETER INCHES	SPECTRAL RESPONSE		SPECIAL FEATURES & COMMENTS
	VOLTS	AMPS.	ANODE VOLTS	PHOTO-CATHODE VOLTS						PEAK Å	1% Å	
WL-5820/ WL-5820A	6.3	0.6	1350	550	1.8	7×10^{-5}	5×10^{-4}	15-7/16	3-1/16	4500	7500	Standard I.O. used for T.V. Broadcast.
WL-6849	6.3	0.6	1350	550	1.8	3×10^{-5}	5×10^{-4}	15-7/16	3-1/16	4500	7500	Wide-spaced 5820.
WL-7198	6.3	0.6	1350	650	1.8	3×10^{-5}	5×10^{-4}	15-7/16	3-1/16	4500	7500	Ruggedized 5820 (will meet environmental conditions per Mil-5272-A.
WL-7198A	6.3	0.6	1350	650	1.8	7×10^{-5}	5×10^{-4}	15-7/16	3-1/16	4500	7500	Military Ruggedized WL-7198 with long life.
WL-7611	6.3	0.6	1350	650	1.8	7×10^{-5}	5×10^{-4}	15-7/16	3-1/16	4500	7500	Direct replacement for 5820 with long life target-essentially free of image retention & target burn throughout life.
WL-22674	6.3	0.6	1350	550	1.8	7×10^{-5}	5×10^{-4}	15-7/16	3-1/16	4500	7500	long life-field mesh I.O.
WL-22721	6.3	0.6	1350	550	1.8	2×10^{-6}	2.5×10^{-5}	15-7/16	3-1/16	4500	7500	Thin film target-factor of 10-15 more sensitive than 5820 at low light levels.
WL-22722	6.3	0.6	1350	550	1.8	3×10^{-7}	4×10^{-6}	15-7/16	3-1/16	4250	8250	Thin film target S-20 (tri-alkali) photosurface factor of 50 more sensitive than 5820 at low light levels.

WL-22723	6.3	0.6	1850	650	1.8	2×10^{-6}	2.5×10^{-5}	15-7/16	3-1/16	4500	7500	Ruggedized (capable of meeting 7198 spec.) thin film target-factor of 10-15 more sensitive than 5820 at low light levels.
WL-22724	6.3	0.6	1850	650	1.8	3×10^{-7}	4×10^{-6}	15-7/16	3-1/16	4250	8250	Ruggedized S-20 thin film target-factor of 10-15 more sensitive than 5820 at low light levels.
WL-22727	6.3	0.6	1350	550	1.8	7×10^{-5}	5×10^{-4}	15-7/16	3-1/16	4500	7500	T.V. Broadcast I.O. field mesh-improved shading & landing-defocused dynode No. 1 improved black-white transition improved corner focus.
WL-22730	6.3	0.6	1350	550	1.8	3×10^{-7}	4×10^{-6}	15-7/16	3-1/16	 3800	50% 2500 6000	U.V. sensitive, ruggedized (capable of meeting 7198 spec.) thin film target.
WL-22731	6.3	0.6	1350	550	1.8	2×10^{-6}	1.0×10^{-5}	15-7/16	3-1/16	3800	–	U.V. sensitive S-10 surface thin film target.
WL-22732	6.3	0.6	1350	550	1.8	2×10^{-6}	1.0×10^{-5}	15-7/16	3-1/16	3800	–	Ruggedized U.V. sensitive S-10.
WL-22733	6.3	0.6	1350	550	1.8	3×10^{-7}	2×10^{-6}	15-7/16	3-1/16	– 3800	50% 2500 6000	Standard S-20 U.V. sensitive I.O.
WX-4299	6.3	0.6	2200	1st 12-15KV 2nd 800	1.6	1×10^{-8} (Average)	2×10^{-7} (Average)	23-3/8	3-5/8	4250	8250	Ruggedized Image Intensifier I.O. 6 Dynodes-factor of 700 more sensitive at low light levels than 5820
WX-4861	6.3	0.6	1350	550	1.8	3×10^{-7}	4×10^{-6}	15-7/16	3-1/16	 3800	50% 2500 6000	similar to WL-22722 with field mesh.
WX-4904	6.3	0.6	1350	550	1.8	7×10^{-5}	5×10^{-4}	15-7/16	3-1/16	4500	7500	Commercially ruggedized close spaced I.O. Broadcast Quality

□ For 100% contrast scene.

Electronic Components Sales Offices

WEST COAST

City and State	Address	Phone
Arcadia, Cal.	129 So. First Avenue	HI 6-4411
Compton, Cal.	18020 So. Santa Fe Avenue	NF 8-7781
Los Angeles, Cal.	600 St. Paul Avenue	HU 2-9660
Phoenix, Arizona	1102 N. 21st Ave., Box 6144	254-5231
Portland, Oregon	1414 N.E. Grand Ave., Box 7965	AT 8-6311
Salt Lake City, Utah	1680 So. Redwood Road	EL 5-3413
San Diego, Cal.	1365 Sixth Avenue	BE 4-4651
San Francisco, Cal.	410 Bush Street	EX 2-5353
Seattle, Washington	3451 E. Marginal Way, South	MA 2-0808
Sunnyvale, Cal.	Bldg. 73, Hendy Avenue	RE 9-5840
Van Nuys, Cal.	15217 Burbank Blvd.	ST 2-9823

MIDWEST

Chicago, Ill.	Merchandise Mart Plaza, Box 3426	WH 4-3860
Dallas, Texas	1232 Fidelity Union Life Bldg., 1511 Bryan St.	RI 8-0711
Denver, Colo.	55 West Fifth Avenue	KE 4-8121
Detroit, Mich.	5757 Trumbull Avenue	TR 2-7010
Houston, Texas	507 Dallas Avenue	224-7791
Indianapolis, Ind.	1560 Stadium Drive	ME 2-3301
Kansas City, Mo.	Mulberry at 13th Street	HA 1-7122
Milwaukee, Wis.	538 N. Broadway	BR 6-1800
Minneapolis, Minn.	3501 S. Highway 100	WA 7-6551
New Orleans, La.	400 N. Carrollton Ave., Box 19657	486-6141
Rockford, Ill.	2121 15 St.	398-3591
St. Louis, Mo.	411 N. 7th St.	GA 1-6911
Tulsa, Oklahoma	703 Enterprise Bldg.	DI 3-3191

EAST

Atlanta, Ga.	1299 Northside Dr., N.W., Box 4808	TR 4-1642
Baltimore, Md.	501 St. Paul Place	PL 2-0300
Bluefield, W. Va.	704 Bland St., Box 4295	325-7215
Boston, Mass.	10 High Street	LI 2-0600
Bridgeport, Conn.	540 Grant Street	ED 4-5161
Buffalo, N.Y.	Ellicott Square Building	TL 4-3966
Charlotte, N.C.	2001 W. Morehead St.	FR 7-3471
Cincinnati, Ohio	Gwynne Building	421-2250
Cleveland, Ohio	Illuminating Bldg., 55 Public Square	CH 1-7600
Columbus, Ohio	940 Williams Avenue	BR 9-7311
Dayton, Ohio	32 No. Main St.	BA 6-2511
Erie, Penn.	1007 Hess Ave., Box 2003	CL 2-4867
Hartford, Conn.	119 Ann Street	CH 6-5441
Huntsville, Ala.	220 Elec. Serv. Ctr., 112-118 Gallatin St.	JE 4-6447
Johnson City, N.Y.	4301 Old Vestal Rd., Box 148	RA 9-2258
Mineola, N.Y.	1501 Franklin Ave.	CH 8-9800
Newark, N.J.	1180 Raymond Blvd.	HU 4-3000
New York, N.Y.	40 Wall St.	WH 3-4321
Olean, N.Y.	Exchange Natl. Bk. Bldg., 201 N. Union St.	OLean 2-2184
Orlando, Fla.	367 N. Orange Ave., Box 1826	241-2091
Philadelphia, Penn.	3001 Walnut St.	EV 2-1200
Pittsburgh, Penn.	306 Fourth Ave., Box 1017	EX 1-2800
Red Bank, N.J.	Hamilton Bldg., 43 W. Front St.	SH 7-5800
St. Petersburg, Fla.	Component Sales Corp., Box 9545	360-7460
Springfield, Mass.	160 Tapley St., Box 1611	RE 6-8373
Tampa, Fla.	4062 Henderson Blvd., Box 10597	253-0114
Washington, D.C.	1625 K St., N.W.	NA 8-8843
Winston-Salem, N.C.	Box 5463, Ardmore Station	724-5321

Westinghouse

High Contrast Display Storage Tubes

by
D.C. Brooke
&
F.N. Ingham

Presented
October 29, 1964
1964 Electron Devices Meeting
Sheraton - Park Hotel
Washington, DC

Introduction

The recent trend toward more widespread use of direct view storage tubes in such applications as radar indicators has raised the need for improvement in display storage tube technology.

One of the less desirable characteristics of display storage tubes in many applications is the change of background brightness with a change in operational modes. The high-contrast storage tube was developed specifically to eliminate this background brightness. With the elimination of background brightness, the high-contrast storage tube is capable of displaying information at very low light levels thus effecting more grey shades than conventional tubes under similar operating conditions. This increase in realizable grey shades and in contrast ratio was obtained while retaining all the storage and integration features of conventional display storage tubes

The high contrast feature is realized through the use of an additional grid, a suppressor grid, in the viewing section of the tube and applying to this grid a low voltage negative pulse in phase with the erase pulse. This is described in U.S. Patent 3,088,048, by J.W. Ogland et al.

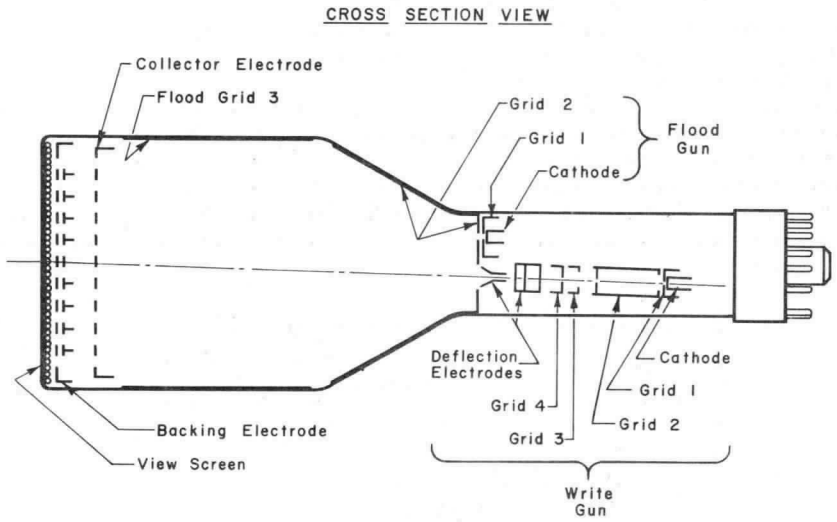

Figure 1

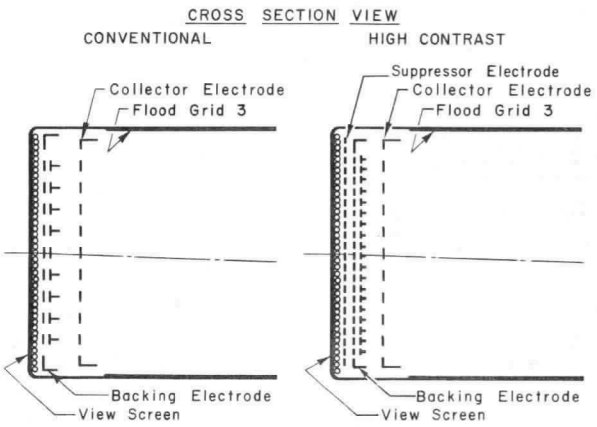

Figure 2

Figure 1 shows the cross section view of a typical conventional single writing gun display storage tube. The right hand portion of the tube contains the writing gun and flood gun. The left hand portion shows from left to right, the viewing screen, the storage grid, and the collector grid. These elements, including the flood gun comprise the viewing section of the tube. Figure 2 compares the viewing section of the conventional tube on the left, to the viewing section of the high contrast tube on the right. The only difference between the two is the presence of the suppressor grid between the viewing screen and the storage grid of the high contrast tube. Typically this suppressor grid is operated at a d.c. level of 25 to 75 volts positive; the high contrast pulse amplitude must be sufficient to drive the suppressor grid slightly negative with respect to the flood gun cathode potential. To achieve zero background brightness, the suppressor pulse width must be no less than width of the erase pulse which is applied to the storage grid. The purpose of this negative pulse is to prevent flood gun electrons from reaching the viewing screen during erase pulse on-time. When viewing conventional storage tubes, the observer's eye integrates the brief flashes of light caused by these flood electrons to an average level commonly referred to as background brightness.

May 1969
New Information
S6–8D–9E, TC–2238

Westinghouse

Characteristics

The operating characteristics of the high contrast tube, persistence, erase time and writing speed are similar to those of conventional display storage tubes.

Persistence

When dynamic control of persistence is desired a positive pulse train is applied to the storage grid so that flood electrons land on the dielectric surface and uniformly discharge it toward cut-off. Writing gun electrons simultaneously land on the dielectric in proportion to the modulation on the control grid. The resultant display persistence is a direct function of erase pulse duty cycle and amplitude. The suppressor pulse train applied to high contrast tubes does not effect the persistence. Figure 3 shows a plot of erase pulse duty cycle versus persistence for a typical display storage tube. The persistence as shown on the graph is very nearly that of erase time divided by erase pulse duty cycle. Here the erase time is defined as the minimum pulse width of a single pulse to erase the display from saturation brightness to 10% of saturation brightness. The difference between calculated and measured values at long persistences and low duty cycles is thought to be due to ion bombardment of the storage surface.

The amplitude of the single erase pulse or the amplitude of an erase train required to produce a given persistence is quite broad as is illustrated in Figure 4. Here erase pulse amplitudes and duty cycles were varied - the persistence remains constant for a wide range of amplitudes beyond the minimum which produces storage grid cut-off. The horizontal portions of the curves - that is, the constant persistence portions are the ranges over which the expression persistence equals erase time over erase pulse duty cycle, are valid. For example, the curve in Figure 3 was based on a 7 volt erase pulse amplitude. A vertical line drawn up through 7 volts on this curve intersects the 1, 2 and 4 percent duty cycle curves at the knee. It intersects the .25 and .5 percent curves however, above the knee. These lower duty cycles correspond to the region in Figure 3 of the greatest difference between measured and calculated values of persistence. Thus the persistence of any display storage tube is determined by its erase time and the characteristics of the erase pulse. The persistence characteristics illustrated here are typical of both high contrast and non-high contrast storage tubes.

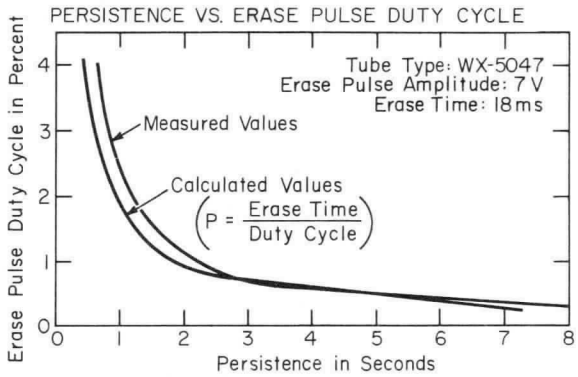

Figure 3

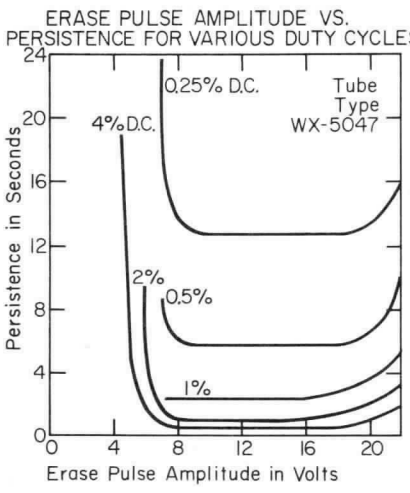

Figure 4

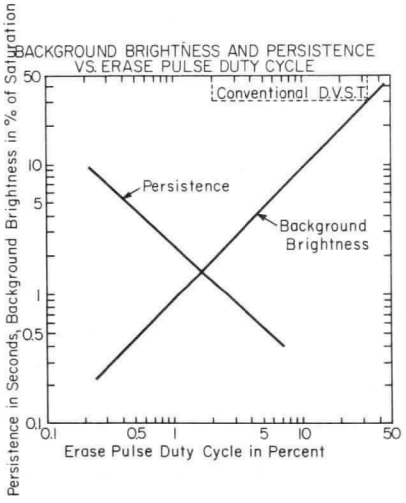

Figure 5

Background brightness, as previously mentioned, is caused by flood electrons striking the phosphor during the erase pulse on-time. This background brightness then, is a function of erase pulse duty cycle and is inversely proportional to persistence. Figure 5 shows the relationship of background brightness and persistence to erase pulse duty cycle. There is no background brightness curve for the high contrast tube when it is used in the high contrast mode.

Contrast Ratio

Since the contrast ratio may be expressed as saturation brightness divided by background brightness, the maximum contrast ratio that can be achieved in conventional storage tubes is dependent upon erase pulse duty cycle. The high contrast tube has a fixed contrast ratio for any erase pulse duty cycle. To illustrate the contrast ratios possible Figure 6 shows a high contrast tube without the suppressor pulse applied, to simulate a conventional storage tube. The bright dots on the bright background are simulated target returns. The erase pulse duty cycle is 1%, giving a persistence of about 1 second. Figure 7 illustrates the effect of the suppressor pulse. The set-up conditions remained identical. The background brightness in Figure 6 is 16 foot Lamberts, corresponding to 1% of saturation brightness; the background brightness in Figure 7 is equal to ambient, about 3 foot Lamberts. Figure 8 is a simulated radar display, a B sweep scanning from left to right. 20 KC random noise is applied to illustrate the detail contrast ratio of the high contrast tube.

High Contrast Display Storage Tubes

by
D.C. Brooke
&
F.N. Ingham

Useable Levels

With the elimination of background brightness, a wider dynamic brightness range is available and thus more useable brightness levels - or grey shades - may be realized than in conventional storage tubes. We can illustrate this by applying a staircase function to the write gun control grid. In Figure 9, eight useable levels are visible. Two additional steps were visible on the tube photographed, but were lost in the process of reproducing the photograph for Figure 9. The difference between each step of the staircase is one volt and the total dynamic range as viewed here is ten volts. The maximum number of useful levels specified for a standard display storage tube is 5, while 4 levels is more commonly specified. The increase in useable brightness levels obtained makes the high contrast tube more attractive for bright television and radar displays.

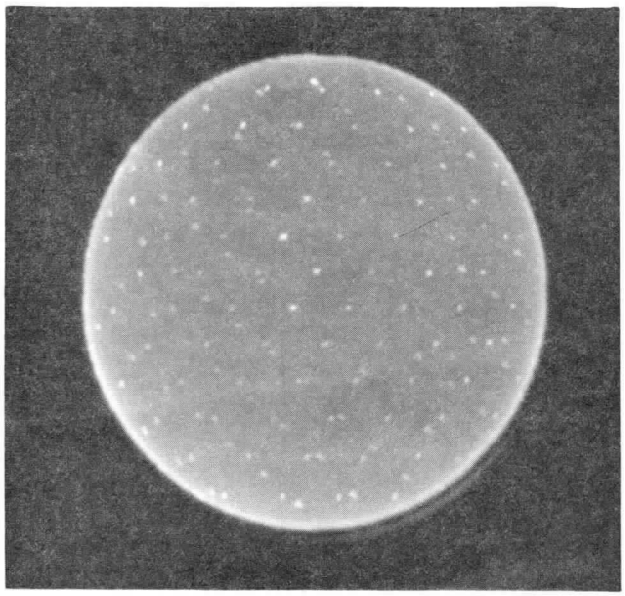

Figure 6

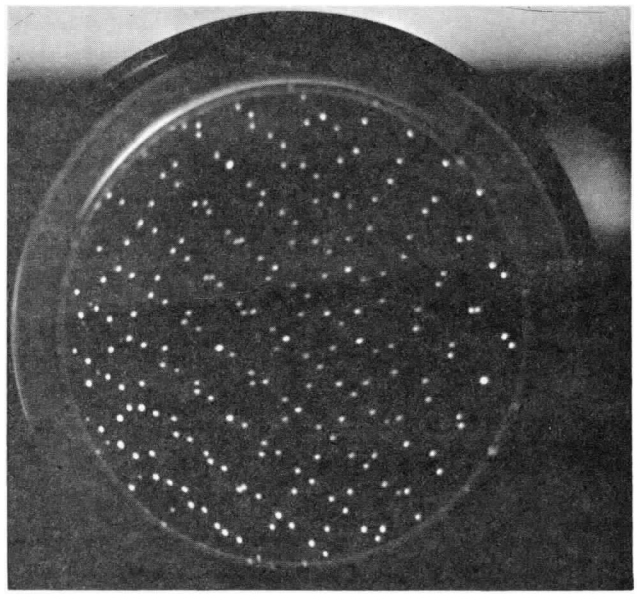

Figure 7

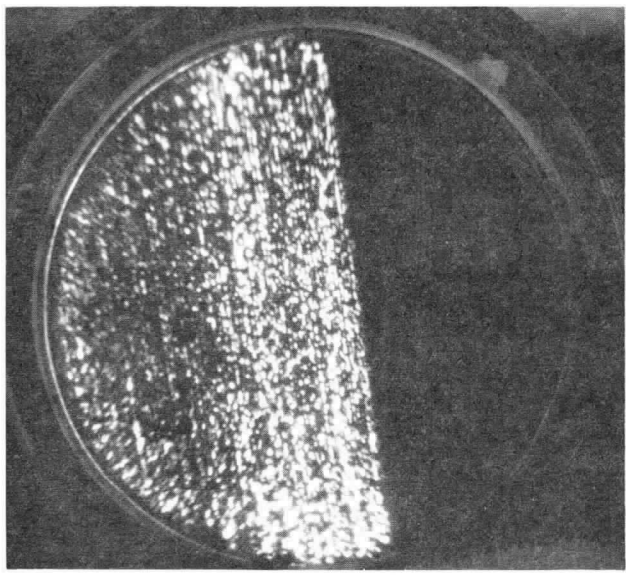

Figure 8

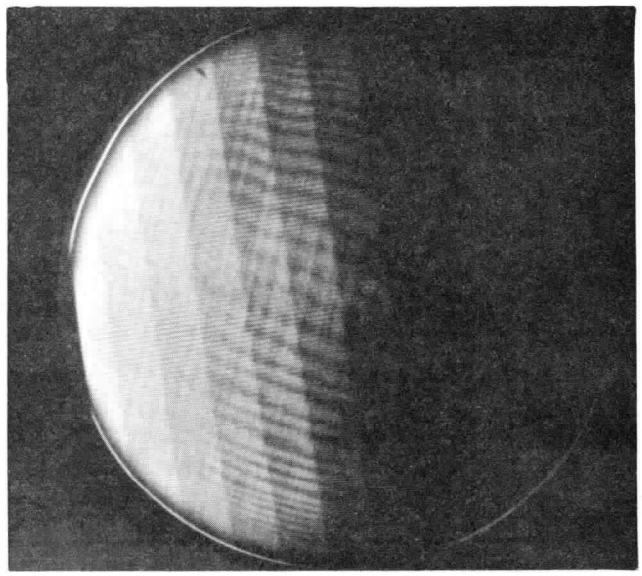

Figure 9

High Contrast Display Storage Tubes

by
D.C. Brooke
&
F.N. Ingham

Characteristics

Thus far only general characteristics of the of the high contrast tube have been discussed. Now two five inch high contrast tubes, WX-5444 and the WX-4951 will be examined in more detail. The typical erase time for these two tube types is 7 milliseconds minimum. Specified maximum erase time is 50 milliseconds. These two tubes are designed for different applications - the WX-5444 being a two writing gun, medium writing speed, low deflection factor tube, and the WX-4951 being a high writing speed, single writing gun tube. These tubes are typical of the high contrast family and have been most fully investigated to date. Other developmental types, in a wide range of sizes and characteristics have shown that the high contrast feature can be incorporated in any standard size tube.

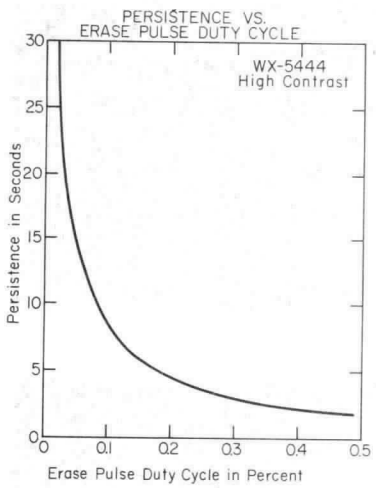

Figure 10

Figure 10 is a graph of persistence versus erase pulse duty cycle for the high contrast WX-5444. It will be noted that the persistence from saturation brightness to zero follows the formula; persistence equals erase time over erase pulse duty cycle, the same expression that was used to describe the persistence characteristic of a conventional tube in Figure 3. The erase time characteristic of this curve is 7.5 milliseconds, the measured erase time was 8 ±1 milliseconds. The relatively fast erase time of high contrast tubes enables the systems designer to use low erase duty cycles to obtain a given persistence. Since information is lost, that is, not written during the up time of the erase pulse, a low erase duty cycle is desirable.

One problem caused by the zero background brightness in the high contrast tube is the presence of a halo around brightly written areas. Although this halo is no brighter than in conventional tubes, it is more noticeable against a black background. A method of reducing this effect is currently under development by the authors in Elmira.

The additional grid in the viewing assembly has predictably decreased the resolution of high contrast tubes as compared to that obtainable in conventional tubes. For example, the resolution of the high contrast WX-4951 is 65 lines per inch at 50% of saturation brightness; under identical conditions, the non-high contrast WX-5047 is 90 lines per inch. These two tubes are mechanically identical except for the presence of the suppressor grid in the WX-4951. Recent development work has shown that nearly all this loss can be recovered by mechanically altering the suppressor grid structure.

The same range of writing speeds that can be obtained in the typical non-high contrast storage tube are realized in the high contrast configurations. The writing speeds range from below 5×10^3 inches per second to 1×10^6 inches per second, depending upon the application and tube type chosen.

The family of curves shown in Figure 11 illustrates the tradeoff between brightness and scanning speed typical of all display storage tubes. The one shown here is the high contrast WX-5444. The brightness shown in the graph

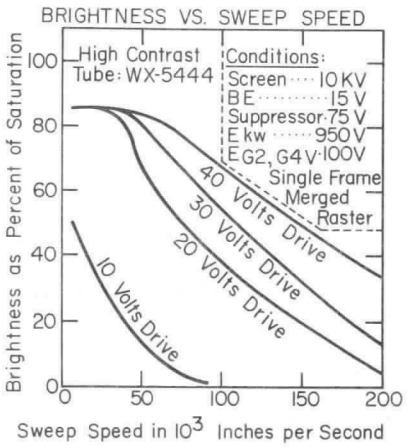

Figure 11

is for one scan only - that is, with no integration. This tube was designed to write to 90% of saturation brightness at 36000 inches per second with 30 volts drive. It will be seen here that the tube will write to about 50% of saturation at 125,000 inches per second.

Figure 12 is a summary of the electrical characteristics of the display storage tubes discussed in this paper. The erase time of high contrast tubes is shorter than conventional tubes. They have several more useable brightness levels, and a much higher contrast ratio. There is some loss in resolution, but all other characteristics are in the same range as in conventional display storage tubes.

COMPARISON OF TYPICAL ELECTRICAL CHARACTERISTICS

	High Contrast		Non-High Contrast	
Parameter	**WX-5444**	**WX-4951**	**WX-5047**	**WL-7268A**
Erase Time, Seconds	0.009	0.009	0.015	0.025
Usable Levels (Grey Scales)	7	7	4	5
Contrast Ratio	Very High	Very High	10:1	10:1
Brightness	2000	1000	1200	2000
Writing Speed	4×10^4	15×10^4	40×10^4	8×10^4
Maximum Resolution	60	65	90	65
Storage Time, Seconds	30	30	30	30
Screen Voltage, Volts	10,000	10,000	10,000	10,000
Display Diameter, Inches	4	4	4	4

Figure 12

Westinghouse Electric Corporation
Electronic Tube Division, Elmira, N. Y. 14902
Printed in U.S.A.

MAY - 6 1968

Westinghouse

Slow Scan Vidicons
Light Integration & Storage
Narrow-Band Video Transmission

0.62" Diameter Target Area
0.2 nA Dark Current

Application

The Westinghouse Slow-Scan Vidicons feature excellent light integration and storage characteristics, and extremely low dark current leakage. They are capable of storage, delayed readout or frame times of several minutes.

The Westinghouse Slow-Scan Vidicons operate by the mechanism of true charge storate, not as "sticky" or "laggy" vidicons. An erase cycle is not necessary to "prime" the target before imaging.

Transmission of video information over telephone lines or other narrow band-pass facilities is easily accomplished at low scan rates with the Westinghouse Slow-Scan Vidicons. It is also feasible to utilize short exposures to stop action, then store and readout at a variable rate. The Westinghouse Slow-Scan Vidicons can also be used for "time exposures" in which light from a low illumination scene can be gathered for a relatively long period of time before reading out the signal.

Westinghouse Slow-Scan Vidicons are available in a large variety of types to ensure optimum performance in any application. They can be supplied with magnetic, electrostatic or hybrid (ES focus, MAG deflection) guns. Also, the magnetic types have high-resolution versions. Westinghouse Slow-Scan Vidicons can be supplied either for commercial and industrial service or ruggedized, with low power heaters, for military and space applications. Westinghouse Slow-Scan Vidicons can be supplied with peak sensitivity in the visual or in the ultra-violet range. The schedule below indicates which tube type to order for each combination of characteristics.

Industrial Types

Gun Type / Spectral Range	Standard Magnetic	High Resolution Magnetic	Hybrid (ES Focus, Mag. Defl.)	All Electrostatic
Visual	WL-7290	WX-5111	WX-4950	WX-4384
Ultra-Violet	WX-4887	WX-5115	WX-5120	WX-4890

Military Types

Gun Type / Spectral Range	Standard Magnetic	High Resolution Magnetic	Hybrid (ES Focus, Mag. Defl.)	All Electrostatic
Visual	WX-5424	WX-5113	WX-5119	WX-4871
Ultra-Violet	WX-4885	WX-5117	WX-5121	WX-5118

Principles Of Operation

The desired image is focused optically on the target. The target consists of an extremely thin film which is, essentially, an insulator when not illuminated. Each area element of the target becomes conductive to a degree related to the relative brightness of its section of the optical image focused on it. Each target element therefore, behaves similarly to a charged capacitor with leaky insulation, with one plate at a fixed potential and the other plate "floating". This causes the target surface potential to rise toward the signal plate potential to a degree relative to the individual illumination of of each picture element.

The target is scanned by a low-velocity electron beam which deposits electrons on the target surface sufficient to return each surface element to cathode potential. This action gives rise to a current flow in the signal plate circuit which is a function of the rate of scan, the surface potential and the illumination of each individual element undergoing scanning.

The polarity of this signal swings negatively for illuminated areas of the target.

The electron beam is generated by a gun assembly comprising a heater, cathode, control grid (G1) and an accelerating grid (G2). Focus and deflection is performed either by electrostatic or magnetic fields or by combinations of both as detailed in Tables of Types.

A fine mesh screen is located immediately in front of the scanned surface of the target. It establishes a uniform electrostatic field between the electrode and the target. This field (magnetic vidicons require focus coils also) ensures that the scanning beam approaches the photolayer at an angle normal with respect to the target plane, a condition essential for returning the surface elements to cathode potential uniformly.

Environmental Ratings of Military Types

WX-4871	WX-5118
WX-4885	WX-5119
WX-5113	WX-5121
WX-5117	WX-5424

Shock

Apply 18 impact shocks of 50 G's consisting of 3 shocks in opposite directions along each of 3 mutually perpendicular axes of the tube with shock pulse duration of 11 milliseconds with no voltages applied.

Vibration

The tube is vibrated along each of 3 mutually perpendicular axes. The vibration cycle has a duration of 30 minutes per axis and the sinusoidal frequency is varied from 5 to 2000 hertz.

Double Amplitude Inches	Peak Acceleration G's	Sweep Frequencies Hertz
0.25	–	5 to 20
–	5	20 to 55
0.04	–	55 to 100
–	20	100 to 2000

Acoustical Noise

140 dB overall sound pressure level, 37.5 hertz to 9600 hertz, for a period of 5 minutes.

April 1968
Supersedes ET-1480 dated May 1, 1965
S6–3A–11C, S5–10C, WI–1300

Westinghouse

Sensitivity

Output of the Slow-Scan Vidicons is a function of target illumination, target voltage, area scanned and rate of scan. If all other parameters are held constant, output is proportional to the area which is scanned. Figures 1, 2, 3 & 4 illustrate the relationship between illumination, target voltage, and scan rate for a typical Slow-Scan tube. In all cases the scanned target area was 0.50" X 0.38", and the raster contained approximately 500 lines.

Tube output current is found to remain approximately constant at a given readout rate if the product of target illumination and exposure time is a constant, at least through the exposure time range of 10 milliseconds to 30 seconds. For example, a tube scanned at a 10 second frame rate with a continuous illumination of 0.01 foot candles would give the same output if exposed at 10 foot candles for 0.01 seconds during the retrace period and scanned in the dark.

In systems using the Slow-Scan Vidicons the noise generated in the video amplifier and/or target load resistor is greater than the noise generated in the tube. The signal output current at slow-scan rates is less than at the conventional 30 frame per second rate, but this does not necessarily result in a low signal-to-noise ratio. The bandwidth required is usually much less with slow-scan, and the resistance of the target load can be increased accordingly to get higher signal voltage at the grid of the first preamplifier tube. As target load impedance is raised into the megohm range, special care must be exercised to prevent the pickup of hum and deflection transients.

Resolution

The Slow-Scan Vidicons, operating at standard 525 line-30 frame per second scan rates, in a TV camera chain having 8 mc. bandwidth and employing a low noise preamplifier (417A cascode or equivalent) will display 600 line minimum resolution when viewing an EIA resolution chart. Tube voltages and focusing field in this instance are those indicated in the "TYPICAL OPERATION" sections. An improvement in resolution at this scan rate may be obtained by increasing the Grid 3 and Grid 4 voltage, and focus field. Specially designed deflection and focusing components are required in this mode of operation to keep beam landing errors to a minimum, and attention must be

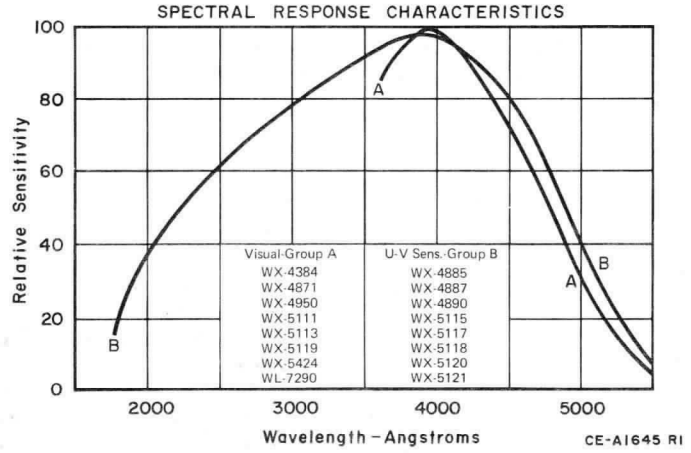

FIGURE 1

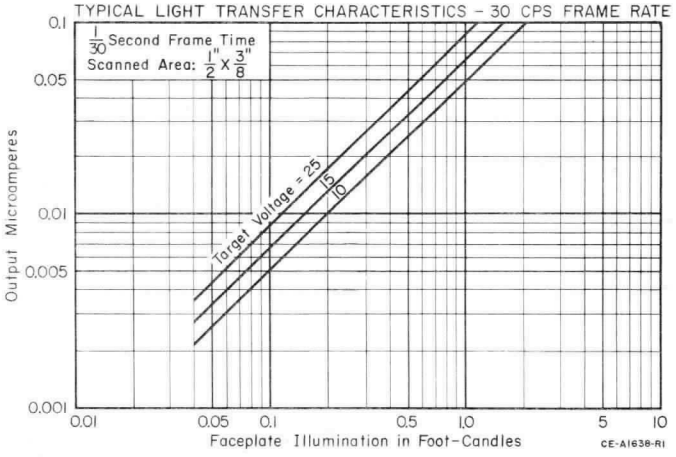

FIGURE 2

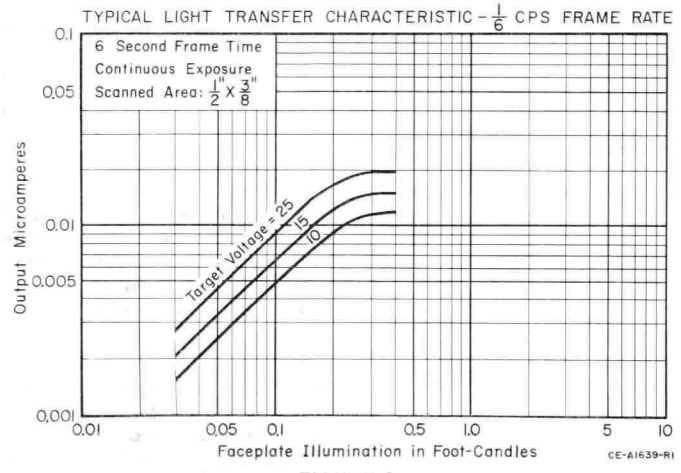

FIGURE 3

Slow Scan Vidicons

Light Integration & Storage

Narrow-Band Video Transmission

0.62" Diameter Target Area
0.2 nA Dark Current

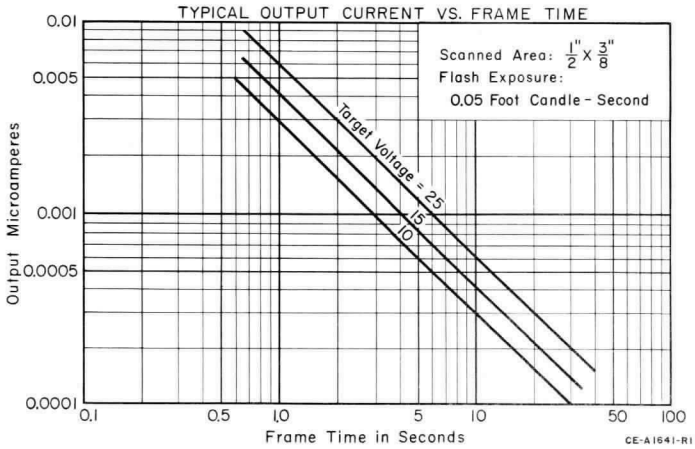

FIGURE 4

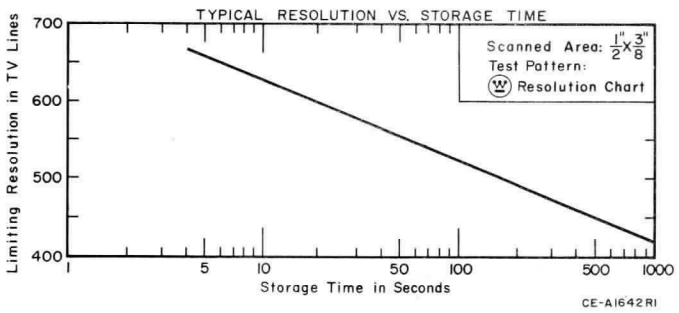

FIGURE 5

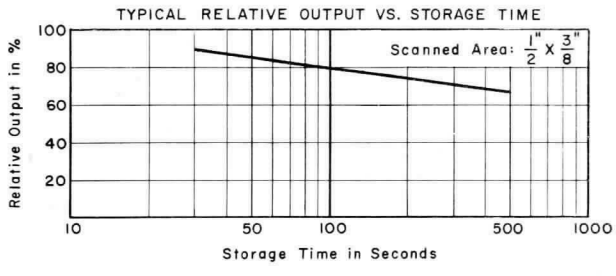

FIGURE 6

paid to means for keeping the tube faceplate temperature below the maximum specified. Increased deflection current will also be required.

At long storage or frame times, lateral charge leakage along the photoconductor is the factor which limits resolution. Figure 5 shows the decrease in resolution at long frame or storage times. Figure 6 shows the decrease in output produced by front-to-back leakage under the same conditions. Both curves are relatively independent of target voltage.

Dark Current

Due to the extremely high dark resistivity of the Slow-Scan Vidicons' target surface, dark current is usually considered negligible except at very low output levels. A value of 0.0002 microamperes has been measured at standard 30 frame per second scan rates.

Residual Signal

The Slow-Scan Vidicons operate satisfactorily at long frame times through the mechanism of true charge storage. They are not "sticky" or "laggy" vidicons. At the standard 525 line 30 frame per second rate, third field lag is approximately 30 to 40%. At long frame times the photoconductive lag is negligible and the degree to which information is erased upon readout depends on the beam current used. At beam currents giving optimum resolution, the amplitude of the readout during the second frame is typically about 20% of the first. The third frame readout may be of the order of 5% and the fourth frame readout negligible. These figures were obtained using non-interlaced scanning. Residual signal may be reduced by using higher values of beam current. The tube is thus well adapted for televising completely new information in each frame.

Target Voltage

Operation up to the absolute maximum of 25 volts is permissible, but spots may become visible at some potential above 15 volts. (These spots will disappear when the target voltage is again reduced.)

Westinghouse

Scanning

In conventional TV practice vidicons are scanned with a 4 x 3 aspect ratio rectangular raster, 0.5" x 0.38" so oriented that the horizontal scan is essentially parallel to the plane passing through the tube axis and short index pin. This convention ensures that the same area of the target will always be scanned. When the target of any vidicon is scanned for a period of time, the sensitivity of the scanned area experiences a slight but permanent change. If tube orientation with respect to the deflection yoke is subsequently changed, the outline of the previously scanned area will appear in the output.

If a 1 x 1 aspect ratio scan, PPI scan, or other non-standard scanning mode is desired, it may be necessary in some cases to ignore the above convention. The useful target area of the Slow-Scan Vidicons is contained within a circle 0.62 inch in diameter concentric with the tube axis. A 1 x 1 aspect ratio rectangle 0.44" x 0.44"or a PPI scan having a 0.62 inch maximum diameter could thus be used. The mesh is oriented to produce minimum moire when scan is parallel or perpendicular to the line through the axis and index pin. When linear scan is used it is desirable to employ this orientation. In any event, orientation once decided upon should be consistent so that the scanning will always be confined to the same area. For the same reasons underscanning should be avoided.

The Slow-Scan Vidicons have a very uniform surface. At the relatively low target voltages, at which they operate, optimum focus and output uniformity will be obtained with deflection components designed to cause the electron beam to land perpendicular to the target surface.

Data

Electrical

Cathode	Coated Unipotential
Heater:	
Voltage	6.3 Volts
Current:	
Industrial Types	0.60 Amperes
Military Types	0.15 Amperes
Direct Interelectrode Capacitances:	
Signal Electrode to all other Electrodes:	
Magnetic Types	4.5 pF
Hybrid Types	5.0 pF
Electrostatic Types	4.0 pF
Spectral Response	See Figure 1

Mechanical

Operating Position	Any
Overall Length:	
Industrial Magnetic Types	6.250" ± 0.125"
Military Magnetic Types	5.125" ± 0.125"
All Electrostatic & Hybrid Types	6.250" ± 0.125"
Greatest Diameter	1.125" ± 0.010"
Net Weight: (Approx.)	
Industrial Magnetic Types	2.1 Ounces
Military Magnetic Types	1.8 Ounces
All Electrostatic Types	2.6 Ounces
All Hybrid Types	2.8 Ounces
Base:	
All Magnetic & Hybrid Types	Small Button 8-Pin (JEDEC E8-11)
All Electrostatic Types	Small Button 13-Pin
Bulb	T-8

Accessories

Magnetic Types:
- Socket:
  - Cinch 54A-18088 or Equiv.
- Focus Coil:
  - Clev. Elect. VF-115-4AL or Equiv.
- Deflection Yoke:
  - Clev. Elect. VYL-160 or Equiv.
- Alignment Coil:
  - Clev. Elect. VA-132 or Equiv.

Hybrid Types:
- Socket:
  - Cinch 133-98-11-015 or Equiv.
- Deflection Yoke - Alignment Coil Assembly:
  - Clev. Elect. VYA-300 or Equiv.

Electrostatic Types:
- Socket:
  - Cinch 203-62-13-031 or Equiv.

Standard Magnetic

Maximum Ratings

Absolute Maximum Values

Faceplate:		
Illumination	1000 max.	Ft-C
Temperature	45 max.	°C
Target Voltage	25 max.	Volts
Grids 3 & 4 (Beam Focus)		
Voltage	1000 max.	Volts
Grid 2 Voltage	750 max.	Volts
Grid 1 Voltage:		
Negative Bias Value	300 max.	Volts
Positive Bias Value	0 max.	Volts
Heater-Cathode Voltage:		
Heater Negative with respect to Cathode	125 max.	Volts
Heater Positive with respect to Cathode	10 max.	Volts

Typical Operation

Faceplate:		
Illumination	See Sensitivity Section	
Temperature	25 to 35	°C
Target Voltage	10 to 25	Volts
Grids 3 & 4 (Beam Focus)		
Voltage	250 to 300	Volts
Grid 2 Voltage	300	Volts
Grid 1 Picture Cutoff		
Voltage	−45 to −100	Volts
Peak-to-Peak Blanking Voltage: (Min.)		
Applied to Cathode	10	Volts
Applied to Grid 1	40	Volts
Limiting Center Resolution	700 TV Lines	
Aperture Response	See Figure 7	

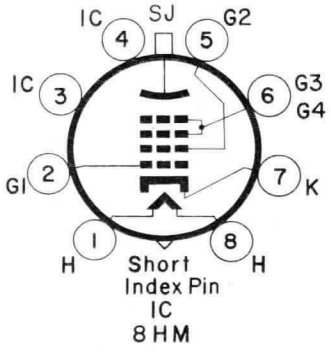

Slow Scan Vidicons
Light Integration & Storage
Narrow Band Video Transmission

0.62″ Diameter Target Area
0.2 nA Dark Current

Standard Magnetic

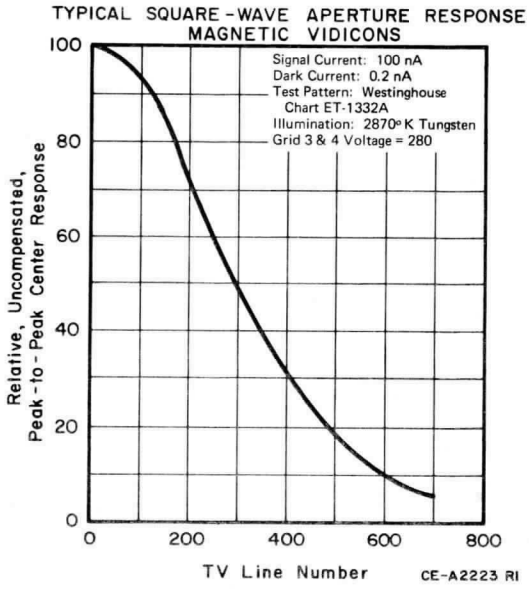

FIGURE 7

High Resolution Magnetic

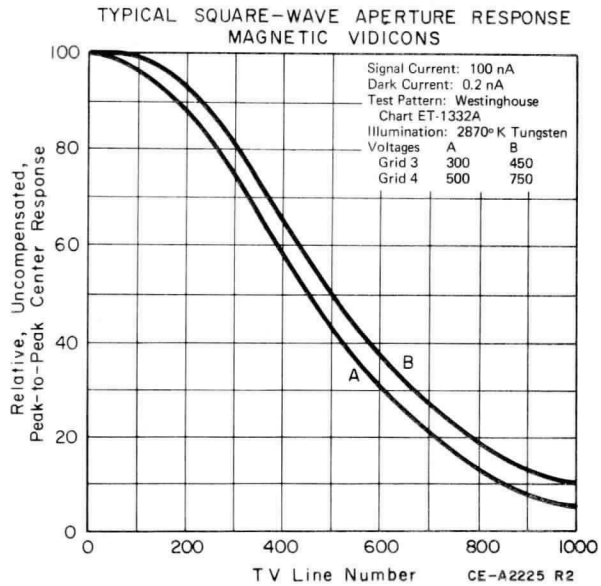

FIGURE 8

Maximum Ratings
Absolute Maximum Values

Faceplate:		
Illumination	1000 max.	Ft-C
Temperature	45 max.	°C
Target Voltage	25 max.	Volts
Grid 4 Voltage	1000 max.	Volts
Grid 3 (Beam Focus)		
Voltage	1000 max.	Volts
Grid 2 Voltage	750 max.	Volts
Grid 1 Voltage:		
Negative Bias Value	300 max.	Volts
Positive Bias Value	0 max.	Volts
Heater-Cathode Voltage:		
Heater Negative with respect to Cathode	125 max.	Volts
Heater Positive with respect to Cathode	10 max.	Volts

Typical Operation

Faceplate:		
Illumination	See Sensitivity Section	
Temperature	25 to 35	°C
Target Voltage	10 to 25	Volts
Grid 4 Voltage	500	750 Volts
Grid 3 (Beam Focus)		
Voltage	300	450 Volts
Grid 2 Voltage	300	300 Volts
Grid 1 Picture Cutoff		
Voltage	−45 to −100	−45 to −100 Volts
Peak-to-Peak Blanking Voltage: (Min.)		
Applied to Cathode	10	10 Volts
Applied to Grid 1	40	40 Volts
Focus Coil Field		
Strength	41 ± 4	52 ± 4 Gauss
Limiting Center Resolution	1000	1100 TV Lines
Aperture Response	See Figure 8	

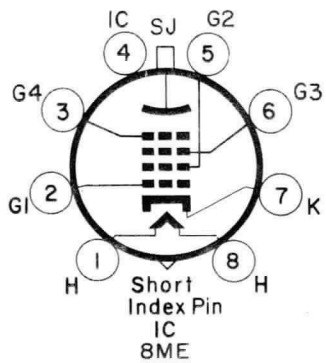

Westinghouse

Hybrid

Maximum Ratings

Absolute Maximum Values

Faceplate:			
Illumination	1000	max.	Ft-C
Temperature	45	max.	°C
Target Voltage	25	max.	Volts
Grids 6 & 3 Voltage	1000	max.	Volts
Grid 5 Voltage	1000	max.	Volts
Grid 4 Focus Voltage	300	max.	Volts
Grid 2 Voltage	750	max.	Volts
Grid 1 Voltage:			
Negative Bias Value	300	max.	Volts
Positive Bias Value	0	max.	Volts
Heater-Cathode Voltage:			
Heater Negative with respect to Cathode	125	max.	Volts
Heater Positive with respect to Cathode	10	max.	Volts

Typical Operation

Faceplate:				
Illumination	See Sensitivity Section			
Temperature	25 to 35			°C
Target Voltage	10 to 25			Volts
Grids 6 & 3				
Voltage	300	600	1000	Volts
Grid 5				
Voltage	180	360	600	Volts
Grid 4				
(Focus) Voltage	20 to 60	50 to 100	90 to 170	Volts
Grid 2				
Voltage	300	300	300	—
Grid 1 Picture Cutoff				
Voltage	−45 to −100	−45 to −100	−45 to −100	Volts
Peak-to-Peak Blanking Voltage: (Min.)				
Applied to Cathode	10	10	10	Volts
Applied to Grid 1	40	40	40	Volts
Limiting Center Resolution	650	750	850	TV Lines
Aperture Response	See Figure 9			

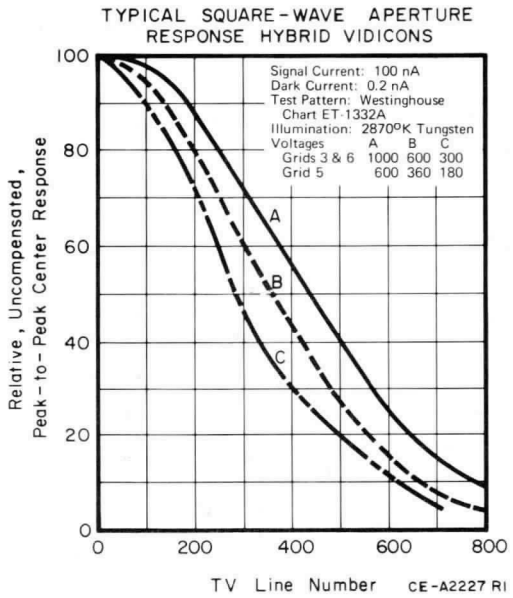

FIGURE 9

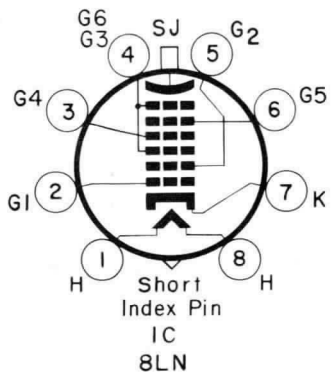

Slow Scan Vidicons
Light Integration & Storage
Narrow-Band Video Transmission

0.62″ Diameter Target Area
0.2 nA Dark Current

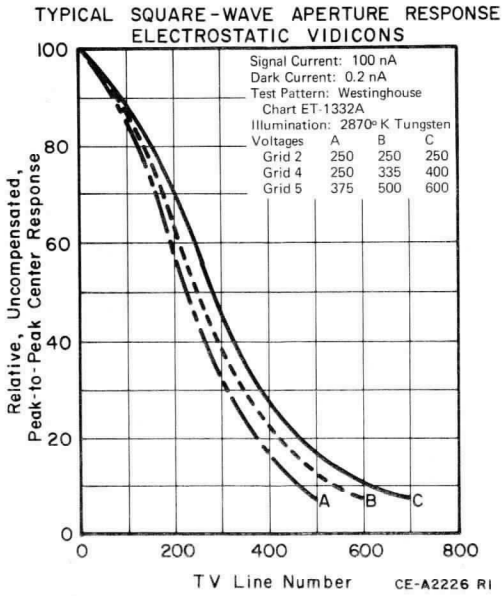

FIGURE 10

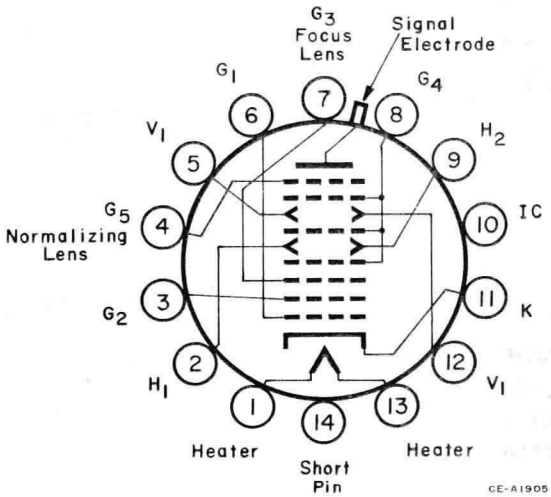

All Electrostatic

Maximum Ratings
Absolute Maximum Values

Faceplate:			
Illumination	1000	max.	Ft-C
Temperature	45	max.	°C
Target Voltage	25	max.	Volts
Grid 5 (Normalizing Lens)			
Voltage	750	max.	Volts
Grid 4 Voltage (Note)	750	max.	Volts
Deflection Plates			
D–C Voltage	750	max.	Volts
Grid 3 (Focus) Voltage	200	max.	Volts
Grid 2 Voltage	750	max.	Volts
Grid 1 Voltage:			
Negative Bias Value	300	max.	Volts
Positive Bias Value	0	max.	Volts
Heater-Cathode Voltage:			
Heater Negative with respect to Cathode	125	max.	Volts
Heater Positive with respect to Cathode	10	max.	Volts

Typical Operation

Faceplate:				
Illumination	See Sensitivity Section			
Temperature	25 to 35			°C
Target Voltage	10 to 25			Volts
Grid 5 (Nom. Lens)				
Voltage	375	500	600	Volts
Grid 4				
Voltage (Note)	250	335	400	Volts
Grid 3 (Focus)				
Voltage	50 to 80	60 to 90	70 to 100	Volts
Grid 2				
Voltage	250	250	250	Volts
Grid 1 Picture Cutoff				
Voltage	−45 to −100	−45 to −100	−45 to −100	Volts
Peak-to-Peak Blanking Voltage: (Min.)				
Applied to Cathode	10	10	10	Volts
Applied to Grid 1	40	40	40	Volts
Balanced Peak-to-Peak Deflection Voltage Plate:				
Horizontal	17	23	28	Volts
Vertical	14	19	23	Volts
Limiting Center Resolution	500	600	700	TV Lines
Aperture Response	See Figure 10			

Note: Grid 4 consists of the Entrance Aperture, Cross-Talk Aperture and Post Accelerator all connected internally.

Slow Scan Vidicons

Light Integration & Storage

Narrow-Band Video Transmission

0.62" Diameter Target Area
0.2 nA Dark Current

Magnetic and Hybrid

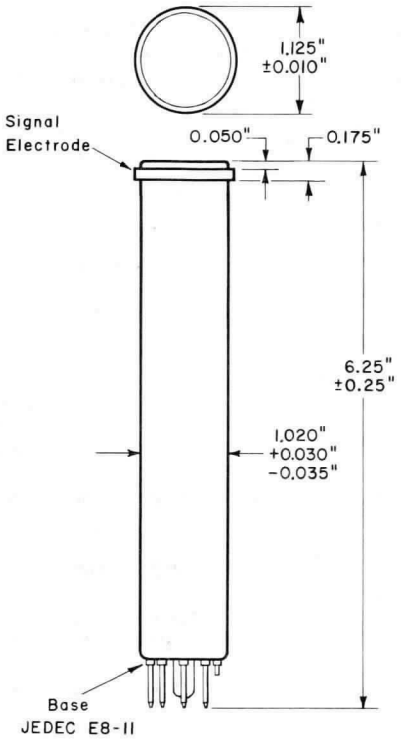

Tube Types

WX-4887
WX-4950
WX-5110
WX-5115
WX-5119
WX-5120
WX-5121
WL-7290

Military Magnetic

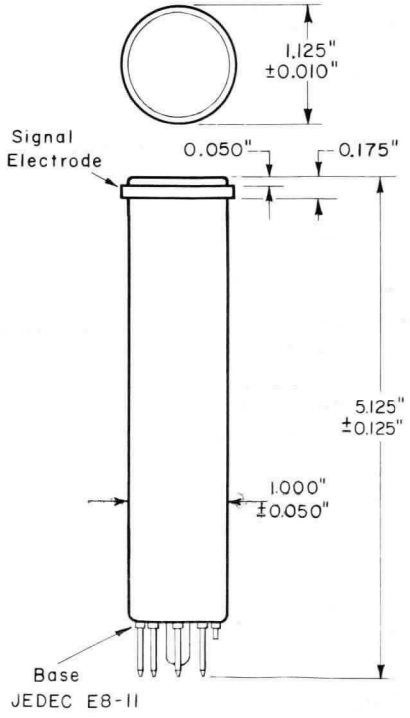

Tube Types

WX-4885
WX-5113
WX-5117
WX-5424

Electrostatic

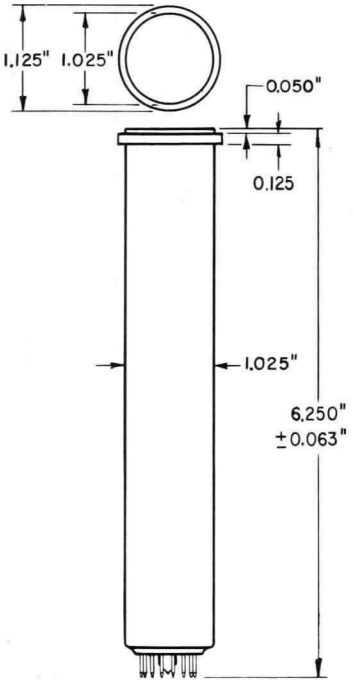

Tube Types

WX-4384
WX-4871
WX-4890
WX-5118

Westinghouse Electric Corporation
Electronic Tube Division, Elmira, N. Y. 14902
Printed in U. S. A.

May 1, 1965

SLOW SCAN VIDICONS

The Westinghouse Slow-Scan Vidicons feature excellent light integration and storage characteristics, and extremely low dark current leakage. They are capable of storage, delayed readout or frame times of several minutes.

The Westinghouse Slow-Scan Vidicons operate by the mechanism of true charge storage, not as "sticky" or "laggy" vidicons. An erase cycle is not necessary to "prime" the target before imaging.

Transmission of video information over telephone lines or other narrow band-pass facilities is easily accomplished at low scan rates with the Westinghouse Slow-Scan Vidicons. It is also feasible to utilize short exposures to stop action, then store and readout at a variable rate. The Westinghouse Slow-Scan Vidicons can also be used for "time exposures" in which light from a low illumination scene can be gathered for a relatively long period of time before reading out the signal.

Westinghouse Slow-Scan Vidicons are available in a large variety of types to ensure optimum performance in any application. They can be supplied with magnetic, electrostatic or hybrid (ES focus, MAG deflection) guns. Also, the magnetic types have high-resolution versions. Westinghouse Slow-Scan Vidicons can be supplied either for commercial and industrial service or ruggedized, with low power heaters, for military and space applications. Westinghouse Slow-Scan Vidicons can be supplied with peak sensitivity in the visual or in the ultra-violet range. The schedule below indicates which tube type to order for each combination of characteristics.

RANGE	GUN / ENVIRONMENT	STANDARD MAGNETIC	HIGH RESOLUTION STANDARD MAGNETIC	HIGH RESOLUTION SPECIAL MAGNETIC	HYBRID (ES FOCUS, MAGNETIC DEFLECTION)	ALL ELECTRO-STATIC
VISUAL	INDUSTRIAL	WL-7290	WX-5110	WX-5111	WX-4950	WX-4384
VISUAL	MILITARY	WX-5424	WX-5112	WX-5113	WX-5119	WX-4871
ULTRA VIOLET	INDUSTRIAL	WX-4887	WX-5114	WX-5115	WX-5120	WX-4890
ULTRA VIOLET	MILITARY	WX-4885	WX-5116	WX-5117	WX-5121	WX-5118

MECHANICAL - ALL TYPES

- Operating Position . . . . . Any
- Overall Length:
  - Industrial Magnetic Types . . . . . 6.250" ± 0.125"
  - Military Magnetic Types . . . . . 5.125" ± 0.125"
  - All Electrostatic & Hybrid Types . . . . . 6.250" ± 0.125"
- Greatest Diameter . . . . . 1.125" ± 0.010"
- Net Weight: (Approx.)
  - Industrial Magnetic Types . . . . . 2.1 Ounces
  - Military Magnetic Types . . . . . 1.8 Ounces
  - All Electrostatic Types. . . . . 2.6 Ounces
  - All Hybrid Types . . . . . 2.8 Ounces
- Base:
  - All Magnetic & Hybrid Types . . . . . Small Button 8-Pin (JEDEC E8-11)
  - All Electrostatic Types. . . . . Small Button 13-Pin
- Bulb T-8
- Socket:
  - All Magnetic. . . . . Cinch # 54A18088 or Equiv.
  - All Electrostatic Types. . . . . Cinch # 203-62-13-031 or Equiv.
  - Hybrid Types . . . . . Cinch # 133-98-11-015 or Equiv.

ELECTRICAL - ALL TYPES

- Cathode . . . . . Coated Unipotential
- Heater:
  - Voltage . . . . . 6.3 Volts
  - Current:
    - Industrial Types . . . . . 0.60 Amperes
    - Military Types. . . . . 0.15 Amperes
- Direct Interelectrode Capacitances:
  - Signal Electrode to all other Electrodes:
    - Magnetic Types. . . . . 4.5 pF
    - Hybrid Types. . . . . 5.0 pF
    - Electrostatic Types . . . . . 4.0 pF
- Spectral Response . . . . . See Figure 6

SUPERSEDES: WX-4384 – 12/15/61
WX-4887 – 1/8/62
WL-7290 – 9/15/60

STANDARD MAGNETIC
(Scanned Area 1/2" × 3/8")

MAXIMUM RATINGS

Absolute Maximum Values

Faceplate:		
Illumination	1000 max.	Ft-C
Temperature	45 max.	°C
Target Voltage	25 max.	Volts
Grids 3 & 4 (Beam Focus) Voltage	1000 max.	Volts
Grid 2 Voltage	750 max.	Volts
Grid 1 Voltage:		
Negative Bias Value	300 max.	Volts
Positive Bias Value	0 max.	Volts
Heater-Cathode Voltage:		
Heater Negative with Respect to Cathode	125 max.	Volts
Heater Positive with Respect to Cathode	10 max.	Volts

TYPICAL OPERATION

Faceplate:		
Illumination	See Figures 6, 7, 8 & 9	
Temperature	25 to 35	°C
Target Voltage	10 to 25	Volts
Grids 3 & 4 (Beam Focus) Voltage	250 to 300	Volts
Grid 2 Voltage	300	Volts
Grid 1 Picture Cutoff Voltage	−45 to −100	Volts
Peak-to-Peak Blanking Voltage: (Min.)		
Applied to Cathode	10	Volts
Applied to Grid 1	40	Volts
Limiting Center Resolution	700	TV Lines
Aperture Response	See Figure 1	

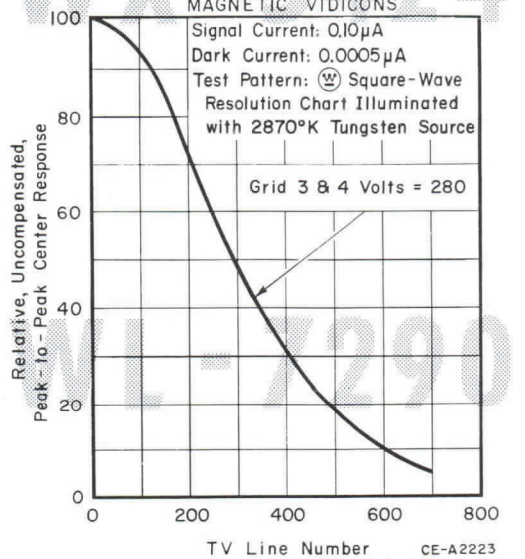

FIGURE 1

HIGH RESOLUTION STANDARD MAGNETIC
(Scanned Area 1/2" × 3/8")

MAXIMUM RATINGS

Absolute Maximum Values

Faceplate:		
Illumination	1000 max.	Ft-C
Temperature	45 max.	°C
Target Voltage	25 max.	Volts
Grids 4 & 2 Voltage	350 max.	Volts
Grid 3 (Beam Focus)	350 max.	Volts
Grid 1 Voltage:		
Negative Bias Value	300 max.	Volts
Positive Bias Value	0 max.	Volts
Heater-Cathode Voltage:		
Heater Negative with Respect to Cathode	125 max.	Volts
Heater Positive with Respect to Cathode	10 max.	Volts

TYPICAL OPERATION

Faceplate:		
Illumination	See Figures 6, 7, 8 & 9	
Temperature	25 to 35	°C
Target Voltage	10 to 25	Volts
Grids 4 & 2 Voltage	300	Volts
Grid 3 (Beam Focus) Voltage (Note)	250 to 295	Volts
Grid 1 Picture Cutoff Voltage	−45 to −100	Volts
Peak-to-Peak Blanking Voltage: (Min.)		
Applied to Cathode	10	Volts
Applied to Grid 1	40	Volts
Limiting Center Resolution	800	TV Lines
Aperture Response	See Figure 2	

NOTE: Grid 3 must operate within 50 volts of Grids 4 & 2 for optimum results.

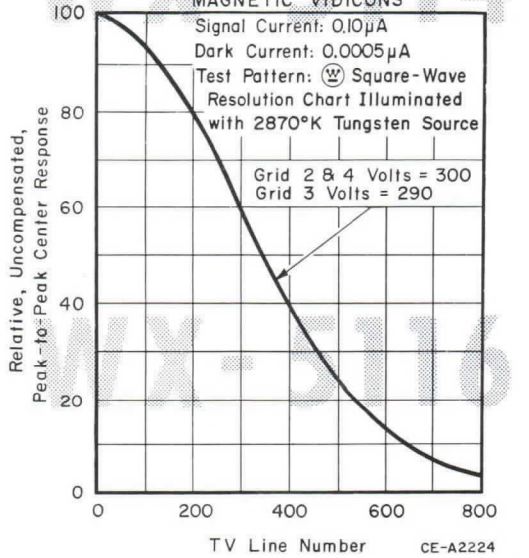

FIGURE 2

HIGH RESOLUTION SPECIAL MAGNETIC

(Scanned Area 1/2" × 3/8")

MAXIMUM RATINGS

Absolute Maximum Values

Faceplate:			
Illumination	1000	max.	Ft-C
Temperature	45	max.	°C
Target Voltage	25	max.	Volts
Grid 4 Voltage	1000	max.	Volts
Grid 3 (Beam Focus) Voltage	1000	max.	Volts
Grid 2 Voltage	750	max.	Volts
Grid 1 Voltage:			
Negative Bias Value	300	max.	Volts
Positive Bias Value	0	max.	Volts
Heater-Cathode Voltage:			
Heater Negative with Respect to Cathode	125	max.	Volts
Heater Positive with Respect to Cathode	10	max.	Volts

TYPICAL OPERATION

Faceplate:			
Illumination	See Figures 6, 7, 8 & 9		
Temperature	25 to 35		°C
Target Voltage	10 to 25		Volts
Grid 4 Voltage	500	750	Volts
Grid 3 (Beam Focus) Voltage	300	450	Volts
Grid 2 Voltage	300	300	Volts
Grid 1 Picture Cutoff Voltage	−45 to −100	−45 to −100	Volts
Peak-to-Peak Blanking Voltage: (Min.)			
Applied to Cathode	10	10	Volts
Applied to Grid 1	40	40	Volts
Focus Coil Field Strength	41 ± 4	52 ± 4	Gauss
Limiting Center Resolution	800	900	TV Lines
Aperture Response	See Figure 3		

TYPICAL SQUARE-WAVE APERTURE RESPONSE
MAGNETIC VIDICONS

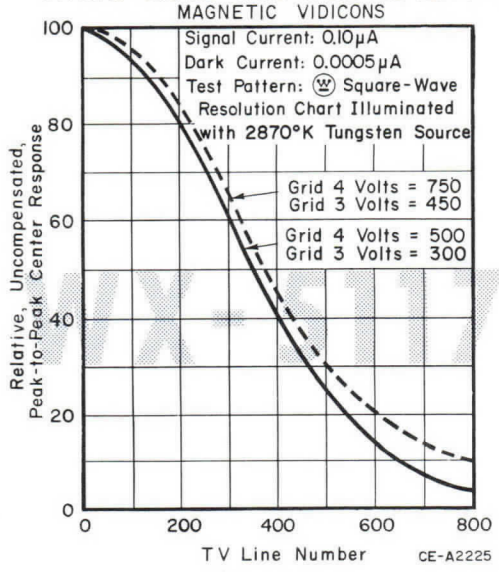

FIGURE 3

HYBRID ES-FOCUS, MAG-DEFLECTION

(Scanned Area 1/2" × 3/8")

MAXIMUM RATINGS

Absolute Maximum Values

Faceplate:			
Illumination	1000	max.	Ft-C
Temperature	45	max.	°C
Target Voltage	25	max.	Volts
Grids 6 & 3 Voltage	1000	max.	Volts
Grid 5 Voltage	1000	max.	Volts
Grid 4 Focus Voltage	300	max.	Volts
Grid 2 Voltage	750	max.	Volts
Grid 1 Voltage:			
Negative Bias Value	300	max.	Volts
Positive Bias Value	0	max.	Volts
Heater-Cathode Voltage:			
Heater Negative with Respect to Cathode	125	max.	Volts
Heater Positive with Respect to Cathode	10	max.	Volts

TYPICAL OPERATION

Faceplate:				
Illumination	See Figures 6, 7, 8 & 9			
Temperature	25 to 35			°C
Target Voltage	10 to 25			Volts
Grids 6 & 3 Voltage	300	500	750	Volts
Grid 5 Voltage	180	300	450	Volts
Grid 4 (Focus) Voltage	20 to 60	50 to 100	90 to 15	Volts
Grid 2 Voltage	300	300	300	–
Grid 1 Positive Cutoff Voltage	−45 to −100	−45 to −100	−45 to −100	Volts
Peak-to-Peak Blanking Voltage:				
Applied to Cathode	10	10	10	Volts
Applied to Grid 1	40	40	40	Volts
Limiting Center Resolution	600	700	750	TV Lines
Aperture Response	See Figure 4			

TYPICAL SQUARE-WAVE APERTURE RESPONSE
HYBRID VIDICONS

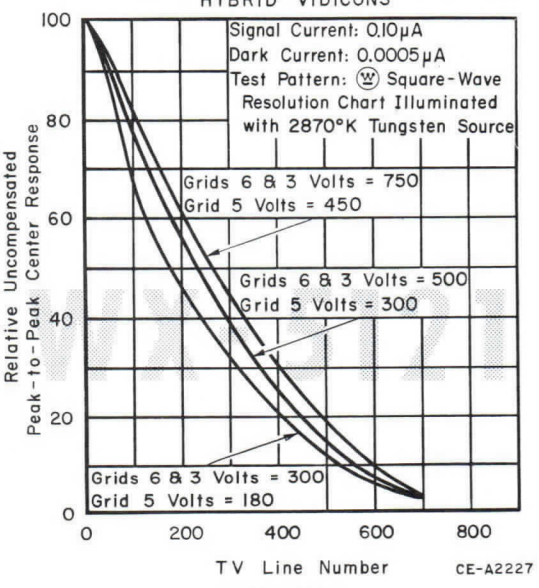

FIGURE 4

ALL ELECTROSTATIC

MAXIMUM RATINGS (Scanned Area 1/2" × 3/8")

Absolute Maximum Values

Faceplate:		
Illumination	1000 max.	Ft-C
Temperature	45 max.	°C
Target Voltage	25 max.	Volts
Grid 5 (Normalizing Lens) Voltage	750 max.	Volts
Grid 4 Voltage (Note)	750 max.	Volts
Deflection Plates D-C Voltage	750 max.	Volts
Grid 3 (Focus) Voltage	200 max.	Volts
Grid 2 Voltage	750 max.	Volts
Grid 1 Voltage:		
Negative Bias Value	300 max.	Volts
Positive Bias Value	0 max.	Volts
Heater-Cathode Voltage:		
Heater Negative with Respect to Cathode	125 max.	Volts
Heater Positive with Respect to Cathode	10 max.	Volts

TYPICAL OPERATION

Faceplate:				
Illumination	See Figures 6, 7, 8 & 9			
Temperature	25 to 35			°C
Target Voltage	10 to 25			Volts
Grid 5 (Norm. Lens) Voltage	375	500	600	Volts
Grid 4 Voltage (Note)	250	335	400	Volts
Grid 3 (Focus) Voltage	50 to 80	60 to 90	70 to 100	Volts
Grid 2 Voltage	250	250	250	Volts
Grid 1 Picture Cutoff Voltage	−45 to −100	−45 to −100	−45 to −100	Volts
Deflection Plates D-C Voltage	250	335	400	Volts
Peak-to-Peak Blanking Voltage: (Min.)				
Applied to Cathode	10	10	10	Volts
Applied to Grid 1	40	40	40	Volts
Balanced Peak-to-Peak Deflection Voltage per Plate				
Horizontal	17	23	28	Volts
Vertical	14	19	23	Volts
Limiting Center Resolution	500	600	700	TV Lines
Aperture Response	See Figure 5			

NOTE: Grid 4 consists of the Entrance Aperture, Cross-Talk Aperture and Post Accelerator all connected internally.

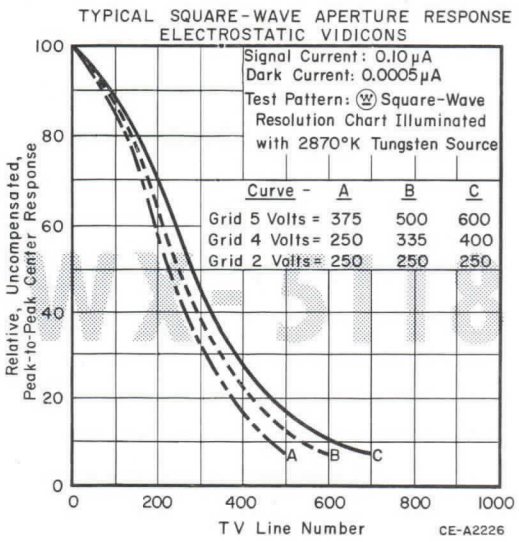

FIGURE 5

SENSITIVITY

Output of the Slow Scan Vidicons is a function of target illumination, target voltage, area scanned, and rate of scan. If all other parameters are held constant, output is proportional to the area which is scanned. Figures 6, 7, 8 & 9 illustrate the relationship between illumination, target voltage, and scan rate for a typical Slow Scan tube. In all cases the scanned target area was 1/2" × 3/8", and the raster contained approximately 500 lines.

Tube output current is found to remain approximately constant at a given readout rate if the product of target illumination and exposure time is a constant, at least through the exposure time range of 10 milliseconds to 30 seconds. For example, a tube scanned at a 10 second frame rate with a continuous illumination of 0.01 foot candles would give the same output if exposed at 10 foot candles for 0.01 seconds during the retrace period and scanned in the dark.

In systems using the Slow Scan vidicons the noise generated in the video amplifier and/or target load resistor is greater than the noise generated in the tube. The signal output current at slow scan rates is less than at the conventional 30 frame per second rate, but this does not necessarily result in a low signal-to-noise ratio. The bandwidth required is usually much less with slow-scan, and the resistance of the target load can be increased accordingly to get higher signal voltage at the grid of the first preamplifier tube. As target load impedance is raised into the megohm range, special care must be exercised to prevent the pickup of hum and deflection transients.

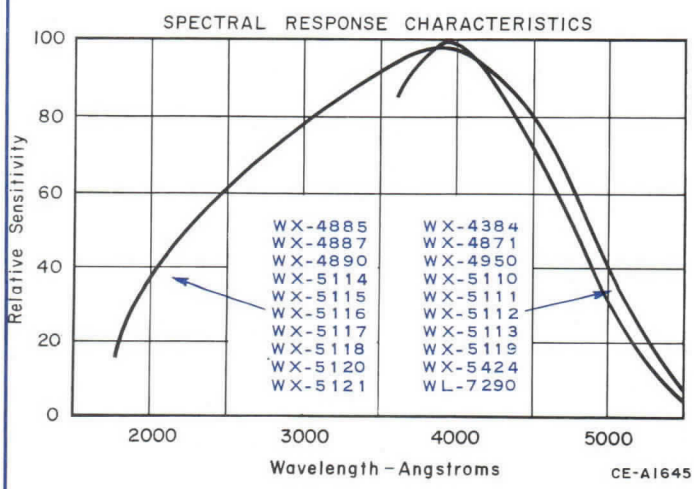

FIGURE 6

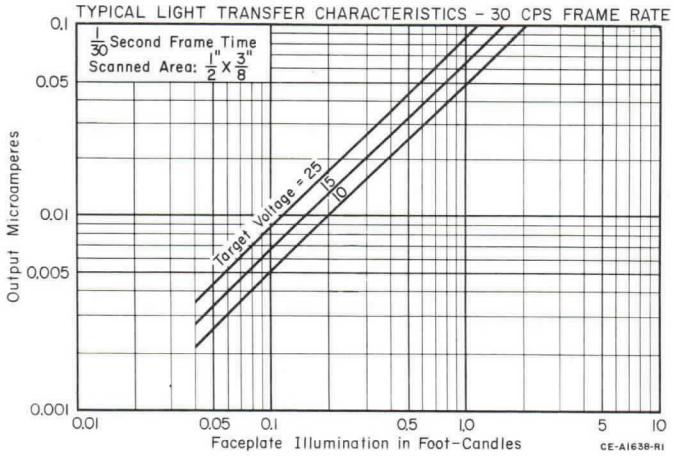

FIGURE 7

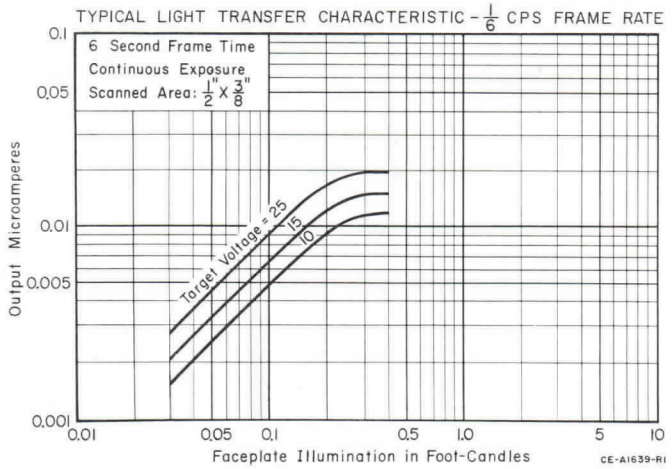

FIGURE 8

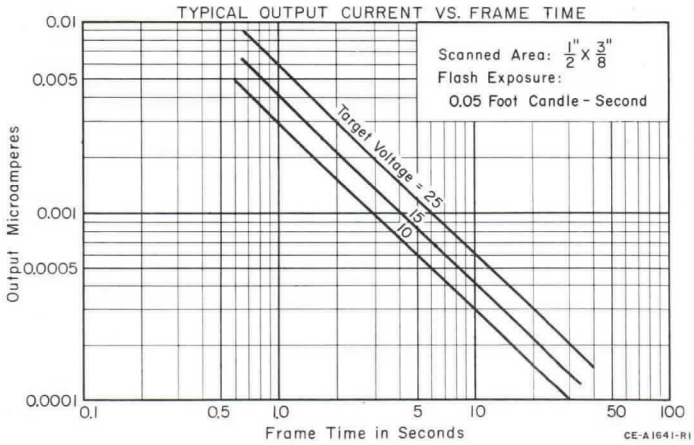

FIGURE 9

RESOLUTION

The Slow Scan Vidicons, operating at standard 525 line-30 frame per second scan rates, in a TV camera chain having 8 mc. bandwidth and employing a low noise preamplifier (417A cascode or equivalent) will display 600 line minimum resolution when viewing an EIA resolution chart. Tube voltages and focusing field in this instance are those indicated in the "TYPICAL OPERATION" sections. An improvement in resolution at this scan rate may be obtained by increasing the Grid 3 and Grid 4 voltage, and focus field. Specially designed deflection and focusing components are required in this mode of operation to keep beam landing errors to a minimum, and attention must be paid to means for keeping the tube faceplate temperature below the maximum specified. Increased deflection current will also be required.

At long storage or frame times, lateral charge leakage along the photoconductor is the factor which limits resolution. Figure 10 shows the decrease in resolution at long frame or storage times. Figure 11 shows the decrease in output produced by front-to-back leakage under the same conditions. Both curves are relatively independent of target voltage.

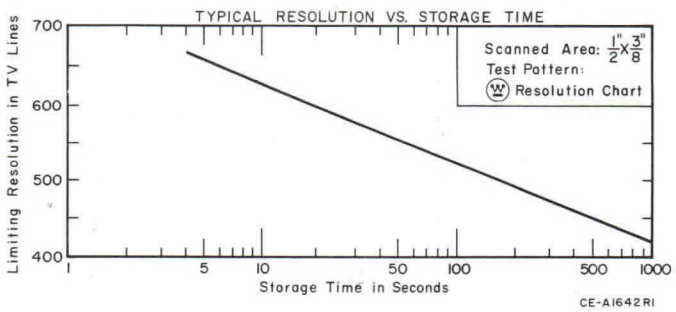

FIGURE 10

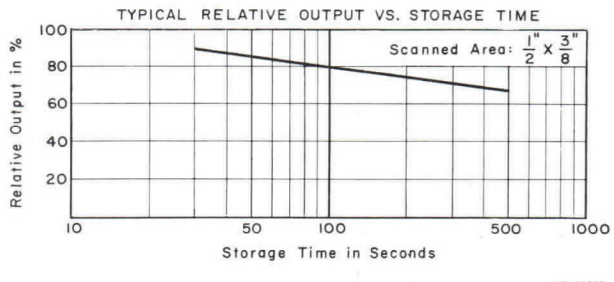

FIGURE 11

DARK CURRENT

Due to the extremely high dark resistivity of the Slow Scan Vidicons' target surface, dark current is usually considered negligible except at very low output levels. A value of 0.0002 microamperes has been measured at standard 30 frame per second scan rates.

RESIDUAL SIGNAL

The Slow Scan Vidicons operate satisfactorily at long frame times through the mechanism of true charge storage. They are not "sticky" or "laggy" vidicons. At the standard 525 line 30 frame per second rate, third field lag is approximately 30 to 40%. At long frame times the photoconductive lag is negligible and the degree to which information is erased upon readout depends on the beam current used. At beam currents giving optimum resolution, the amplitude of the readout during the second frame is typically about 20% of the first. The third frame readout may be of the order of 5% and the fourth frame readout negligible. These figures were obtained using non-interlaced scanning. Residual signal may be reduced by using higher values of beam current. The tube is thus well adapted for televising completely new information in each frame.

TARGET VOLTAGE

Operation up to the absolute maximum of 25 volts is permissible, but spots may become visible at some potential above 15 volts. (These spots will disappear when the target voltage is again reduced.)

WX-4887
WX-4950
WX-5110
WX-5111
WX-5114
WX-5115
WX-5119
WX-5120
WX-5121
WL-7290

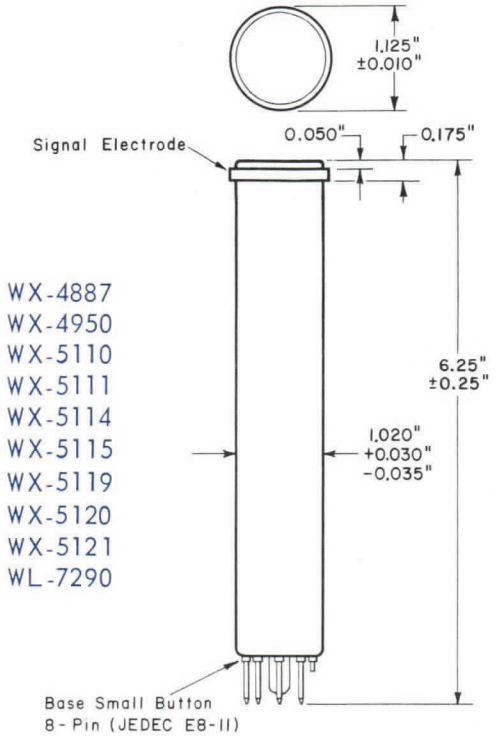

FIGURE 12

WX-4885 WX-5424
WX-4887 WL-7290

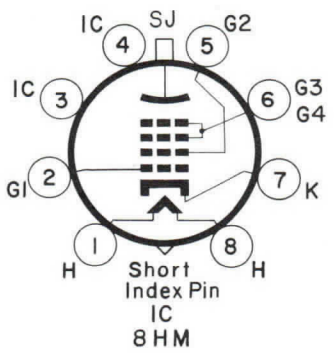

FIGURE 15

WX-5110 WX-5114
WX-5112 WX-5116

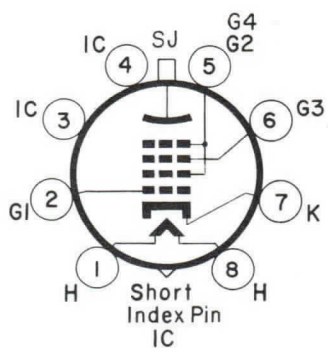

FIGURE 16

WX-5111 WX-5115
WX-5113 WX-5117

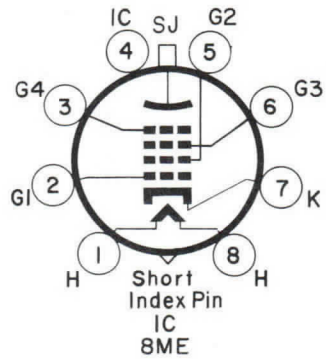

FIGURE 17

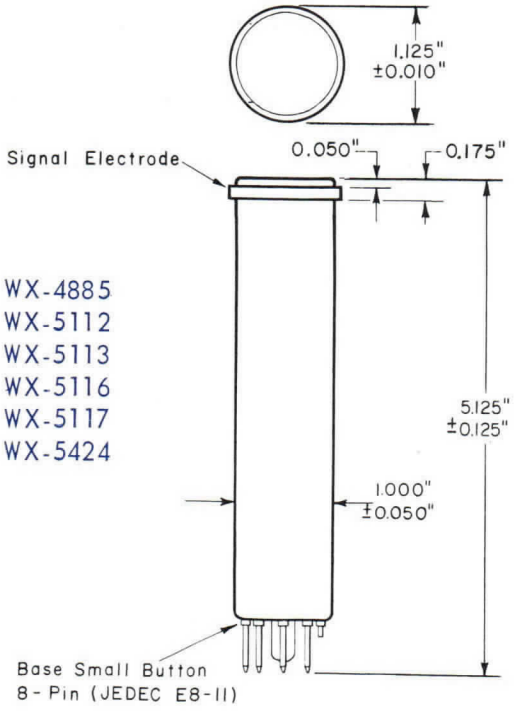

WX-4885
WX-5112
WX-5113
WX-5116
WX-5117
WX-5424

FIGURE 13

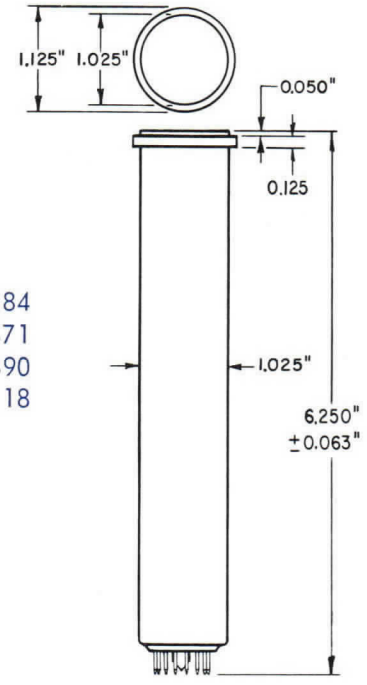

WX-4384
WX-4871
WX-4890
WX-5118

FIGURE 14

WX-4950 WX-5120
WX-5119 WX-5121

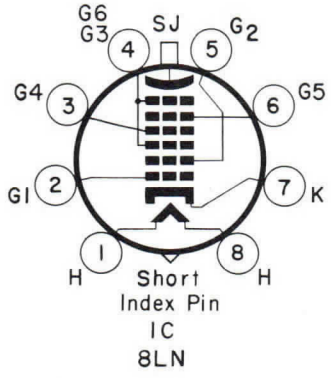

FIGURE 18

WX-4384 WX-4890
WX-4871 WX-5118

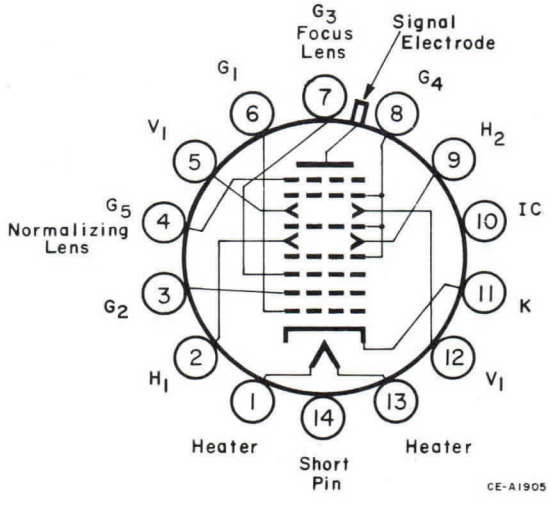

FIGURE 19

SCANNING

In conventional TV practice vidicons are scanned with a 4 × 3 aspect ratio rectangular raster, 1/2" × 3/8", so oriented that the horizontal scan is essentially parallel to the plane passing through the tube axis and short index pin. This convention ensures that the same area of the target will always be scanned. When the target of any vidicon is scanned for a period of time, the sensitivity of the scanned area experiences a slight but permanent change. If tube orientation with respect to the deflection yoke is subsequently changed, the outline of the previously scanned area will appear in the output.

If a 1 × 1 aspect ratio scan, PPI scan, or other non-standard scanning mode is desired, it may be necessary in some cases to ignore the above convention. The useful target area of the Slow Scan Vidicons is contained within a circle 0.62 inch in diameter concentric with the tube axis. A 1 × 1 aspect ratio rectangle 7/16" × 7/16" or a PPI scan having a 0.62 inch maximum diameter could thus be used. The mesh is oriented to produce minimum moire when scan is parallel or perpendicular to the line through the axis and index pin. When linear scan is used it is desirable to employ this orientation. In any event, orientation once decided upon should be consistent so that the scanning will always be confined to the same area. For the same reasons underscanning should be avoided.

The Slow Scan Vidicons have a very uniform surface. At the relatively low target voltages, at which they operate, optimum focus and output uniformity will be obtained with deflection components designed to cause the electron beam to land perpendicular to the target surface.

PRINCIPLES OF OPERATION

The desired image is focused optically on the target. The target consists of an extremely thin film which is, essentially, an insulator when not illuminated. Each area element of the target becomes conductive to a degree related to the relative brightness of its section of the optical image focused on it. Each target element therefore, behaves similarly to a charged capacitor with leaky insulation, with one plate at a fixed potential and the other plate "floating". This causes the target surface potential to rise toward the signal plate potential to a degree relative to the individual illumination of each picture element.

The target is scanned by a low-velocity electron beam which deposits electrons on the target surface sufficient to return each surface element to cathode potential. This action gives rise to a current flow in the signal plate circuit which is a function of the rate of scan, the surface potential and the illumination of each individual element undergoing scanning.

The polarity of this signal swings negatively for illuminated areas of the target.

The electron beam is generated by a gun assembly comprising a heater, cathode, control grid (G1) and an accelerating grid (G2). Focus and deflection is performed either by electrostatic or magnetic fields or by combinations of both as detailed in Table of Types.

A fine mesh screen is located immediately in front of the scanned surface of the target. It establishes a uniform electrostatic field between the electrode and the target. This field (magnetic vidicons require focus coils also) ensures that the scanning beam approaches the photolayer at an angle normal with respect to the target plane, a condition essential for returning the surface elements to cathode potential uniformly.

FUNCTIONAL VIEW OF VIDICON

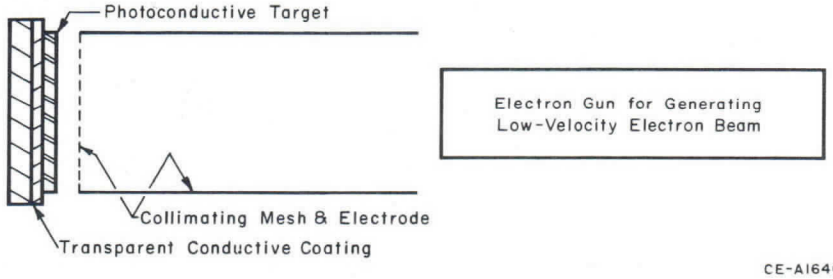

CE-A1640

FIGURE 20

The information contained herein is supplied without assuming responsibility for infringement of patents or other rights of third parties which may result from its use. No license is granted by implication or otherwise under any patent or patent rights of Westinghouse Electric Corporation.

Westinghouse

Two Stage Image Intensifier

Model DVI-200

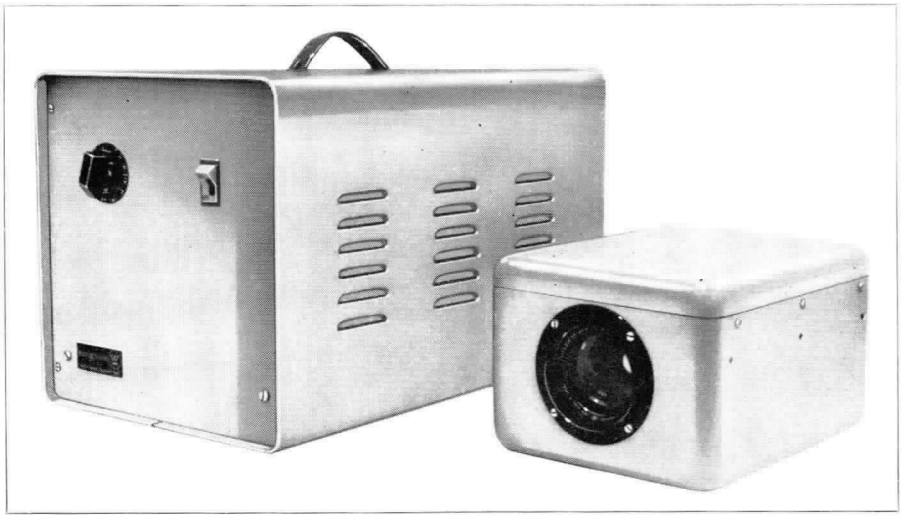

General Description

The Westinghouse Two-Stage Image Intensifier is a complete system designed to intensify low light level images with low distortion, high resolution, high signal to noise ratio at extremely high gains.

The system consists of two modules: the image converter module and the power supply module connected by two high voltage cables and an interlock cable.

The salient characteristics of the Two-Stage Image Intensifier make it ideally suited for use as a directly viewed light amplifier (to view low light level scenes directly) or as an image amplifier optically coupled to a video camera tube such as an image orthicon, SEC vidicon or image dissector. The converter modules may be cascaded for higher gain or used as an intermediate amplifier following an image converter operating outside the visible spectrum.

Power Supply Module

The high voltage power supply is controlled by a variable transformer and employs a Corotron① for excellent regulation and ripple reduction to enhance resolution.

The high voltage is grounded at mid potential to reduce shock hazard, corona and insulation requirements. Front panel controls consist of a voltage control dial and an ON-OFF switch with indicator.

The power supply weighs approximately 35 pounds and is 11″ tall, 11″ wide, 18″ deep. Power required is one ampere at 115 volts ac., 60 Hertz.

① Trademark of Victoreen.

Image Converter Module

The two-stage magnetically focused image converter exhibits low distortion and high resolution to the edge of the field. The S-20 photo cathode covers the visible spectrum with maximum sensitivity at 4200 Angstroms in the blue. Type P-11 phosphor is employed resulting in optimum energy transfer to a photographic film or succeeding image tubes. A cylindrical permanent magnet provides the focus field for the image conductor. The permanent magnet eliminates the heat, power supply and adjustment required by a focus coil.

Image converter magnification is unity with a typical radiant power conversion gain of 3000. The useful photocathode and phosphor diameters are 1.5 inches with typical center resolution of 36 line pairs per millimeter.

Particular care is exercised in the design and construction of the image converter module to exclude stray light and prevent corona. This allows operation of the converter at signal levels limited only by the inherent noise of the device. Equivalent background input is a maximum of 1 x 10^{-13} watts/cm^2.

The decay time of the phosphor provides some signal integration. The typical P-11 persistence decay time is 60 microseconds which is comparable to one horizontal line period in a 525 line camera system. The decay time is long enough for apparent line by line integration but short enough to avoid image smear. This characteristic is of particular advantage when the two stage image intensifier is employed with an image dissector.

F/0.95 lenses are available to couple the energy into and out of the image tube.

August, 1966
New Information
E. C/2212-2214/DB

Two Stage Image Intensifier

Model DVI-200

Specifications

Photocathode: Spectral response – S-20; diameter – 1.5 inches.

Viewing Screen: Phosphor P-11; diameter – 1.5 inches.

Focusing Method: Magnetic.

Magnification: Unity.

Typical Radiant Power Conversion Gain: 3000.

Typical Resolution: 36 lp/mm.

Maximum Background Input: 1 x 10^{-13} watts/cm^2.

Input: 120 volts ac 60 Hertz.

Power Consumption: 120 watts.

Applications

Typical application areas of an image intensifier and other available camera systems are listed below:

- Narrow bandwidth transmission of video information.
- Hi resolution video display.
- Scan conversion.
- Observation of transient events.
- Amplification of weak images.
- Optical recording and storage of video information.
- Observation under U.V., X-Ray and IR radiation.
- Optical monitoring and control of industrial processing in critical environments.

Westinghouse Electric Corporation
Electro-Optical Equipment Department: P.O. Box 10534, Pittsburgh, Pa. 15235
Printed in USA

Westinghouse

Secon Television Camera System

Model STV-300



General Description

The Westinghouse Secon camera is a specialized television camera especially suited for recording both transient events and stationary images under low light level conditions. It is ideally adaptable to industrial and scientific applications in which vidicon cameras are not sensitive enough or have too slow a response and where image orthicons cannot be satisfactorily used because of their limited dynamic range and low signal to noise ratio at low light levels. The camera uses a WX-5419 SEC Vidicon tube.

The camera is protected against overload and no dark halo is produced by the presence of bright sources within the field of view.

Input to the storage target may be gated to stop motion by switching the image section voltage.

The camera system consists of a camera head, camera control unit and display monitor.

Design Features

Bandwidth: 525 line system – 10MC ± 1 DB; 875-945 line system – 20MC ± 1 DB.

Resolution: 600 lines limiting resolution with 100% contrast scene at 10^{-2} foot candles photo cathode illumination. 200 lines threshold resolution with 100% contrast scene at 5×10^{-5} foot candles photo cathode illumination.

Electronic Voltage Regulation (over 110-130 volt range input): 0.1% high voltage supply, 0.1% low voltage supply.

Sweep Linearity: ±2%.

Focus Coil Regulation: .05%.

EIA Sync Generator (Optional): Conforms to EIA Standard RS-170. Two isolated outputs 1.4 volt P-P composite video.

Nuvistor Preamp: Low noise for low light level operations.

Overscan Capability: Capable of complete overscan of target with 75 gauss field.

Sweep Protection: Electronic – No relays.

Hybrid Circuitry: Completely solid state except for preamp low noise nuvistors.

Power Input: 120 volt ac, 60 cycle.

Total Power Consumption: 250 watts.

Optional Features

Complete descriptions of the following optional items are found on page 2:

Manual Integration and Single Frame Readout

Automatic Integration and Single Frame Readout

Interlaced or Sequential Scan

Digital Line Group Selector

High Resolution (875-945) or Other Line System

525-875 Selectable Line Rate

Video Polarity Reversal

Sweep Polarity Reversal

Aperture Correction

Gamma Correction

Automatic Target Control

August, 1966
New Information
E, C/2212-2214/DB

Secon Television Camera System

Model STV-300

SEC Tube Operation

The storage target in this tube developed by Westinghouse operates on the principle of secondary emission conduction. It is characterized by fast response, large storage capacity, high resistivity, and high gain. The scanning signal is taken directly from the target as with a vidicon. The signal-to-noise ratio is high and independent of the beam current. Dark current is negligible under all normal operating conditions. Any arbitrary delay may exist between exposure and readout without loss in signal. Slow scan may be used. The target performance is not a critical function of temperature and it may be operated within the limits required to maintain photo-cathode efficiency and structural integrity of the tube. The residual signal following the first scan is less than 15% of the initial value under normal operating conditions at standard television line and frame rates.

Camera

The camera contains a deflection, focus, and alignment coil assembly, video preamp with frequency compensation, blanking and electronic sweep protection. The camera head does not contain the sweep circuitry in order to minimize heating and thus help provide stable operation of the system. The video preamp module is nuvistorized to provide the best possible noise figure for low light level operation.

A 50 mm f 1.9 lens, bayonet type mount is normally provided. Other type mounts can be provided. Mechanical focus is provided by movement of the deflection assembly on a ball bearing track. The mechanical focus control is on the rear of the camera head. The head may be rotated during operation to any position desired.

Camera Control Unit (CCU)

The camera control unit normally is connected to the camera head by a special cable. A 40 foot cable is normally supplied.

The CCU contains high voltage and low voltage power supplies, vertical deflection, horizontal deflection, video processor, and optional EIA sync generator. Image tube control panel is also in the CCU and may be located remote from the CCU. In addition to the SEC Vidicon, this camera control unit has the capability of operating any number of different image tubes by simply choosing the appropriate camera head and making minor circuit changes and additions. These image tubes include the various image orthicons, including the 2″ and 4½″ image orthicons, and image dissector. Therefore, a combination system may be supplied consisting of one camera conrol unit and several different camera heads for various imaging tubes such as SEC vidicons, image orthicons and image dissectors.

Power Supplies

The main power supply is of solid state design and is located in the rear of the control unit. It contains 8 plug-in boards consisting of three high voltage regulators, two low voltage regulators, two voltage rectifier boards, and one focus current regulator.

The high voltage image section power supply is located underneath the main chassis.

Operating Information

The CCU may be placed in standby condition for warm-up or prolonged waiting periods if desired. The standby position removes all high voltages in the unit. SEC image section voltage is operated by a separate switch.

Construction

Modular construction is used throughout the camera system. There are five major plug-ins used consisting of (1) video processor, (2) vertical deflection, (3) horizontal deflection, (4) blanking processor, and (5) image tube control panel. Each plug-in unit may be operated with a two foot extension cable for ease of maintenance.

The camera control unit is 22″ x 19″ x 10.5″ and weighs approximately 45 lbs. Each of the plug-in modules contained in the CCU are 4″ x 6″ x 13½″. The eight power supply plug-in boards are contained in an area 3½″ x 5″ x 8″. The control panel is 19″ x 3″. The complete power supply occupies an area of 8″ x 6½″ x 19″ and contains two cooling fans, heat sink, low voltage transformer, high voltage transformer and electrolytic filter capacitors, in addition to the 8 plug-in boards. The camera head is 21″ x 8.5″ x 6″. The high voltage image section power supply measures approximately 3″ x 4″ x 5″ and is mounted underneath the chassis.

Available Options

Manual Integration and Single Frame Readout: This is accomplished with push-buttons at the front panel of the blanking module. The first button removes the beam for the length of time the button is held down. The second provides a single frame readout switched, during blanking time. Releasing the first button will return the beam to continuous readout.

Automatic Integration and Single Frame Readout: In this mode integration is accomplished automatically to provide accurately controlled integration from 2 frames to 30 frames and from 1 second to 15 seconds. At the end of this period, the beam is read for one frame then automatically returned to the integration mode.

Interlaced or Sequential Scan: This permits operation of the system at standard 60 cycle interlaced presentation or as 30 cycle non-interlaced presentation. Non-interlaced operation is necessary for "A" scope display of small area measurements.

Digital Line Group Selector: The digital line group selector is a useful tool for accurate amplitude and time measurements of the SEC vidicon readout signal. The device is used with any externally triggered oscilloscope having appropriate vertical response to pass the video of the system. Primarily used for "A" scope display of a point source or small area measurements, the unit may be dialed to display a single horizontal line, any small segment of a single horizontal line, or any small segment of a group of horizontal lines positioned anywhere within the raster area.

The line selector may run continuously when the system is in continuous readout or may be triggered during readout when the integration mode is used.

High Resolution (875-945) or Other Line System: The system may be designed for one specific horizontal line rate as desired.

525-875 Selectable Line Rate: System may be designed to include an arrangement to switch rapidly between two horizontal rates.

Video Polarity Reversal: Available as front panel control.

Sweep Polarity Reversal: Horizontal sweep or vertical sweep singly or both simultaneously.

Aperture Correction: Variable correction ± 10 DB.

Gamma Correction: Gamma curves of .5, .7, and unity.

Automatic Target Control: Maintains video level within 6 DB with 100:1 variation in light level.

Applications

Typical application areas for Secon and other available camera systems are listed below:

- Narrow bandwidth transmission of video information.
- High resolution video display.
- Scan conversion.
- Observation of transient events.
- Amplification of weak images.
- Optical recording and storage of video information.
- Observation under U.V., X-Ray and I.R. radiation.
- Optical monitoring and control of industrial processing in critical environments.

Westinghouse Electric Corporation
Electro-Optical Equipment Department: P.O. Box 10534, Pittsburgh, Pa. 15235
Printed in USA

Westinghouse

Image Orthicon Television Camera System

Model STV-400



General Description

The Westinghouse Model STV-400 image orthicon television system consists of a camera head, camera control unit (CCU), monitor and inter-connecting cables. This image orthicon camera chain is especially well suited, but not limited to, industrial and laboratory applications where light levels are low and beyond the capability of a standard vidicon camera.

Design Features

Resolution: 800 horizontal.

Bandwidth: 20 mc – 875-945 lines; 10 mc – 525 lines.

Sweep Linearity: ±2%.

Modular Construction: Flexibility of application.

EIA Sync Generator: Optional.

Voltage Regulation: 0.1%

Video Output: Two isolated outputs 1.4 volt P-P composite video.

Nuvistor Preamp: Low noise for low light level operations.

Focus Coil Regulation: .05%.

Overscan Capability: Capable of complete overscan of target.

Sweep Protection: Electronic – no relays.

Optional Features

Complete descriptions of the following optional items are found on page 2:

Interlaced or Sequential Scan

Digital Line Group Selector

High Resolution (875-945) or Other Line System

525-875 Selectable Line Rate

Video Polarity Reversal

Sweep Polarity Reversal

Gamma Correction

E.I.A. Sync Generator

August, 1966
New Information
E, C/2212-2214/DB

Image Orthicon Television Camera System

Model STV-400

Camera

The camera contains a deflection, focus, and alignment coil assembly, video preamp with frequency compensation, blanking, electronic sweep protection, and focus (G4) rock circuitry. The camera head contains no sweep circuitry in order to minimize heating and thus help provide stable operation of the system. The video preamp module is nuvistorized to provide the best possible noise figure for low light level operation.

A 50 mm f 1.9 lens, bayonet type mount is normally provided. Other type mounts can be provided. Mechanical focus is provided by movement of the deflection assembly on a ball bearing track. The mechanical focus control is on the rear of the camera head. The head may be rotated during operation to any position desired, limited only by the image orthicon tube environmental parameters.

Camera Control Unit (CCU)

The camera control unit normally is connected to the camera head by a special cable. A 40 foot cable is normally supplied.

The CCU contains the power supply, vertical deflection, horizontal deflection, video processor, and optional EIA sync generator. Image tube control panel is also in the CCU and may be located remote from the CCU. In addition to the 3″ image orthicon tube, this camera control unit has the capability of operating any number of different image tubes by simply choosing the appropriate camera head and making minor circuit changes and additions. These image tubes include the various SEC vidicons, 4½″ image orthicons and image dissector. Therefore, a combination system may be supplied consisting of one camera control unit and several different camera heads incorporating various imaging tube types.

Power Supply

The power supply is of solid state design and is located in the rear of the control unit. It contains 8 plug-in boards consisting of three high voltage regulators, two low voltage regulators, two voltage rectifier boards, and one focus current regulator.

Operating Information

The CCU may be placed in standby condition for warm up or prolonged waiting periods if desired. The standby position removes all high voltages in the unit. Beam stabilization is used to maintain any critical setting of the IO. This equipment may be used within two minutes after power is applied, however, the image orthicon should be allowed to warm up approximately 15 minutes.

Construction

Modular construction is used throughout the camera system. There are five major plug-ins used consisting of (1) video processor, (2) vertical deflection, (3) horizontal deflection, (4) blanking processor, and (5) image tube control panel. Each plug-in unit may be operated with a two foot extension cable for ease of maintenance.

The camera control unit is 22″ x 19″ x 10.5″ and weighs approximately 45 lbs. Each of the plug-in modules contained in the CCU are 4″ x 6″ x 13½″. The eight power supply plug-in boards are contained in an area 3½″ x 5″ x 8″. Control panel is 19″ x 3″. The complete power supply occupies an area 8″ x 6½″ x 19″ and contains two cooling fans, heat sink, low voltage transformer, high voltage transformer and electrolytic filter capacitors, in addition to the 8 plug-in boards. The camera head is 18″ x 7$\frac{3}{16}$″ x 5½″.

Available Options

Interlaced or Sequential Scan: This permits operation of the system at standard 60 cycle interlaced presentation or as 30 cycle non-interlaced presentation. Non-interlaced operation is necessary for "A" scope display of small area measurements.

Digital Line Group Selector: The digital line group selector is a useful tool for accurate amplitude and time measurements of the I.O. readout signal. The device is used with any externally triggered oscilloscope having appropriate vertical response to pass the video of the system. Primarily used for "A" scope display of a point source or small area measurements, the unit may be dialed to display a single horizontal line, any small segment of a single horizontal line, or any small segment of a group of horizontal lines positioned anywhere within the raster area.

The line selector may run continuously when the system is in continuous readout or may be triggered during readout when the integration mode is used.

High Resolution (875-945) or Other Line System: The system may be designed for one specific horizontal line rate as desired.

525-875 Selectable Line Rate: System may be designed to include an arrangement to switch rapidly between two horizontal rates.

Video Polarity Reversal: Available as front panel control.

Sweep Polarity Reversal: Horizontal sweep or vertical sweep singly or both simultaneously.

Gamma Correction: Gamma curves of 0.5, 0.7, and unity.

E.I.A. Sync Generator: 525, 729, 875, 945 lines.

Applications

Typical application areas of an image orthicon camera and other available systems are listed below:

- Narrow bandwidth transmission of video information.
- Hi resolution video display.
- Scan conversion.
- Observation of transient events.
- Amplification of weak images.
- Optical recording and storage of video information.
- Observation under U.V., X-Ray and I.R. radiation.
- Optical monitoring and control of industrial processing in critical environments.

Westinghouse Electric Corporation
Electro-Optical Equipment Department: P.O. Box 10534, Pittsburgh, Pa. 15235
Printed in USA

Westinghouse

Electron Bombarded Silicon Television Camera Tubes

- Silicon diode array targets
- 16mm, 25mm and 40mm fiber optic inputs
- Electrostatic image sections
- 1" and 1.5" all-magnetic reading sections
- High EBS sensitivity
- Gating and variable magnification capability

1. General Description

The Westinghouse family of EBS tubes is a high performance group of devices employing silicon diode array charge storage targets operating in the Electron Bombarded Silicon mode. The tubes are designed primarily for use in high performance low light level television systems and in most cases provide a socket replacement for corresponding Westinghouse SEC camera tube types. The principal features of this family of devices are summarized in the table shown on page 3. Each of the tubes has an electrostatically focussed image section and a magnetically focussed and deflected reading section. Input formats range from 16mm in diameter to 40mm in diameter.

The outstanding characteristic of EBS tubes is very high sensitivity which is derived from the high electron bombardment induced gain of the silicon diode array target.

The tube operates in the following manner. An optical image focussed onto the input surface of the fiber optic window of the tube causes the emission of electrons from the photocathode on the inner surface of the window. These electrons, which are emitted in direct proportion to the intensity of the optical image, are accelerated by the photocathode voltage (typically -10 kV) toward the silicon diode array target. There, each electron gives rise to approximately one electron hole pair for each 3.5 eV of energy dissipated in the target.

The target consists of a two-dimensional array of P-N diodes formed on an N-type silicon wafer approximately 15 microns thick. It is positioned in the tube with the diode array facing the reading beam which maintains the diode surfaces near gun cathode potential. The diodes may be reverse-biased by applying a positive potential to the N-type substrate which also acts as the target signal plate. The diode depletion regions thus formed, provide an array of capacitors. Holes, created by the absorption of the incident photoelectrons diffuse towards the diode depletion regions and discharge them. The video signal is generated by the recharging of the diodes when scanned by the reading beam.

The following paragraphs describe the operating characteristics of the EBS family. Detailed performance on each tube type is contained on the specific data sheet for that type.

2. Photocathode Response

The photocathode employed in the Westinghouse family of EBS tubes is the S-20 type for which a typical spectral response curve is shown in Figure 1. Peak quantum efficiency ranges from 15 to 20% and falls within the wave-length range of 4200Å to 4600Å.

3. EBS Target Gain

The gain of the EBS target is a strong function of the potential between the photocathode and target. Photoelectrons incident on the target produce charge carriers (electron-hole pairs) at the rate of one carrier pair on the average for each 3.5 eV of electron kinetic energy dissipated in the target. The efficiency of collection of the charge carriers then determines the target gain. With increasing photoelectron kinetic energy the number of charge carriers generated increases along with their collection efficiency. The resulting target gain characteristic is shown in Figure 2 as percent of the target gain occuring for a photocathode to target potential of -10kV. Typical gain at -10kV is 1,700.

4. Tube Sensitivity

Sensitivity of EBS tubes is determined by the photocathode response and target gain. For 2870° K radiation incident on the tube faceplate, at a photocathode to target potential difference of -10kV, typical sensitivity is 315,000μA/lm or 6300mA/w–2854° K. At other photocathode potentials the sensitivity varies as the target gain. Figure 2 shows the dependence of typical tube sensitivity on photocathode voltage as a percent of the value at -10kV. The tube sensitivities are independent of the applied target bias voltage over the useful range 6 to 20 volts. The light transfer chacteristic is specified by the tube sensitivity since the gamma of the tube is unity. Signal currents of 1,000nA or greater are achievable.

5. Dark Current

Dark current exhibited by EBS tubes is predominantly that associated with diode thermal leakage current which is a function of target bias voltage and temperature. Typical dependence of the thermal dark current density on target voltage at 25°C as measured by the pulse comparator method is shown in Figure 3. Measurements of dark current made with a D.C. meter are approximately 23% lower. Dark current doubles for approximately each 10° C rise in target temperature.

6. Lag and Moving Scene Effects

Response of the EBS tubes to moving scenes is influenced by signal mixing and lag.

Signal mixing is a result of the spatial superposition of charge images on the target which occurs during the signal integration

January 1972
New Information
TC-2237-2

Westinghouse

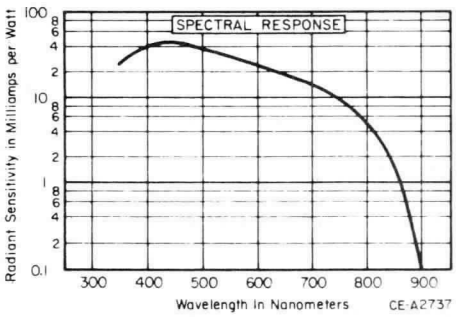

FIGURE 1

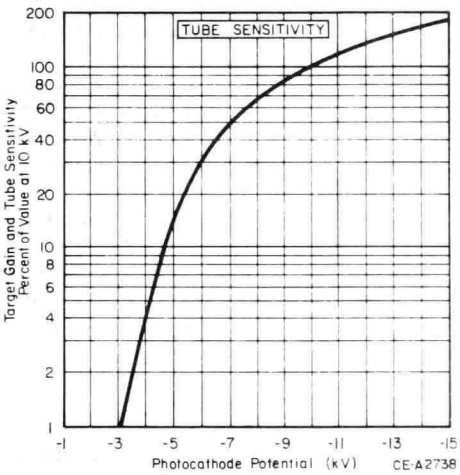

FIGURE 2

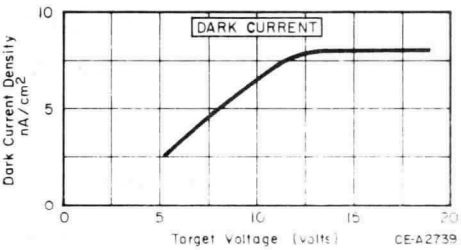

FIGURE 3

interval. This effect is fundamental and common to all tubes employing charge storage targets regardless of type.

Lag is a result of the inability of the read beam of the tube to completely recharge the target during one scan. It is associated with the storage capacitance of the target and the read beam acceptance characteristic. Lag is specified separately for each tube type. It is defined as the ratio of the signal current obtained in the third field, (50ms) after removal of illumination, to the initial signal current, expressed as a percentage.

Signal mixing and lag cause a reduction in the sensitivity of the tube to moving images. At very low illumination levels the reduction in sensitivity is caused primarily by lag whereas at high illumination levels signal mixing is the principle reason for loss in dynamic sensitivity.

The combined effects of signal mixing and lag are illustrated by comparisons of resolution vs illumination curves obtained with the use of static and moving resolution test charts. These curves are shown separately for the various tube types.

7. Picture Quality

Over the recommended operating ranges of the Westinghouse EBS tubes, excellent picture quality is obtained. Halation is minimal. Slight image growth due primarily to carrier concentration gradients in the target may occur at very high illumination levels.

Blemishes are generally small bright spots due to shorted or leaky diodes in the target or small dark spots due to imperfections in the photocathode. Total blemish limits are specified for each tube type with regard to number, location, and size.

8. Target Burn Due To Intense Illumination

Except under very unusual conditions target burn due to intense illumination does not occur. Threshold for irreversible target damage is about 10^5 fcs or 5×10^4 Ws/M^2 of 2870°K radiation with the tube operating at a photocathode potential of -10kV. For such damage the relation between time and illumination is reciprocal.

9. Environmental

All EBS tubes will withstand the vibration and shock levels of MIL-E-5400 without damage and are capable of operating under the most severe vibration levels of Curve IV. The tubes operate over an ambient temperature range of +55° to -54°C. Operation at temperatures in excess of 55° C is not recommended due to possible adverse effects on the photocathode response.

Electron Bombarded Silicon Television Camera Tubes

WESTINGHOUSE FAMILY OF EBS TELEVISION CAMERA TUBES

Westinghouse EBS CAMERA TUBES (W) Type Number	Input Size mm	Gun Bulb Diameter Inches	Overall Length Inches	Typical Limiting Resolution TVL/Rt.Ht.	Sensitivity @ 10 kV μA/fc	Dark Current nA	Image Lag % @ 300 nA	Image Section Description	Reference Data Sheet Number
WX31960 	16	1	7.5	700	430	11	9	Triode	TD86-808
WX31792 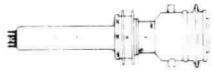	25	1	8.6	700	1050	11	9	Fixed Focus Diode	TD 86-809
WX31793 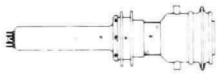	25	1	9.2	850	1050	17	11	Fixed Focus Diode	TD86-810
WX31841 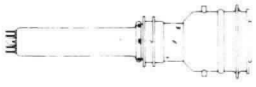	40	1.5	13.1	950	2700	27	15	Fixed Focus Diode	TD86-812
WX31911 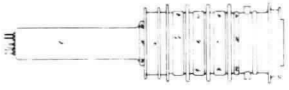	40	1.5	14.0	950	2700	27	15	Zoomable (2.0 to 1.0) and Gateable Pentode	TD86-813

ET-1865

Electron Bombarded Silicon
Television Camera Tubes

Westinghouse Electric Corporation
Electronic Tube Division, Elmira, N. Y. 14902
Printed in U. S. A.

Westinghouse

Storage Vidicon

High Resolution Permachon
1" Diameter

Type: WX-5123
Spectral Response 3000 to 7000 Angstroms
Magnetic Focus & Deflection

General Characteristics

The WX-5123 is a 1" storage vidicon that gives non-destructive readout for many minutes after a single optical exposure when scanned at normal (30 frames per second) rates. Continuous readout of the same scene can be achieved for longer than 30 minutes with little degradation of the stored information. The tube can be erased in less than a second by cutting off the beam and flooding the faceplate momentarily with light.

The WX-5123 features separate connections for Grid 4 and Grid 3 allowing Grid 4 to be operated at higher potentials than Grid 3. As a result, the WX-5123 offers higher resolution and more uniform signal output than the tube it replaces, the WL-7383. Gray scale rendition is comparable to that of a conventional vidicon.

The sensitivity of the WX-5123 is such that when allowed to integrate very low light level scenes it offers a noticeable improvement on the performance of the human eye. It is convenient in most applications to regard the tube as a sensitive photographic film in that the exposure time is dependent upon the scene illumination.

General Data

Electrical

Cathode	Coated Unipotential	
Heater:		
Voltage (ac or dc)	6.3 ± 10%	Volts
Current	0.6	Ampere
Direct Interelectrode Capacitance:		
Signal Electrode to All Other Electrodes	4.5	pF
Spectral Response	From 3000 to 7000 Angstroms	
Photoconductive Layer:		
Orientation of Tube to Scan	Proper orientation is obtained when the horizontal scan is essentially parallel to the plane passing through the tube axis and short index pin.	
Focus Method	Magnetic	
Deflection Method	Magnetic	

Mechanical

Overall Length	6.25" ± 0.25"
Greatest Diameter	1.125" ±0.010"
Bulb	T-8
Base	Small-Button, 8-Pin (JEDEC E8-11)
Operating Position	Any
Socket	Cinch #54A18088 or Equiv.
Net Weight (Approx.)	2.1 Ounces

Accessories

Focusing Coil. .Cleveland Electronics No. VF-115-4AL or Equivalent.
Deflecting Yoke . . . . . Cleveland Electronics No. VYL-160 or Equiv.
Alignment Coil . . . . . .Cleveland Electronics No. VA-132 or Equiv.

Maximum Ratings

Absolute Maximum Values

Faceplate:		
Illumination	1000 max.	Ft-C
Temperature	45 max.	°C
Target Voltage	25 max.	Volts
Grid 4 Voltage	1000 max.	Volts
Grid 3 (Beam Focus) Voltage	1000 max.	Volts
Grid 2 Voltage	750 max.	Volts
Grid 1 Voltage:		
Negative Bias Value	300 max.	Volts
Positive Bias Value	0 max.	Volts
Heater-Cathode Voltage:		
Heater Negative with Respect to Cathode	125 max.	Volts
Heater Positive with Respect to Cathode	10 max.	Volts

Typical Operation (For Scanned Area of 1/2" × 3/8")

Faceplate:			
Illumination	See Performance Notes		
Temperature	25 to 35		°C
Target Voltage (Note 1)	5 to 15		Volts
Grid 4 Voltage	500	750	Volts
Grid 3 (Beam Focus) Voltage	300	450	Volts
Grid 2 Voltage	300	300	Volts
Grid 1 Picture Cutoff Voltage (Note 2)	−45 to −100	−45 to −100	Volts
Peak-to-Peak Blanking Voltage: (Min.)			
Applied to Cathode	20	20	Volts
Applied to Grid 1	75	75	Volts
Focus Coil Field Strength	41 ± 4	52 ± 4	Gauss
Limiting Center Resolution	800	900	TV Lines
Aperture Response	See Figure 4		

Notes

1. Optimum storage is achieved by operating about 12 volts. Storage time is decreased as signal electrode voltage is decreased.
2. With no blanking voltage on Grid 1.

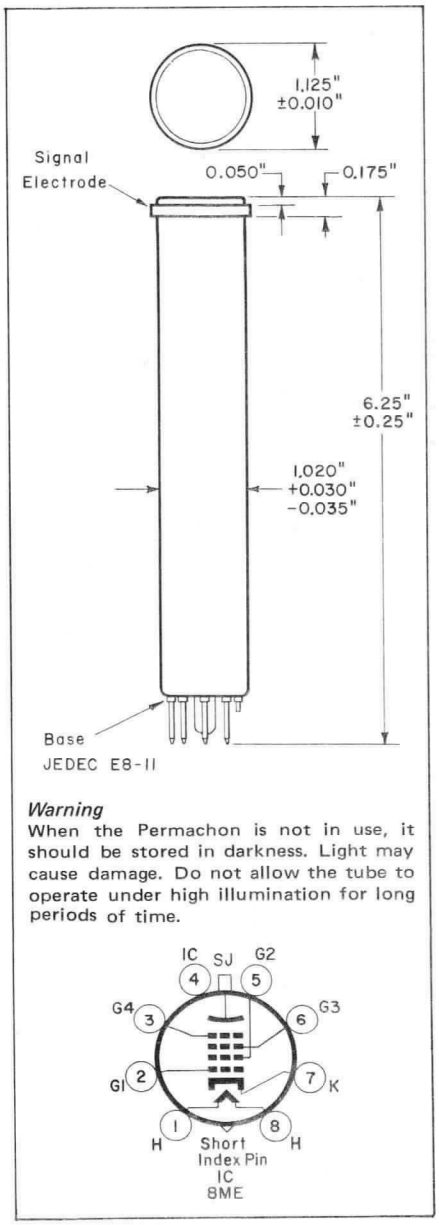

Warning

When the Permachon is not in use, it should be stored in darkness. Light may cause damage. Do not allow the tube to operate under high illumination for long periods of time.

April 1968
New Information
S6−3A−11C, S5−10C, WI−1300

Westinghouse

Performance Notes

For short exposures the signal obtained during readout will normally be less than the signal obtained during the writing cycle. Because of this a slight overexposure may be desirable to obtain the best quality picture. During longer integrations, the outputs are nearly identical and no overexposure is necessary.

The sensitivity of the tube is such that with an exposure time of 1 second, and illumination of 1 foot candle, an excellent stored image is obtained. Shorter exposure times will require proportionally more illumination. With exposure times of less than 10 milliseconds, however, the contrast of the stored image is somewhat less than normal.

Saturation of the tube occurs when too much light is allowed to reach the target during a given exposure time. This results in a reversal of polarity of the image and gives a "negative" picture output. This is corrected by erasing the image in the normal method and reducing the illumination until a "positive" output is obtained.

The storage time of the tube can be varied from less than 1 second to more than 30 minutes by adjustment of the target voltage. Best storage is obtained with approximately 10 to 12 volts on the target and when the faceplate temperature is kept below 30°C. Figure 1 shows a typical dark current characteristic of the WX-5123.

Degradation of the stored image appears as a loss of contrast with the black areas gradually building up to the white level. This is caused by the change of dark current during the storage time. Figure 2 shows this characteristic. Figure 3 shows the change of contrast with storage time for a typical WX-5123.

The resolution of the tube remains fairly constant over the storage time. For long storage times however, the change in contrast of the image will start to affect the limiting resolution observed. A change in monitor contrast will usually improve this situation. Figure 4 shows a typical square-wave response curve of the WX-5123.

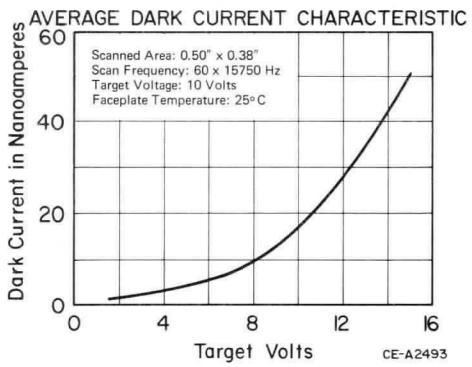

FIGURE 1

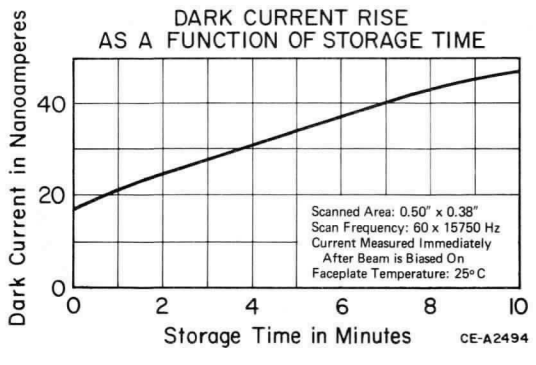

FIGURE 2

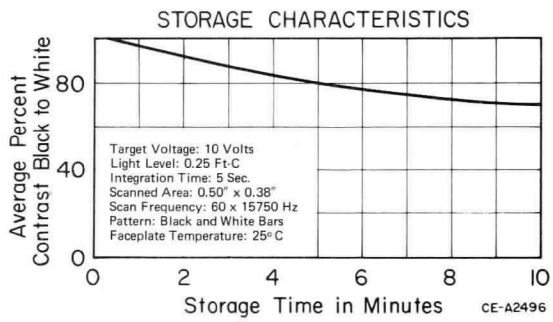

FIGURE 3

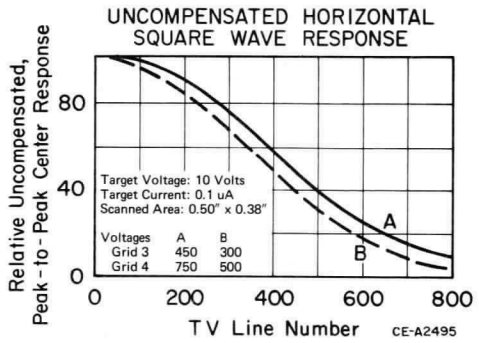

FIGURE 4

Storage Vidicon

High Resolution Permachon
1" Diameter

Type: WX-5123
Spectral Response 3000 to 7000 Angstroms
Magnetic Focus & Deflection

Set-Up Procedure

The following notes are given to aid in setting-up the WX-5123:

1. A shutter is necessary for proper operation. Since the tube will integrate very low light levels, care must be taken to keep light from the faceplate during readout.
2. An f/1.5-2 inch lens is satisfactory.
3. With shutter closed, adjust target voltage (with respect to cathode) to 1 to 3 volts. At this value, no storage should take place and the tube will operate like a "laggy" vidicon.
4. Adjust the grid bias to just charge the target to cathode potential.
5. Open shutter and adjust f-stop of lens to obtain an image on the monitor. Too much light will cause the picture to appear "washed-out". If the target voltage is properly adjusted, it will be noticed that only the center area of the picture will give any information.
6. Adjust alignment controls to center this brighter area in the scanned area. This is usually all that is necessary to align the tube.
7. Adjust the electrical and optical focus controls for best resolution. Proper adjustment of the target voltage will give a picture with enough contrast for resolution adjustment. Too high a target voltage will cause storage and make it difficult to adjust the optical focus.
8. Close shutter, adjust target voltage to 10 volts and erase.
9. Erasure: There are two ways in which erasure can be accomplished.

   A. With the beam cutoff, the faceplate is uniformily flooded with light. This process may be carried out in less than a second with about 20 foot - candles illumination. Associated with this method is the need to allow time for priming the storage layer after erasure and before the next exposure. Five frames of normal television scanning are sufficient for this priming cycle. The erase lights can be mounted on the back of the camera front plate.

   B. The information may also be erased by just cutting the beam off. This method, however, may require 5 to 10 seconds.

10. Select the proper exposure to give a positive picture output by controlling the length of exposure and/or the illumination.
11. Information may now be written in, stored for the desired time, and erased at will.

System Considerations

The camera housing should incorporate features not usually found in TV cameras. The camera housing should be light tight. The most convenient place to install the erasing light source may be within the camera housing. Considering the Permachon as photographic film, provision must be made for intermittant exposure during writing times and complete light cutoff during readout.

SPECTRAL RESPONSE CHARACTERISTIC

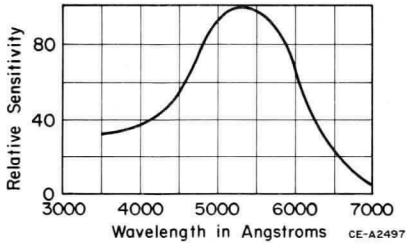

FIGURE 5

If the apparent storage of the Permachon is shorter than normal, this may be due to either equipment limitations, which may be corrected, or, to improper mode of operation.

Equipment design factors which can result in apparent low storage include target voltage supply impedance and excessive temperature. Any high impedance in series with the target load should be removed from the circuit. Such an impedance will result in undesirable target voltage limiting. Automatic target voltage adjustment circuits should also be removed or disabled. Overheating of the Permachon can result in loss of storage. The associated circuitry should be heat shielded such that the ambient temperature around the Permachon does not exceed 45°C.

The high output signal from the Permachon can result in amplifier overload in commercial vidicon cameras. Reduction of target load impedance is one possible way of preventing amplifier overload but results in a degradation of signal-to-noise ratio. A more satisfactory solution is to reduce the gain of the system or inject the signal after the very-low-level preamplifier stage. The method used will depend on where, in the amplifier, the overload is taking place.

Storage Vidicon

High Resolution Permachon
1″ Diameter

Type: WX-5123
Spectral Response 3000 to 7000 Angstroms
Magnetic Focus & Deflection

Westinghouse Electric Corporation
Electronic Tube Division, Elmira, N. Y. 14902
Printed in U. S. A.

Westinghouse

2'' Vidicon

High Resolution

Type: WX-5140
Spectral Response-S-18
Magnetic Focus & Deflection

Application

The WX-5140 is a 2-inch diameter high resolution vidicon tube designed for operation in a standard 3-inch image orthicon magnetic deflection system. It features high resolution, more uniform resolution and more uniform signal output when operated at high voltage.

General

Heater, For Unipotential Cathode	
Voltage	6.3 ± 10% Volts
Current	0.6 Amperes
Direct Interelectrode Capacitance: (maximum)	
Target To All Other Electrodes	7.0 pF
Spectral Response	S-18
Focusing Method	Magnetic
Deflection Method	Magnetic
Overall Length	12.25" ± .25"
Greatest Diameter	2.50" ± .050"
Base	EIA B14-45
Operating Position	Any

Maximum Ratings

Absolute Maximum Values

For a Scanned Area of 0.84" x 1.2" (1.4" Diagonal)

Grid 3 and Grid 4 Voltage	2500 Volts
Grid 2 Voltage	400 Volts
Grid 1 Voltage:	
Negative Bias Value	125 Volts
Positive Bias Value	0 Volts
Peak Heater-Cathode Voltage:	
Heater Negative to Cathode	125 Volts
Heater Positive to Cathode	10 Volts
Dark Current	0.5 μA
Peak Target Current	1.0 μA
Faceplate:	
Illumination	1000 Ft-C
Temperature, maximum	60 °C

Typical Operating Conditions

For a Scanned Area of 0.84" x 1.12" (1.4" Diagonal)	
Grid 4 Voltage	2500 Volts
Grid 3 Voltage	1800 Volts
Grid 2 Voltage	300 Volts
Grid 1 Voltage for Picture Cutoff: (Note 1)	−45 to −100 Volts
Average Gamma of Transfer Characteristics For Signal-Output Current Between 0.05 μA and 0.5 μA	0.65
Minimum Peak-to-Peak Blanking Voltage:	
When Applied to Grid 1	75 Volts
When Applied to Cathode	20 Volts
Field Strength at Center of Focusing Coil, Approx.	40 Gauss
Faceplate Illumination (Approx.)	1 Ft-C
Dark Current	.02 μA
Target Voltage	25 to 60 Volts
Average Signal-Output Current	0.4 to 0.5 μA

Note

1. With no Blanking on Grid 1.

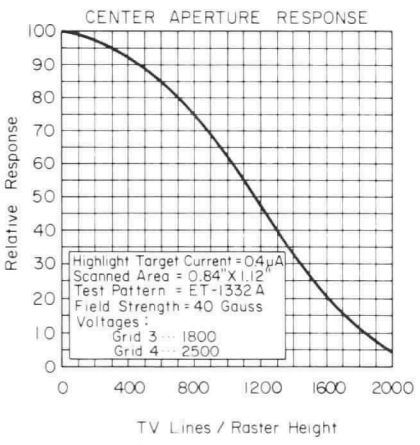

CE-A2517

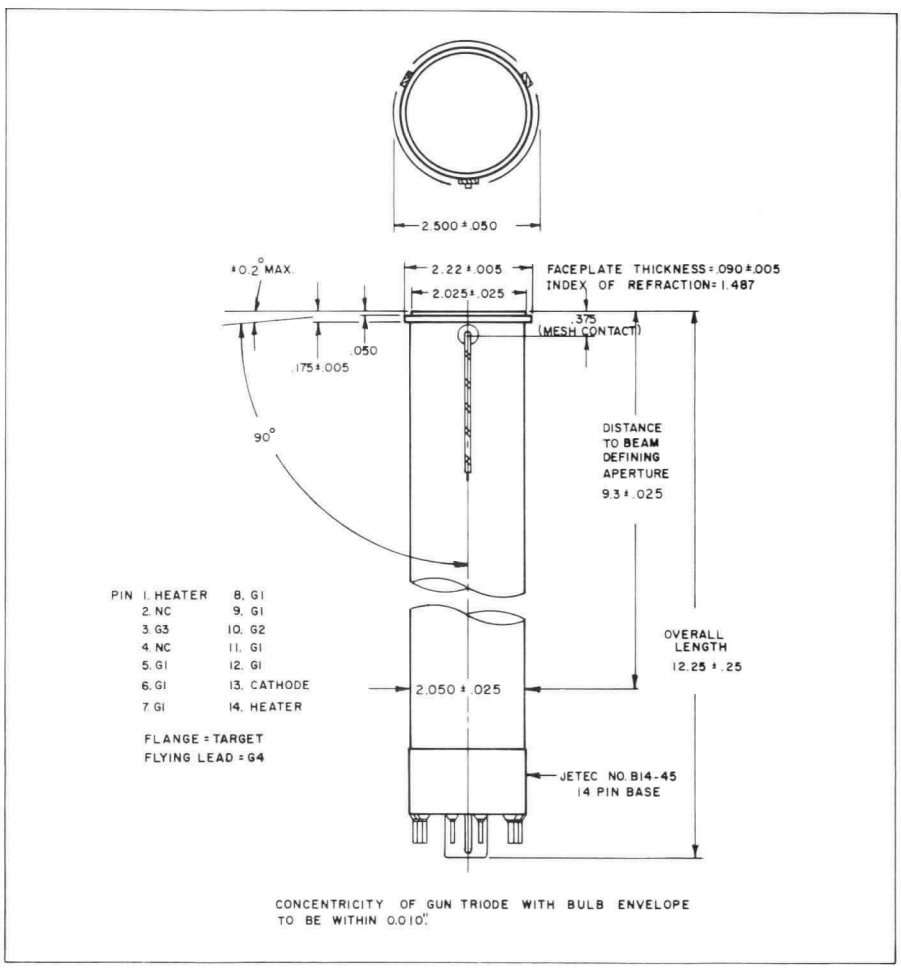

Westinghouse Electric Corporation
Electronic Tube Division, Elmira, N.Y. 14902
Printed in U.S.A.

April 1968
New Information
S6-3A-11C, S5-10C, WI-1300

X-Ray Vidicon

Type: WX-5157 (Supersedes WX-5129)

High Resolution
Low Lag
Magnetic Focus & Deflection

Westinghouse

Application

The WX-5157 is a direct X-Ray Vidicon intended for industrial use to inspect components and assemblies by displaying an image of their internal structure on a television monitor. It converts X-radiation incident on the faceplate directly into a video signal.

When used with a vidicon high-resolution TV system and a beryllium window X-ray tube, with an X-ray focal spot to vidicon target distance of no less than 6 inches, the WX-5157 is capable of the following performance:

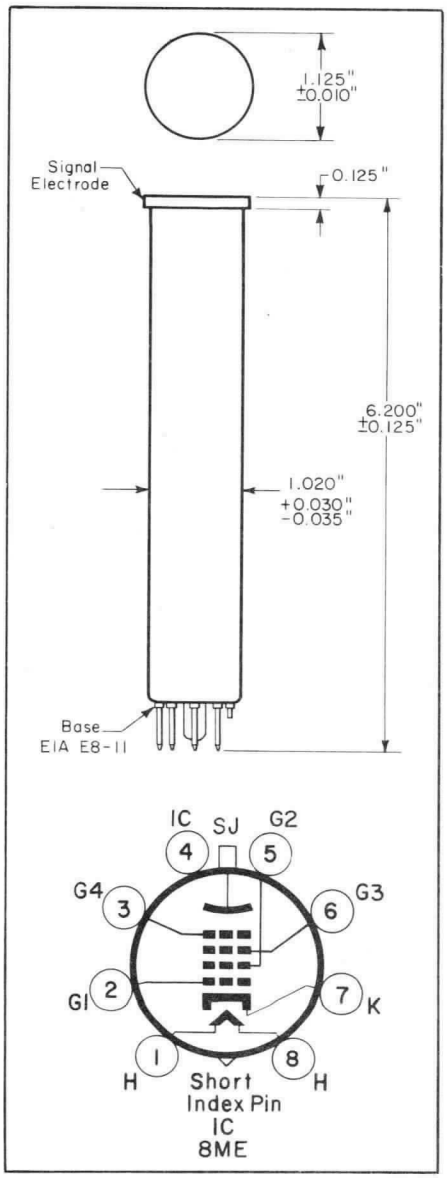

The spectrum of X-radiation to be used for the following performance tests is that obtained from 150 kV at 4 mA on the beryllium window X-ray tube.

1. Detect a 0.020″ diameter hole in a 0.010″ thick aluminum penetrameter placed on 0.5″ thick aluminum.
2. Detect a 0.010″ diameter hole in a 0.005″ thick aluminum penetrameter placed on 0.25″ thick aluminum.
3. Resolve 500 mesh stainless steel wire screen (wire diameter 0.001″, spacing 0.001″).

The WX-5157 is capable of monitoring both stationary as well as in-motion phenomena. The lag is such that it will easily permit in-motion observation when the object has a velocity relative to the detector of 12 inches per minute. At this scanning rate it is possible to resolve 300 mesh wire.

Data

Electrical

Cathode	Coated Unipotential
Heater:	
Voltage (ac or dc)	6.3 ± 10% Volts
Current	0.15 Ampere
Direct Interelectrode Capacitance:	
Signal Electrode to all Other Electrodes	4.5 pF
Focusing Method	Magnetic
Deflection Method	Magnetic

Mechanical

Overall Length	6.200″ ± 0.125″
Greatest Diameter	1.25″ ± 0.010″
Bulb	T-8
Base	Small-Button, 8-Pin (JEDEC E8-11)
Operating Position	Any
Orientation of Tube to Scan	Proper orientation is obtained when the horizontal scan is essentially parallel to the plane passing through the tube axis and short index pin.
Maximum Useful Diagonal of Rectangular Image (4 x 3 Aspect Ratio)	0.62″

Maximum Ratings

Absolute Maximum System

Signal-Electrode Voltage	To Be Specified For Each Tube	
Grid 4 & Grid 3 Voltage	1000 max.	Volts
Grid 2 Voltage	500 max.	Volts
Grid 1 Voltage:		
Negative Bias Value	125 max.	Volts
Positive Bias Value	0 max.	Volts
Heater-Cathode Voltage:		
Heater Negative with respect to Cathode	125 max.	Volts
Heater Positive with respect to Cathode	10 max.	Volts
Faceplate Temperature	45 max.	°C
Target Current	0.4 max.	μA

Typical Operation

Signal-Electrode Voltage	20 to 40	20 to 40	Volts
Grid 4 Voltage	400	900	Volts
Grid 3 Voltage	300	675	Volts
Grid 2 Voltage	300	300	Volts
Grid 1 Voltage:			
For Picture cut-off (Note 1)	−45 to −100	−45 to −100	Volts
Minimum Peak-to-Peak Blanking Voltage:			
When Applied to Grid 1	75	75	Volts
When Applied to Cathode	20	20	Volts
Field Strength at Center of Focusing Device	40	60	Gausses
Field Strength of Adjustable Alignment Coil	0 to 4	0 to 4	Gausses
Highlight Signal-Output Current	0.005 to 0.2	0.005 to 0.2	μA

Note

1. With no blanking voltage on Grid 1.

Defects In Photoconductive Layer

When the raster size on the tube is adjusted to 0.38″ x 0.50″ and the raster image is displayed on a 17″ monitor, and the tube is activated by X-rays, defects in the photoconductive layer, as seen and measured on the monitor shall be no more than:

One defect of size 0.06″ diameter.
Four defects of size 0.03″ diameter.
Defects outside the raster area are of no concern.

Westinghouse Electric Corporation
Electronic Tube Division, Elmira, N.Y. 14902
Printed in U.S.A.

August 1970
Supersedes TD 86-864 dated April 1970
TC−2237-2

Westinghouse

Display Storage Tube

Type: WX-5314★

Single Writing Gun
60 Second Viewing Time
4" Display Diameter
Electrostatic Focus & Deflection
90 Lines/Inch Resolution

Application

The WX-5314 is a display storage tube capable of electrically writing and storing a moderately-bright, flicker-free display on a 4 inch diameter fluorescent screen.

The viewing screen brightness exceeds 200 foot-lamberts with 5 kilovolts accelerating potential and a writing speed of 10000 inches per second. The WX-5314 has a storage time of 60 seconds which permits storage and display of very high speed transients for liesurely examination. In applications of this type and others having written information of a repetitive character, the ability of the tube to integrate successive weak signals is of great utility.

Longer storage periods may be obtained by pulsing the flood gun. If the pulse rate is high enough, no flicker will be observed. In this manner, storage times up to 30 minutes may be achieved with some loss of brightness. The display would still be clearly legible in a lighted room.

The WX-5314 is suitable for applications such as airborne fire-control and navigational radar, weather radar, airport surveillance, transient studies and visual-display element in narrow-band-width data transmission systems.

The WX-5314 is designed for military use and is therefore capable of meeting appropriate military specifications. The entire tube is potted within a salt spray resistant magnetic shield with synthetic silicon rubber material. Protection against mechanical shock, vibration, humidity and leakage between bulb terminals is thereby achieved. The backing electrode, collector and collimating electrode have 24 inch, color-coded flying leads. One writing gun and a flood gun are mounted in the WX-5314. The writing gun has electrostatic focus and deflection.

Mechanical

Minimum Useful Viewing Diameter	4"
Maximum Overall Length	14.87"
Maximum Seated Length	14.25"
Greatest Shield Diameter	5.25" ± 0.06"
Viewing Screen Terminal	Flexible Cable
Base	EIA B14-45
Mounting Position	Any

Optical

Phosphor:	
Type	High Visual Efficiency, Aluminized P20
Fluorescence	Yellow-Green
Phosphorescence	Yellow-Green
Persistence	Short
Faceplate	Optical Glass, Ground and Polished Flat

Electrical

Storage:				
Type	Half-Tone or Line			
Mode	Control of Transmission			
Type of Erasure	Overall			
Write Gun:				
Cathode	Coated Unipotential			
Heater:	Min.	Bogey	Max.	
Voltage (ac or dc)	5.67	6.3	6.93	Volts
Current	0.50	0.60	0.70	Amperes
Focusing Method	Electrostatic			
Deflection Method	Electrostatic			

Flood Gun:				
Cathode	Coated Unipotential			
Heater:	Min.	Bogey	Max.	
Voltage	5.67	6.3	6.93	Volts
Current	0.50	0.60	0.70	Amperes
Warm-up Time before applying High Voltage	.30	—	—	Seconds
Focus and Deflection	Undeflected, Collimated "Flood" Gun			

Direct Interelectrode Capacitances: (External Integral Shield Grounded)

Writing Gun Grid 1 to All Internal Elements	8 max. pF
Deflection Electrode 1 to All Internal Elements	8 max. pF
Deflection Electrode 2 to All Internal Elements	8 max. pF
Deflection Electrode 3 to All Internal Elements	8 max. pF
Deflection Electrode 4 to All Internal Elements	8 max. pF

Maximum Ratings

Absolute Maximum Values

Write Gun	
(Reference Voltage is Write Gun Cathode)	
Grids 2 & 4 Voltage (Note 1)	3000 max. Volts
With Respect to Flood Gun Cathode	200 max. Volts
Grid 3 Voltage (Focus)	2000 max. Volts
Negative with Respect to Flood Gun Cathode	2600 max. Volts
Grid 1 Voltage:	
Negative Bias Value	200 max. Volts
Positive Bias Value	0 max. Volts
Positive Peak Value	2 max. Volts
Cathode Voltage Negative with Respect to Flood Gun Cathode	2800 max. Volts
Voltage Between any Deflection Electrode and Grids 2 & 4: (Note 1)	
Positive or Negative Peak Value	500 max. Volts
Peak Heater-Cathode Voltage:	
Heater Positive or Negative with respect to Cathode	125 max. Volts
Flood Gun:	
(Reference Voltage is Flood Gun Cathode)	
View Screen Voltage	5000 max. Volts
Grid 5 Voltage (Backing Electrode)	35 max. Volts
Grid 4 Voltage (Collector Electrode)	300 max. Volts
Grid 3 Voltage (Collimating Electrode) & Grid 2 Voltage (Accelerating Electrode)	200 max. Volts
Grid 1 Voltage:	
Negative Bias Value	150 max. Volts
Positive Bias Value	0 max. Volts
Peak Heater-Cathode Voltage:	
Heater Positive or Negative with Respect to Cathode	125 max. Volts

Limiting Circuit Values

View Screen Series Current-Limiting Resistance	1.0 min.	Megohm
Backing Electrode Circuit Resistance	5000 max.	Ohms
Collector Electrode Unbypassed Series Current-Limiting Resistance	22000 min.	Ohms
Grid 1 Circuit Resistance	1.0 max.	Megohm
Resistance in Any Deflecting Electrode Circuit (Note 2)	0.1 max.	Megohm

★ The WX-number identifies a specific laboratory design; the design and, consequently, the data and type number are subject to change. No obligations are assumed to manufacture this particular device in the future unless otherwise arranged. These drawings and specifications are the property of Westinghouse Electric Corporation, Electronic Tube Division, and shall not be reproduced or copied or used as the basis for the manufacture or sale of apparatus and/or devices without permission.

November 1968
Supersedes WX-5314 dated March 1, 1963
S6–3A–11C, S5–10D, WI–1000

Westinghouse

Environmental Limits

Atmospheric Pressure	60 max.	PSI
Altitude (Non-pressurized)	60000 max.	Feet
Temperature:		
Operating	−35 to +71	°C
Non-Operating	−62 to +85	°C
Relative Humidity (Non-Operating)		95%

Vibration ..... Sinusoidal Vibration from 5 to 18 cycles per second with a total excursion of 0.30 inches and from 18 to 500 cycles per second with 3 g acceleration will not damage the tube.

Typical Operating Conditions and Characteristics

Note: Damage to the tube may occur if the Write-Gun beam is turned on before the Flood Gun-beam current has reached normal operating value or if the Flood-Gun beam is turned off before the Write-Gun beam.

Reference Point for DC Voltages is Ground

Write Guns:		
Grids 2 & 4 Voltage (Note 1)	90 to 110	Volts
Grid 3 Voltage (Focus)	−2000 to −2300	Volts
Grid 1 Voltage to Writing Gun Cathode	0 to −70	Volts
Cathode Voltage	−2400	Volts
Grids 2 & 4 Current (Note 1)	100	μampere
Grid 3 Current (per gun)	−10 to 5	μampere
Cathode Current	See Gun Transfer Characteristic	
Deflection Factors:		
Deflection Electrodes 1 & 2 (Note 3)	72 to 88	Volts dc/Inch
Deflection Electrodes 3 & 4 (Note 3)	72 to 88	Volts dc/Inch
Focused Beam Position (Note 4)	0.5	Inch

Flood Gun:	Range	Typical	
View Screen Voltage	3000 to 5000	5000	Volts
Grid 5 Voltage (Backing Electrode)	2 to 15	2	Volts
Grid 4 Voltage (Collecting Electrode)	150 to 300	200	Volts
Grid 3 Voltage (Collimating Electrode) (Note 5)	5 to 150	60	Volts
Grid 1 Voltage	0 to −50	0	Volts
Cathode		Grounded	
View Screen Current		250	μamperes
Grid 5 Current (Backing Electrode)		2	μamperes
Grid 4 Current (Collector Electrode)		1.5	Ma.
Grid 3 Current (Collimating Electrode)		200	μamperes
Cathode Current		2	Ma.

Notes

1. Grids 2 & 4 of the Write Gun are internally connected together.
2. Approximately equal resistances should be used in each deflection electrode circuit.
3. For other values of cathode to Grids 2 & 4 Voltages, the deflection factor is approximately 32 ± 10% volts d-c per inch per kilovolt of cathode to Grids 2 & 4 Voltage.
4. With all deflection electrodes tied to Grids 2 & 4, and erasure at a convenient value the undeflected, focused spot will fall within a circle of 0.5 inch radius, centered on the tube faceplate.
5. Grid 2 of the flood gun is internally connected to Grid 3 (Collimating Electrode).

The Prime Operation

The tube is said to be primed when the entire surface of the storage dielectric is charged uniformly to flood-gun-cathode potential. The backing electrode/storage grid then has minimum cutoff effect on the flood beam electrons and the entire viewing screen is uniformly illuminated to saturation brightness. If the storage surface is then erased to cutoff by applying a positive pulse train to the backing electrode, the flood beam electrons will just be prevented from passing through to the viewing screen. The surface, then, will be completely free of past history. This is the starting point for all accurate measurements on the tube.

The fastest and most effective method of priming the surface is by momentarily increasing the backing electrode potential by about 200 volts. This can most conveniently be done by switching the backing electrode lead to collector potential, leaving it there one or two seconds then switching it back to its own potential of 10 volts.

One note of caution; because the flood gun beam current reaches a maximum value during the time when the two electrodes are connected together, they should not be allowed to remain so connected for long periods (over 10 or 15 seconds). Leaving the tube in the prime condition for extended periods will result in a loss of light output due to viewing screen damage and in temporary reduction in viewing duration due to evolution of excessive amounts of gas from the viewing screen. Viewing duration can be restored by leaving the tube in the erase mode for 15 or 20 minutes - allowing the getters to absorb the excess gas, but any damage to the viewing screen cannot be repaired.

Performance Data

Viewing Time	60	Seconds
Erasing Time (Flood Gun Erasure)	75	Milliseconds
Display Uniformity (Δep min.)	1	Volt
Writing Speed	10000	Inches/Second
Half Tones	4	
Brightness (Screen Voltage = 5 KV)	200	Ft-Lamberts
Contrast Ratio	10	
Resolution	90	Lines/Inch
Grid Drive	30	Volts

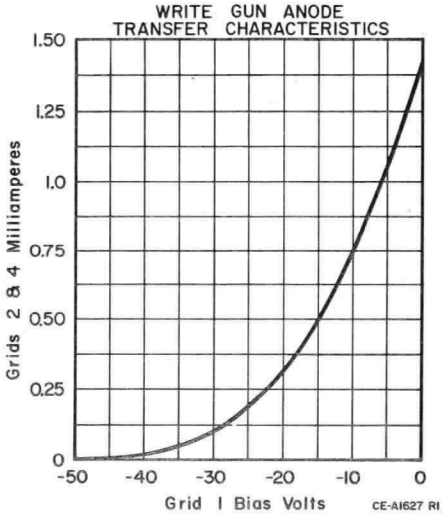

Display Storage Tube

Type: WX-5314★

Single Writing Gun
60 Second Viewing Time
4" Display Diameter
Electrostatic Focus & Deflection
90 Lines/Inch Resolution

Methods of Measuring Tube Performance

Viewing Time: Viewing duration is the time during which the visual output of a storage tube increases from exactly visual extinction to 10% of saturated brightness without the application of a writing signal or erase pulses. The tube shall be primed and then erased to exactly visual extinction. The erase pulses are removed and the screen allowed to increase in brightness. The time interval required for the brightness level at the center of the screen to increase to 10% of saturated brightness is the viewing duration.

Erasing Time: The storage surface is primed. Erasure is produced by a positive rectangular pulse applied to the backing electrode. The amplitude of this pulse is set to one volt above backing electrode cutoff and the pulse width necessary to erase from saturated brightness to 10% of saturation brightness is the erasing time.

Display Uniformity (Δep min.): The difference between the amplitude of an erase pulse required to brighten any area of an unwritten screen, and the amplitude of an erase pulse required to evenly illuminate the screen is described as the display uniformity, (Δep min.). The erase pulses used for this measurement are positive rectangular pulses adjusted from 2 to 10 volts peak-to-peak to produce complete erasure in 75 milliseconds.

Writing Speed (Cathode Current): A raster is applied having frequencies and trace length necessary to produce a scanning speed of 10,000 inches per second. The focus electrode is adjusted for best focus at the center of the raster. The tube is erased to cutoff and a single raster is written by applying a rectangular pulse of adjustable amplitude to Grid 1 of the writing gun. The last step is repeated moving the lines of the raster progressively closer together until the individual lines in the written raster cannot be discerned visually. As the lines approach the merging condition, the control grid pulse amplitude is adjusted to give a written raster of 200 Ft-L. When this brightness is achieved and the lines cannot be discerned visually, the condition of visually limited contrast ratio exists and it is under this condition that the cathode current is measured.

Contrast Ratio: A trace is written to saturation brightness while continuously writing and erasing. Using positive rectangular erase pulses variable from 2 to 10 volts peak-to-peak, the persistence (time required for a written area to be reduced to 10% of saturated brightness) is adjusted to 2 seconds. The ratio of brightnesses in the written and unwritten areas is defined as the contrast ratio. This measurement is made with a maximum ambient brightness of 10 Ft-L.

Resolution: A 60 cps sawtooth voltage is applied between deflecting electrodes $D_3 D_4$ and a 2100 to 6300 cps sawtooth voltage is applied between deflecting electrodes D_1 and D_2 giving a raster of approximately 40 lines. Blanking is used to eliminate trace return lines. Trace length shall be adjusted to 3.5 inches. Raster is expanded and number of lines determined. Focus electrode is adjusted for best focus at the center of the raster. Backing electrode is erased to cutoff and G1, writing gun, is pulsed to write a single raster. Last step is repeated moving the lines progressively closer together until the individual lines in the written raster cannot be discerned visually. As the lines approach the merging condition, the grid pulse amplitude shall be adjusted to give brightness of 100 Ft-L. When the specified brightness is achieved and the lines cannot be discerned visually, the condition for visually limited contrast ratio exists, and the resolution measured at this condition is the limiting resolution.

The resolution in lines per inch is the number of horizontal lines counted when the raster was expanded divided by the height of the compressed raster.

Grid Drive: This is the drive required for writing to 90% of saturated brightness with a writing speed of 10,000 inches per second in 1 scan. Note the writing gun drive characteristic. In the useful region, writing speed is proportional to writing current.

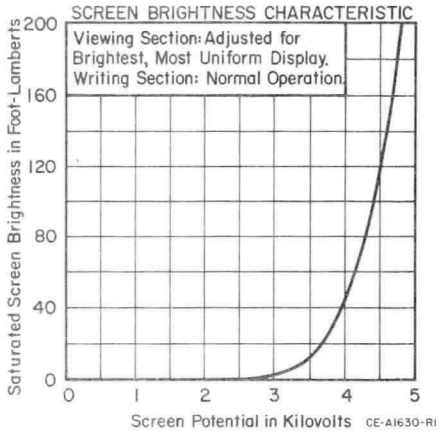

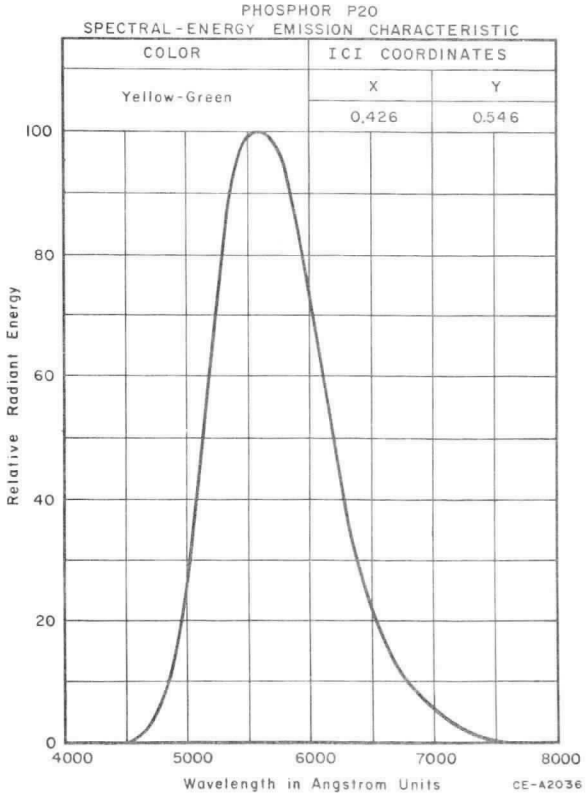

Westinghouse

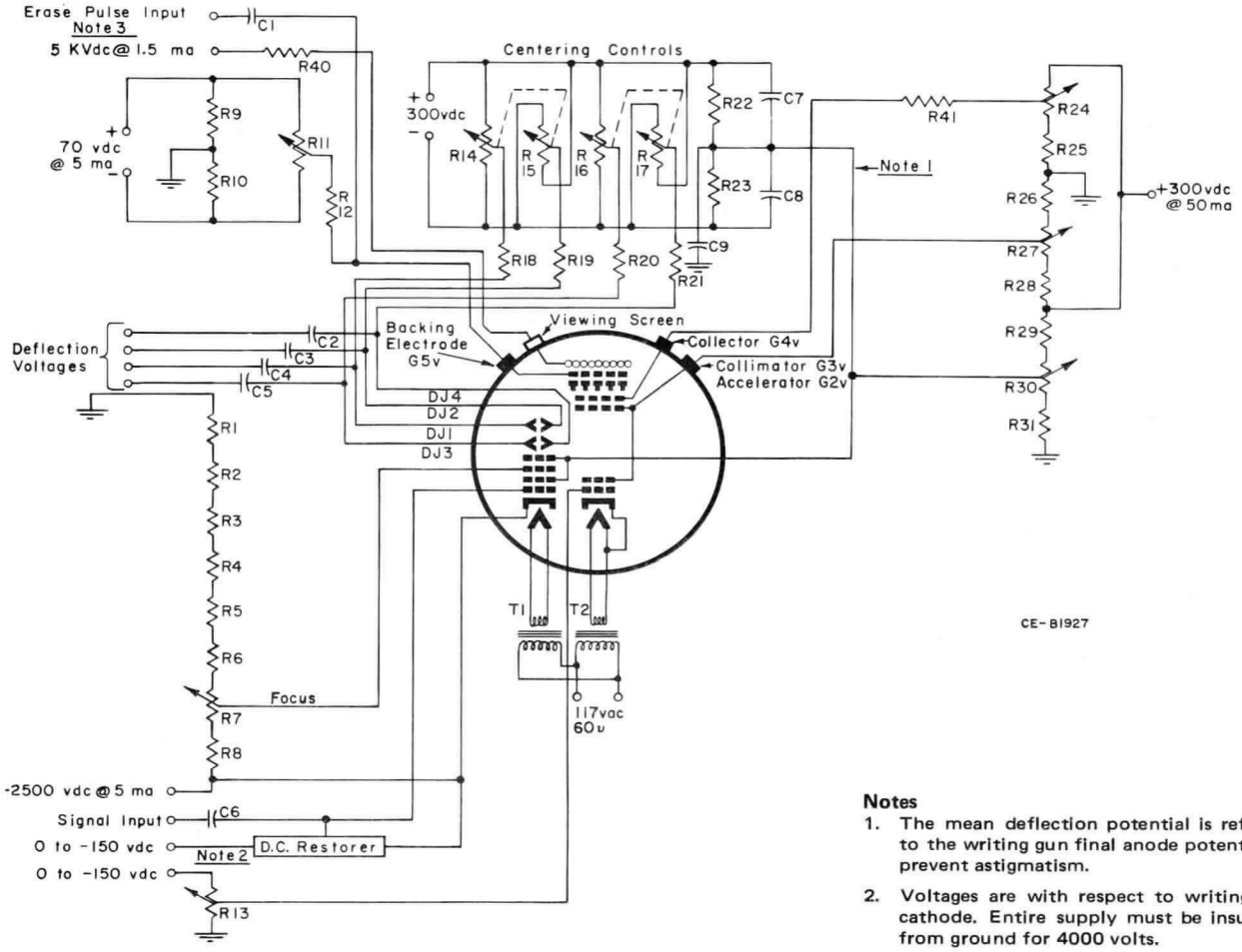

Notes

1. The mean deflection potential is referred to the writing gun final anode potential to prevent astigmatism.
2. Voltages are with respect to writing gun cathode. Entire supply must be insulated from ground for 4000 volts.
3. Erase Pulse Characteristics, Amplitude: 0 to 10 volts peak-to-peak, Width: 2 to 10 microseconds, Frequency: 0 to 1000 pulses per second.

Parts List

C1: 0.1 μf, 200 volts
C2, C3, C4, C5: Value depends on deflection-voltage frequency and waveform
C6: Value depends on signal-voltage frequency and waveform, 4000 volts
C7, C8: 0.05 μf, 600 volts
C9: 0.5 μf, 600 volts
R1: 91,000 ohms, 1 Watt
R2, R25, R29: 100 ,000 ohms, 1 watt
R3, R4, R5, R6: 470,000 ohms, 2 watts
R7: Write Gun Focus Control: 250,000-ohm potentiometer, 2 watts
R8: 180,000 ohm, 1 watt
R9, R10, R22, R23: .1 megohm, 0.5 watt
R11: Backing Electrode Control: 100,000-ohm potentiometer, 2 watts
R12: 5,000 ohm, 1 watt
R13: Flood Gun Grid 1 Control: 250,000-ohm potentiometer 2 watts
R14, R15: Write Gun D1 & D2 Centering Controls: Dual 1 megohm potentiometers, 2 watts
R16, R17: Write Gun D3 & D4 Centering Controls: Dual 1 megohm potentiometers, 2 watts
R18, R19, R20, R21: 100,000 ohm, 0.5 watt
R24: Collector Electrode Control: 200,000-ohm potentiometer, 2 watts
R26, R28, R31: 51,000 ohm 1 watt
R27: Collimating Electrode Control: 200,000-ohm potentiometer, 2 watts
R30: Accelerating Anode Control: 150,000-ohm potentiometer, 2 watts
R40: 1 megohm, 5 watts
R41: 22,000-ohm, 1 watt
T1: Filament Transformer: Primary 117 volts, Secondary 6.3 volts @ 1 ampere, Insulated for 4000 volts
T2: Filament Transformer: Primary 117 volts, Secondary 6.3 volts @ 1 ampere

Display Storage Tube

Type: WX-5314★

Single Writing Gun
60 Second Viewing Time
4" Display Diameter
Electrostatic Focus & Deflection
90 Lines/Inch Resolution

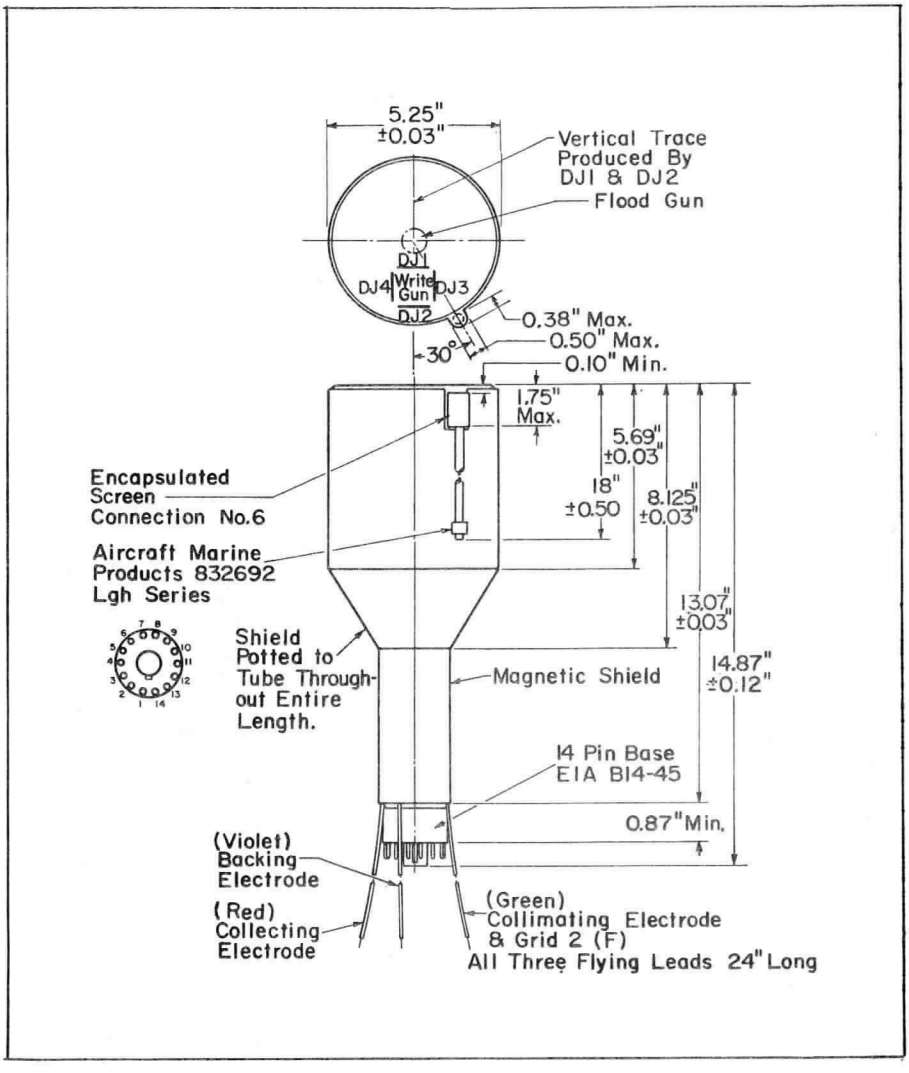

Display Storage Tube

Type: WX-5314★

Single Writing Gun
60 Second Viewing Time
4″ Display Diameter
Electrostatic Focus & Deflection
90 Lines/Inch Resolution

Westinghouse Electric Corporation
Electronic Tube Division, Elmira, N.Y. 14902
Printed in U.S.A.

ELECTROSTATIC RECORDECHON TYPE WX-5320

The WX-5320 is a small (1" dia. x 6" long) electrical-in, electrical-out storage tube for use in equipment requiring minimum size, weight and power. The WX-5320 has 450 TV lines resolution with standard TV frame rate and raster. Maximum voltage required is approximately 375 volts and a 6.3 volt, 150 ma. heater can be supplied to further reduce overall power required.

The WX-5320 can store 7 shades of gray & maintain original resolution hours before reading out. Readout erases the image and the number of readout scans is controlled by the value of reading beam current. The Recordechon can be supplied with different ranges of readout copies so that depending on specific system requirements, from 1 to over 600 readouts are possible. This tube may be operated with modified electrostatic vidicon circuitry.

The WX-5320 performs well in scan-conversion, electronic delay-line and data storage applications.

MECHANICAL

Overall Length	6-1/4"
Diameter:	
Signal Electrode Flange	1-1/8"
Bulb (Approx.)	1"
Bulb	T-8
Base	13-Pin Button Base
Socket	13-Contact Socket, Cinch #203-62-13-031 or equiv.
Operating Position	Any
Net Weight	2.6 Oz.

ELECTRICAL

Cathode	Coated Unipotential	
Heater:		
Voltage	6.3 ± 10%	Volts
Current (Note 1)	0.60	Ampere
Direct Interelectrode Capacitances:		
Grid 1 to All Other Electrodes	10	pf
Signal Electrode to All Other Electrodes	2.5	pf
Deflection Plate to All Other Electrodes	6.0	pf
Focusing Method	Electrostatic	
Deflection Method	Electrostatic	

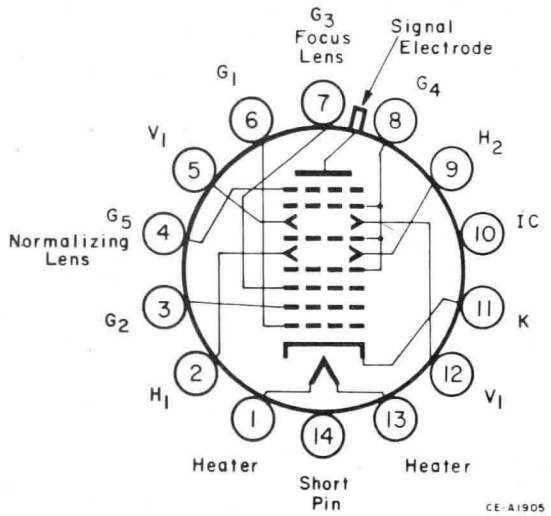

Δ The WX- number identifies a specific laboratory design; the design and, consequently, the data and type number are subject to change. No obligations are assumed to manufacture this particular device in the future unless otherwise arranged. These drawings and specifications are the property of Westinghouse Electric Corporation, Electronic Tube Division, and shall not be reproduced or copied or used as the basis for the manufacture or sale of apparatus and/or devices without permission.

MAXIMUM RATINGS

Absolute Maximum Values

Signal Electrode Voltage	500	max.	Volts
Grid 5 Voltage	1000	max.	Volts
Deflection Plates (d-c)	750	max.	Volts
Grid 4 Voltage (Note 2)	750	max.	Volts
Grid 3 Voltage (Focus)	200	max.	Volts
Grid 2 Voltage	750	max.	Volts
Grid 1 Voltage:			
Negative Bias Value	125	max.	Volts
Positive Bias Value	0	max.	Volts
Heater-Cathode Voltage:			
Heater Negative with respect to Cathode	125	max.	Volts
Heater Positive with respect to Cathode	10	max.	Volts
Faceplate Temperature	90	max.	°C

TYPICAL OPERATION

Signal Electrode Voltage	See Note 3	
Grid 5 (Normalizing Lens) Voltage	375	Volts
Deflection Plates	See Note 4	
Grid 4 Voltage (Note 2)	250	Volts
Grid 3 (Focus) Voltage	50-80	Volts
Grid 2 (Accelerator) Voltage	250	Volts
Grid 1 Cutoff Voltage	–45 to –100	Volts
Minimum Peak-to-Peak Blanking Voltage:		
Applied to Cathode	10	Volts
Applied to Grid 1	40	Volts
Readout Time	100 to 1000	Copies

MAXIMUM ELECTRODE CURRENTS FOR EQUIPMENT DESIGN (Note 4)

Grid Bias: 0 Volts

Raster Size: 3/8" × 1/2"

Signal Electrode Current	0.40	max.	μAmpere
Grid 5 Current	3.5	max.	μAmpere
Deflection Plates Current	1.5	max.	μAmpere
Grid 4 Current	2.0	max.	μAmpere
Grid 3 Current	0.030	max.	μAmpere
Grid 2 Current	1,250	max.	μAmpere
Grid 1 Current	2.0	max.	μAmpere
Cathode Current	1,500	max.	μAmpere

NOTES

1. The electrostatic recordechon can also be supplied with a 6.3 volt, 150 milliampere heater.
2. The Grid 4 consists of the Entrance Aperture, Crosstalk-Reducing Aperture and Post Accelerator.
3. The signal electrode voltage is switched between write and read conditions. The write voltage is adjusted to about 375 volts depending upon the particular application. The read voltage is normally about 10 volts.
4. The deflection plate d-c voltage should be kept the same as the Grid 4 voltage.
5. These values are intended to provide information as to the maximum currents required by each electrode, for the purpose of calculating the maximum system power requirements.

OPERATION

Circuit Requirements: Cathode blanking is used with a 10000 ohm cathode resistor. A 40 volt level is more than sufficient to cut off the beam. The complete target should be scanned in use, otherwise there is the danger of some distortion of the scanned area caused by the potentials existing on the unscanned area.

The target is adjusted to 10 volts and allowed to charge to this level. Charging can be determined visually by a sweeping action observed on the monitor.

Writing: In order to write, the target is switched to grid 5 potential (375 volts) and information to be written is applied to the electron gun's grid. If standard T.V. frames are used, and only one frame is desired to be written, the time for writing will be approximately 30 milliseconds. This corresponds to a writing speed of 20,000 inches per second across the diameter per line.

Reading: After desired storage time, the target voltage is returned to the 10 volt level. Readout of the written information takes place continuously for from 4 to 10 seconds. The beam is adjusted to be just positive of the cutoff potential to allow charging of the 10 volt target. It is only necessary, after this operation, to switch the target potential to 375 volts and apply the modulating signal to the grid, to effect a second writing cycle.

PERFORMANCE

Deflection: The deflection characteristics of the electrostatic recordechon are defined by its deflection sensitivity, deflection linearity and scanning linearity.

Deflection Sensitivity: The deflection sensitivity of the electrostatic recordechon is shown in Figure 1. The horizontal plates although slightly more sensitive than the vertical plates, require more deflection voltage because of the 4 -to- 3 aspect ratio.

Deflection Linearity: Deflection linearity is the variance in the voltage required to scan a given raster dimension at different locations on the raster. Deflection linearity is within ± 1.2%.

Scanning Linearity: Scanning linearity is the variance in the voltage required to scan an incremental distance along a given horizontal or vertical line. Scanning linearity is within ± 1.1%.

Focus Sensitivity: The focus voltage has a marked degree of control on the resolving power of the electrostatic rechordechon as shown in Figure 2.

INDEX OF TERMINALS

PIN	ELECTRODE
1:	Heater
2:	Horizontal Deflection Plate (1)
3:	Grid 2
4:	Grid 5 (Normalizing Lens)
5:	Vertical Deflection Plate (1)
6:	Grid 1
7:	Grid 3 (Focus Lens)
8:	Grid 4 (Entrance Aperture, Crosstalk-Reducing Aperture, & Post Accelerator)
9:	Horizontal Deflection Plate (2)
10:	Internal Connection DO NOT USE
11:	Cathode
12:	Vertical Deflection Plate (2)
13:	Heater
FLANGE:	Signal Electrode

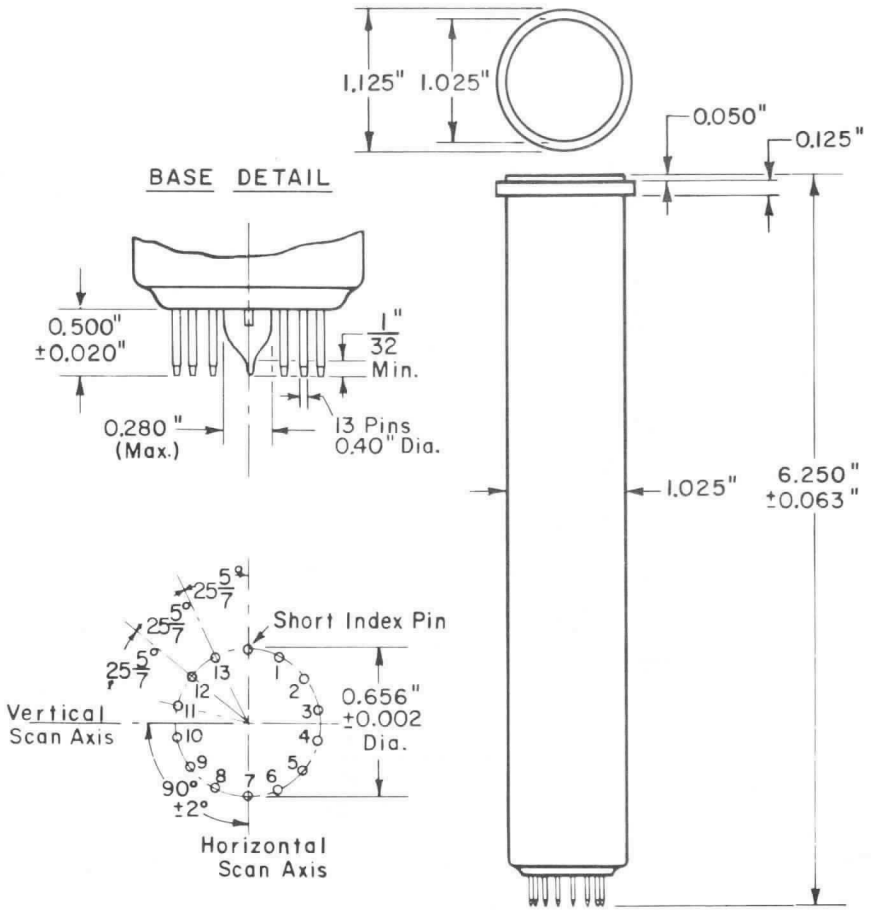

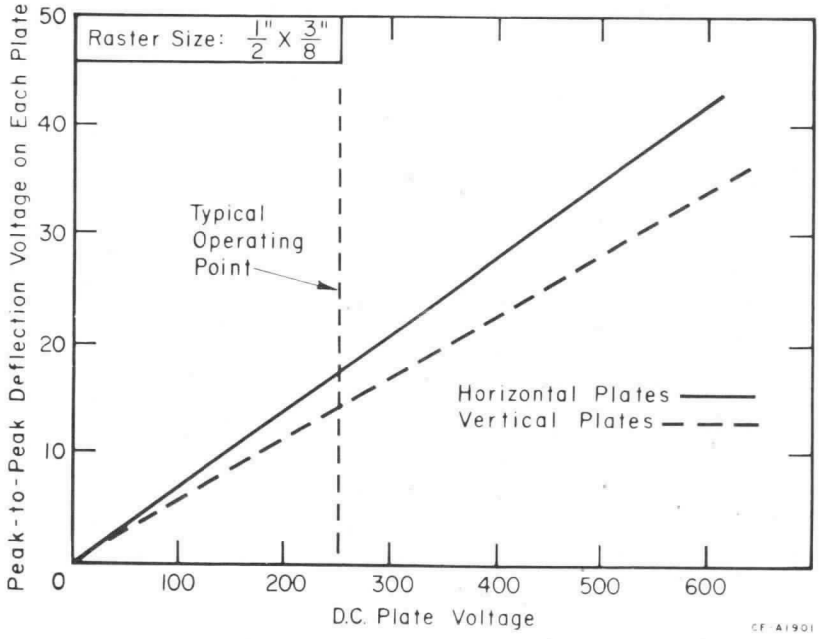

FIGURE 1: DEFLECTION PLATE SENSITIVITY

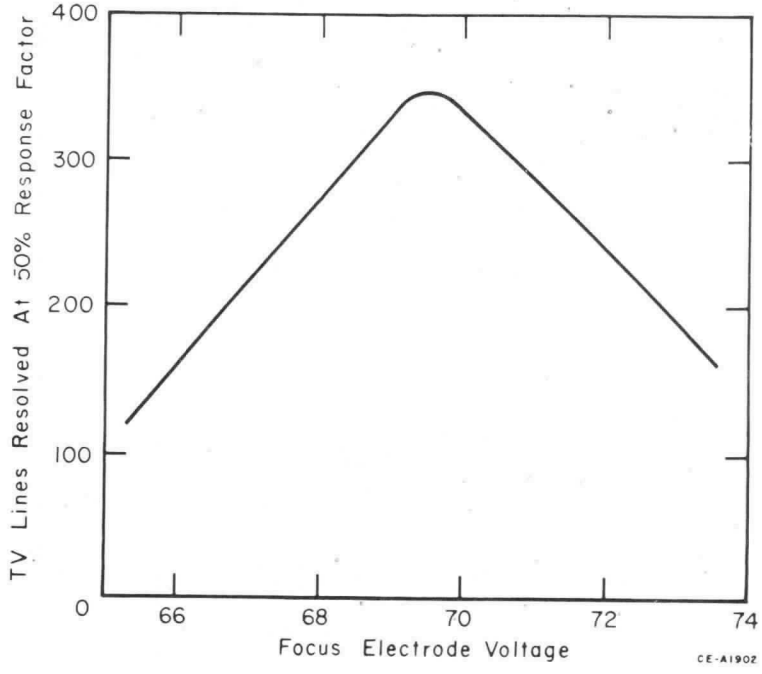

FIGURE 2: TYPICAL FOCUS ELECTRODE SENSITIVITY

SEC CAMERA TUBE TYPE WX-5419

The Westinghouse WX-5419 is a high performance camera tube that utilizes the unique new storage target based on the principle of secondary electron conduction (SEC) in a thin dielectric membrane (Note 1). As a result, excellent sensitivity and speed of response is obtained with the operational simplicity of a vidicon.

The WX-5419 consists of an S-20 photocathode, a high voltage image section, an SEC target, and a special electron gun section to permit direct-beam vidicon-like read-out. The WX-5419 is capable of providing good quality pictures with very low image lag and absence of blooming or halo over a wide range of light levels in the scene. This characteristic makes the tube of particular interest when comparison is made with standard vidicons and image orthicons. The WX-5419 is characterized by the following features:

- Average tube sensitivity is 10,000 microamperes per lumen (Note).
- Very low image lag at all light levels. Residual signal after one frame readout (1/30 sec) is less than 10%, giving excellent performance for low light level scenes containing moving objects.
- No target dark current. A feature which provides the ability to integrate still scenes and store the signal for long periods of time permitting low light level viewing (Note3). The WX-5419 is ideally suited for slow scan operation with negligible image degradation.
- Absence of blooming or halo when exposed to high light level sources in a scene while viewing at recommended light levels (see transfer characteristics).
- Suitable for photometric measurements. Good recording statistics of each photoelectron due to high target gain. Visual point source detection on a monitor can be done with approximately 200 photoelectrons (see Note 1). Reproducibility in charge readout of better than 2% for point sources of 10^4 - 10^6 photoelectrons.
- Broad spectral sensitivity provided by the response of a tri-alkali S-20 photocathode (see Note 4).

Δ The WX- number identifies a specific laboratory design; the design and, consequently, the data and type number are subject to change. No obligations are assumed to manufacture this particular device in the future unless otherwise arranged. These drawings and specifications are the property of Westinghouse Electric Corporation, Electronic Tube Division, and shall not be reproduced or copied or used as the basis for the manufacture or sale of apparatus and/or devices without permission.

Westinghouse TENTATIVE DATA

MECHANICAL

Overall Length	18.625"
Image Section:	
Diameter	3.250"
Length	5.360"
Target Diameter	1.0"
Photocathode Diameter	1.600"
Faceplate Diameter	2.250"
Gun Section:	
Diameter	2.050"
Length	13.265"
Base	Small-Shell Diheptal 14-Pin (JEDEC B14-45)
Socket	Cinch #143-42-11-016
Image Section Connections	Small Ball Cap (JEDEC J1-22)
Photocathode Connection	Annular Flange
Operating Position	Any

ELECTRICAL

Gun Cathode	Coated Unipotential
Heater:	
Voltage (Note 5)	6.3 ± 10% Volts
Current	0.60 Amperes
Photocathode (Note 4)	Flat, Semi-Transparent S-20
Focusing (Note 6)	Magnetic (70-80 Gauss)
Deflection (Note 7)	Magnetic

ABSOLUTE RATINGS

Photocathode Voltage (Negative)	10 max.	Kilovolts
Grid 11 Voltage (Note 8)	85 min, 95 max.	% of PC
Grid 10 Voltage	71 min, 80 max.	% of PC
Grid 9 Voltage	40 min, 60 max.	% of PC
Grid 8 Voltage	20 min, 30 max.	% of PC
Grid 7 Voltage	20 min, 26 max.	% of PC
Grid 6 Voltage	10 min, 20 max.	% of PC
Target Voltage	35 max.	Volts
Grid 5 Voltage	45 max.	Volts
Grid 4 Voltage	600 max.	Volts
Grid 3 Voltage	600 max.	Volts
Grid 2 Voltage	500 max.	Volts
Grid 1 Voltage:		
Negative Bias Value	150 max.	Volts
Positive Bias Value	0 max.	Volts
Heater-Cathode Voltage:		
Heater negative with respect to Cathode	125 max.	Volts
Heater positive with respect to Cathode	10 max.	Volts
Cathode Blanking Voltage	125 max.	Volts
Peak Target Current (Note 9)	6×10^{-7} max.	Amperes
Faceplate Temperature (Storage)	55 max.	°C

TYPICAL OPERATING CONDITIONS (Note 10)

Illumination	See Transfer Characteristcs	
Photocathode Voltage	6	Kilovolts
Grid 11 Voltage	93	% of PC
Grid 10 Voltage	75	% of PC
Grid 9 Voltage	46	% of PC
Grid 8 Voltage	25	% of PC
Grid 7 Voltage	23	% of PC
Grid 6 Voltage	18	% of PC
Target Voltage	10 to 35	Volts
Grid 5 Voltage	15 to 45	Volts
Grid 4 Voltage	400	Volts
Grid 3 Voltage	300	Volts
Grid 2 Voltage	250	Volts
Grid 1 Voltage (Note 11)	0 to -100	
Cathode Voltage:		
Without Blanking	0	Volts
With Blanking	40 p-p	Volts
Faceplate Temperature (Note 12)	45	°C
Peak High-light Signal Current	5×10^{-7}	Amperes
Focus Field Strength	75	Gauss

NOTES

1. "Secondary Electron Conduction (SEC) for Signal Amplification and Storage in Camera Tubes", G. W. Goetze and A. H. Boerio. "Proceedings of the IEEE", Vol. 52, No. 9, September 1964, pp. 1007-1012.

2. Light level readings made using a standard tungsten filament lamp at a color temperature of 2870°K attenuated by Inconel neutral density filters.

3. Tube can provide good quality pictures after a 3 second integration period and at approximately 1/100 the light level at 30 frames/second continuous imaging. Special consideration can be made if integration periods of more than 3 seconds are required.

4. The WX-5419 may be supplied with various photocathodes and faceplates to accommodate diverse spectral requirements and applications.

5. The WX-5419 may be supplied on request with a low power consumption gun cathode assembly.

6. A special focus coil is required for the WX-5419. Details are available on request.

7. The deflection coil assembly used for the WX-5419 is the same as that used for a standard image orthicon (Cleveland OY-1-2PS or equivalent).

8. The potential of the image section of the WX-5419 (Photocathode through G6) should be supplied from a common high voltage supply to preclude a potential difference between grids exceeding percentages shown.

9. The design of the amplifier for the WX-5419 should consider a peak target current of 26 x 10^{-7} amperes to eliminate distortion or overload possibilities.

10. Specific operational voltages will be supplied with each tube.

11. Grid 1 voltage is adjusted to effect complete target discharge.

12. If the tube is operated with higher faceplate temperature, irrevocable damage may be done to the photocathode.

TRANSFER CHARACTERISTICS

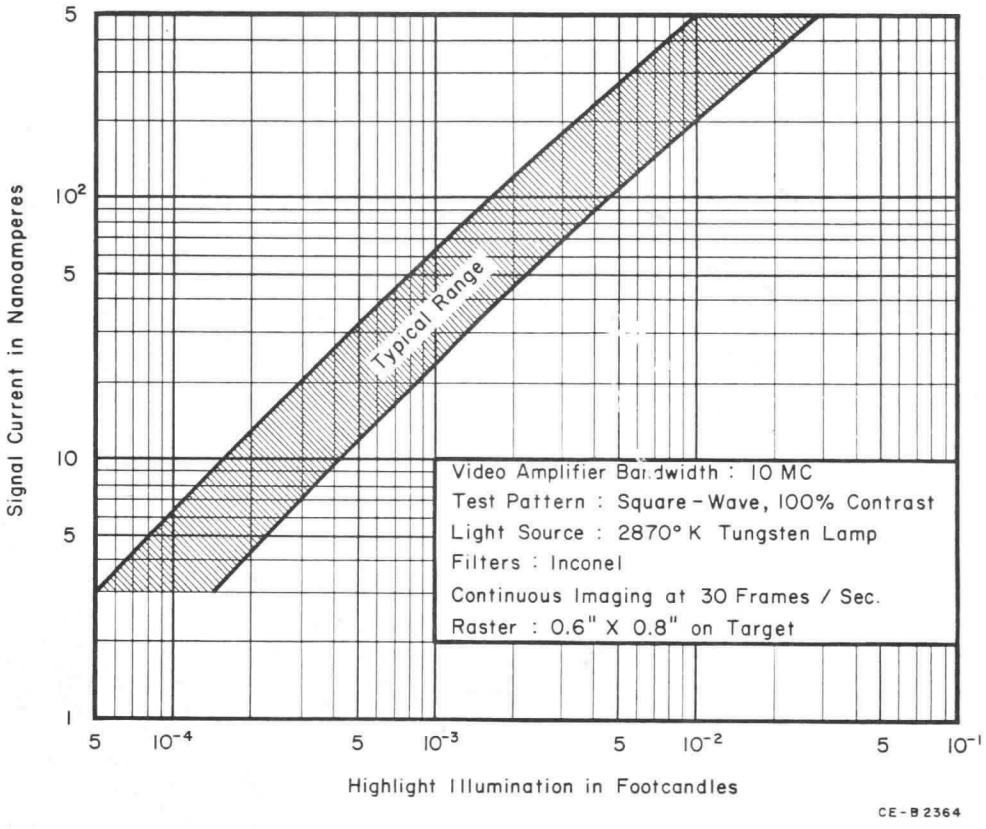

TERMINAL IDENTIFICATION

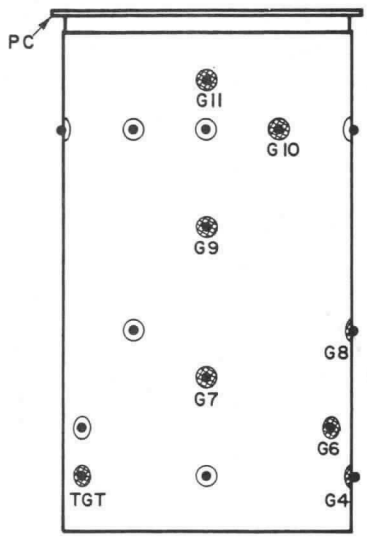

Image Section Bulb
(JEDEC JI-22 Terminals)

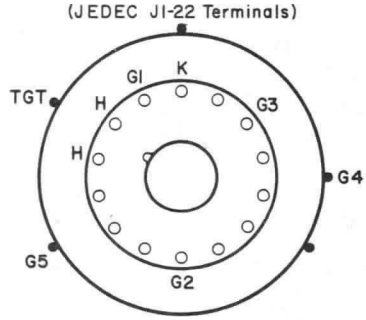

Bottom View
(One Row of Bulb Contacts Shown)

TYPICAL RESOLUTION SENSITIVITY RANGE

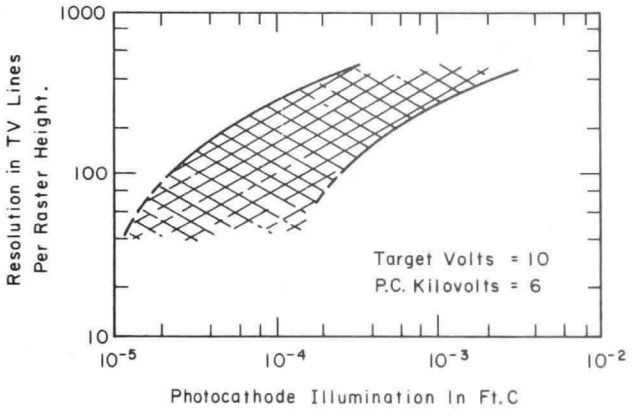

CE-A2362

EFFECT OF CONTRAST RATIO ON RESOLUTION SENSITIVITY

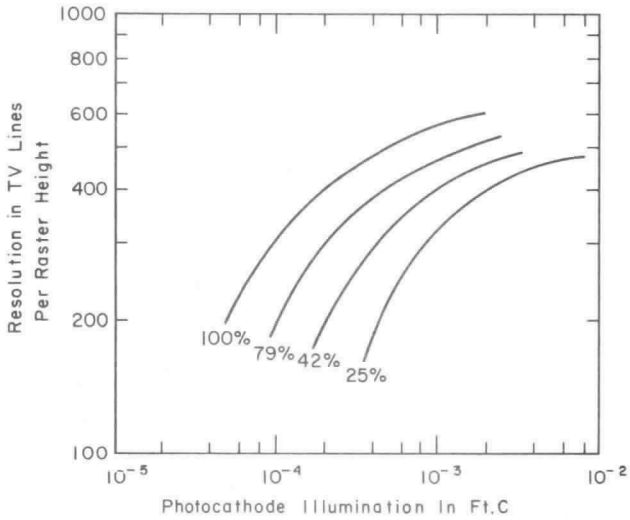

CE-A2363

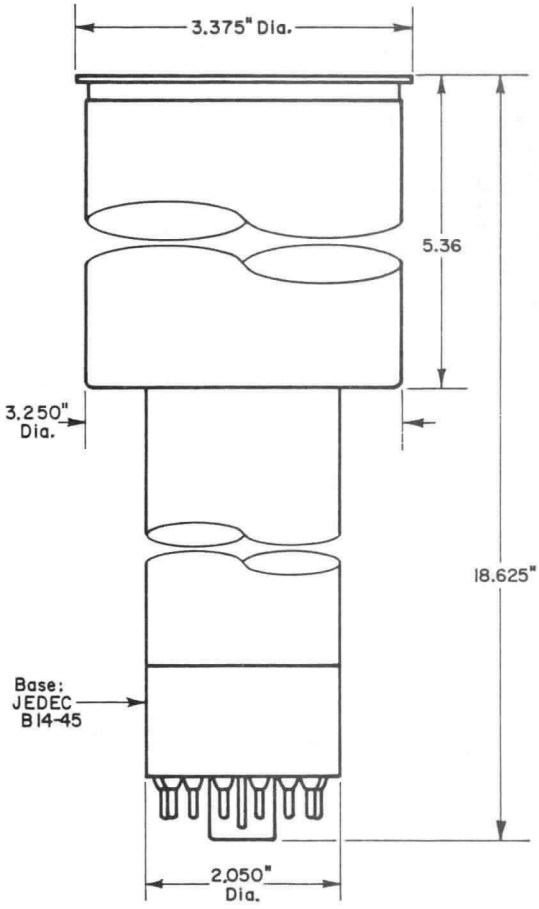

TYPICAL SQUARE-WAVE APERTURE RESPONSE

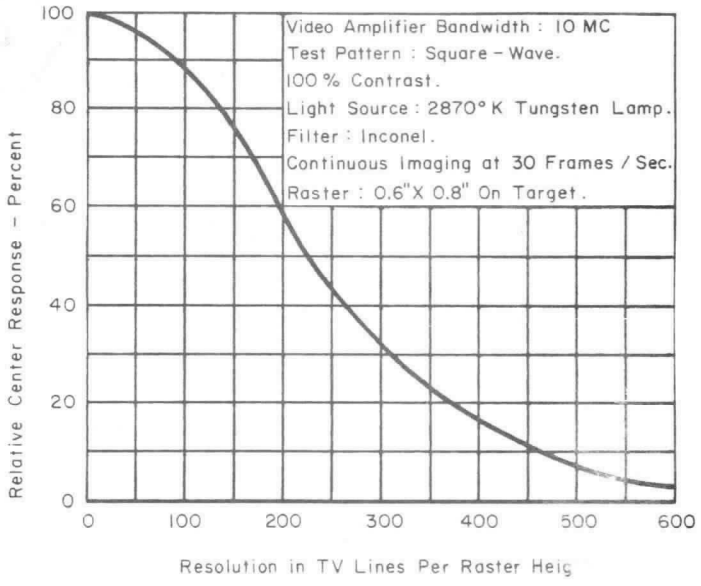

CE-A2361



The information contained herein is supplied without assuming responsibility for infringement of patents or other rights of third parties which may result from its use. No license is granted by implication or otherwise under any patent or patent rights of Westinghouse Electric Corporation.

WESTINGHOUSE ELECTRIC CORPORATION, ELECTRONIC TUBE DIVISION, ELMIRA, NEW YORK

Westinghouse Magnetic SEC Camera Tubes utilize storage targets which employ the principle of secondary electron conduction (SEC) in a thin dielectric membrane (NOTE 1). Excellent sensitivity and speed of response is obtained with the operational simplicity of a Vidicon.

These tubes are normally supplied with S-20 photocathodes which have a broad spectral response extending from the ultraviolet to the near infra-red. By the use of fused quartz or crystalline faceplate materials WX-5419B can be made with good sensitivity in the ultraviolet.

Commercially available yokes may be used to generate magnetic deflection fields required to scan the read beam over the storage target. An axial magnetic focus field extending over both image and read sections is provided by means of an external solenoidal coil.

It is recommended that the focusing coil consist of a number of segments connected in series. Mu-metal washers of ID equal to that of the coil can then be placed between the segments in front of the deflection yoke to help suppress cross talk. A further Mu-metal washer of OD equal to the ID of the coil should if possible be placed directly in front of the deflection yoke to eliminate cross talk.

These SEC Camera Tubes are characterized by good sensitivity, low lag, good storage and negligible halation or blooming. These properties assure tubes of great versatility.

Westinghouse TENTATIVE DATA

MAGNETIC SEC CAMERA TUBES

MECHANICAL

Length Max.	17.5"
Length Image Max.	5.7"
Diameter Image Max.	3.3"
Diameter Gun Max.	2.1"
Diameter Faceplate	2.0"
Diameter Photocathode	1.6"
Diameter Target	1.4"
Operating Position	Any
Base	B14-45
Socket	Cinch # 143-32-11-016 or equivalent

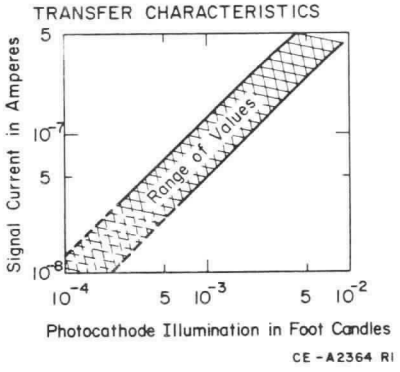

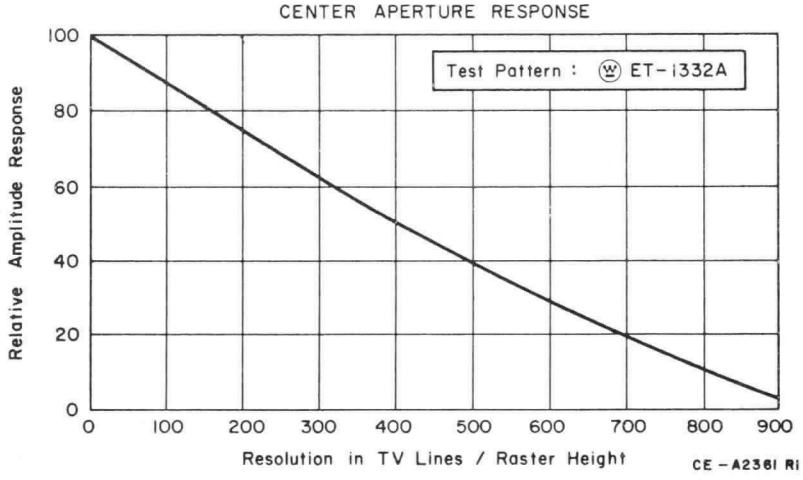

ELECTRICAL

Gun Cathode	Coated Unipotential
Heater Volts	6.3 ± 10%
Heater Current Amps (NOTE 2)	0.15 or 0.65
Photocathode	S-20 (Semi-transparent)
Focusing (Special Coil Required)	Approximately 80 Gauss
Deflection and Alignment	Cleveland OY-1-2PS or Equivalent
Maximum Ratings	
Photocathode	-10 KV
Illumination	10^{-2} foot-candles
Target	50 volts
Suppressor Grid 5	40 volts
Field Mesh Grid 4	700 volts
Grid 3	600 volts
Grid 2	400 volts
Grid 1	-150 volts
Cathode	
Heater Negative	125 volts
Heater Positive	10 volts
Alignment Currents	100 mA
Blanking Peak-To-Peak	± 150 volts
Signal Current	0.4 μA
Target Shunt Capacitance	50 pF
Faceplate Temperature (NOTE 3)	55° C

TYPICAL OPERATING

Image Section	
Photocathode	6 to 8 KV (negative)
E_1 % of PC	87
E_2 % of PC	75
E_3 % of PC	62
E_4 % of PC	50
E_5 % of PC	37
E_6 % of PC	25
E_7 % of PC	12
E_8 % of PC	0
Gun Section	
Cathode Volts	0
G1 Volts	-55 ± 45
G2 Volts	270 to 330
G3 Volts	200 to 600
G4 Volts	200 to 700
G5 volts	15
Target Volts	20
Focus Field	80 Gauss
Faceplate Temperature	35° C

NOTE 1 - "Secondary Electron Conduction (SEC) for Signal Amplification and Storage in Camera Tubes", G. W. Goetze and A. H. Boerio. Proceedings of the IEEE, Vol. 52, No. 9, September 1964, pp 1007-1012.

NOTE 2 - Normally supplied with 4 watt heater cathodes. One watt heaters available on special order.

NOTE 3 - Storage for extended periods at high temperatures may result in damage to the photosurface.

PERFORMANCE DATA

Sensitivity at 10^{-3} foot-candles faceplate Illumination	See page 9
Minimum value	50μA / foot-candles
Highlight Signal Current	
Minimum Value	0.4 μA
Limiting Resolution	
At center of picture	
Typical value	900 TV lines
Minimum value	800 TV lines
At corner of picture	
Typical value	700 TV lines
Minimum value	600 TV lines
Amplitude Response to a square-wave	See page 8
Test pattern at center of picture	
400 TV lines	
Minimum value	45%
600 TV lines	
Minimum value	20%
Signal Uniformity, measured as the deviation from the maximum signal level across a horizontal center line	
Maximum value	40%
Typical value	20%
Residual Signal	
1/30 sec. after illumination is removed with a highlight signal current of 200 na	
Maximum value	10%
Geometric Distortion Maximum	4%
Typical	2%

Westinghouse TENTATIVE DATA

MAGNETIC SEC CAMERA TUBES

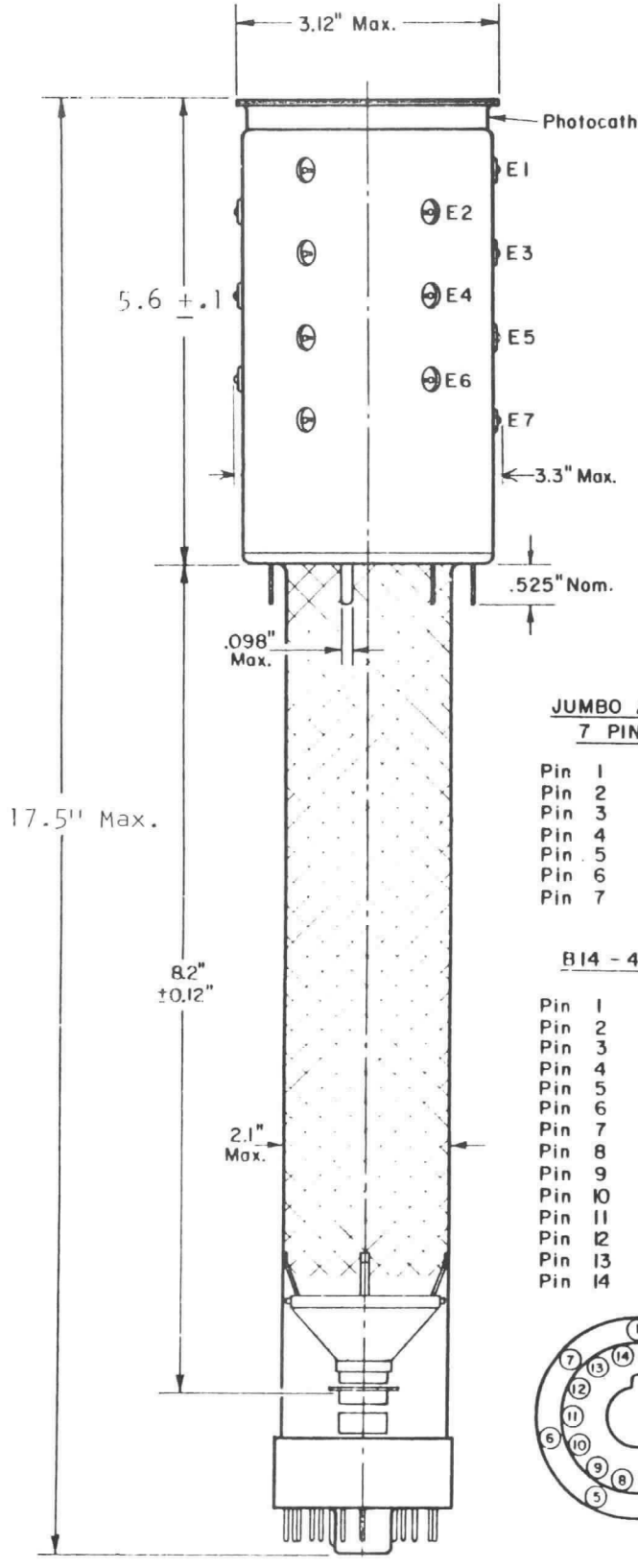

JUMBO ANNULAR
7 PIN BASE

Pin	1	Target
Pin	2	Field Mesh
Pin	3	Anode
Pin	4	Internal
Pin	5	Suppressor Mesh
Pin	6	Open
Pin	7	Internal

B14 - 45 BASE

Pin	1	Heater
Pin	2	G1
Pin	3	Cathode
Pin	4	G1
Pin	5	G3
Pin	6	G1
Pin	7	Open
Pin	8	Open
Pin	9	G1
Pin	10	G2
Pin	11	G1
Pin	12	Open
Pin	13	G1
Pin	14	Heater

OPERATING INSTRUCTIONS

IMPORTANT: The sudden application of a large voltage between the thin film target and the close-spaced G-5 mesh can cause the two to contact, resulting in permanent damage. Thus it is especially important that the operator refrain from touching either the target or G-5 contact in order to avoid the possibility of applying a large electrostatic potential to either electrode. An external short should be applied to these electrodes when the tube is not in use and extreme care should be taken in removing the short and inserting the tube in the camera head.

After the tube is inserted into the camera and all electrode connections have been made, apply potentials in sequence as follows:

1. Magnetic focusing field .....80 Gauss
2. Magnetic deflection .....target overscanned
3. E_{G1}.....90 V (negative)
4. E_{G2}.....275 V
5. E_{G5}.....10 V
6. E_{target}.....5 V
7. E_f .....6.3 V (NOTE 1)
8. E_{G4} .....550 V
9. E_{G3} .....650 V
10. Decrease E_{G1} slowly until overscanned target appears on monitor (approximately -30 V).
11. Raise photocathode potential slowly to 7 KV (negative).
12. Illuminate photocathode with test chart. (NOTE 2).
13. Increase E_{G5} to 15 V.
14. Increase E_{target} to 15-30 V.
15. Center image and normalize scan size.
16. Adjust optical focus; focus image section by varying photocathode potential; focus scanning section by varying E_{G3}. Adjust alignment by reducing E_{G5} to 0-2V and align the center of the scanned area with the center of the target.
17. FACEPLATE ILLUMINATION SHOULD NOT EXCEED 10^{-2} FOOT CANDLES FOR EXTENDED PERIODS.

NOTE 1: The filament current should at no time exceed 0.17A on the 1 watt cathode or 0.7A on the 4 watt cathode.

NOTE 2: The image at the photocathode shall be 1.12" x .84".

April 18, 1958

VIDICON TYPE WL-6326A

The WL-6326A is a small size television camera tube designed primarily for use in film and live pickup applications. It has a resolution capability of approximately 600 television lines, and a sensitivity such that it requires illumination levels comparable to those required for motion picture film cameras. The spectral response of the WL-6326A is similar to that of the human eye.

ELECTRICAL:

Cathode	Coated Unipotential
Heater:	
Voltage (ac or dc)	6.3 ± 10% Volts
Current	0.6 Ampere
Direct Interelectrode Capacitance:	
Signal Electrode to all other Electrodes	4.5 uuf
Spectral Response	See Curve
Photoconductive Layer:	
Max. Useful Diagonal of Rectangular Image (4 x 3)Aspect Ratio)	0.62 Inch
Orientation of Quality Rectangle	Proper orientation

is obtained when the horizontal scan is essentially parallel to the plane passing through the tube axis and short index pin.

Focusing Method	Magnetic
Deflection Method	Magnetic

MECHANICAL:

Overall Length	6-1/4" ± 1/4"
Greatest Diameter	1.125" ± 0.010"
Bulb	T-8
Base	Small-Button Ditetrar 8-Pin (JETEC E8-11)
Operating Position	Any

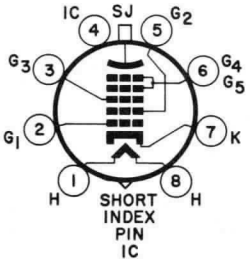

PIN 1: HEATER
PIN 2: GRID 1
PIN 3: GRID 3
PIN 4: INTERNAL CONNECTION (DO NOT USE)
PIN 5: GRID 2
PIN 6: GRIDS 4 & 5
PIN 7: CATHODE
PIN 8: HEATER
SJ: SIGNAL ELECTRODE

MAXIMUM RATINGS:

Absolute Maximum System			
Signal-Electrode Voltage	100	max.	Volts
Grid No. 4 & Grid 3 & Grid 5 Voltage	350	max.	Volts
Grid No. 2 Voltage	350	max.	Volts
Grid No. 1 Voltage:			
Negative Bias Value	125	max.	Volts
Positive Bias Value	0	max.	Volts
Heater-Cathode Voltage:			
Heater Negative with Respect to Cathode	125	max.	Volts
Heater Positive with Respect to Cathode	10	max.	Volts
Faceplate Temperature	70	max.	°C
Faceplate Illumination	1000	max.	ft-c

TYPICAL OPERATION AND CHARACTERISTICS:

For Scanned Area of 1/2" x 3/8"		
Faceplate Highlight Illumination	100 to 300	ft-c
Signal-Electrode Voltage	10 to 70	Volts
Grid No. 4 (Decelerator) & Grid No. 3 & Grid 5 (Beam Focus) Voltage	250	Volts
Grid No. 2 (Accelerator) Voltage	300	Volts
Grid No. 1 Voltage:		
(For Picture Cutoff▲)	-45 to -100	Volts
Signal-Output Current:*		
Normal Operating Range	0.1 to 0.2	uamp
Min., with 0.6 foot-candle of uniform 2870°K tungsten illumination on tube face	0.045	uamp
Maximum Dark Current	0.02	uamp
Uniform 2870°(Tungsten Illumination on Tube Face to Produce:		
Signal-Output Current of 0.1 to 0.2 uamp	3 to 10	ft-c
Average "Gamma" of Transfer Characteristic for Signal Output Current Between 0.02 and 0.2 uamp	0.65	
Minimum Peak-to-Peak Blanking Voltage:		
When Applied to Grid No. 1	40	Volts
When Applied to Cathode	10	Volts
Field Strength at Center of Focusing Device	40	Gausses
Field Strength of Adjustable Alignment Coil	0 to 4	Gausses

▲ With no blanking voltage on Grid No. 1

* Defined as the component of the signal-electrode current after the dark current component has been subtracted.

TYPICAL SIGNAL OUTPUT

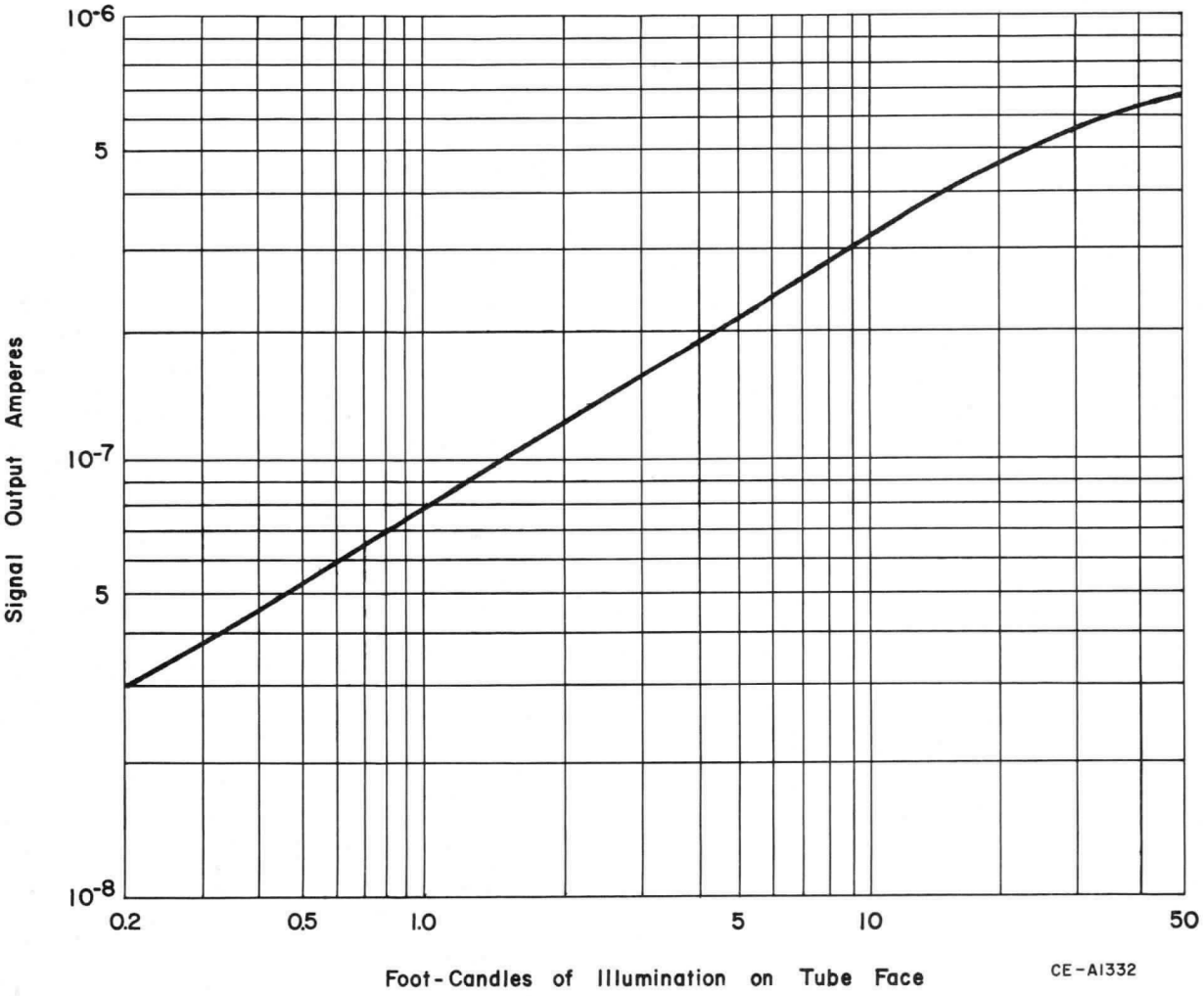

SPECTRAL SENSITIVITY CHARACTERISTICS

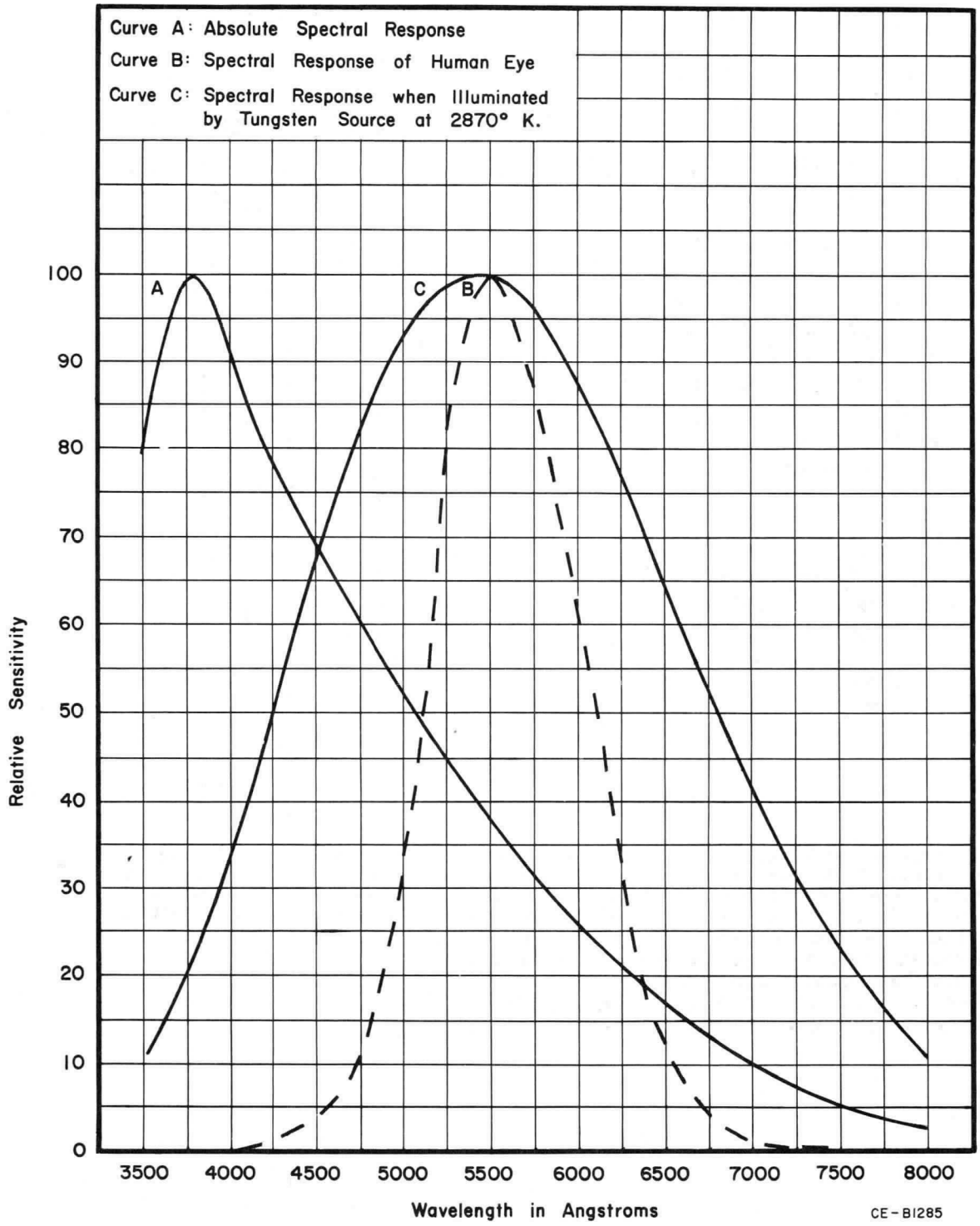

8 PIN BASE
JETEC Nº E8-11

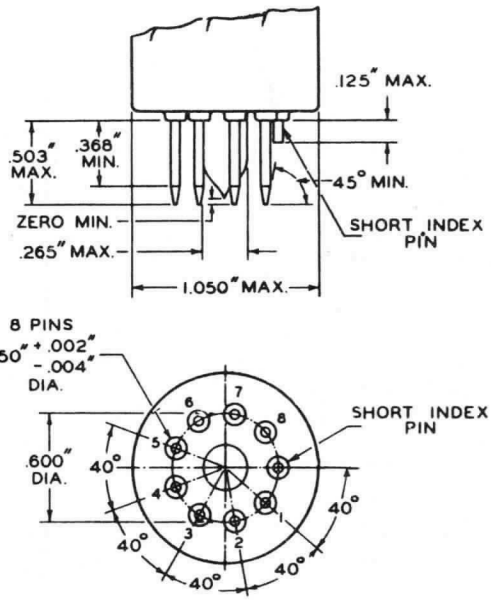

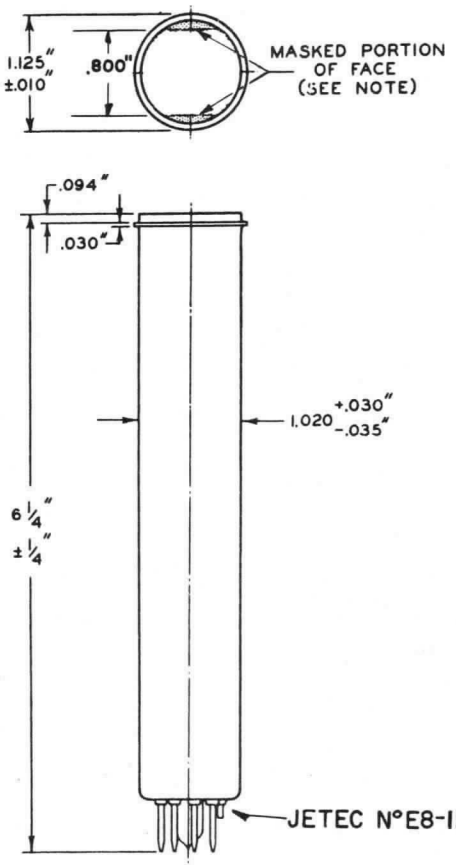

BASE-PIN POSITIONS ARE HELD TO TOLERANCES SUCH THAT PINS WILL FIT A FLAT PLATE GAUGE HAVING THICKNESS OF 1/4" AND 9 HOLES 0.0700" ± 0.0005" SO LOCATED ON A 0.6000" ± 0.0005" DIA. CIRCLE THAT THE DISTANCE ALONG THE CHORD BETWEEN ANY TWO ADJACENT HOLE CENTERS IS 0.2052" ± 0.0005", GAUGE IS PROVIDED WITH CENTER HOLE HAVING DIAMETER OF 0.300" ±0.001" AND SAME CENTER AS THE PIN CIRCLE.

STRAIGHT SIDES OF MASKED PORTIONS ARE PARALLEL TO PLANE PASSING THROUGH TUBE AXIS AND SHORT INDEX PIN

CE-A1350

LIGHT IMAGE INTENSIFIER TYPE 7257

The 7257 is a high vacuum tube designed to intensify light radiation by electronic means. This tube produces an image of reduced size having a brightness increase of 200 times for input color temperature of 2870°K, and 2500 times for blue input (4200 Angstroms). Incoming radiation impinges on an input photosurface five inches in diameter, converting the light image to an electron image. The photocathode is deposited directly on the inner side of the polished bulb face and is capable of becoming an integral part of an external optical system. The electron image is focused and accelerated toward an aluminum backed P11 phosphor screen with a useful output diameter of one inch.

ELECTRICAL

Gain with 30KV on Anode Screen: (Note 1)	
Approximate Image Minification Gain	25
Peak Quantum Gain:	
Blue (4200 Angstroms) Input	100
Brightness Gain: (Note 2)	
2870° K Tungsten Input	200
Blue (4200 Angstroms) Input	2500
Optical Minification Ratio	5:1
Input Resolution (Note 3)	75 Line Pairs/Inch
Photocathode Spectral Response	See Fig. 1
Output Phosphor Spectral Response	See Fig. 2
Output Phosphor Persistence	See Fig. 3

MECHANICAL

Maximum Diameter	8-11/16"
Maximum Length	15-3/4"
Maximum Usable Photocathode Diameter	5"
Radius of Curvature of Input Screen (Note 4)	10-1/4"
Maximum Usable Output Screen Diameter	1"
Net Weight (Approx.)	6-1/8 Pounds
Shipping Weight (Approx.)	21 Pounds
Operating Position	Any

MAXIMUM RATINGS

Absolute Maximum Values

Anode Screen to Photocathode Voltage	30 max.	Kilovolts
Peak Pulse Anode Screen Current	1 max.	Milliampere

TYPICAL OPERATING CONDITIONS

Photocathode and First Lens Element	Grounded
Anode Screen Voltage	20 to 30 Kilovolts
Fifth Lens Element	13.9% to 16.4% of Anode Voltage
Fourth Lens Element	40% of Fifth Lens Element Voltage
Third Lens Element	8% of Fifth Lens Element Voltage
Second Lens Element	3% of Fifth Lens Element Voltage
Approximate Anode Screen Current with 10^{-3} foot Candle Input to Tube	1 to 2 Microamperes

NOTES

1. With a fixed light-intensity input, the light-intensity output has an approximately linear variation with screen voltage from 20 to 30 kilovolts.
2. Input and output viewed with standard eye response. Value includes image minification gain.
3. The resolution measurements are made over the central area of the photocathode.
4. Thickness tolerance of faceplate is ± 0.025" over entire surface.

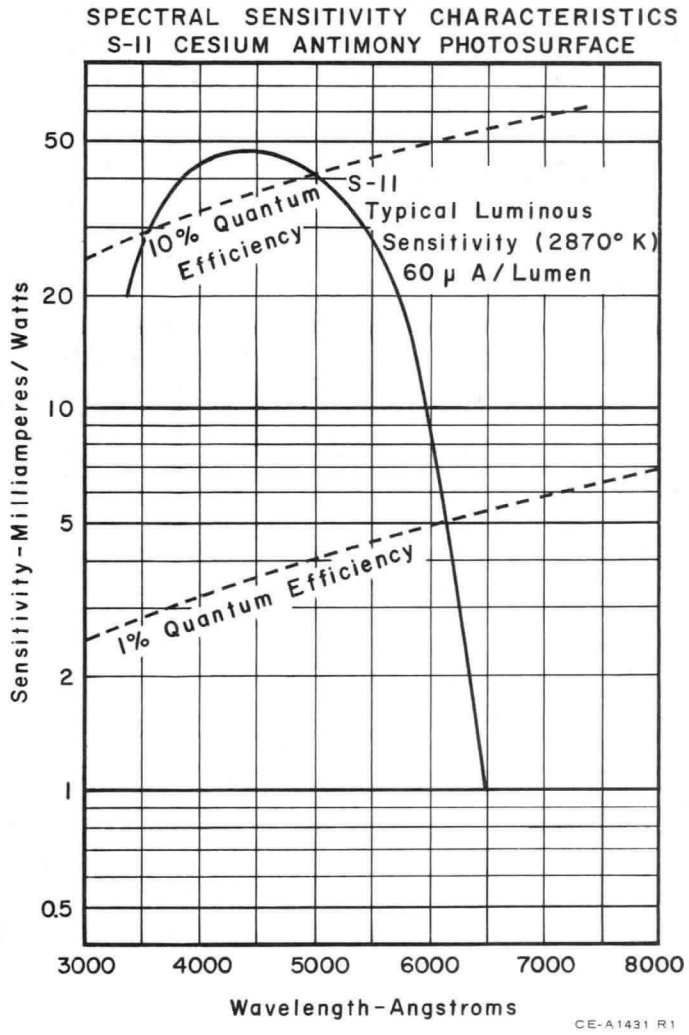
SPECTRAL SENSITIVITY CHARACTERISTICS
S-11 CESIUM ANTIMONY PHOTOSURFACE
Sensitivity-Milliamperes/Watts
50
20
10
5
2
1
0.5
10% Quantum Efficiency
S-11
Typical Luminous
Sensitivity (2870° K)
60 μ A/Lumen
1% Quantum Efficiency
3000
4000
5000
6000
7000
8000
Wavelength-Angstroms
CE-A1431 R1

FIGURE 1

P11 PHOSPHOR
SPECTRAL ENERGY EMISSION CHARACTERISTIC

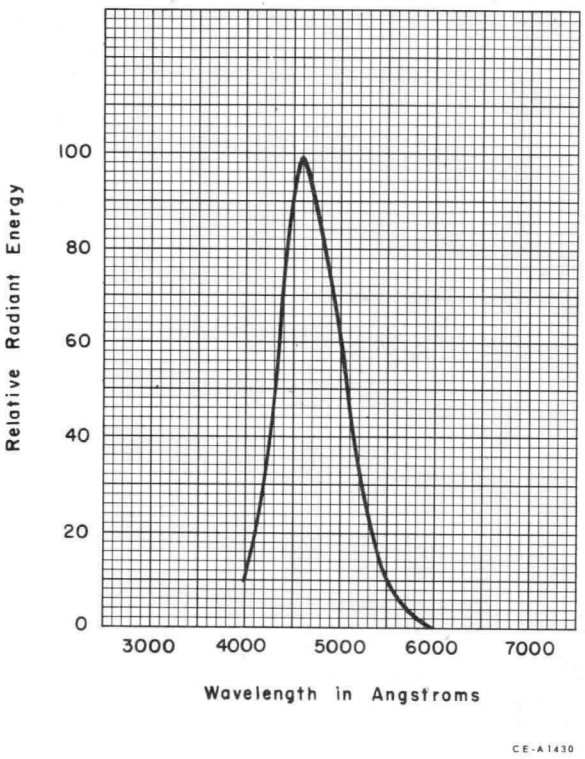

FIGURE 2

P11 PHOSPHOR PERSISTENCE CHARACTERISTIC

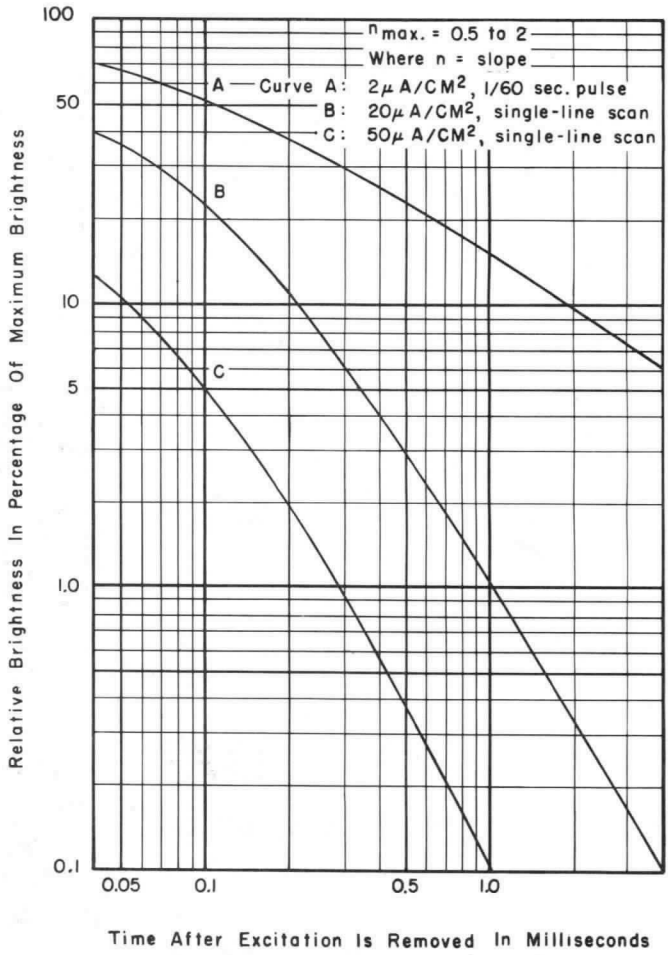

FIGURE 3

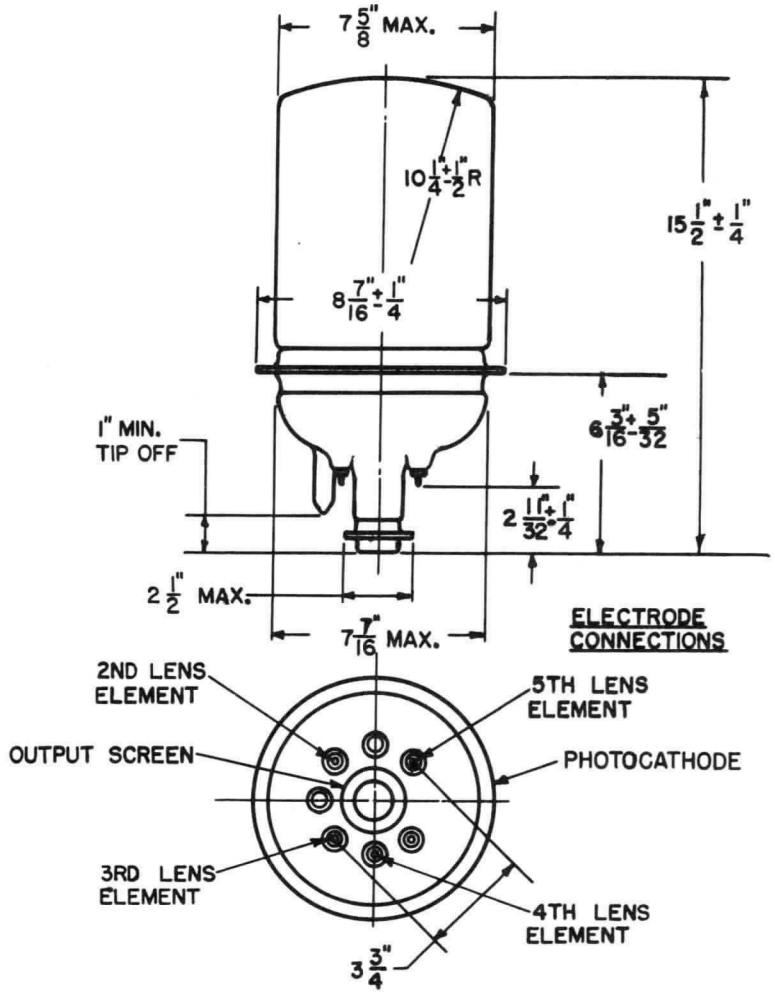

The information contained herein is supplied without assuming responsibility for infringement of patents or other rights of third parties which may result from its use. No license is granted by implication or otherwise under any patent or patent rights of Westinghouse Electric Corporation.

September 1, 1960

DIRECT VIEW STORAGE TUBE TYPE 7268

Two Writing Guns
Viewing Gun
Integral Tube and Shield Assembly

4" Display Diameter

5-1/4" Overall Diameter Including Shield
15-3/4" Overall Length
25 Pin Two-Tier Base

The 7268 is a direct-view storage tube incorporating two writing guns and a viewing gun system capable of producing a bright, non-flickering, uniform display over a four inch diameter viewing area. The two electrostatically focused and deflected writing guns permit independent and simultaneous writing of two signals.

Performance characteristics of the tube include a brightness of up to 2500 foot-lamberts with 10,000 volts applied to the phosphor, good resolution of half-tone displays, and excellent display uniformity. The writing speed of 36,000 inches per second is sufficient to "freeze" high frequency transients, and storage time is long enough to allow adequate examination and recording of the display.

The 7268 is particularly useful for such applications as airborne fire control radar, weather radar, transient studies, data transmission including half-tone storage, telemetering, facsimile, and visual displays requiring steady, narrow-bandwidth transmission over telephone lines.

The 7268 is designed to operate under military environmental conditions. It may be operated unpressurized at high altitudes. The pin connections have been grouped according to operating potentials within a Westinghouse designed Two-Tier 25 Pin Base (JEDEC B25-216) which features unusually long external leakage paths between pin circles. In addition, the base is potted to eliminate internal leakage.

The entire tube is potted within its magnetic shield with a synthetic silicone-rubber material providing protection against mechanical shock, vibration, humidity, and leakage between bulb terminals. The magnetic shield is resistant to salt spray.

The integral tube-and-shield assembly together with the improved base design greatly simplify tube installation procedure.

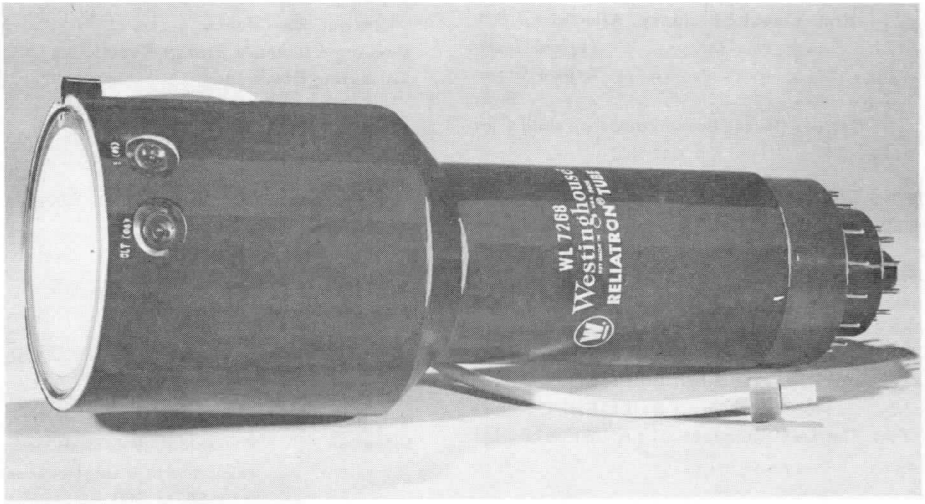

ELECTRICAL:

Storage:

Type	Half-Tone or Line
Mode	Control of Transmission
Type of Erasure	Overall

Writing Guns: (Each Gun)

Cathode			Coated Unipotential	
Heater:	Min.	Bogey	Max.	
Voltage (ac or dc)	5.67	6.3	6.93	Volts
Current	0.50	0.60	0.70	Amperes
Focusing Method				Electrostatic
Deflection Method				Electrostatic
Number of Writing Guns				Two

Viewing Gun:

Cathode			Coated Unipotential	
Heater:	Min.	Bogey	Max.	
Voltage	5.67	6.3	6.93	Volts
Current	0.50	0.60	0.70	Ampere
Warm-up Time before Applying High Voltages	30	--	--	Seconds
Focus and Deflection	Undeflected, Collimated "Flood" Gun			

Direct Interelectrode Capacitances:

External Integral Shield Grounded

Writing Gun Cathode to All Internal Elements	7 max.	μμf
Viewing Gun Cathode to All Internal Elements	10 max.	μμf
Writing Gun Grid 1 to All Internal Elements	10 max.	μμf
Viewing Gun Grid 1 to All Internal Elements	18 max.	μμf
Deflection Electrode 1 to Deflection Electrode 2	3 max.	μμf
Deflection Electrode 3 to Deflection Electrode 4	2 max.	μμf
Deflection Electrode 1 to All Internal Elements	8 max.	μμf
Deflection Electrode 2 to All Internal Elements	8 max.	μμf
Deflection Electrode 3 to All Internal Elements	8 max.	μμf
Deflection Electrode 4 to All Internal Elements	8 max.	μμf
Backing Electrode to All Internal Elements	110 max.	μμf

OPTICAL:

Phosphor:	
Type	High Visual Efficiency, Aluminized P20
Fluorescence	Yellow-Green
Phosphorescence	Yellow-Green
Persistence	Short
Faceplate	Optical Glass, Ground and Polished Flat

MECHANICAL:

Minimum Useful Viewing Diameter	4"
Maximum Overall Length	16"
Maximum Seated Length	14-1/4"
Greatest Shield Diameter	5-1/4" ± 1/16"
Viewing Screen Terminal	Flexible Cable
Caps on Large End of Bulb	
Backing Electrode	Recessed Small Ball (JEDEC J1-22)
Collecting Electrode	Recessed Small Ball (JEDEC J1-22)
Collimating Electrode	Recessed Small Ball (JEDEC J1-22)
Base	25 pin Two Tier Deci-Quindecimal (JEDEC B25-216)
Mounting Position	Any

MAXIMUM RATINGS:

Absolute Maximum Values

Writing Gun:

(Reference Voltage is Writing Gun Cathode)

Grids 2 & 4 Voltage♦	3000	max.	Volts
With Respect to Viewing Gun Cathode	200	max.	Volts
Grid 3 Voltage (Focus)	2000	max.	Volts
Negative with Respect to Viewing Gun Cathode	2600	max.	Volts
Grid 1 Voltage:			
Negative Bias Value	200	max.	Volts
Positive Bias Value	0	max.	Volts
Positive Peak Value	2	max.	Volts
Cathode Voltage Negative with Respect to Viewing Gun Cathode	2800	max.	Volts
Voltage Between any Deflection Electrode and Grids 2 & 4:♦			
Positive or Negative Peak Value	500	max.	Volts
Peak Heater-Cathode Voltage:			
Heater Positive or Negative with Respect to Cathode	125	max.	Volts

Viewing Gun:

(Reference Voltage is Viewing Gun Cathode)

Viewing Screen Voltage	11000	max.	Volts
Grid 5 Voltage (Backing Electrode)	35	max.	Volts
Grid 4 Voltage (Collecting Electrode)	300	max.	Volts
Grid 3 Voltage (Collimating Electrode)	300	max.	Volts
Grid 2 Voltage (Accelerating Electrode)♦	200	max.	Volts
Grid 1 Voltage:			
Negative Bias Value	150	max.	Volts
Positive Bias Value	0	max.	Volts
Peak Heater-Cathode Voltage			
Heater Positive or Negative with Respect to Cathode	125	max.	Volts

LIMITING CIRCUIT VALUES

Viewing Screen Series Current-Limiting Resistance	1.0	min.	Megohm
Backing Electrode Circuit Resistance	5000	max.	Ohms
Collecting Electrode Unbypassed Series Current-Limiting Resistance	22000	min.	Ohms
Grid 1 Circuit Resistance	1.0	max.	Megohm
Resistance in Any Deflecting Electrode Circuit⊕	0.1	max.	Megohm

ENVIRONMENTAL LIMITS

Atmospheric Pressure	60 max.	P.S.I.
Altitude (Non-pressurized)	60,000 max.	Feet
Temperature:		
Operating	0 to 50	°C
Non-Operating	-60 to 80	°C
Relative Humidity (Non-Operating)	95	Percent

Vibration .... Sinusoidal Vibration from 10 to 50 cycles per second with a total excursion of 0.015 inches and from 50 to 500 cycles per second with 2 g acceleration will not damage the tube.

TYPICAL OPERATING CONDITIONS AND CHARACTERISTICS

Note: Damage to the ♦ 7268 ♦ may occur if the Writing-Gun beam is turned on before the Viewing-Gun-beam current has reached normal operating value or if the Viewing-Gun beam is turned off before the Writing-Gun beam.

Reference Point for DC Voltages is Ground

Writing Guns:			
Grids 2 & 4 Voltage♠		50 to 125	Volts
Grid 3 Voltage (Focus)		-1975 to -2150	Volts
Grid 1 Voltage to Writing Gun Cathode		0 to -100	Volts
Cathode Voltage		-2400	Volts
Grids 2 & 4 Current♠		100	μampere
Grid 3 Current (per gun)		-10 to 5	μampere
Cathode Current		See CE-A 1472	
Deflection Factors			
Deflecting Electrodes 1 and 2♦		80 to 100	V dc/In.
Deflecting Electrodes 3 and 4♦		80 to 100	V dc/In.
Focused Beam Position†			0.5 Inch
Viewing Gun:	Range	Typical	
Viewing Screen Voltage	8000 to 11000	10000	Volts
Grid 5 Voltage (Backing Electrode)	0 to 10	2	Volts
Grid 4 Voltage (Collecting Electrode)	175 to 300	265	Volts
Grid 3 Voltage (Collimating Electrode)	5 to 150	75	Volts
Grid 2 Voltage♠	50 to 125	90	Volts
Grid 1 Voltage	0 to -50	0	Volts
Cathode			Grounded
Viewing Screen Current		250	μamperes
Grid 5 Current (Backing Electrode)		2	μamperes
Grid 4 Current (Collecting Electrode)		1.5	Ma.
Grid 3 Current (Collimating Electrode)		200	μamperes
Cathode Current		2	Ma.

♠ Grids 2 & 4 of both Writing Guns are internally connected together and to Grid 2 of the Viewing Gun.

♦ For other values of cathode to Grids 2 & 4 Voltages, the deflection factor is approximately 32 to 40 V dc/In./KV of cathode to Grids 2 & 4 Voltage.

† With all deflecting electrodes tied to Grids 2 & 4, and erasure at a convenient value the undeflected, focused spots will fall within a circle of 0.5 inch radius, centered on the tube faceplate.

⊕ Approximately equal resistances should be used in each deflecting-electrode circuit.

AVERAGE WRITING GUN ANODE TRANSFER CHARACTERISTIC

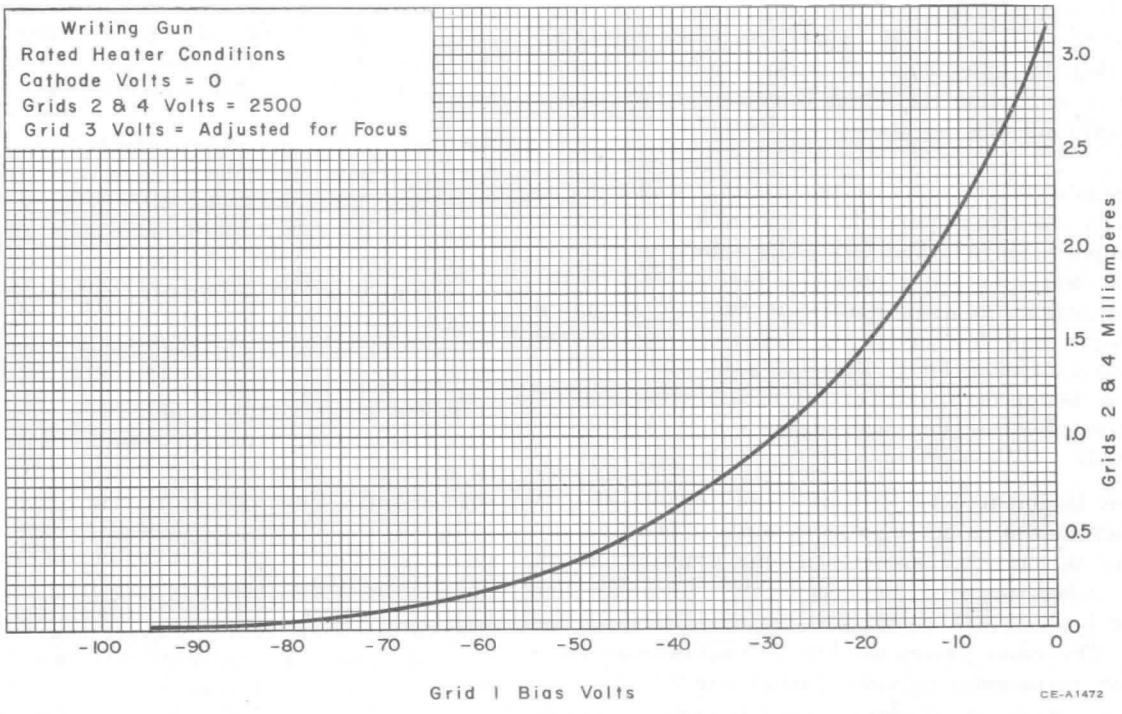

PERFORMANCE DATA

Viewing Time	5	Seconds
Erasing Time	50	Milliseconds
Display Uniformity (Δep min.)	1	Volt
Writing Speed	36,000	Inches/Second
Half Tones	5	
Brightness (Screen Voltage = 10 KV)	2500	Ft-Lamberts
Contrast Ratio	5	
Resolution	50	Lines/Inch
Grid Drive	20	Volts

Methods of Measuring Tube Performance

Viewing Time: A standard raster is written to saturated brightness with overlapping lines. The brightness level near the center of the viewing screen is then measured with a spot photometer. For this measurement, the color response of the measuring device is unimportant, as only relative brightness readings are required. The complete raster is then erased to visual extinction and the erase pulse removed. The screen is allowed to increase in brightness, and the time interval required for the brightness level at the center of the screen to increase to 10% of the initial brightness level is taken as the viewing time.

Erasing Time: Erasure is produced by positive rectangular pulses applied to the backing electrode. With an erase pulse amplitude adjustable from 2 to 10 volts peak-to-peak, complete erasure may be accomplished in 50 milliseconds from the start of the pulse, or when the sum of the duration of the pulses is 50 milliseconds. Note that by adjustment of pulse amplitude, shape, duration, and pulse repetition frequency it is possible to adjust total time for erasure as desired.

The erasing time under stated erasing conditions is taken as the time required for the flood beam to reduce the output luminence from 90% of its saturated value to 10% of that value. A rectangular raster covering the entire viewing area is written to 90% of saturated brightness and the raster is erased by pulsing the backing electrode for a known length of time. The process is repeated and the length of the erase pulse is changed until the desired degree of erasure is obtained.

Display Uniformity (Δ ep min.): The difference between the amplitude of an erase pulse required to brighten any area of an unwritten screen, and the amplitude of an erase pulse required to completely illuminate the screen is described as the display uniformity, (Δ ep-min.). The erase pulses used for this measurement are positive rectangular pulses adjusted from 2 to 10 volts peak to peak to produce complete erasure in 50 milliseconds.

Writing Speed: This is the maximum scanning speed at which a raster can be written to a specified brightness in one frame time at a writing gun cathode current below a specified value. A raster is applied having frequencies and trace length necessary to produce the specified scanning speed. The focus electrode is adjusted for best focus at the center of the raster. The tube is erased to cutoff and with a rectangular drive pulse of adjustable amplitude a single raster is written. This step is repeated, moving the lines progressively closer together until the individual lines in the raster cannot be discerned visually. As the lines approach the merging condition, the control grid pulse ampitude is adjusted to give a written raster with brightness of 2500 foot lamberts. When this brightness is achieved and the lines cannot be discerned visually, the condition of visually limited contrast ratio exists and it is under this condition that the cathode current is to be read. The cathode current measured with an oscilloscope is less than one milliampere.

Contrast Ratio: A trace is written to saturation brightness while continuously writing and erasing. Using positive rectangular erase pulses variable from 2 to 10 volts peak-to-peak, the persistence (time required for a written area to be reduced to 10% of saturated brightness) is adjusted to 2 seconds. The ratio of brightnesses in the written and unwritten areas is defined as the contrast ratio. This measurement is made with a maximum ambient brightness of 10 foot-lamberts.

Resolution: Erasure is adjusted to a convenient value. A 60 cps sawtooth voltage is applied to the horizontal deflection electrodes and 2100 to 6300 cps sawtooth voltage to the vertical deflection electrodes. The light level is set at 1000 ± 5% foot-lamberts with a vertical trace length of 3-1/2 inches. The raster is expanded horizontally so that the number of lines can be counted. Adjustment is made for best focus at center of raster. The raster is compressed horizontally until lines merge or just overlap at center of screen. The width of this compressed pattern perpendicular to the line structure is measured. Resolution is the number of lines in the compressed pattern divided by its width. The scanning voltages are interchanged and the resolution is measured as before at points on the center vertical axis 1½ inches above and below the center of the tube face.

Grid Drive: This is the drive required for writing to 90% of saturated brightness with a writing speed of 36,000 inches per second in 1 scan. Note the writing gun drive characteristic. In the useful region, writing speed is proportional to writing current.

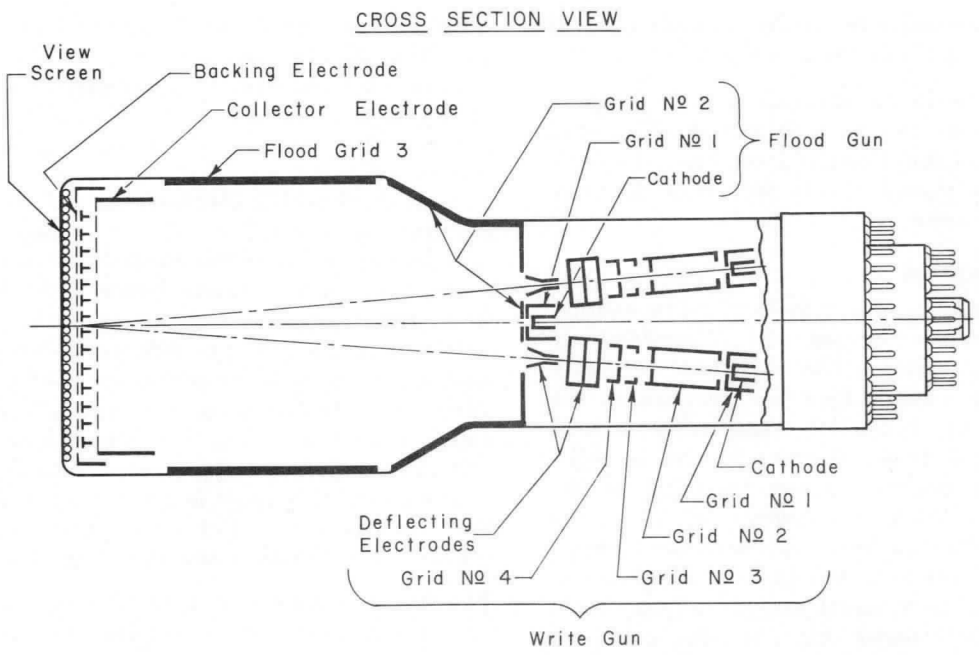

Principles of Operation

The WL-7268 contains, in addition to a phosphor screen and writing guns similar to those of conventional cathode-ray tubes, a storage surface, a secondary-electron collimating system, all of which can be seen in Cross Section View.

The storage surface is a dielectric material deposited on a fine metallic mesh called the backing electrode. Initially this surface is charged to a uniform potential near the viewing gun cathode voltage. Either or both of the writing guns scan the storage surface and create a charge pattern by secondary emission from the dielectric material. Because this dielectric material is an excellent insulator, the charge pattern does not leak away, but remains for a period of time, as long as a week under non-operating conditions. The secondary electrons liberated from the storage surface are attracted to a collecting mesh.

The reading or viewing gun does not scan the screen, but produces a wide-angle beam of electrons which "floods" the entire storage mesh and penetrates through its holes to bombard the phosphor screen. The charge pattern written upon the storage surface controls the viewing gun beam in a manner similar to the control of plate current by the signal applied to the control grid of a triode. In this way the signals applied to the two writing guns are converted to patterns on the storage surface, and these produce corresponding patterns on the phosphor screen. The penetration of electrons through the storage mesh is proportional to the charge written upon it, hence, intermediate shades of gray or half-tones may be reproduced. Because of the high current density of the viewing beam, the high accelerating potential on the screen, and simultaneous bombardment of all portions of the viewing screen, the display is extremely bright.

The Viewing Section

The viewing section consists of the following elements: a cathode, control grid, accelerating grid, collimating electrode, collecting electrode, backing electrode, and viewing screen.

The cathode is oxide coated and indirectly heated. Grids 1 and 2 are conventional aperture grids and the collimating electrode grid 3 is a conductive coating applied to the bulb wall. The collecting electrode is a fine metallic mesh mounted slightly toward the cathode from the backing electrode.

The backing electrode is an extremely fine metallic mesh upon which the dielectric or storage material is

deposited. This material is on the cathode side of the mesh as shown in Cross Section View.

The viewing screen is an aluminized P20 phosphor having short persistence and high visual efficiency. The Spectral Response Curves show that the peak radiation from this phosphor coincides with the peak sensitivity of the human eye.

The Viewing Operation

The viewing gun produces a wide angle, low energy, high density electron stream which continuously floods the storage surface. The electrons are highly divergent as they emerge from the aperture of the accelerating grid no. 2, but by proper adjustment of grids no. 2, 3, and 4, the electron stream is collimated to provide uniform, normal flooding of the backing electrode. It is necessary that all of the electrons of the viewing beam approach the storage surface in paths normal to the backing electrode in order that they will have equal energy components in this direction. Only under this operating condition will equal charges at various points on the storage surface have equal control of the flood beam. Thus, collimation is necessary for uniformity of display.

The functions of the collecting electrode are several. In addition to its effect upon collimation, it serves to accelerate electrons in the beam; it repels positive ions produced by collisions of electrons with gas molecules in the region between cathode and collector, thus preventing destruction of the stored pattern by ions; it collects secondary electrons produced when the writing beams impinge upon the storage surface; and it collects viewing beam electrons turned back near the storage surface when its potential is negative.

When the viewing section voltages are applied, some of the viewing beam electrons are intercepted by the collector mesh, and others are decelerated to near zero velocity at the storage grid. Their velocity is so low at this point that fewer secondary electrons are emitted than strike the storage surface. Thus electrons accumulate until the potential is approximately the same as the viewing gun cathode, or zero potential.

At this time when the collimated viewing beam approaches the storage mesh, electrons cannot land upon the storage mesh, but will either return to the more positive collecting electrode or penetrate through the holes of the backing electrode to be accelerated to the phosphor viewing screen producing a bright display. The brightness of the screen under this condition is designated as "saturated brightness". A condition of equilibrium exists, and the storage surface remains charged to approximately zero potential. If the storage surface is made positive by a writing gun or other means, the surface will be immediately restored to zero potential by the viewing gun beam. If, now the backing electrode is suddenly made more positive by several volts, the storage surface will also become positive momentarily because of the very close capacitive coupling between the backing electrode and storage surface, but again the viewing beam will restore the storage surface to zero potential. If next the backing electrode is returned to its original value, the storage surface potential will drop by an equal amount to a negative potential and will retain this charge since viewing beam electrons cannot land. If this negative voltage is great enough, it will cut off the viewing beam electrons preventing them from reaching the phosphor and resulting in a dark screen.

The writing guns are used to produce a charge pattern upon the storage surface varying in potential from the storage surface cutoff value to zero potential. Since these potentials are at or below viewing gun cathode potential, no viewing beam electrons may land upon the storage surface to destroy the written pattern and it will remain until erased or degraded by positive ions produced by collision of electrons in the viewing beam with residual traces of gas between the viewing screen and collecting electrode.

Without altering its own form the stored charge pattern in thus able to control the electrons impinging upon the screen, producing a bright stored image with full tone range from visual extinction to saturated brightness.

The Writing Guns

The two writing guns are of identical design and are similar to those found in electrostatically focused and deflected oscilloscope tubes. They are capable of forming a well defined beam having high current-density resulting in excellent resolution and high writing speed.

Both guns are shown in Cross Section View and each consists of an oxide coated, indirectly heated cathode, a control grid 1, first and second anodes (grids 2 & 4) which are internally connected, a focusing grid 3, and horizontal and vertical deflection plates.

The Writing Operation

The writing guns are generally operated with the cathode at -2400 volts with respect to the viewing-gun cathode. At this potential the electrons from the

writing beam have sufficient energy to cause the secondary emission ratio at the storage surface to be greater than unity. Thus, since more electrons are leaving the storage surface than are arriving. the surface assumes a less-negative potential whenever the beam strikes, Since the secondaries are attracted to the positive collecting electrode it would appear that the writing beam could charge the storage surface to collecting electrode potential, but in practice the viewing beam lands upon the surface whenever it tends to become positive and returns it to approximately viewing-gun cathode potential.

The writing beam electrons striking the storage surface can then result in potentials varying from storage-grid-cutoff voltage to approximately zero potential. The storage surface potential is controlled over this range by the amplitude and duration of the writing beam current which is determined by the signal applied to the control grid.

As was described previously, the potential at any point on the storage surface determines the number of viewing beam electrons passing through the storage mesh holes in that immediate vicinity. When any point is sufficiently positive to allow passage of electrons, they will be accelerated by the high viewing screen potential and strike the phosphor directly opposite that point. The result is a bright spot on the viewing screen having a size only slightly larger than that of the corresponding point where the writing gun beam struck the storage surface. The brightness of this spot is directly proportional to the density and velocity of the electrons landing on the element, the density being determined by the elemental charges of the storage surface, and the velocity by the potential of the viewing screen.

The image brightness may be varied by adjusting the screen potential, but because the screen is aluminized, the light output decreases rapidly below 5000 volts. Operation below this value is not recommended.

The Erasing Operation

A method of preparing the storage surface for the writing operation has already been described under The Viewing Operation. This technique, which involves charging the storage surface to a negative value by the momentary application of a positive potential to the backing electrode, is actually an erasing method known as static erasure.

During the application of the positive potential to the backing electrode, viewing-beam electrons land on the storage surface and drive it uniformly to cathode potential thus erasing any stored information.

A disadvantage of this method is that during erasure and subsequent re-writing no information or only incomplete information is displayed. Also the entire screen is illuminated to the saturation brightness level or higher during erasure.

In most applications it is desirable to present a display which gradually decays after a given interval of time. This type of operation may be obtained by applying a continuous series of positive pulses to the backing electrode at a rate sufficiently fast to prevent visible phosphor flicker. The technique of applying a series of pulses to the backing electrode is known as dynamic erasure.

The amount of charge erased during each erase pulse depends upon pulse duration, shape and amplitude. These factors together with erasing-pulse repetition frequency determine the rate at which the observed display decays.

If the erasing pulses are smaller in amplitude than the viewing-beam cutoff voltage, erasure will not be complete, whereas if the pulses are greater than cutoff they will eventually drive the storage surface below cutoff or "blacker than black". Therefore it is not advisable to use erase pulse amplitude as a means of adjusting erasing time.

When a rectangular erasing pulse is used, all portions of the storage surface will simultaneously become positive with respect to the viewing-gun cathode and viewing-beam electrons will be deposited at nearly the same rate over the entire surface regardless of initial charge. Thus charges representing the brighter elements will remain after other elements have been erased and the brighter areas will be visible for a longer period than the darker areas.

If a positive-going sawtooth erasing pulse is used, the least-negative storage elements will reach cathode potential before the remaining elements, thus allowing viewing-beam electrons to land on elements representing brighter areas for a longer period than on those representing darker areas. With this type of proportional erasure, half-tones will persist as long as bright areas.

For applications involving half-tone display, the rectangular erase pulses should be adjusted in amplitude so that the storage surface is charged to exactly cutoff potential by the erasing operation.

For applications such as radar, where noise must be

suppressed, a more positive erase pulse may be used to drive the storage surface several volts below cutoff. The writing beam must then scan the surface several times to bring the written elements above cutoff.

If possible the erase-pulse amplitude should be adjusted so that the noise component of the writing gun signal is just sufficient to bring the storage surface to cutoff. The signal above this level will then allow viewing-beam electrons to produce a display representing that signal without any noise background.

SPECTRAL RESPONSE CHARACTERISTICS

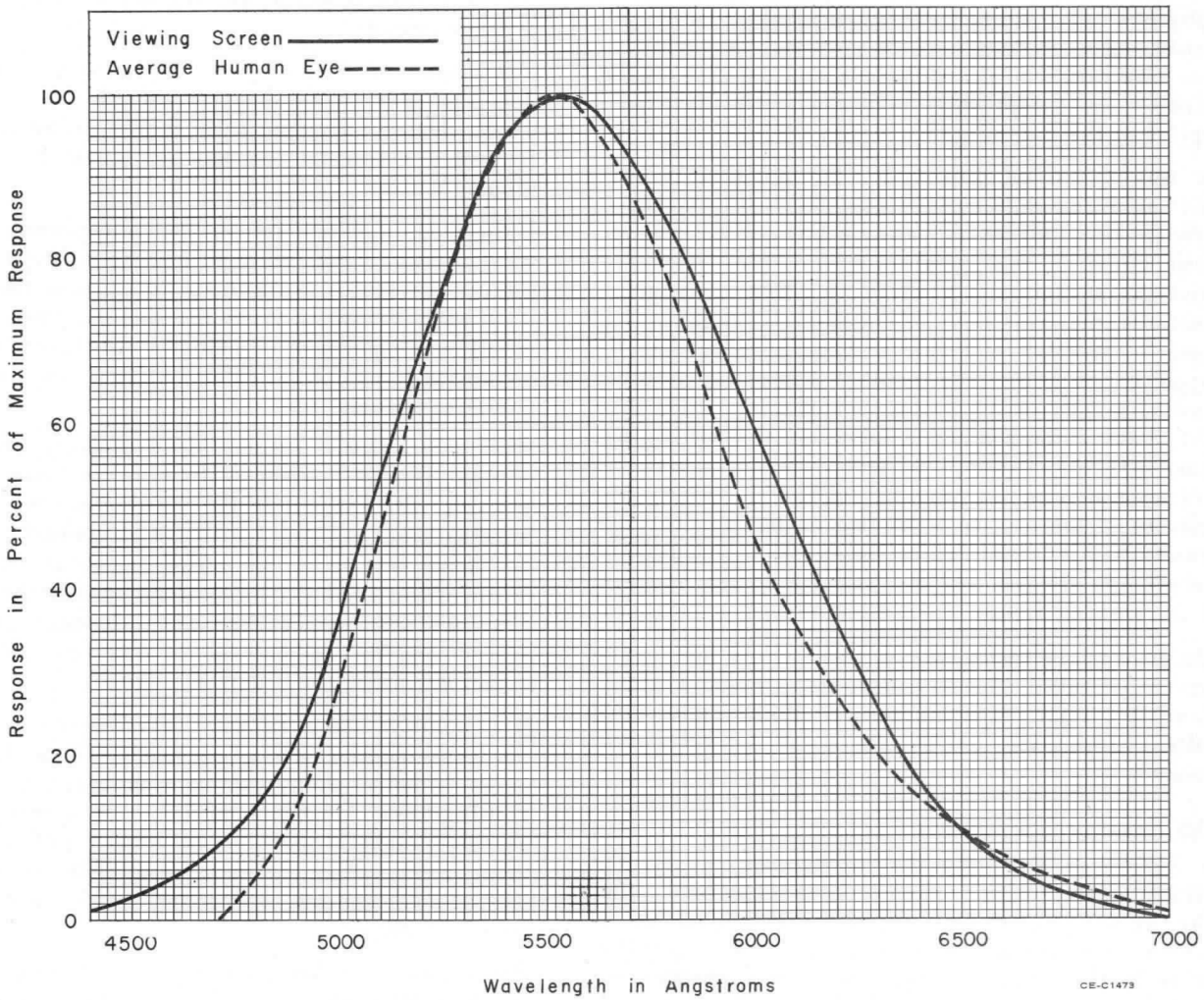

AVERAGE WRITING BEAM TRANSFER CHARACTERISTIC

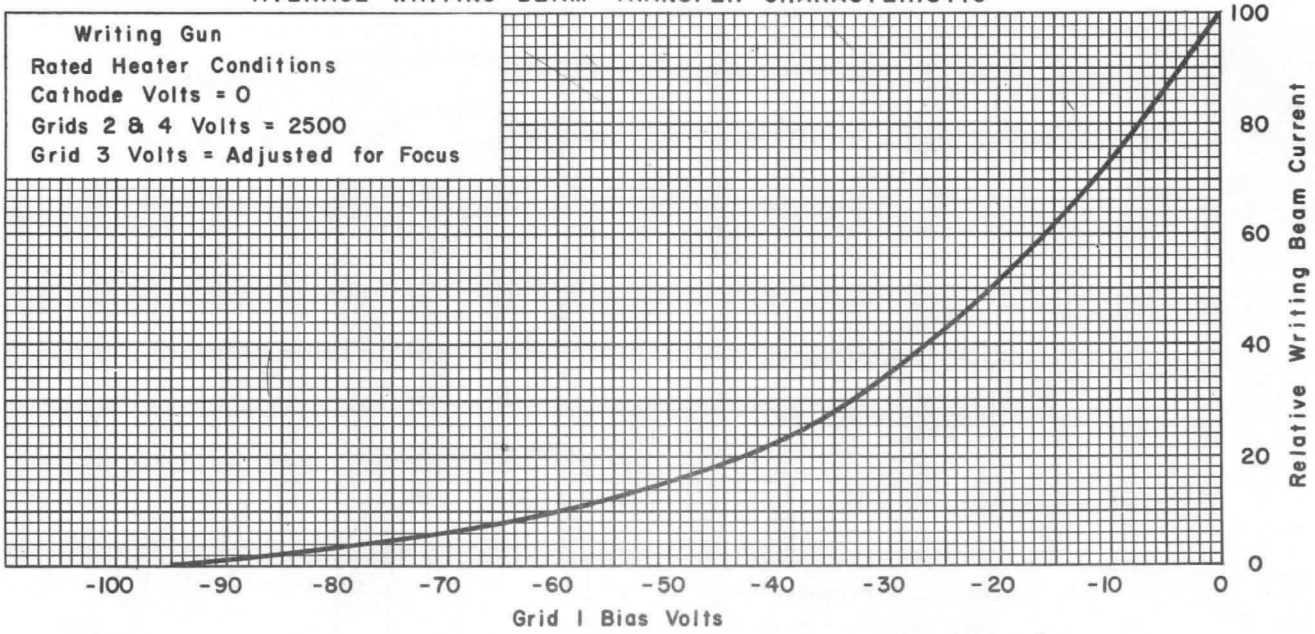

CE-A1471 R1

SCREEN BRIGHTNESS AS A FUNCTION OF SCREEN POTENTIAL

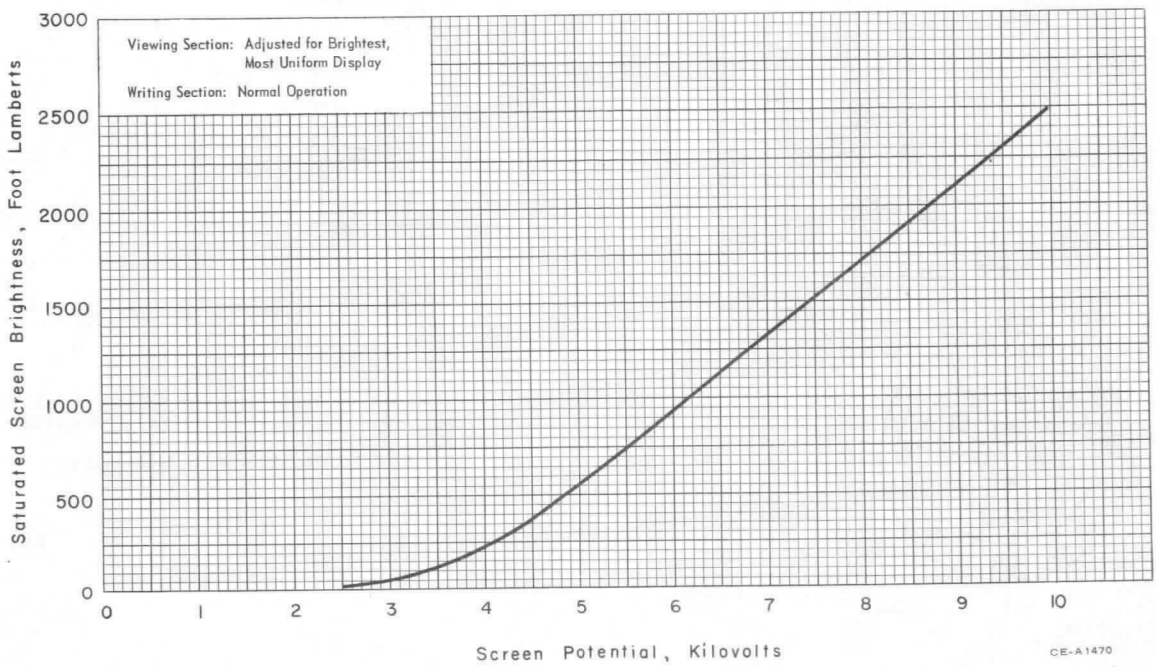

CE-A1470

COMMERCIAL OUTLINE

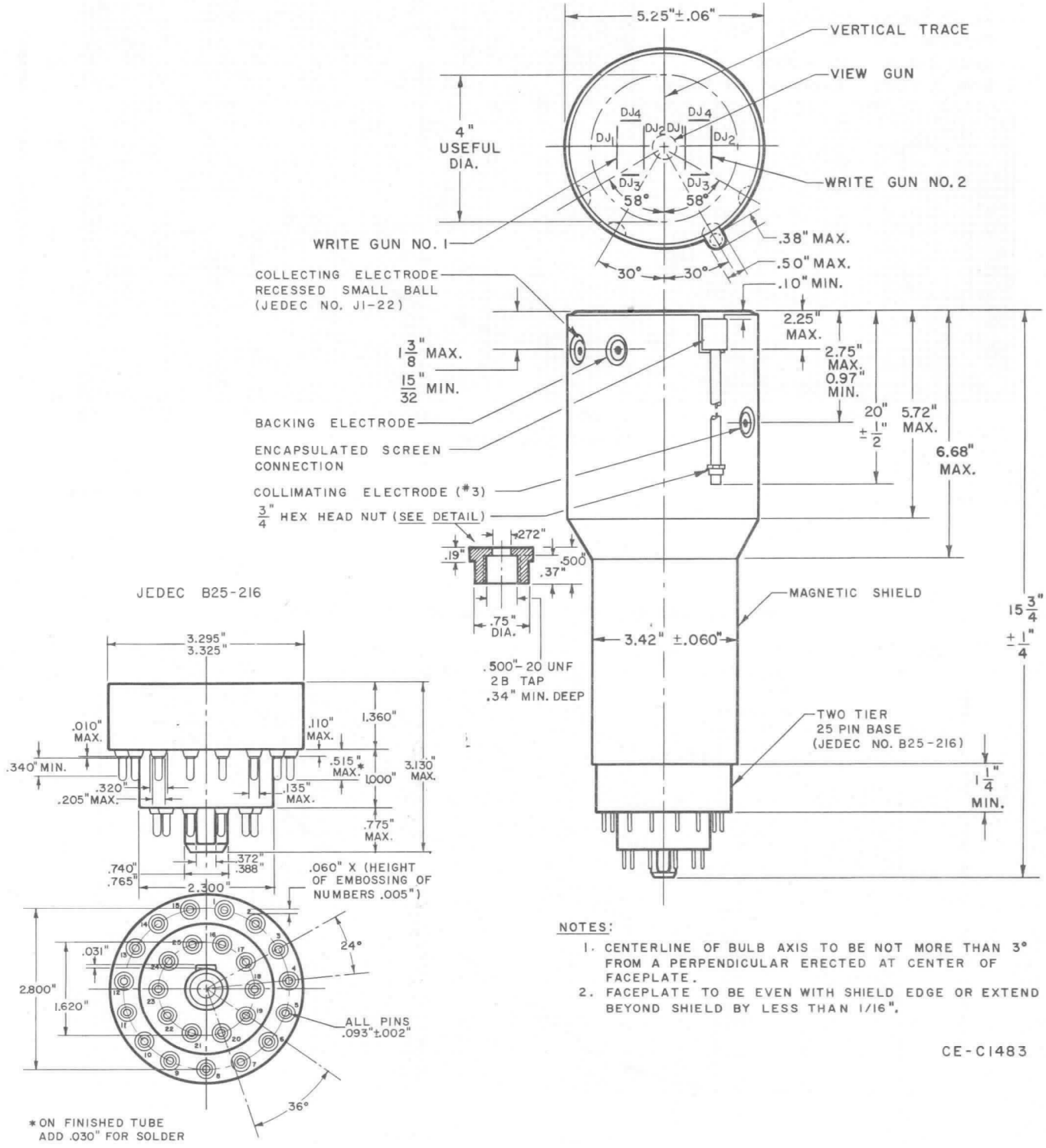

NOTES:

1. CENTERLINE OF BULB AXIS TO BE NOT MORE THAN 3° FROM A PERPENDICULAR ERECTED AT CENTER OF FACEPLATE.
2. FACEPLATE TO BE EVEN WITH SHIELD EDGE OR EXTEND BEYOND SHIELD BY LESS THAN 1/16".

CE-C1483

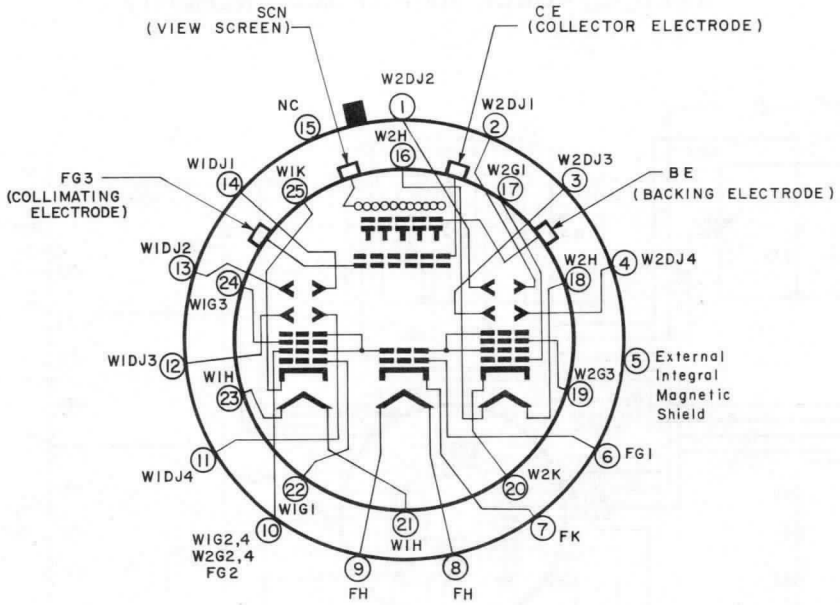

BOTTOM VIEW

CE-A1399 R2

INDEX OF TERMINALS

BASE PINS

Pin No.	Gun	Element
1	Write (2)	Deflection Electrode 2
2	Write (2)	Deflection Electrode 1
3	Write (2)	Deflection Electrode 3
4	Write (2)	Deflection Electrode 4
5	External Integral Magnetic Shield	
6	Flood	Grid 1
7	Flood	Cathode
8	Flood	Heater
9	Flood	Heater
10	Write (1)	Grids 2 & 4
	Write (2)	Grids 2 & 4
	Flood	Grid 2
11	Write (1)	Deflection Electrode 4
12	Write (1)	Deflection Electrode 3
13	Write (1)	Deflection Electrode 2
14	Write (1)	Deflection Electrode 1
15	NO CONNECTION (DO NOT USE)	
16	Write (2)	Heater
17	Write (2)	Grid 1
18	Write (2)	Heater
19	Write (2)	Grid 3
20	Write (2)	Cathode
21	Write (1)	Heater
22	Write (1)	Grid 1
23	Write (1)	Heater
24	Write (1)	Grid 3
25	Write (1)	Cathode

CAPS ON LARGE END OF BULB

Gun	Element
Flood	Collimating Electrode
Flood	View Screen
Flood	Collector Electrode
Flood	Backing Electrode

TYPICAL POWER SUPPLY REQUIREMENTS

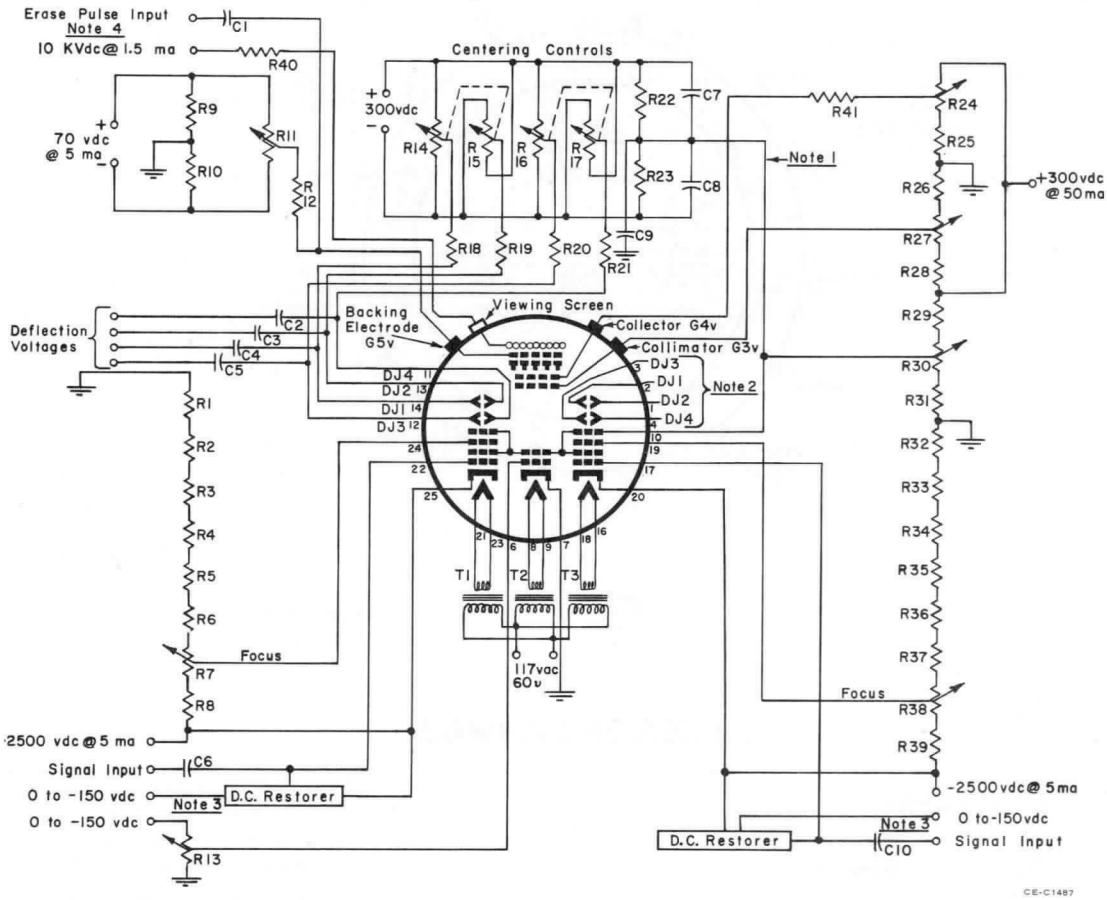

Note 1: The mean deflection potential is referred to the writing gun final anode potential to prevent astigmatism.
Note 2: Centering and deflection circuitry for Writing Gun 2 is similar to that shown for Writing Gun 1.
Note 3: Voltages are with respect to each writing gun cathode. Entire supply must be insulated from ground for 4000 volts.
Note 4: Erase Pulse Characteristics, Amplitude: 0 to 10 volts peak-to-peak, Width: 2 to 10 microseconds, Frequency: 0 to 1000 pulses per second

C_1: 0.1 μf, 200 volts
C_2, C_3, C_4, C_5: Value depends on deflection-voltage frequency and waveform
C_6, C_{10}: Value depends on signal-voltage frequency and waveform, 4000 volts
C_7, C_8: 0.05 μf, 600 volts
C_9: 0.5 μf, 600 volts
R_1, R_{32}: 91,000 ohms, 1 watt
R_2, R_{25}, R_{29}, R_{33}: 100,000 ohms, 1 watt
R_3, R_4, R_5, R_6, R_{34}, R_{35}, R_{36}, R_{37}: 470,000 ohms, 2 watts
R_7: Write Gun 1 Focus Control, 250,000-ohm potentiometer, 2 watts
R_8, R_{39}: 180,000 ohm, 1 watt
R_9, R_{10}, R_{22}, R_{23}: 1 megohm, 0.5 watt
R_{11}: Backing Electrode Control 100,000-ohm potentiometer, 2 watts
R_{12}: 5,000 ohm, 1 watt
R_{13}: View Gun Grid 1 Control, 250,000-ohm potentiometer 2 watts
R_{14}, R_{15}: Write Gun 1 DJ_1 & DJ_2 Centering Controls Dual 1 megohm potentiometers, 2 watts
R_{16}, R_{17}: Write Gun 1 DJ_3 & DJ_4 Centering Controls Dual 1 megohm potentiometers, 2 watts
R_{18}, R_{19}, R_{20}, R_{21}: 100,000 ohm, 0.5 watt
R_{24}: Collector Control, 200,000-ohm potentiometer, 2 watts
R_{26}, R_{28}, R_{31}: 51,000 ohm, 1 watt
R_{27}: Collimator Control, 200,000-ohm potentiometer, 2 watts
R_{30}: Accelerating Anode Control, 150,000 ohm potenti- 2 watts
R_{38}: Write Gun 2 Focus Control, 250,000-ohm potentiometer, 2 watts
R_{40}: 1 megohm, 5 watts
R_{41}: 22,000 ohm, 1 watt
T_1, T_3: Filament Transformer Primary 117 volts, Secondary 6.3 volts @ 1 ampere Insulated for 4000 volts
T_2: Filament Transformer Primary 117 volts, Secondary 6.3 volts @ 1 ampere.

The information contained herein is furnished without assuming any obligations. The description and illustration of circuits herein does not convey to the purchaser of tubes any license for circuits under the patent claims of Westinghouse Electric Corporation or others.

SLOW SCAN VIDICON TYPE 7290

The 7290 is a small vidicon type camera tube designed especially for slow-scan or delayed readout applications. It features excellent light integration and storage characteristics. The tube has extremely low dark leakage and maintains useful resolution for storage or frame scan periods up to several minutes.

The characteristics of the 7290 make it ideal for such applications as: Narrow band pass transmission where the tube is scanned at reduced rates, to permit the transmission of video information over telephone lines or other narrow-band facilities; Delayed readout where the tube is exposed for a short period to stop motion and then readout at any convenient scan rate; Integration of low photosurface illumination where, by use of low frame rates, or by the use of normal frame rate with intermittent readout, the light from poorly illuminated scenes is gathered over a period of time and thus serves to increase output.

ELECTRICAL		
Cathode	Coated Unipotential	
Heater:		
Voltage (ac or dc)	6.3 ± 10%	Volts
Current	0.6	Ampere
Direct Interelectrode Capacitance:		
Signal Electrode to all other Electrodes	4.5	$\mu\mu$f
Focusing Method	Magnetic	
Deflection Method	Magnetic	
MECHANICAL		
Overall Length	6-1/4" ± 1/4"	
Greatest Diameter	1.125" ± 0.010"	
Bulb	T-8	
Base	Small-Button, 8-Pin (JEDEC E8-11)	
Operating Position	Any	
Basing	8HM	
MAXIMUM RATINGS		
Absolute Maximum System		
Signal-Electrode Voltage	25 max.	Volts
Grid 4 & Grid 3 Voltage	1000 max.	Volts
Grid 2 Voltage	350 max.	Volts
Grid 1 Voltage:		
Negative Bias Value	125 max.	Volts
Positive Bias Value	0 max.	Volts
Heater-Cathode Voltage:		
Heater Negative with Respect to Cathode	125 max.	Volts
Heater Positive with Respect to Cathode	10 max.	Volts
Faceplate Temperature	45 max.	°C
TYPICAL OPERATION		
Signal-Electrode Voltage	10 to 25	Volts
Grid 4 (Decelerator) & Grid 3 (Beam Focus) Voltage	250	Volts
Grid 2 (Accelerator) Voltage	300	Volts
Grid 1 Voltage:		
(For Picture Cutoff▲)	−45 to −100	Volts
Min. Peak-to-Peak Blanking Voltage:		
When Applied to Grid 1	40	Volts
When Applied to Cathode	10	Volts
Field Strength at Center of Focusing Device	40	Gausses
Field Strength of Adjustable Alignment Coil	0 to 4	Gausses

▲ With no blanking voltage on Grid 1.

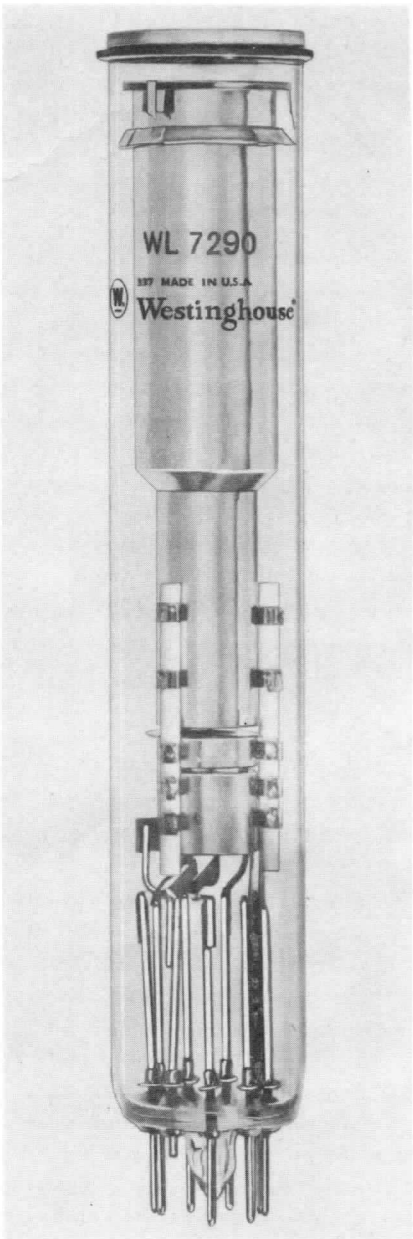

SENSITIVITY

Output of the 7290 is a function of target illumination, target voltage, area scanned, and rate of scan. If all other parameters are held constant, output is proportional to the area which is scanned. Figures 1, 2, 3 & 4 illustrate the relationship between illumination, target voltage, and scan rate for a typical 7290. In all cases the scanned target area was 1/2" × 3/8", and the raster contained approximately 500 lines.

Tube output current is found to remain approximately constant at a given readout rate if the product of target illumination and exposure time is a constant, at least through the exposure time range of 10 milliseconds to 30 seconds. For example, a tube scanned at a 10 second frame rate with a continuous illumination of 0.01 foot candles would give the same output if exposed at 10 foot candles for 0.01 seconds during the retrace period and scanned in the dark.

In systems using the 7290, as with systems using other vidicons, the noise generated in the video amplifier and/or target load resistor is greater than the noise generated in the tube. The signal output current at slow scan rates is less than at the conventional 30 frame per second rate, but this does not necessarily result in a low signal-to-noise ratio. The bandwidth required is usually much less with slow-scan, and the resistance of the target load can be increased accordingly to get higher signal voltage at the grid of the first preamplifier tube. As target load impedance is raised into the megohm range, special care must be excercised to prevent the pickup of hum and deflection transients.

RESOLUTION

The 7290, operating at standard 525 line 30 frame per second scan rates, in a TV camera chain having 8 mc. bandwidth and employing a low noise preamplifier (417A cascode or equivalent) will display 600 line resolution when viewing an EIA resolution chart. Tube voltages and focusing field in this instance are those indicated in the "TYPICAL OPERATION" section. An improvement in resolution at this scan rate may be obtained by increasing the Grid 3 and Grid 4 voltage, and focus field. Specially designed deflection and focusing components are required in this mode of operation to keep beam landing errors to a minimum, and attention must be paid to means for keeping the tube faceplate temperature below the maximum specified. Increased deflection current will also be required.

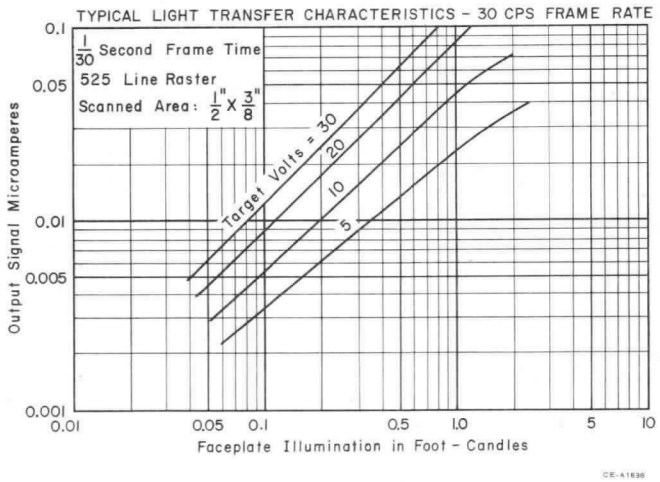

FIGURE 1

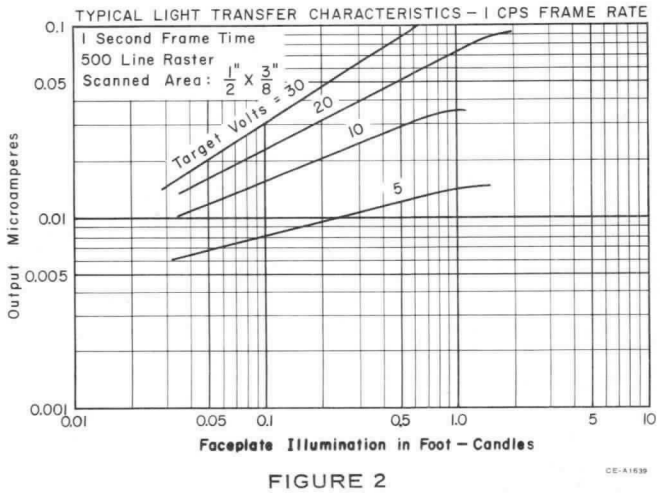

FIGURE 2

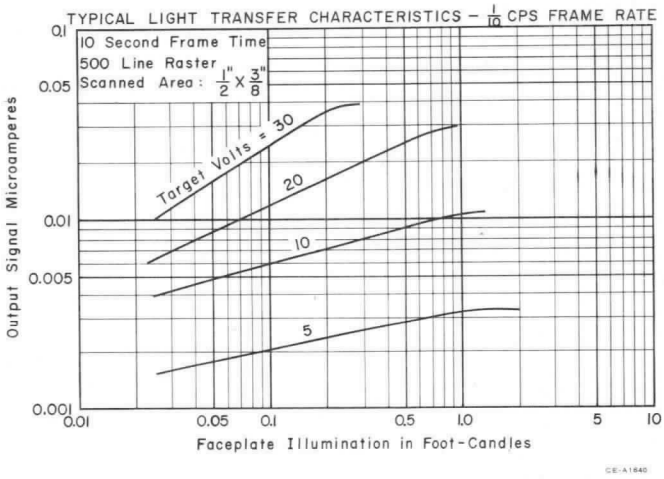

FIGURE 3

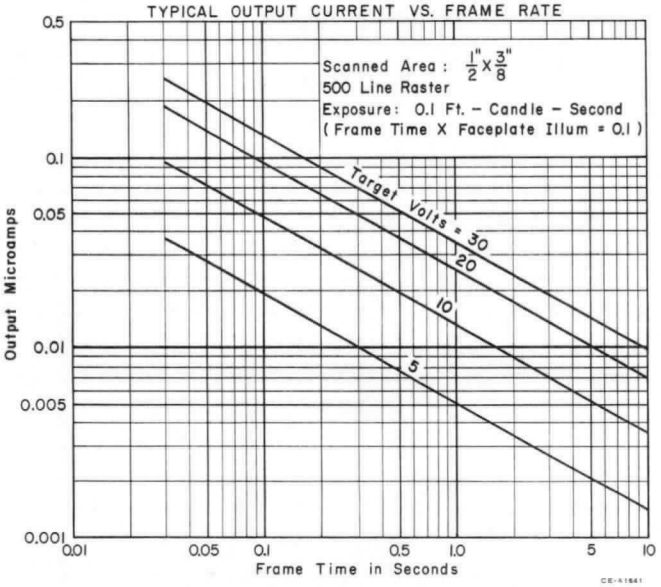

FIGURE 4

At long storage or frame times, lateral charge leakage along the photoconductor is the factor which limits resolution. Figure 5 shows the decrease in resolution at long frame or storage times. Figure 6 shows the decrease in output produced by front-to-back leakage under the same conditions for a typical 7290. Both curves are relatively independent of target voltage.

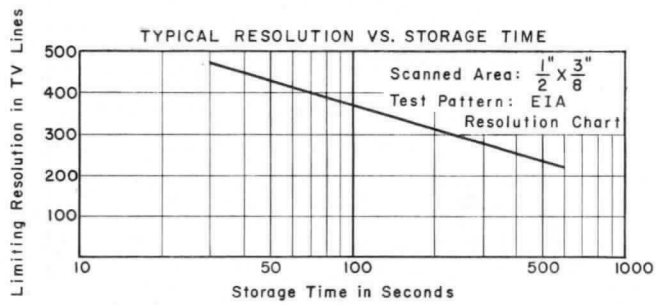

FIGURE 5

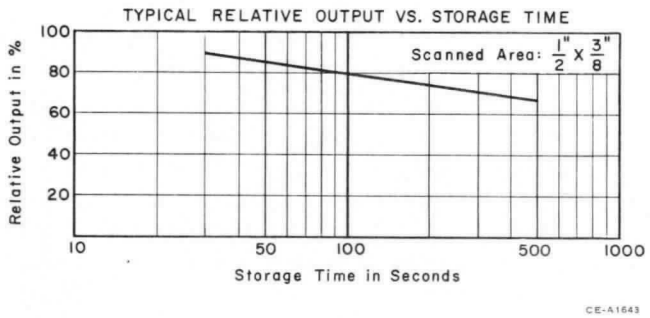

FIGURE 6

DARK CURRENT

Due to the extremely high dark resistivity of the 7290 target surface, dark current is usually considered negligible except at very low output levels. A value of 0.0002 microamperes has been measured at standard 30 frame per second scan rates.

RESIDUAL SIGNAL

The 7290 operates satisfactorily at long frame times through the mechanism of true charge storage. It is not a "sticky" or "laggy" vidicon. At the standard 525 line 30 frame per second rate, third field lag is approximately 30 to 40%. At long frame times the photoconductive lag is negligible and the degree to which information is erased upon readout depends on the beam current used. At beam currents giving optimum resolution, the amplitude of the readout during the second frame is typically about 20% of the first. The third frame readout may be of the order of 5% and the fourth frame readout negligible. These figures were obtained using non-interlaced scanning. Residual signal may be reduced by using higher values of beam current. The tube is thus well adapted for televising completely new information in each frame.

GAMMA

Gamma is the slope of the log-log plot of output against illumination and is defined mathematically as:

$$\gamma = \frac{\Delta \log I_{sig}}{\Delta \log \text{Illum.}}$$

It is found to be a function of the scan rate and target voltage as indicated in Figure 7.

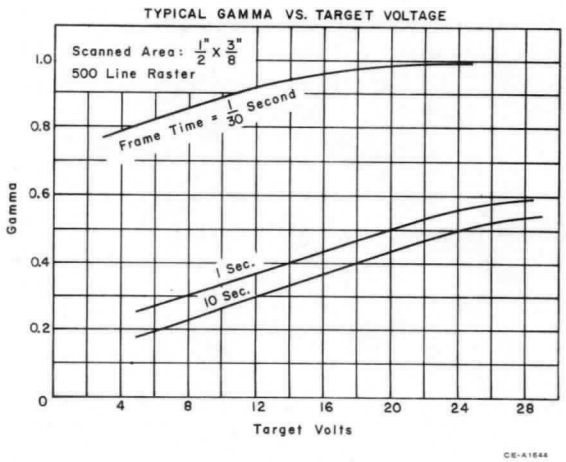

FIGURE 7

TARGET VOLTAGE

Each 7290 shipped is spot free at target potentials up to at least 15 volts when operated at the conventional 30 frame per second scan rate. Operation up to the absolute maximum of 25 volts is permissible, but spots may become visible at some potential above 15 volts. (These spots will disappear when the target voltage is again reduced.)

SCANNING

In conventional TV practice vidicons are scanned with a 4 × 3 aspect ratio rectangular raster, 1/2" × 3/8", so oriented that the horizontal scan is essentially parallel to the plane passing through the tube axis and short index pin. This convention ensures that the same area of the target will always be scanned. When the target of any vidicon is scanned for a period of time, the sensitivity of the scanned area experiences a slight but permanent change. If tube orientation with respect to the deflection yoke is subsequently changed, the outline of the previously scanned area will appear in the output.

If a 1 × 1 aspect ratio scan, PPI scan, or other non-standard scanning mode is desired, it may be necessary in some cases to ignore the above convention. The useful target area of the 7290 is contained within a circle 0.62 inch in diameter concentric with the tube axis. A 1 × 1 aspect ratio rectangle 7/16" × 7/16" or a PPI scan having a 0.62 inch maximum diameter could thus be used. The Grid 4 mesh is oriented to produce minimum moire when scan is parallel or perpendicular to the line through the axis and index pin. When linear scan is used it is desirable to employ this orientation. In any event, orientation once decided upon should be consistent so that the scanning will always be confined to the same area. For the same reasons underscanning should be avoided.

Because of the 7290's very uniform surface, and the relatively low target voltages at which it operates, optimum focus and output uniformity will be obtained with deflection components designed to cause the electron beam to land perpendicular to the target surface.

PRINCIPLES OF OPERATION

The 7290 consists basically of an evacuated tube, containing at one end a semitransparent photoconductive layer. The image of the subject to be televised is focused optically upon this photolayer which is scanned by a low velocity electron beam. The spectral response of this photolayer is shown in Figure 9. The photolayer consists of an extremely thin film of photoconductive material which is, substantially, an electrical insulator in the dark. When receiving the optical image of the subject each element of the photo layer surface becomes conductive to a degree related to the relative brightness of each corresponding section of the optical image. Each target element therefore, behaves similarly to a charged capacitor with leaky insulation, with one plate at a fixed potential and the other plate "floating". This causes the target surface potential to rise toward the signal plate potential to a degree relative to the individual illumination of each picture element.

During the scanning process, the electron beam deposits electrons on the target surface sufficient to return each surface element to cathode potential. This action gives rise to a current flow in the signal plate circuit which is a function of the rate of scan and the surface potential of each individual element undergoing scanning.

The polarity of this signal swings negatively for illuminated areas of the target.

The electron beam is generated by a gun assembly comprising a heater cathode, a control grid (G1) and an accelerating grid (G2). Focusing of the beam is achieved by the magnetic field from an external focusing coil in conjunction with the focusing electrode G3. Routine beam focus adjustments are made by variation of the potential of this electrode.

A fine mesh screen (G4) is internally connected to G3 and is located immediately in front of the scanned surface of the photolayer. G4 operates at the same potential as G3 and this establishes a uniform electrostatic field between the electrode and the photolayer. This field, in conjunction with the uniform magnetic field provided by the focusing coil insures that the scanning beam approaches the photolayer at an angle normal with respect to the target plane, a condition essential for returning the surface elements to cathode potential uniformly.

VIDICON CROSS SECTION VIEW

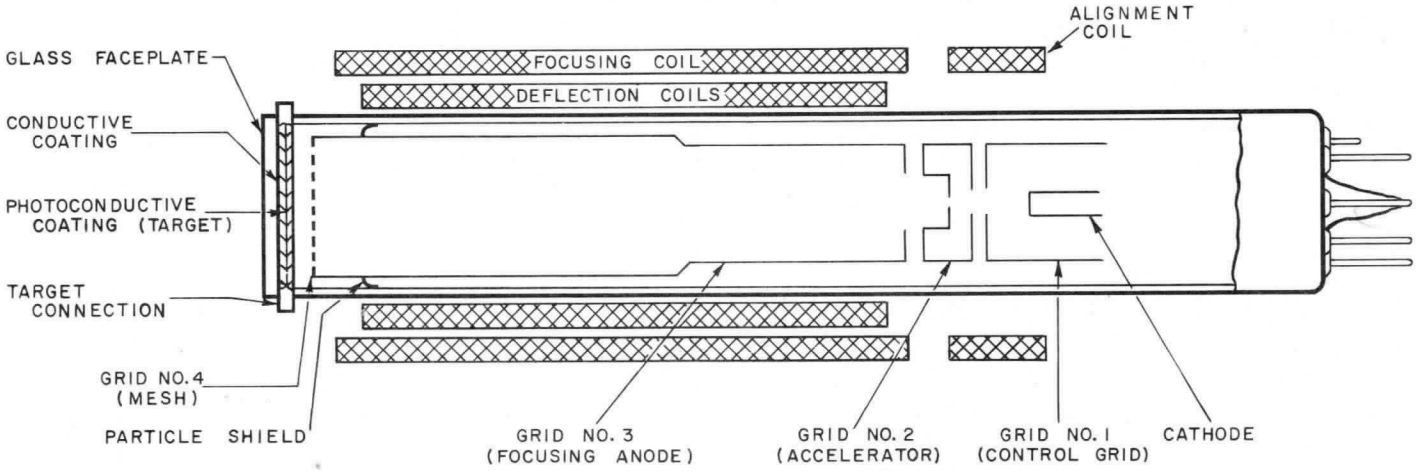

FIGURE 8

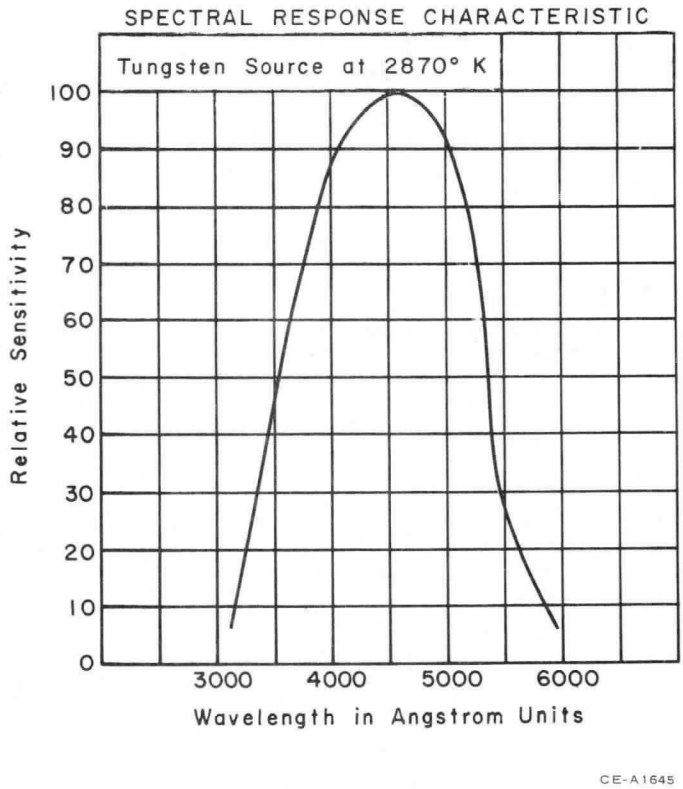

FIGURE 9

COMMERCIAL OUTLINE

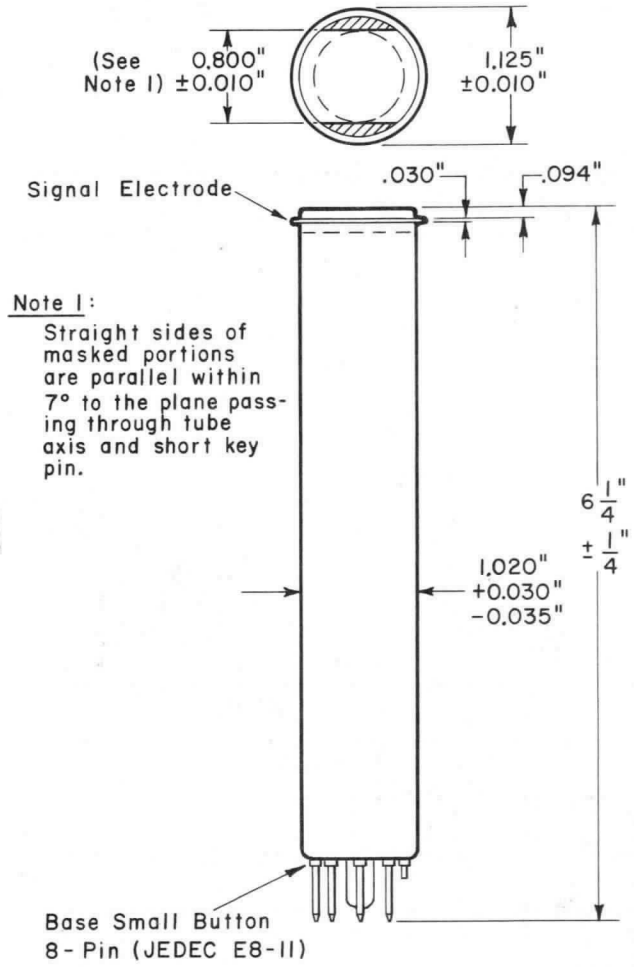

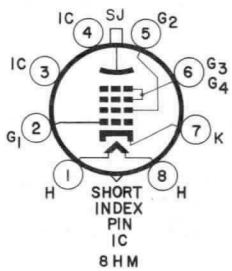

April 24, 1959

VIDICON TYPE WL-7325

The WL-7325 is a vidicon which is particularly suitable for the televising of live scenes over a wide range of scene illumination levels. It will replace directly the type 6198A but its greater sensitivity and other improved characteristics enable satisfactory pictures to be produced with an average illumination as low as one tenth of a foot candle on the faceplate. Thus, with a relatively inexpensive lens, useful pictures can be obtained from scenes having a highlight brightness of less than 5 foot lamberts.

The maximum of the spectral response of the WL-7325 is very near to that of the human eye.

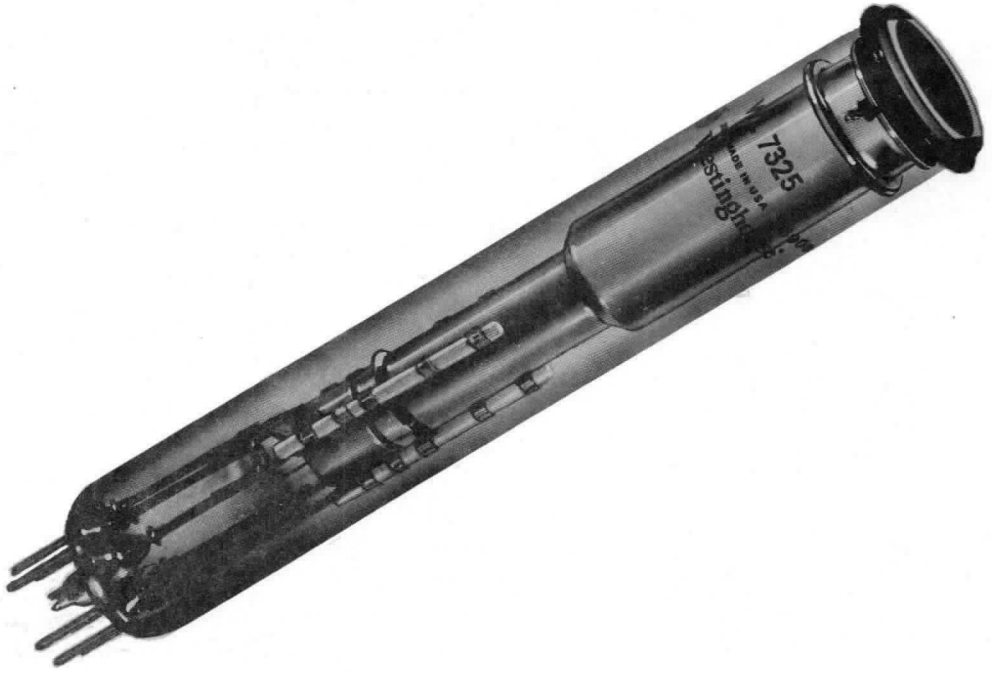

ELECTRICAL:

Cathode	Coated Unipotential	
Heater:		
Voltage (ac or dc)	6.3 ± 10%	Volts
Current	0.6	Ampere
Direct Interelectrode Capacitance:		
Signal Electrode to All Other Electrodes	4.5	μμf
Spectral Response		
Photoconductive Layer:		
Maximum Useful Diagonal of Rectangular Image (4 × 3 Aspect Ratio)	0.62	inch
Orientation of Quality Rectangle	Proper orientation is obtained when the horizontal scan is essentially parallel to the plane passing through the tube axis and short index pin.	
Focusing Method	Magnetic	
Deflection Method	Magnetic	

MECHANICAL:

Overall Length	6-1/4" ± 1/4"
Greatest Diameter	1.125" ± 0.010"
Bulb	T-8
Base	Small-Button Ditetrar 8-Pin (JETEC E8-11
Operating Position	Any
Basing	8HM

MAXIMUM RATINGS:

Absolute Maximum System

Signal-Electrode Voltage	100	max.	Volts
Grids No. 4 & No. 3 Voltage	350	max.	Volts
Grid No. 2 Voltage	350	max.	Volts
Grid No. 1 Voltage:			
Negative Bias Value	125	max.	Volts
Positive Bias Value	0	max.	Volts
Heater-Cathode Voltage:			
Heater Negative with Respect to Cathode	125	max.	Volts
Heater Positive with Respect to Cathode	10	max.	Volts
Faceplate Temperature	71	max.	°C
Faceplate Illumination	500	max.	ft-c

TYPICAL OPERATION AND CHARACTERISTICS:

For Scanned Area of 1/2" × 3/8"

Faceplate Temperature	30 to 35	°C
Faceplate Highlight Illumination	1 to 2.5	ft-c
Signal-Electrode Voltage	10 to 70	Volts
Grid No. 4 (Decelerator) & Grid No. 3 (Beam Focus) Voltage	250	Volts
Grid No. 2 (Accelerator) Voltage	300	Volts
Grid No. 1 Voltage (For Picture Cutoff▲)	-45 to -100	Volts
Signal-Output Current:★		
Normal Operating Range	0.1 to 0.2	μamp
Min., with 0.6 foot-candle of uniform 2870°K tungsten illumination on tube face	0.09	μamp
Dark Current	0.02	μamp
Uniform 2870°K Tungsten Illumination on Tube Face to Produce: Signal-Output Current of 0.1 to 0.2 μamp	1 to 3	ft-c
Average "Gamma" of Transfer Characteristic for Signal Output Current Between 0.1 and 0.3 μamp	0.55	
Minimum Peak-to-Peak Blanking Voltage:		
When Applied to Grid No. 1	40	Volts
When Applied to Cathode	10	Volts
Field Strength at Center of Focusing Device	40	Gausses
Field Strength of Adjustable Alignment Coil	0 to 4	Gausses

▲ With no blanking voltage on Grid No. 1.

★ Defined as the component of the signal-electrode current after the dark current component has been subtracted.

Maximum Sensitivity Operation

For maximum sensitivity the dark current should be increased as far as the quality of the picture permits for the particular operation, subject to the limitations set out in the "Maximum Ratings" above. The following is typical of the operation obtainable under such conditions.

Faceplate illumination	0.1 to 1 ft. candle
Dark Current	0.2 μA
Signal Electrode (Target) Voltage	50 to 80 volts
Signal Output Current	0.08 to 0.2 μA

Average Sensitivity Operation

When viewing scenes of average brightness the WL-7325 is very uncritical in its adjustment and may be adjusted to give the results most desired for the particular type of operation (See operational notes). The following is typical of the operation obtainable under such conditions.

Faceplate illumination	0.5 to 5 ft candle
Dark current	0.01 to 0.02 μA
Signal Electrode (Target) Voltage	20 to 50 volts
Signal Output current	0.08 to 0.3 μA

Minimum Lag Operation

Under conditions of high scene brightness, advantage can be taken of the reduced persistence when operating with low dark currents. The following is typical of the operation obtainable under such conditions. (This refers to continuously illuminated scenes and not to intermittently illuminated film).

Faceplate illumination	2 to 25 ft. candle
Dark Current	.004 μA
Signal Electrode (Target) Voltage	10 to 20 volts
Signal Output Current	0.08 to 0.4 μA

LIGHT TRANSFER CHARACTERISTICS

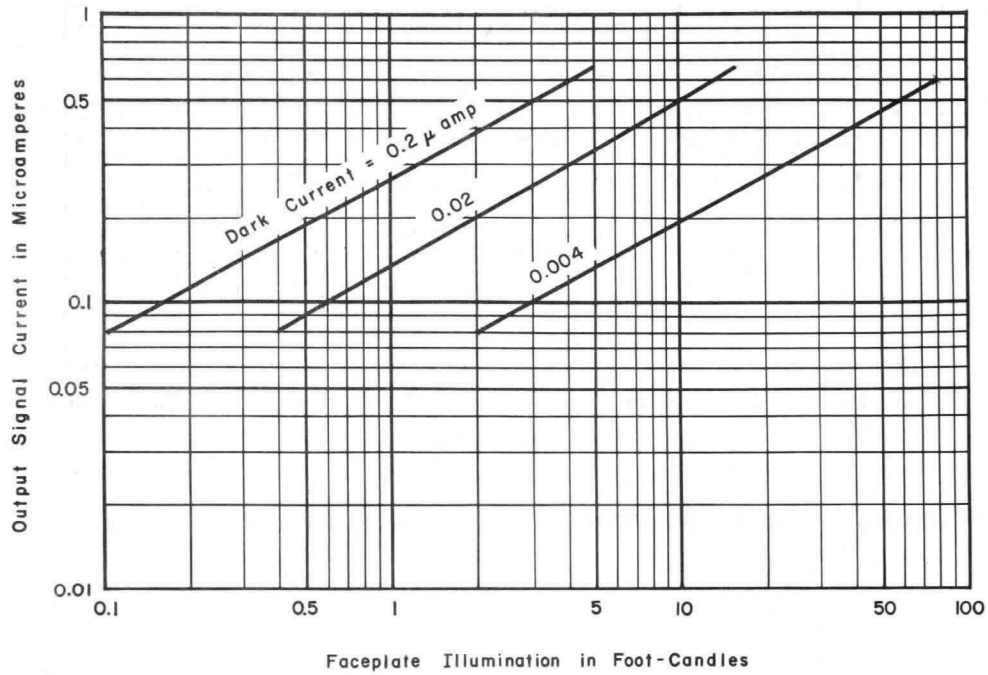

CE-A1457

DARK CURRENT CHARACTERISTICS

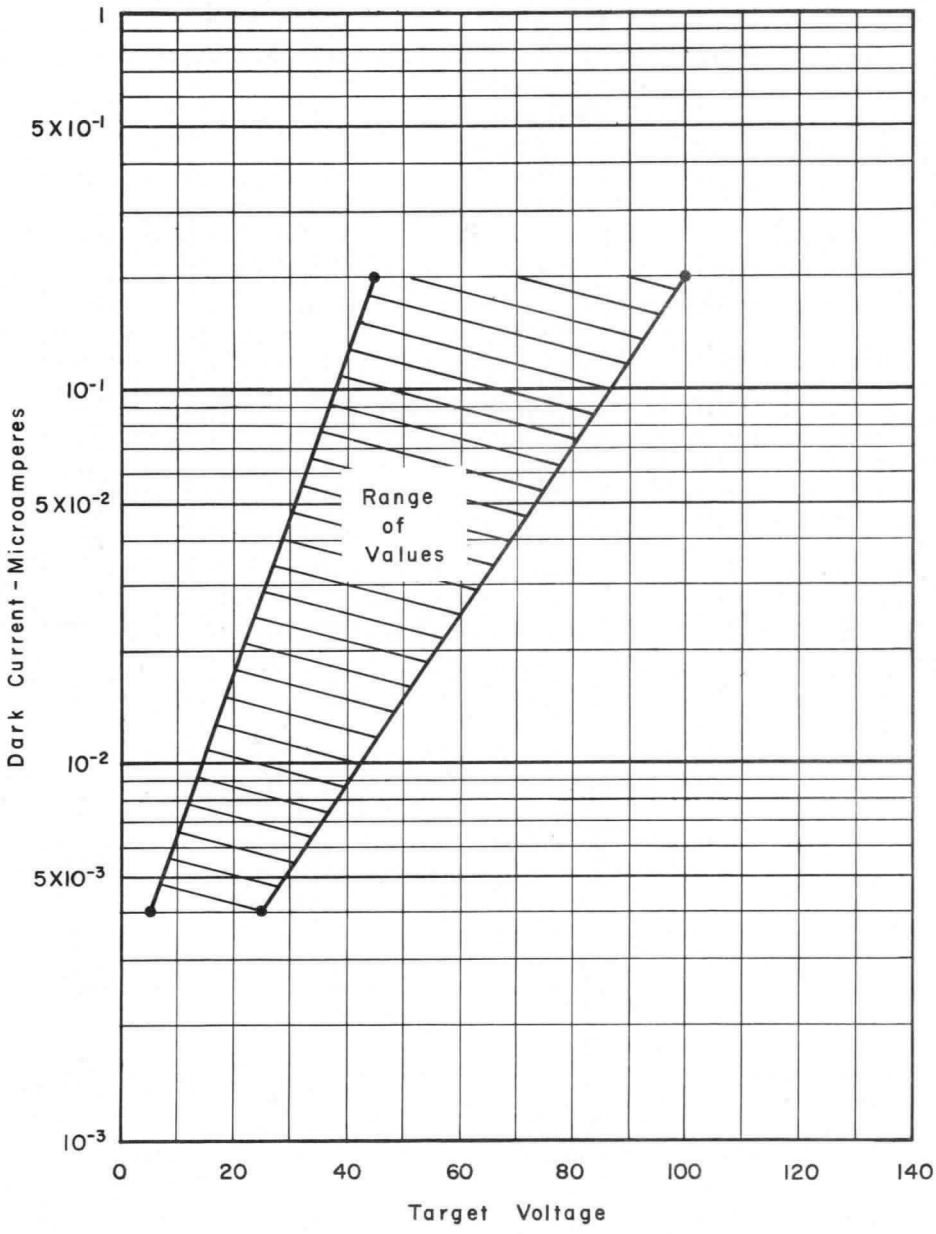

CE-A1458

SPECTRAL RESPONSE CHARACTERISTICS

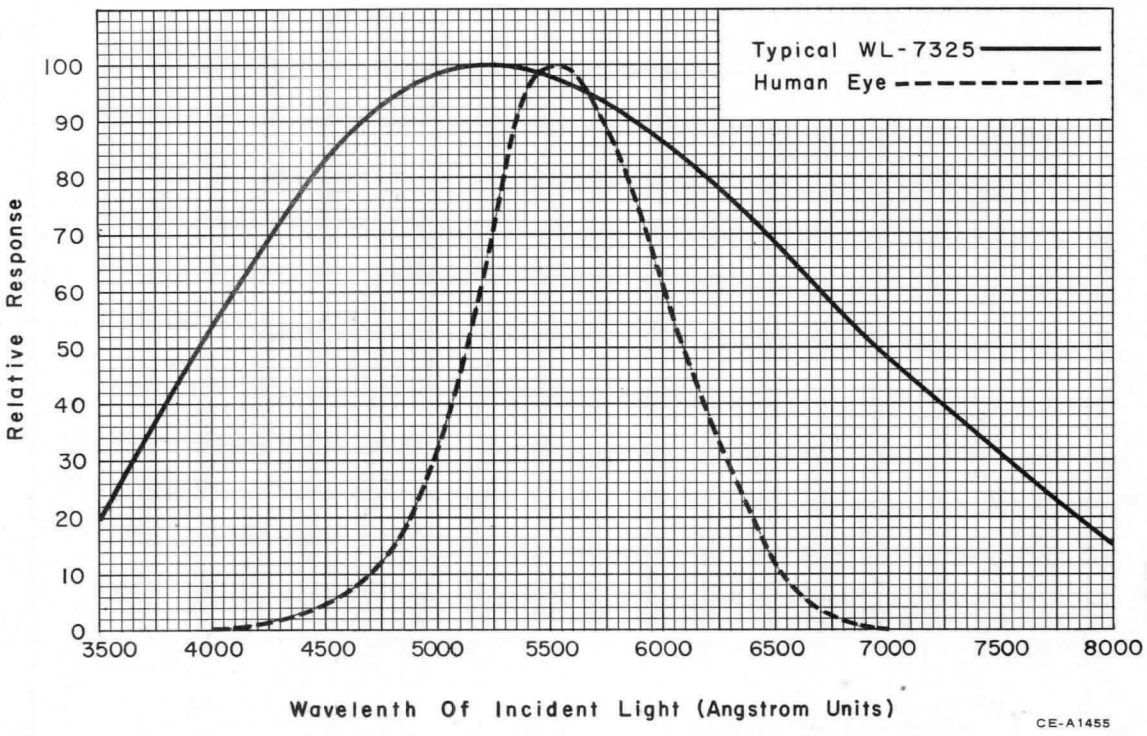

(CROSS SECTION VIEW OF WL-7325)

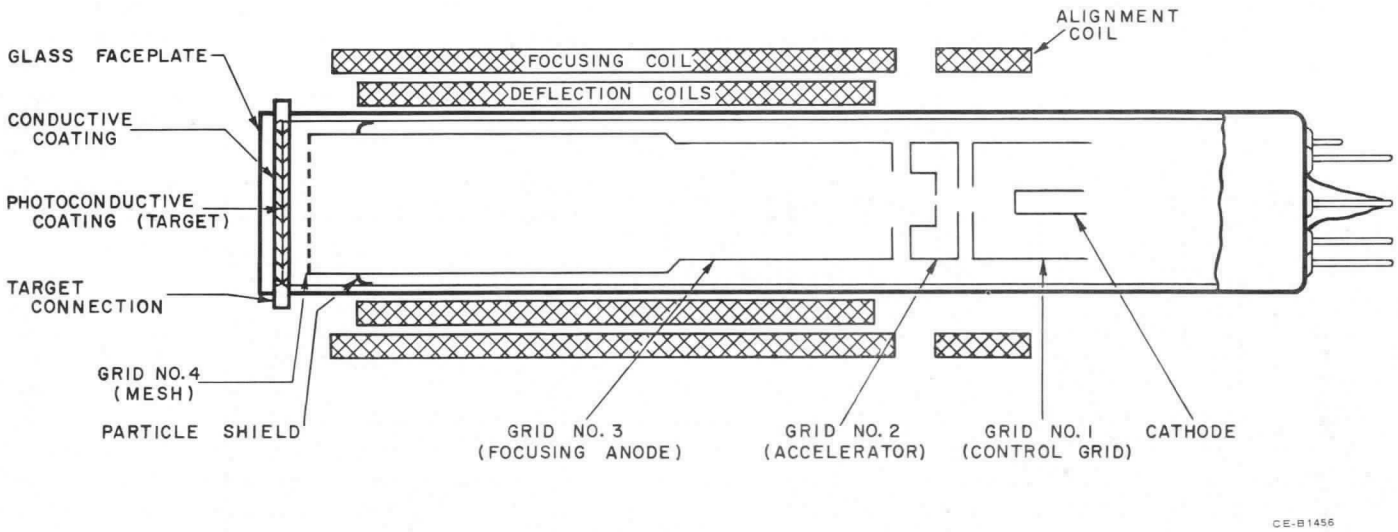

Principles of Operation

The WL-7325 consists basically of an evacuated tube, containing at one end a semi-transparent photoconductive layer. The image of the subject to be televised is focused optically upon this photolayer which is scanned by a low velocity electron beam.

The photolayer consists of an extremely thin film of photoconductive material which is, substantially, an electrical insulator in the dark. When receiving the optical image of the subject each element of the photolayer surface becomes conductive to a degree related to the relative brightness of each corresponding section of the optical image. Each target element therefore, behaves similarly to a charged capacitor with leaky insulation, with one plate at a fixed potential and the other plate 'floating.' This causes the target surface potential to rise toward the signal plate potential to a degree relative to the individual illumination of each picture element.

During the scanning process, the electron beam deposits electrons on the target surface sufficient to return each surface element to cathode potential. This action gives rise to a current flow in the signal plate circuit proportional to the rate of scan and to the surface potential of each individual element undergoing scanning.

The polarity of this signal swings negatively for illuminated areas of the target.

The electron beam is generated by a gun assembly comprising a heated cathode, a control grid (G1) and an accelerating grid (G2). Focusing of the beam is achieved by the magnetic field from an external focusing coil in conjunction with the focusing electrode G3. Routine beam focus adjustments are made by variation of the potential of this electrode.

A fine mesh screen (G4) is internally connected to G3 and is located immediately in front of the scanned surface of the photolayer. G4 operates at the same potential as G3 and this establishes a uniform electrostatic field between the electrode and the photolayer. This field, in conjunction with the uniform magnetic field provided by the focusing coil insures that the scanning beam approaches the photolayer at an angle normal with respect to the target plane, a condition essential for returning the surface elements to cathode potential uniformly.

OPERATING NOTES

The main characteristic of the WL-7325 is its ability to produce satisfactory pictures at levels of scene illumination previously considered below the range of the vidicon. This improvement in low light level operation has been brought about by improvements in three fundamental characteristics of the vidicon, higher sensitivity, better dark current uniformity, and lower "gamma".

Sensitivity

The development of a new photoconductive material for the target of the WL-7325 has resulted in an increase of signal current of about 2 times over the type 6198A at average values of light input and of target dark current.

Dark Current

The effective sensitivity of the vidicon increases with increased dark current as shown in Light Transfer Characteristics curve. The limit to the improvement obtainable in this way is set by the non-uniformity of dark current which becomes more apparent as the target voltage is increased. New techniques in the preparation of target layers have resulted in improved uniformity so that a further gain of about 2 times in signal current can be obtained without limitation due to edge flare and other major non-uniformities.

Gamma

The slope of the curve of output signal against illumination (gamma) is lower than that of the type 6198A. This results in a number of desirable features. It means that the comparative sensitivity gain of the new target is even higher at low light levels. Conversely, the increase in output is lower at high light levels, thus increasing the range of light handling capabilities of the tube, giving a wider contrast range and better gray scale.

Persistence (Lag)

Because the vidicon target layer shows decreased persistence with decreased dark current, the increased sensitivity of the WL-7325 allows operation at lower dark currents at any given light level, thus obtaining less persistence.

Faceplate Temperature

It is recommended that the WL-7325 be operated in such a manner that the faceplate temperature be no higher than 30-35°C. This temperature limitation, which can be met without difficulty in normal installation and operating conditions, is not critical, but there is an increasing degradation in the characteristics of the tube at higher temperatures up to 71°C. Above this temperature, the degradation in performance becomes marked and prolonged operation at such elevated temperatures may result in permanent damage to the vidicon.

General

Advantage may be obtained from the improved characteristics of the WL-7325 in many ways. The benefits of the improvements in sensitivity, dark current uniformity and persistence may be combined in the manner best suited to the requirements of any particular operation so as to obtain better low light sensitivity, less persistence, greater uniformity, greater depth of optical focus field, the use of less expensive lenses of smaller maximum aperture or any desired compromise.

Resolution

The WL-7325 is capable of resolving detail information equivalent to at least 600 TV lines as read on the EIA chart when operated under the recommended conditions. This resolution is more than adequate for broadcast and industrial applications working on normal television standards. Significantly higher resolution can be obtained by modification of the operating conditions. The operating conditions required will vary with the application and, in most cases, modification will also be required in the associated equipment. For further data, write to Westinghouse Electronic Tube Division, Elmira, N.Y. outlining your specific requirements.

8 PIN BASE
JETEC Nº E8-11

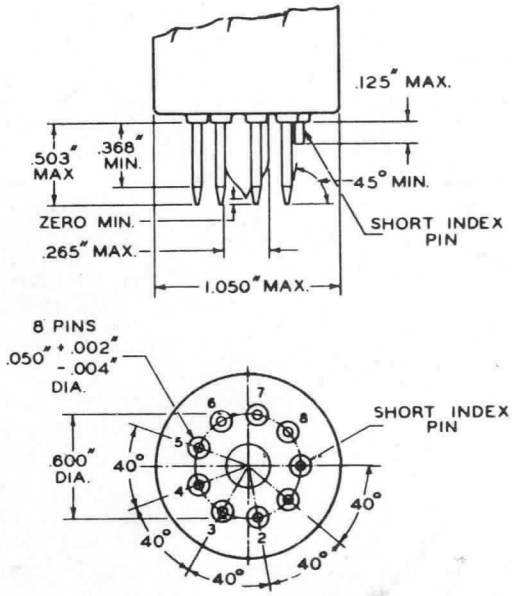

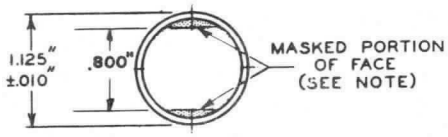

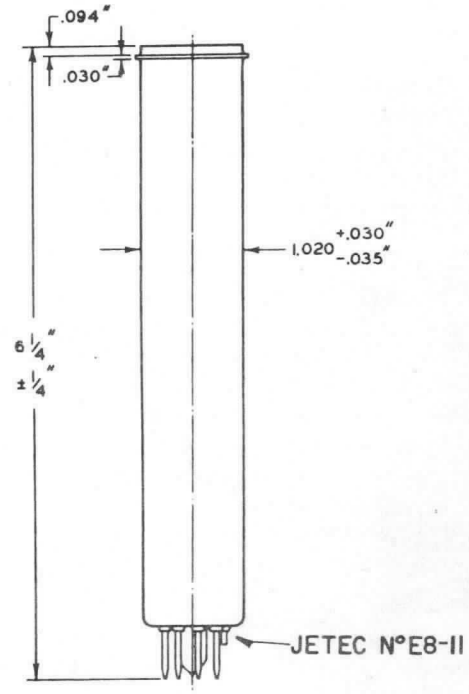

BASE-PIN POSITIONS ARE HELD TO TOLERANCES SUCH THAT PINS WILL FIT A FLAT PLATE GAUGE HAVING THICKNESS OF 1/4" AND 9 HOLES 0.0700" ± 0.0005" SO LOCATED ON A 0.6000" ± 0.0005" DIA. CIRCLE THAT THE DISTANCE ALONG THE CHORD BETWEEN ANY TWO ADJACENT HOLE CENTERS IS 0.2052" ± 0.0005". GAUGE IS PROVIDED WITH CENTER HOLE HAVING DIAMETER OF 0.300" ± 0.001" AND SAME CENTER AS THE PIN CIRCLE.

STRAIGHT SIDES OF MASKED PORTIONS ARE PARALLEL TO PLANE PASSING THROUGH TUBE AXIS AND SHORT INDEX PIN

CE-A1350

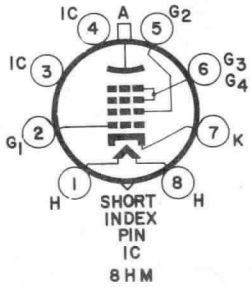

Westinghouse

7356

October 1, 1960

DIRECT VIEW STORAGE TUBE TYPE 7356

Two Identical Write-Erase Guns
Flood Gun
Integral Tube and Shield Assembly
High Speed Selective Erasure

5-1/4" Overall Diameter Including Shield
15-3/4" Overall Length
25 Pin Two-Tier Base
4" Display Diameter

The 7356 is a direct-view storage tube incorporating two identical Write-Erase guns and a Viewing gun system capable of producing a bright, non-flickering, uniform display over a full four inch diameter viewing area. The two electrostatically focused and deflected Write-Erase guns permit independent and simultaneous writing of two signals, or writing with one gun and high speed selective erasure with the other.

Performance characteristics of the tube include a brightness of 2500 foot-lamberts with 10,000 volts applied to the phosphor, good resolution of half-tone displays, and excellent display uniformity. The writing speed of 36,000 inches per second is sufficient to "freeze" high frequency transients, and storage time is long enough to allow adequate examination and recording of the display.

The 7356 is particularly useful for such applications as airborne fire control radar, weather radar, navigational radar, transient studies, data transmission including half-tone storage, telemetering, facsimile, and visual displays requiring steady, narrow-bandwidth transmission over telephone lines.

The 7356 is designed to operate under military environmental conditions. It may be operated unpressurized at high altitudes. The pin connections have been grouped according to operating potentials within a Westinghouse designed Two-Tier 25 Pin Base (JEDEC B25-216) which features unusually long external leakage paths between pin circles. In addition, the base is potted to eliminate internal leakage.

The entire tube is potted within its magnetic shield with a synthetic silicone-rubber material providing protection against mechanical shock, vibration, humidity, and leakage between bulb terminals. The magnetic shield is resistant to salt spray.

The integral tube-and-shield assembly together with the improved base design greatly simplify tube installation procedure.



ELECTRICAL:

Storage:

Type	Half-Tone or Line
Mode	Control of Transmission
Types of Erasure	High Speed Selective or Overall

Write-Erase Guns: (Each Gun)

Cathode			Coated Unipotential	
Heater:	Min.	Bogey	Max.	
Voltage (ac or dc)	5.67	6.3	6.93	Volts
Current at Bogey Voltage	0.50	0.60	0.70	Amperes
Focusing Method			Electrostatic	
Deflection Method			Electrostatic	
Number of Write-Erase Guns			Two	

Flood Gun:

Cathode			Coated Unipotential	
Heater:	Min.	Bogey	Max.	
Voltage	5.67	6.3	6.93	Volts
Current at Bogey Voltage	0.50	0.60	0.70	Ampere
Warm-up Time before Applying High Voltages	30	--	--	Seconds
Focus and Deflection	Undeflected, Collimated "Flood" Gun			

Direct Interelectrode Capacitances:

External Integral Shield Grounded

Write-Erase Gun Cathode to All	7 max.	$\mu\mu f$
Flood Gun Cathode to All	10 max.	$\mu\mu f$
Write-Erase Gun Grid 1 to All	10 max.	$\mu\mu f$
Flood Gun Grid 1 to All	18 max.	$\mu\mu f$
Deflecting Electrode 1 to Deflecting Electrode 2.	3 max.	$\mu\mu f$
Deflecting Electrode 3 to Deflecting Electrode 4.	2 max.	$\mu\mu f$
Deflecting Electrode 1 to All	8 max.	$\mu\mu f$
Deflecting Electrode 2 to All	8 max.	$\mu\mu f$
Deflecting Electrode 3 to All	8 max.	$\mu\mu f$
Deflecting Electrode 4 to All	8 max.	$\mu\mu f$
Backing Electrode to All	110 max.	$\mu\mu f$

OPTICAL:

Phosphor:

Type	High Visual Efficiency, Aluminized P20
Fluorescence	Yellow-Green
Phosphorescence	Yellow-Green
Persistence	Short
Faceplate	Optical Glass, Ground and Polished Flat

MECHANICAL:

Minimum Useful Viewing Diameter	4.0"
Maximum Overall Length	16"
Maximum Seated Length	14-1/4"
Greatest Shield Diameter	5-1/4" ± 1/16"
Viewing Screen Terminal	Flexible Cable
Caps on Large End of Bulb	
Backing Electrode	Recessed Small Ball (JEDEC J1-22)
Collecting Electrode	Recessed Small Ball (JEDEC J1-22)
Collimating Electrode	Recessed Small Ball (JEDEC J1-22)
Base	25 pin Two-Tier Deci-Quindecimal (JEDEC B25-216)
Mounting Position	Any

MAXIMUM RATINGS:

Absolute Maximum Values

WRITE-ERASE GUNS:

(Reference Voltage is Write-Erase Gun Cathode)

Grid 2 & 4 Voltage♦	3700	max.	Volts
With Respect to Flood Gun Cathode	200	max.	Volts
Grid 3 Voltage (Focus)	3000	max.	Volts
Negative with Respect to Flood Gun Cathode	2600	max.	Volts
Grid 1 Voltage:			
Negative Bias Value	150	max.	Volts
Positive Bias Value	0	max.	Volts
Positive Peak Value	2	max.	Volts
Cathode Voltage Negative with Respect to Flood Gun Cathode	3500	max.	Volts
Voltage Between any Deflection Electrode and Grids 2 & 4:♦			
Positive or Negative Peak Value	500	max.	Volts
Peak Heater-Cathode Voltage:			
Heater Positive or Negative with Respect to Cathode	125	max.	Volts

FLOOD GUN:

(Reference Voltage is View Gun Cathode)

Viewing Screen Voltage	11000	max.	Volts
Grid 5 Voltage (Backing Electrode)	35	max.	Volts
Grid 4 Voltage (Collecting Electrode)	300	max.	Volts
Grid 3 Voltage (Collimating Electrode)	300	max.	Volts
Grid 2 Voltage (Accelerating Electrode)♦	200	max.	Volts
Grid 1 Voltage:			
Negative Bias Value	150	max.	Volts
Positive Bias Value	0	max.	Volts
Peak Heater-Cathode Voltage Heater Positive or Negative with Respect to Cathode	125	max.	Volts

LIMITING CIRCUIT VALUES

Viewing Screen Series Current-Limiting Resistance	1.0	min.	Megohm
Backing Electrode Circuit Resistance	5000	max.	Ohms
Collecting Electrode Unbypassed Series Current-Limiting Resistance	22000	min.	Ohms
Grid 1 Circuit Resistance	1.0	max.	Megohm
Resistance in Any Deflecting Electrode Circuit⊕	0.2	max.	Megohm

ENVIRONMENTAL LIMITS

Atmospheric Pressure	60 max. P.S.I.
Altitude (Non-pressurized)	60,000 max. Feet
Temperature:	
Operating	0 to 50 °C
Non-Operating	-55 to 100 °C
Relative Humidity (Non-Operating)	95 Percent

Vibration .... Sinusoidal Vibration from 10 to 50 cycles per second with a total excursion of 0.015 inches and from 50 to 500 cycles per second with 2 g acceleration will not damage the tube.

TYPICAL OPERATING CONDITIONS AND CHARACTERISTICS

Note: Damage to the 7356 may occur if the Write-Erase-Gun beam is turned on before the Flood-Gun-beam current has reached normal operating value or if the Flood-Gun beam is turned off before the Write-Erase-Gun-beam.

Reference Point for DC Voltages is Ground

WRITE-ERASE-GUNS:		
Grids 2 & 4 Voltage♦	50 to 125	Volts
Grid 3 Voltage (Focus):★		
During Writing Operation	-1435 to -1375	Volts
During Selective Erasure	-3150 to -3050	Volts
Grid 1 Voltage to Write-Erase Gun Cathode	0 to -100	Volts
Cathode Voltage:★		
During Writing Operation	-1600	Volts
During Selective Erasure	-3500	Volts
Grids 2 & 4 Current♦	100	μampere
Grid 3 Current (per gun)	-10 to 5	μampere
Cathode Current	See Gun Transfer Characteristic	
Deflection Sensitivity:♦		
Deflecting Electrodes 1 and 2	32 to 40 V dc/In./KV	
Deflecting Electrodes 3 and 4	32 to 40 V dc/In./KV	
Focused Beam Position †	0.5 Inch	

FLOOD GUN:	Range	Typical	
Viewing Screen Voltage	8000 to 11000	10000	Volts
Grid 5 Voltage (Backing Electrode)	-35 to +35	10	Volts
Grid 4 Voltage (Collecting Electrode)	175 to 300	200	Volts
Grid 3 Voltage (Collimating Electrode)	5 to 150	75	Volts
Grid 2 Voltage♦	50 to 125	100	Volts ♦
Grid 1 Voltage	0 to -50	0	Volts
Cathode			Grounded
Viewing Screen Current		250	μamperes
Grid 5 Current (Backing Electrode)		2	μamperes
Grid 4 Current (Collecting Electrode)		1.5	Ma.
Grid 3 Current (Collimating Electrode)		200	μamperes
Cathode Current		2	Ma.

♦ Grids 2 & 4 of both Write-Erase Guns are internally connected together and to Grid 2 of the View Gun.

♦ Deflection Sensitivity is in Volts dc/In./KV of Accelerating Potential.

† With all deflecting electrodes tied to Grids 2 & 4, and erasure at a convenient value the undeflected, focused spots will fall within a circle of 0.5 inch radius, centered on the tube faceplate.

⊕ Approximately equal resistances should be used in each deflecting electrode circuit.

★ The accelerating voltage of the Write-Erase Guns determines their mode of operation. The second crossover potential of a typical tube is in the range from 2000 to 3000 volts. Accelerating voltages exceeding this point result in selective erasure. Writing occurs with voltages lower than second crossover. Optimum-focus voltage will change with changes in the accelerating voltage.

AVERAGE WRITING GUN ANODE TRANSFER CHARACTERISTIC

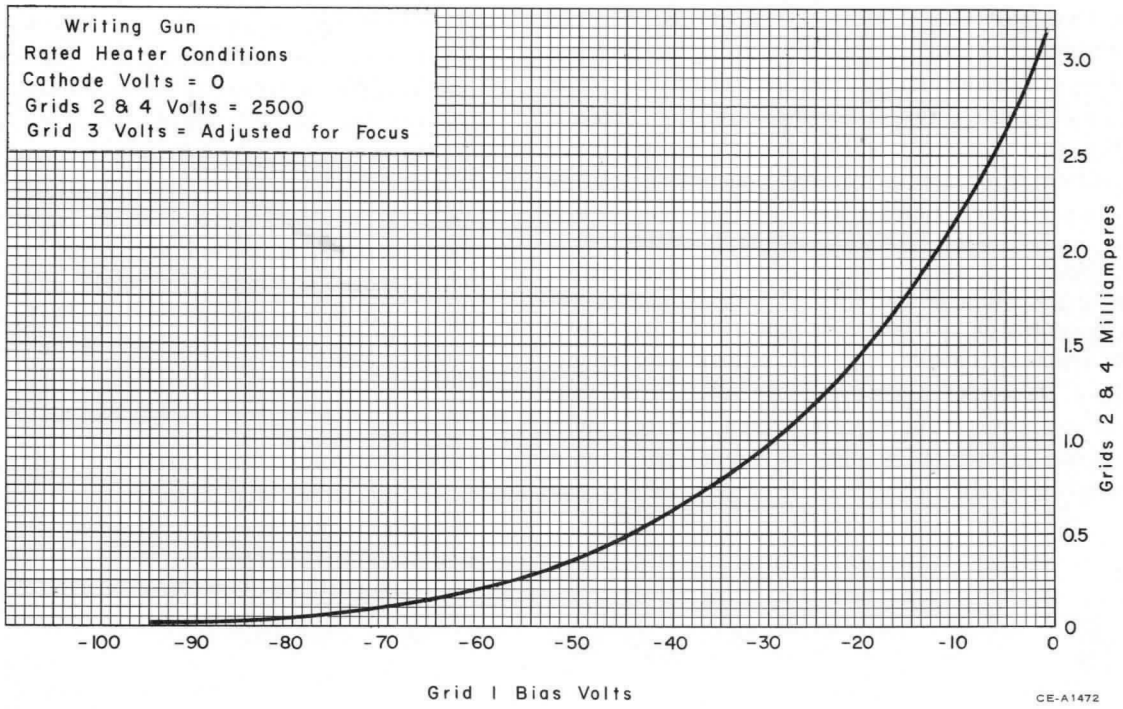

PERFORMANCE DATA

Viewing Time	5	Seconds
Erasing Time (View Gun Erasure)	50	Milliseconds
Erasing Speed (Selective Erasure)	20,000	Inches/Second
Display Uniformity (Δe_p min.)	1	Volt
Writing Speed	36,000	Inches/Second
Half Tones	3	
Brightness (Screen Voltage = 10 KV)	2500	Ft-Lamberts
Contrast Ratio	5	
Resolution	50	Lines/Inch
Grid Drive	30	Volts

Methods of Measuring Tube Performance

Viewing Time: Viewing duration is the time during which the visual output of a storage tube increases from exactly visual extinction to 10% of saturated brightness without the application of a writing signal or erase pulses. The tube shall be primed and then erased to exactly visual extinction. The erase pulses are removed and the screen allowed to increase in brightness. The time interval required for the brightness level at the center of the screen to increase to 10% of saturated brightness is the viewing duration.

Erasing Time: The storage surface is primed. Erasure is produced by a positive rectangular pulse applied to the backing electrode. The amplitude of this pulse is set to one volt above backing electrode cutoff and the pulse width necessary to erase from saturated brightness to 10% of saturation brightness is the erasing time.

Display Uniformity (Δe_p min.): The difference between the amplitude of an erase pulse required to brighten any area of an unwritten screen, and the amplitude of an erase pulse required to evenly illuminate the screen is described as the display uniformity, (Δe_p min.). The erase pulses used for this measurement are positive rectangular pulses adjusted from 2 to 10 volts peak to peak to produce complete erasure in 50 milliseconds.

Writing Speed (Cathode Current): A raster is applied having frequencies and trace length necessary to produce a scanning speed of 36,000 inches per second. The focus electrode is adjusted for best focus at the center of the raster. The tube is erased to cutoff and a single raster is written by applying a rectangular pulse of adjustable amplitude to Grid 1 of the writing gun. The last step is repeated moving the lines of the raster progressively closer together until the individual lines in the written raster cannot be discerned visually. As the lines approach the merging condition, the control grid pulse amplitude is adjusted to give a written raster of 2000 ft-L. When this brightness is achieved and the lines cannot be discerned visually, the condition of the visually limited contrast ratio exists and it is under this condition that the cathode current is measured.

Contrast Ratio: A trace is written to saturation brightness while continuously writing and erasing. Using positive rectangular erase pulses variable from 2 to 10 volts peak-to-peak, the persistence (time required for a written area to be reduced to 10% of saturated brightness) is adjusted to 2 seconds. The ratio of brightnesses in the written and unwritten areas is defined as the contrast ratio. This measurement is made with a maximum ambient brightness of 10 foot-lamberts.

Resolution: A 60 cps sawtooth voltage is applied between deflecting electrodes D_3D_4 and a 2100 to 6300 cps sawtooth voltage is applied between deflecting electrodes D_1 and D_2 giving a raster of approximately 40 lines. Blanking is used to eliminate trace return lines. Trace length shall be adjusted to 3.5 inches. Raster is expanded and number of lines determined. Focus electrode is adjusted for best focus at the center of the raster. Backing electrode is erased to cutoff and G_1, writing gun, is pulsed to write as single raster. Last step is repeated moving the lines progressively closer together until the individual lines in the written raster cannot be discerned visually. As the lines approach the merging condition, the grid pulse amplitude shall be adjusted to give brightness of 1000 ft-L. When the specified brightness is achieved and the lines cannot be discerned visually, the condition for visually limited contrast ratio exists, and the resolution measured at this condition is the limiting resolution. The resolution in lines per inch is the number of horizontal lines counted when the raster was expanded divided by the height of the compressed raster.

Grid Drive: This is the drive required for writing to 90% of saturated brightness with a writing speed of 36,000 inches per second in 1 scan. Note the writing gun drive characteristic. In the useful region, writing speed is proportional to writing current.

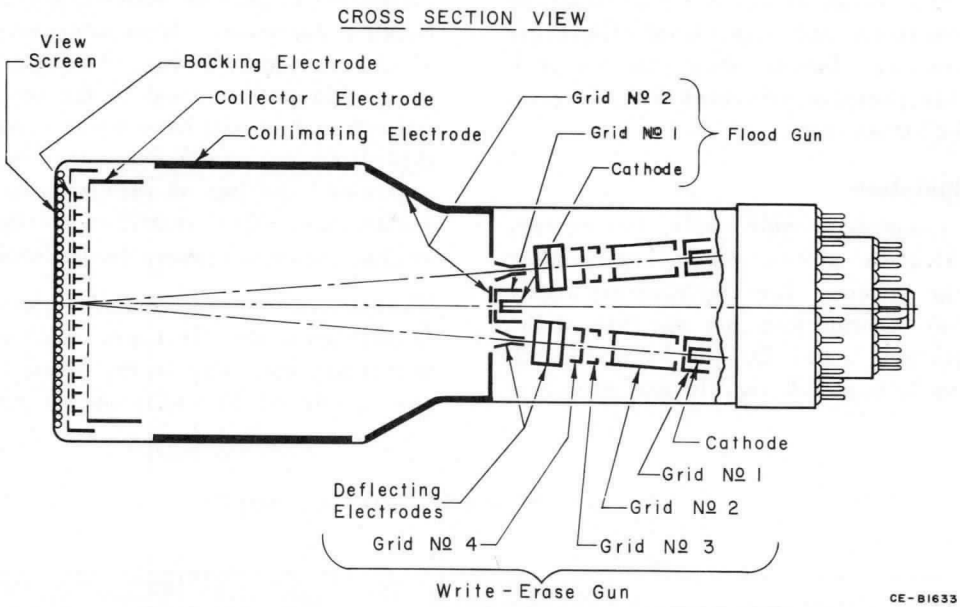

Principles of Operation

The WL-7356 contains, in addition to a phosphor screen and Write-Erase Guns similar to those of conventional cathode-ray tubes, a storage surface, a secondary-electron collector and a Flood Gun with an electron collimating system, all of which can be seen in Cross Section View.

The storage surface is a dielectric material deposited on a fine metallic mesh called the backing electrode. Initially this surface is charged to a uniform potential near the viewing gun cathode voltage. Either or both of the writing guns scan the storage surface and create a charge pattern by secondary emission from the dielectric material. Because this dielectric material is an excellent insulator, the charge pattern does not leak away, but remains for a period of time, as long as a week under non-operating conditions. The secondary electrons liberated from the storage surface are attracted to a collecting mesh.

The reading or flood gun does not scan the screen, but produces a wide-angle beam of electrons which "floods" the entire storage mesh and penetrates through its holes to bombard the phosphor screen. The charge pattern written upon the storage surface controls the viewing gun beam in a manner similar to the control of plate current by the signal applied to the control grid of a triode. In this way the signals applied to the Write-Erase Guns are converted to patterns on the storage surface, and these produce corresponding patterns on the phosphor screen. The penetration of electrons through the storage mesh is proportional to the charge written upon it, hence, intermediate shades of gray or half-tones may be reproduced. Because of the high current density of the flood beam, the high accelerating potential on the screen, and simultaneous bombardment of all portions of the viewing screen, the display is extremely bright.

The Flood Section

The flood section consists of the following elements: a cathode, control grid, accelerating grid, collimating electrode, collecting electrode, backing electrode, and viewing screen.

The cathode is oxide coated and indirectly heated. Grids 1 & 2 are conventional aperture grids and the collimating electrode (Grid 3) is a conductive coating applied to the bulb wall. The collecting electrode (Grid 4) is a fine metallic mesh mounted slightly toward the cathode from the backing electrode.

The backing electrode (Grid 5) is an extremely fine metallic mesh upon which the dielectric or storage material is deposited. This material is on the cathode side of the mesh as shown in Cross Section View.

The viewing screen is an aluminized P20 phosphor having short persistence and high visual efficiency. The Spectral Response Curves show that the peak radiation from this phosphor coincides with the peak sensitivity of the human eye.

The Viewing Operation

The Flood Gun produces a wide angle, low energy, high density electron stream which continuously floods the storage surface. The electrons are highly divergent as they emerge from the aperture of the accelerating electrode (Grid 2), but by proper adjustment of Grids 2, 3, and 4, the electron stream is collimated to provide uniform, normal flooding of the backing electrode. It is necessary that all of the electrons of the viewing beam approach the storage surface in paths normal to the backing electrode in order that they will have equal energy components in this direction. Only under this operating condition will equal charges at various points on the storage surface have equal control of the flood beam. Thus, collimation is necessary for uniformity of display.

The functions of the collecting electrode are several. In addition to its effect upon collimation, it serves to accelerate electrons in the beam; it repels positive ions produced by collisions of electrons with gas

SPECTRAL RESPONSE CHARACTERISTICS

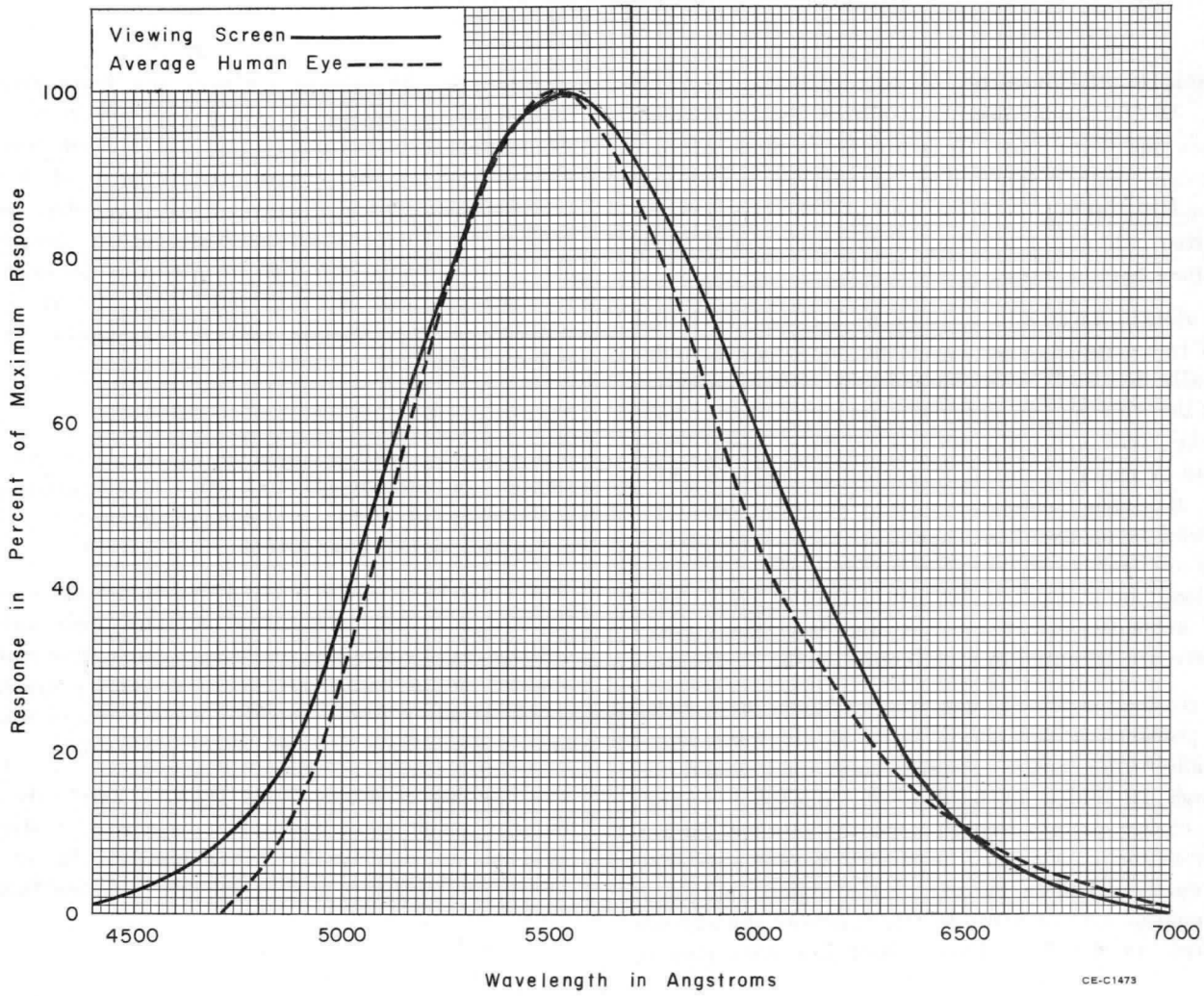

molecules in the region between cathode and collector, thus preventing destruction of the stored pattern by ions; it collects secondary electrons produced when the writing beams impinge upon the storage surface; and it collects viewing beam electrons turned back near the storage surface when its potential is negative.

When the viewing section voltages are applied, some of the flood beam electrons are intercepted by the collector mesh, and others are decelerated to near zero velocity at the storage grid. Their velocity is so low at this point that fewer secondary electrons are emitted than strike the storage surface. Thus electrons accumulate until the potential is approximately the same as the Flood Gun cathode, or zero potential.

At this time when the collimated viewing beam approaches the storage mesh, electrons cannot land upon the storage mesh, but will either return to the more positive collecting electrode or penetrate through the holes of the backing electrode to be accelerated to the phosphor viewing screen producing a bright display. The brightness of the screen under this condition is designated as "saturated brightness". A condition of equilibrium exists, and the storage surface remains charged to approximately zero potential. If the storage surface is made positive by a writing gun or other means, the surface will be immediately restored to zero potential by the viewing gun beam. If, now the backing electrode is suddenly made more positive by several volts, the storage surface will also become positive momentarily because of the very close capacitive coupling between the backing electrode and storage surface, but again the viewing beam will restore the storage surface to zero potential. If next the backing electrode is returned to its original value, the storage surface potential will drop by an equal amount to a negative potential and will retain this charge since viewing beam electrons cannot land. If this negative voltage is great enough, it will cut the viewing beam electrons preventing them from reaching the phosphor and resulting in a dark screen.

The Write-Erase Guns are used to produce a charge pattern upon the storage surface varying in potential from the storage surface cutoff value to zero potential. Since these potentials are at or below viewing gun cathode potential, no viewing beam electrons may land upon the storage surface to destroy the written pattern and it will remain until erased or degraded by positive ions produced by collision of electrons in the viewing beam with residual traces of gas between the viewing screen and collecting electrode.

Without altering its own form the stored charge pattern in thus able to control the electrons impinging upon the screen, producing a bright stored image with full tone range from visual extinction to saturated brightness.

The Write-Erase Guns

The two Write-Erase Guns are of identical design and are similar to those found in electrostatically focused and deflected oscilloscope tubes. They are capable of forming a well defined beam having high current-density resulting in excellent resolution and high writing speed.

Both guns are shown in Cross Section View and each consists of an oxide coated, indirectly heated cathode, a control electrode (Grid 1), two accelerating electrodes (Grids 2 & 4) which are internally connected, a focusing electrode (Grid 3); and horizontal and vertical deflection plates.

The Writing Operation

The Write-Erase Guns are generally operated with the cathode at -2400 volts with respect to the Flood Gun cathode. At this potential the electrons from the writing beam have sufficient energy to cause the secondary-emission ratio at the storage surface to be greater than unity. Thus, since more electrons are leaving the storage surface than are arriving, the surface assumes a less-negative potential whenever the beam strikes. Since the secondaries are attracted to the positive collecting electrode it would appear that the writing beam could charge the storage surface to collecting-electrode potential, but in practice the viewing beam lands upon the surface whenever it tends to become positive and returns it to approximately viewing-gun cathode potential.

The writing-beam electrons striking the storage surface can then result in potentials varying from storage-grid-cutoff voltage to approximately zero potential. The storage-surface potential is controlled over this range by the amplitude and duration of the writing-beam current which is determined by the signal applied to the control grid.

As was described previously, the potential at any point on the storage surface determines the number of viewing-beam electrons passing through the storage-mesh holes in that immediate vicinity. When any point is sufficiently positive to allow passage of electrons, they will be accelerated by the high viewing- screen potential and strike the phosphor directly opposite that point. The result is a bright spot on the viewing screen having a size only slightly larger than that of the corresponding point where the writing beam struck the storage surface. The brightness of this spot is directly proportional to the density and velocity of the electrons landing on the element, the density being determined by the elemental changes of the storage surface, and the velocity by the potential of the viewing screen.

The image brightness may be varied by adjusting the screen potential, but because the screen is aluminized, the light output decreases rapidly below 5000 volts. Operation below this value is not recommended.

The Erasing Operations

Flood Gun Erasure (Overall)

A method of preparing the storage surface for the writing operation has already been described under The Viewing Operation. This technique, which involves charging the storage surface to a negative value by the momentary application of a positive potential to the backing electrode, is actually an erasing method known as static erasure.

Static Erasure

During the application of the positive potential to the backing electrode, viewing-beam electrons land on the storage surface and drive it uniformly to cathode potential thus erasing any stored information.

A disadvantage of this method is that during erasure and subsequent re-writing no information or only incomplete information is displayed. Also the entire screen is illuminated to the saturation-brightness level or higher during erasure.

Dynamic Erasure

In most applications it is desirable to present a display which gradually decays after a given interval of time. This type of operation may be obtained by applying a continuous series of positive pulses to the backing electrode at a rate sufficiently fast to prevent visible phosphor flicker. The technique of applying a series of pulses to the backing electrode is known as dynamic erasure.

The amount of charge erased during each erase pulse depends upon pulse duration, shape and amplitude. These factors together with erasing-pulse repetition frequency determine the rate at which the observed display decays.

If the erasing pulses are smaller in amplitude than the viewing-beam cutoff voltage, erasure will not be complete, whereas if the pulses are greater than cutoff they will eventually drive the storage surface below cutoff or "blacker than black". Therefore it is not advisable to use erase pulse amplitude as a means of adjusting erasing time.

When a rectangular erasing pulse is used, all portions of the storage surface will simultaneously become positive with respect to the viewing-gun cathode and viewing-beam electrons will be deposited at nearly the same rate over the entire surface regardless of initial charge. Thus charges representing the brighter elements will remain after other elements have been erased and the brighter areas will be visible for a longer period than the darker areas.

If a positive-going sawtooth erasing pulse is used, the least-negative storage elements will reach cathode potential before the remaining elements, thus allowing viewing-beam electrons to land on elements representing brighter areas for a longer period than on those representing darker areas. With this type of proportional erasure, half-tones will persist as long as bright areas.

For applications involving half-tone display, the rectangular erase pulses should be adjusted in amplitude so that the storage surface is charged to exactly cutoff potential by the erasing operation.

For applications such as radar, where noise must be suppressed, a more positive erase pulse may be used to drive the storage surface several volts below cutoff. The writing beam must then scan the surface several times to bring the written elements above cutoff.

If possible the erase-pulse amplitude should be adjusted so that the noise component of the writing gun signal is just sufficient to bring the storage surface to cutoff. The signal above this level will than allow

viewing-beam electrons to produce a display representing that signal without any noise background.

Write-Erase Gun-Erasure (High Speed Selective)

It is often advantageous to erase a specific part of the stored signal without erasing other parts. As the total electron-volt energy of the beam increases from zero volts, the secondary-emission ratio first decreases then increases to a maximum value, substantially greater than unity. This maximum usually

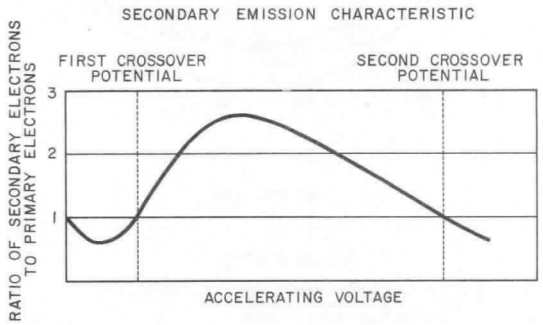

occurs at 1200 volts for the 7356. In the interest of better resolution, operation of the writing gun at 1600 volts is recommended. As the voltage of the electron beam increases further, the secondary emission ratio goes below unity, and it becomes possible to use the beam for selective erasure. With the 7356 selective erasure of reasonable speed usually occurs at a voltage of the order of 2400 volts. This high velocity erase mode has many advantages. The erase beam has high resolution resulting in much greater selectivity. The erase beam is also capable of much greater density. The greater beam density results in a faster erasing speed, and also results in substantially less interaction between guns used simultaneously in the write or erase modes.

A serious drawback of a low-velocity-erase system is the effect of the collimating optics of the flood gun on the erase beam. Since the erase beam is of the same order of velocity as the flood beam in this system, the collimating optics of the flood gun converge not only the flood beam, but also the erase beam. The erase beam tends to be deflected toward the center of the tube by the collimating lenses. Consequently, a low velocity erase beam is very difficult to control and has serious non-uniformities in deflection linearity.

Since the 7356 utilizes a selective erase system with a high-velocity beam, it is essentially free from distortions of the type described above. The 7356 may be employed as a direct view storage tube with two separately focused and deflected writing guns. Simply by rasing the potential of one of the writing guns, the tube becomes a direct view storage tube with high selectivity and speed of erasure.

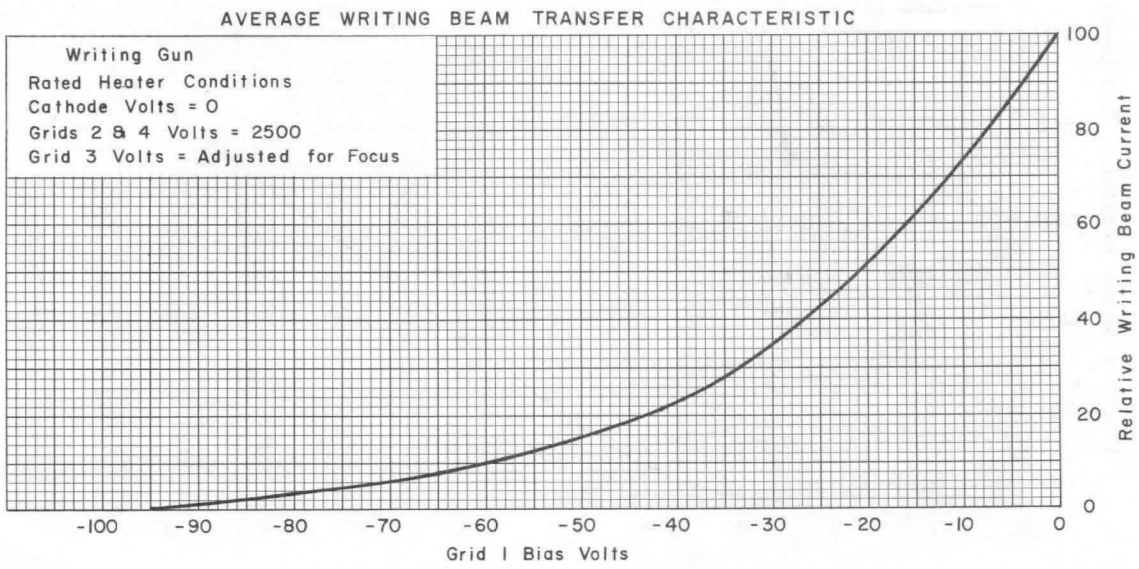

CE-A1471 R1

INDEX of TERMINALS

Pin No.	Gun	Element
1	Write-Erase (2)	Deflection Electrode 2
2	Write-Erase (2)	Deflection Electrode 1
3	Write-Erase (2)	Deflection Electrode 3
4	Write-Erase (2)	Deflection Electrode 4
5	External Integral Magnetic Shield	
6	Flood	Grid 1
7	Flood	Cathode
8	Flood	Heater
9	Flood	Heater
10	Write-Erase (1 & 2)	Grids 2 & 4
	Flood	Grid 2
11	Write-Erase (1)	Deflection Electrode 4
12	Write-Erase (1)	Deflection Electrode 3
13	Write-Erase (1)	Deflection Electrode 2
14	Write-Erase (1)	Deflection Electrode 1
15	No Connection (Do NOT Use)	
16	Write-Erase (2)	Heater
17	Write-Erase (2)	Grid 1
18	Write-Erase (2)	Heater
19	Write-Erase (2)	Grid 3
20	Write-Erase (2)	Cathode
21	Write-Erase (1)	Heater
22	Write-Erase (1)	Grid 1
23	Write-Erase (1)	Heater
24	Write-Erase (1)	Grid 3
25	Write-Erase (1)	Cathode

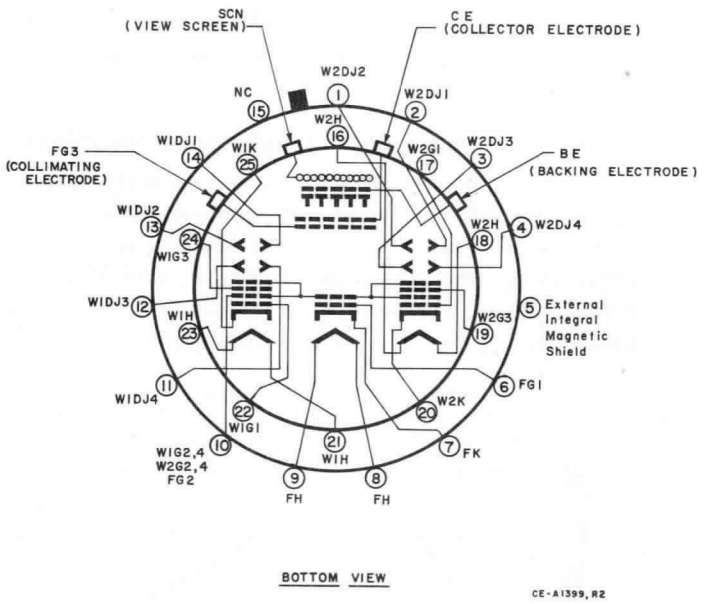

BULB CAPS

Flood Grid 3 (Collimating Electrode)
Collection Electrode
Backing Electrode
View Screen

Note: Write-Erase guns 1 & 2 are identical. Either may be used for writing or selective erasure.

SCREEN BRIGHTNESS AS A FUNCTION OF SCREEN POTENTIAL

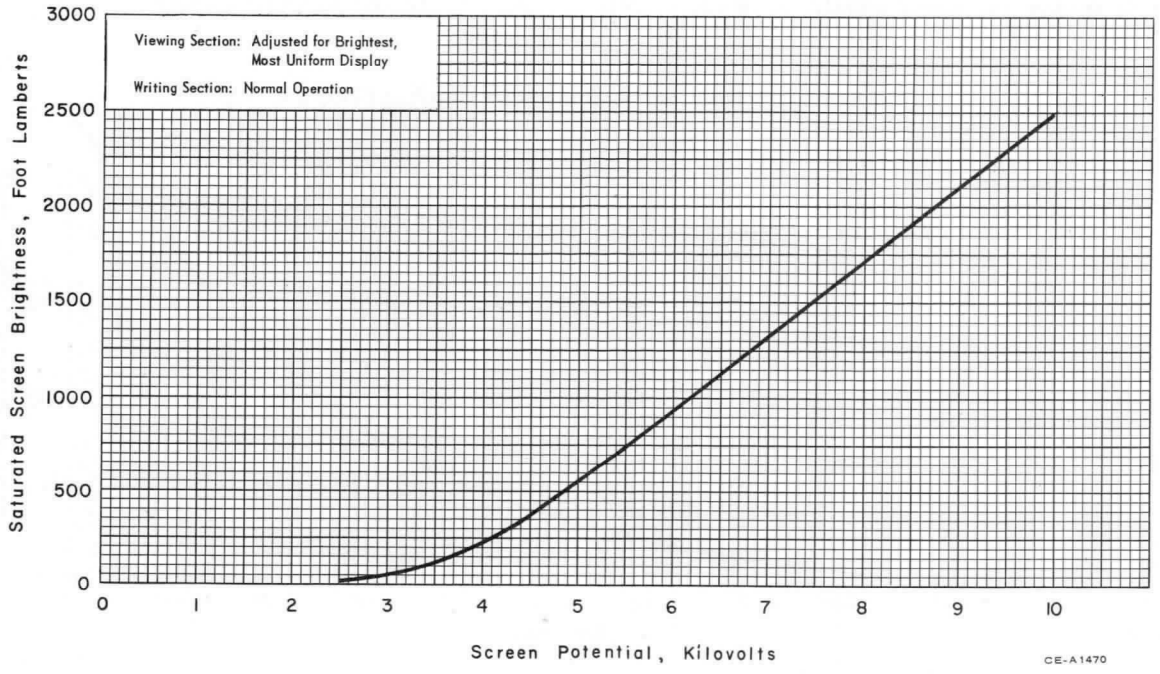

OUTLINE DRAWING

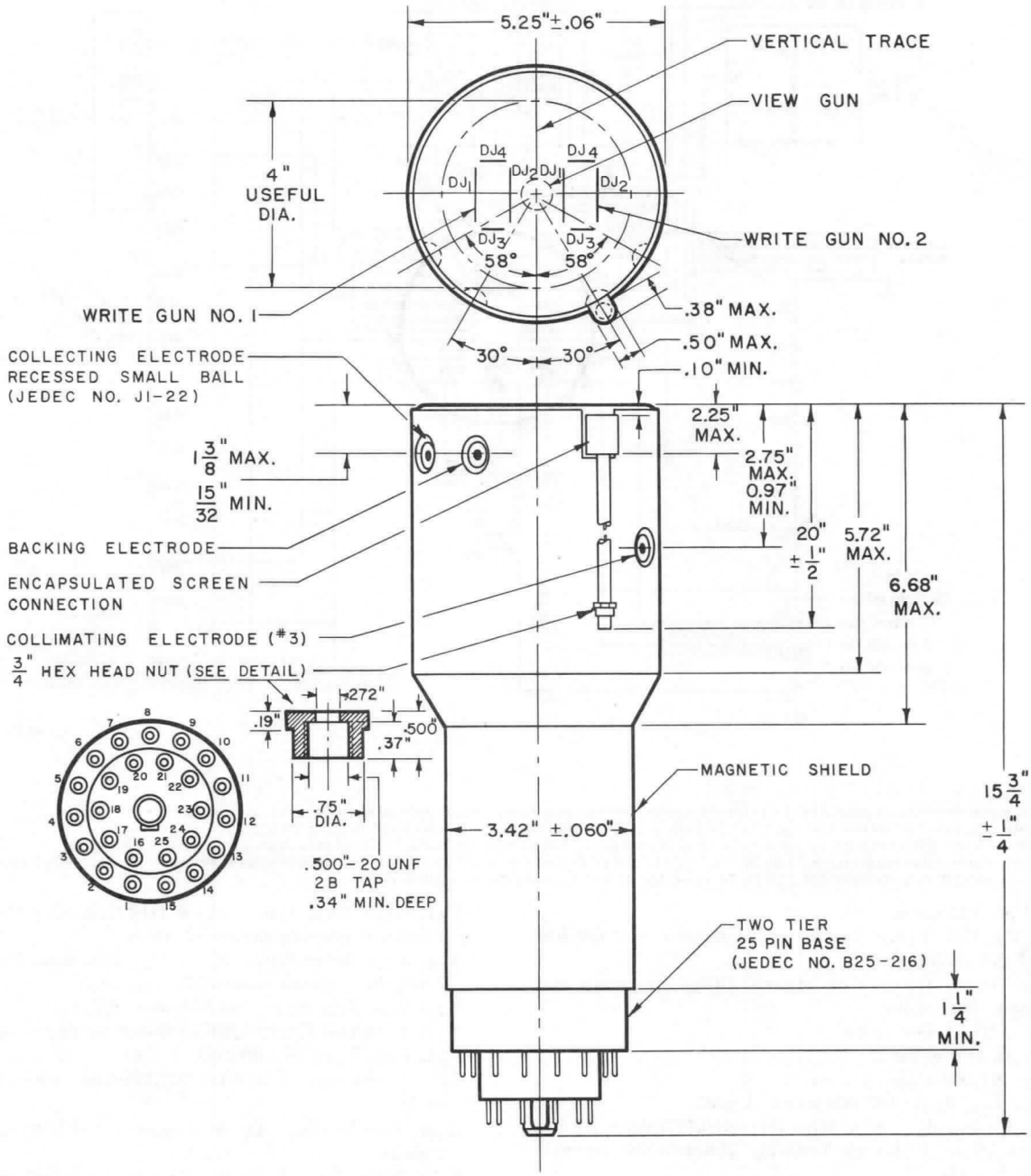

NOTES:

1. CENTERLINE OF BULB AXIS TO BE NOT MORE THAN 3° FROM A PERPENDICULAR ERECTED AT CENTER OF FACEPLATE.
2. FACEPLATE TO BE EVEN WITH SHIELD EDGE OR EXTEND BEYOND SHIELD BY LESS THAN 1/16".

CE-C1483

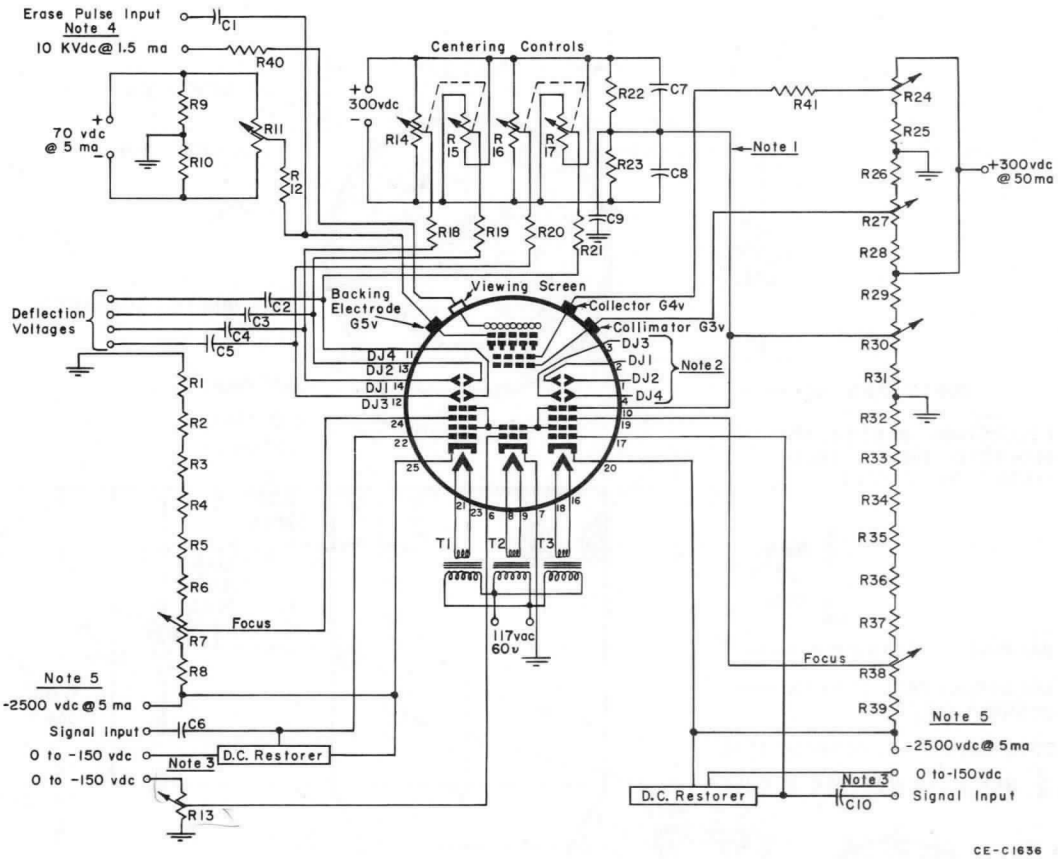

Note 1: The mean deflection potential is referred to the writing gun final anode potential to prevent astigmatism.
Note 2: Centering and deflection circuitry for Writing Gun 2 is similar to that shown for Writing Gun 1.
Note 3: Voltages are with respect to each writing gun cathode. Entire supply must be insulated from ground for 4000 volts.
Note 4: Erase Pulse Characteristics, Amplitude: 0 to 10 volts peak-to-peak, Width: 2 to 10 microseconds, Frequency: 0 to 1000 pulses per second
Note 5: Power supply requirement for gun to be used for selective erasure is −3000 volts.

C_1: 0.1 μf, 200 volts
C_2, C_3, C_4, C_5: Value depends on deflection-voltage frequency and waveform
C_6, C_{10}: Value depends on signal-voltage frequency and waveform, 4000 volts
C_7, C_8: 0.05 μf, 600 volts
C_9: 0.5 μf, 600 volts
R_1, R_{32}: 91,000 ohms, 1 watt
R_2, R_{25}, R_{29}, R_{33}: 100,000 ohms, 1 watt
R_3, R_4, R_5, R_6, R_{34}, R_{35}, R_{36}, R_{37}: 470,000 ohms, 2 watts
R_7: Write Gun 1 Focus Control, 250,000-ohm potentiometer, 2 watts
R_8, R_{39}: 180,000 ohm, 1 watt
R_9, R_{10}, R_{22}, R_{23}: 1 megohm, 0.5 watt
R_{11}: Backing Electrode Control 100,000-ohm potentiometer, 2 watts
R_{12}: 5,000 ohm, 1 watt
R_{13}: View Gun Grid 1 Control, 250,000-ohm potentiometer 2 watts
R_{14}, R_{15}: Write Gun 1 DJ_1 & DJ_2 Centering Controls Dual 1 megohm potentiometers, 2 watts
R_{16}, R_{17}: Write Gun 1 DJ_3 & DJ_4 Centering Controls Dual 1 megohm potentiometers, 2 watts
R_{18}, R_{19}, R_{20}, R_{21}: 100,000 ohm, 0.5 watt
R_{24}: Collector Control, 200,000-ohm potentiometer, 2 watts
R_{26}, R_{28}, R_{31}: 51,000 ohm, 1 watt
R_{27}: Collimator Control, 200,000-ohm potentiometer, 2 watts
R_{30}: Accelerating Anode Control, 150,000 ohm potenti- 2 watts
R_{38}: Write Gun 2 Focus Control, 250,000-ohm potentiometer, 2 watts
R_{40}: 1 megohm, 5 watts
R_{41}: 22,000 ohm, 1 watt
T_1, T_3: Filament Transformer Primary 117 volts, Secondary 6.3 volts @ 1 ampere Insulated for 4000 volts
T_2: Filament Transformer Primary 117 volts, Secondary 6.3 volts @ 1 ampere.

The information contained herein is furnished without assuming any obligations. The description and illustration of circuits herein does not convey to the purchaser of tubes any license for circuits under the patent claims of Westinghouse Electric Corporation or others.

PICKUP-STORAGE TUBE TYPE-7383
(PERMACHON)

The 7383 is a 1" pickup-storage tube designed for high resolution, long storage continuous readout applications. Storage is excellent both in terms of resolution and duration of the stored image. The 7383 can be operated in a standard vidicon camera (with modifications) and offers a gray scale rendition comparable to conventional pickup tubes. The tube possesses signal integrating properties. It is convenient for many practical purposes to regard the tube as a sensitive photographic film in determining the exposure time of the scene whose image is to be stored. The tube when allowed to view at very low light levels offers a noticeable improvement on the performance of the human eye.

The Permachon may also be used in reduced-bandwidth-transmission applications not requiring storage by employing scan frame times of approximately 25 seconds. Slow scan operation can only be achieved by maintaining continuous, stationary, light-information on the input during readout. No integration of information occurs during this mode of operation.

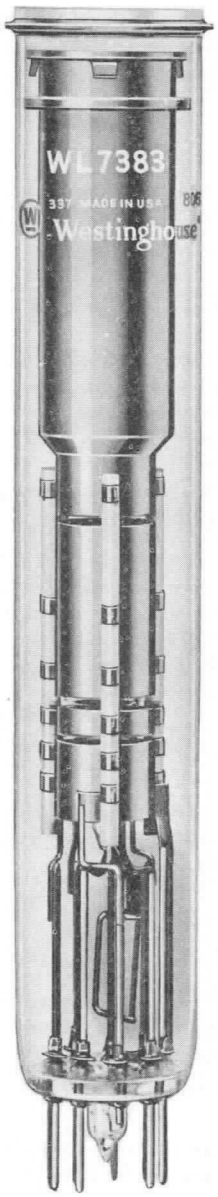

ACTUAL SIZE

ELECTRICAL:

Cathode	Coated Unipotential
Heater:	
Voltage (ac or dc)	6.3 ± 10% Volts
Current	0.6 Ampere
Direct Interelectrode Capacitance:	
Signal Electrode to all other Electrodes	4.5 $\mu\mu f$
Spectral Response	from 3000 to 7000 Angstroms
Photoconductive Layer:	
Orientation of Tube to Scan	Proper orientation is obtained when the horizontal scan is essentially parallel to the plane passing through the tube axis and short index pin.
Focus Method	Magnetic
Deflection Method	Magnetic

MECHANICAL:

Overall Length	6-1/4" ± 1/4"
Greatest Diameter	1.125" ± 0.010"
Bulb	T-8
Base	Small-Button, 8-Pin (JETEC E8-11)
Operating Position	Any

MAXIMUM RATINGS:

Absolute Maximum System

Signal-Electrode Voltage	15 max. Volts
Grids 4 & 5 Voltage	350 max. Volts
Grid 3 Voltage	350 max. Volts
Grid 2 Voltage	350 max. Volts
Grid 1 Voltage:	
Negative Bias Value	125 max. Volts
Positive Bias Value	0 max. Volts
Heater-Cathode Voltage:	
Heater Negative with Respect to Cathode	125 max. Volts
Heater Positive with Respect to Cathode	10 max. Volts
Ambient Temperature	45 max. °C

TYPICAL OPERATION AND CHARACTERISTICS:

For Scanned Area of 1/2" × 3/8"		
Signal-Electrode Voltage▲	6 to 14	Volts
Grid No.4 (Decelerator) & Grid No.3 & Grid 5 (Beam Focus) Voltage	250	Volts
Grid 2 (Accelerator) Voltage	300	Volts
Grid 1 Voltage: (For Picture Cutoff)□	-45 to -100	Volts
Dark Current†	0.1 - 0.7	μampere
Initial Signal Current♦	0.3 - 1.0	μampere
Holding Signal Current♦	0.2 - 0.9	μampere
Min. Peak-to-Peak Blanking Voltage: §		
When Applied to Grid 1	40	Volts
When Applied to Cathode	10	Volts
Field Strength at Center of Focusing Device	40	Gausses
Field Strength of Adjustable Alignment Coil	0 to 4	Gausses
Approx. Storage Time: ▲		
600 TV Line Resolution⊕	5	Minutes
450 TV Line Resolution⊕	10	Minutes
Sensitivity■		

▲ Optimum storage is achieved by operating about 12 volts. Storage time is decreased as signal electrode voltage is decreased.

□ With no blanking voltage on Grid 1.

† For signal electrode voltages from 6 to 14 volts, and after integration.

♦ Holding signal current, obtained during read-out, will normally be less than initial signal current, obtained during write (optical input). For 0.6 foot-candle faceplate illumination during write initial signal current varies from 0.3 to 1.0 μa and holding signal current from 0.2 to 0.9 μa as target voltage is varied from 6 to 14 volts. However, after integration holding signal current approaches initial signal current.

§ The target voltage, measured with respect to ground, will vary with type of blanking used. If cathode blanking is used in the camera, the higher DC cathode impedance will provide a lower cathode to target potential or effective target potential. Dark current and signal current are high in the permachon compared to a vidicon. With cathode blanking used in a standard camera it is often possible to cut off the Permachon when grid bias is set too low. Under these conditions, no picture would be obtained regardless of target voltage setting.

For this reason, grid blanking is recommended. It is possible to operate with cathode blanking but then grid bias and target voltage settings are more critical.

⊕ Number of lines just resolvable, in vertical wedge of EIA chart imaged on 1/2" × 3/8" scanned area, while displayed on a monitor which does not limit resolution.

■ The sensitivity of the Permachon is such that with 19 foot-candles illumination on the faceplate, saturation is reached in less than 10 milliseconds exposure time. With 1.9 foot-candles the necessary exposure time is 0.5 seconds and with 0.19 foot-candles, it is 2.6 seconds.

With exposure times of approximately 10 milliseconds, the contrast of the stored image is somewhat less than normal. Shorter exposure times will result in saturation using higher light intensities with significant loss of contrast of the stored image.

EQUIPMENT DESIGN NOTES

The camera housing should incorporate features not usually found in TV cameras. The camera housing should be light tight. The most convenient place to install the erasing light source may be within the camera housing. Considering the Permachon as photographic film, provision must be made for intermittant exposure during writing times and complete light cutoff during readout.

If the apparent storage of the Permachon is shorter than normal, this may be due to either equipment limitations, which may be corrected, or, to improper mode of operation.

Equipment design factors which can result in apparent low storage include target voltage supply impedance and excessive temperature. Any high impedance in series with the target load (usually 50K approx.) should be removed from the circuit. Such an impedance will result in undesirable target voltage limiting. Automatic target voltage adjustment circuits should also be removed or disabled. Overheating of the Permachon can result in loss of storage. The associated circuitry should be heat shielded such that the ambient temperature around the Permachon does not exceed 45 °C.

The high output signal from the Permachon can result in amplifier overload in commercial vidicon cameras. Reduction of target load impedance is one possible way of preventing amplifier overload but results in a degradation of signal-to-noise ratio. A more satisfactory solution is to reduce the gain of the system or inject the signal after the very-low-level preamplifier stage. The method used will depend on where, in the amplifier, the overload is taking place.

PERFORMANCE NOTES

Storage Time: Operating conditions may be selected to vary the storage time from less than one second to more than 10 minutes with continuous electrical readout. Using standard television scan rates, 4×10^4 electrical images may be taken from a single exposure. Toward the end of the longer storage times, a slight decrease in contrast and apparent resolution is noticeable. Resolution of 600 TV lines with 8 shades of gray can be maintained for approximately 5 minutes.

The degradation of stored display which initially occurs appears as a loss of contrast, with black areas turning to white rather than a worsening of resolution.

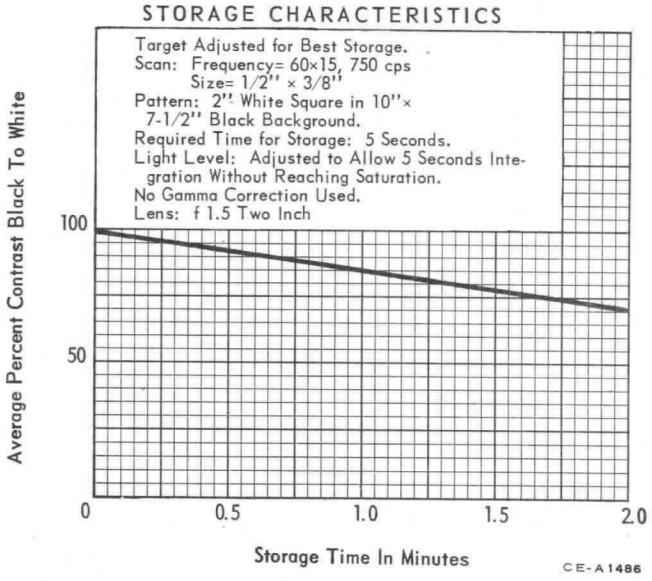

Resolution: As was stated under Storage Time, a usable resolution of 600 TV lines is obtainable. Significantly higher resolution can be obtained by increasing accelerator potential and focus field. The operating conditions required will vary with the application. Modification of associated equipment will usually be required. For further data, write to Westinghouse Electronic Tube Division, Sales Dept., Elmira, N.Y. outlining your specific requirements.

SET UP INSTRUCTIONS

The following notes are given to aid in the setting up of the tube and to advise of some unusual precautions which must be taken.

1. With shutter open, adjust deflection to obtain proper scan size.
   A standard 6198A or 6326A may be used for this adjustment.
2. Adjust target to 6 volts.
3. A f 1.5 - 2 inch lens is satisfactory.
4. Close shutter.
5. Adjust grid one control in a more positive direction until target is charged. A wiping effect is noted when charged condition is reached.
6. Adjust alignment to obtain best uniformity of landing.
7. Scene brightness need not exceed 5 foot candles.
8. Stop lens to approximately f 8 and open shutter.
9. If highlights go negative as observed on a monitor, adjust grid one for increase in beam current.
   The scene illumination and exposure time will determine the lens stop.
10. Focus optically and electrically, erasing as often as necessary.
11. To erase:
    (a) Shut off beam and remove lens.
    (b) Flash target with light of at least 20 foot candles.
12. Replace lens and turn up beam.
13. Open diaphragm until desired contrast is obtained on monitor.
14. Close shutter - - picture should be stored.

The optimum target voltage will vary from tube to tube. If not adjusted properly a short storage or poor contrast picture is possible. If storage is short, increase target voltage to a maximum of 15 volts.

Erasure: There are two ways in which erasure can be accomplished:

1. The face of the tube is flooded uniformly with light. This process may be carried out in less then a second with about 20 foot candles or with a single intense flash of approximately 5×10^{-4} seconds duration. Associated with this method, which finds the most general application, is the need to allow time for priming the storage layer after erasure and before the next exposure to visual information. Five frames of normal television scanning are sufficient for this priming action. Thus, the process of erasure and priming together need not occupy more than about 1/5 of a second. Complete erasure is obtained if the electron beam is blanked off during the light pulse.

2. The information may be erased by switching off the beam. This method may, however, occupy 5 to 10 seconds.

AVERAGE DARK CURRENT CHARACTERISTIC

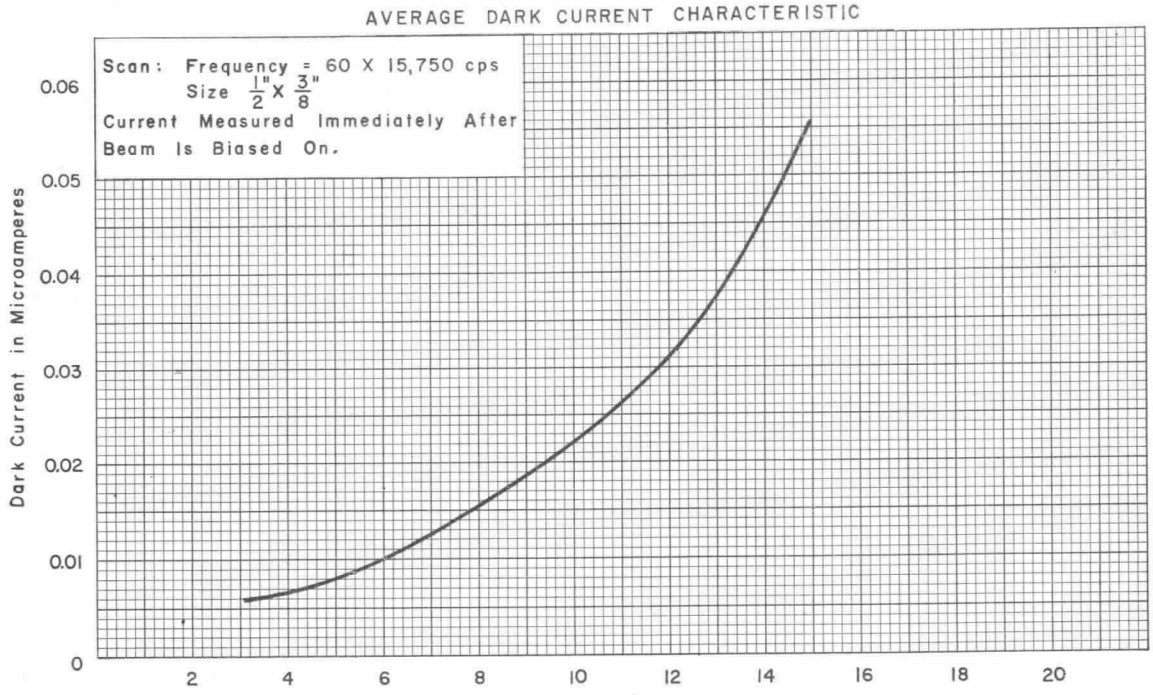

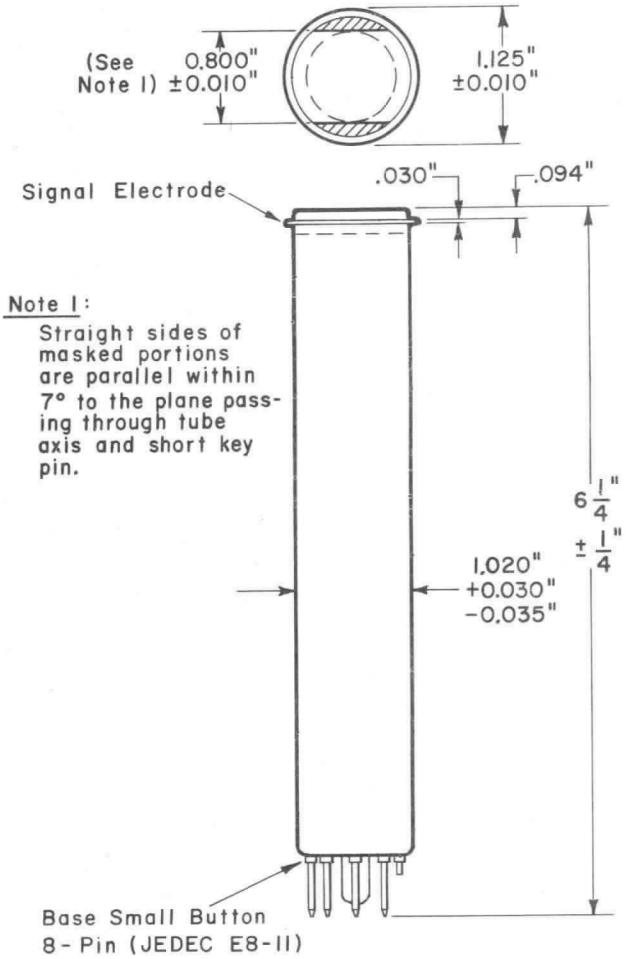

WARNING: When the Permachon is not in use, it should be stored in darkness. Light falling on the faceplate, when not in use, may cause damage. Do not allow the tube to operate under high illumination for long periods of time.

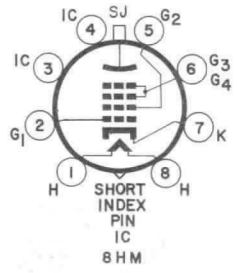

DIRECT VIEW STORAGE TUBE TYPE WL-22662

One Writing Gun
Viewing Gun
Integral Tube and Shield Assembly

4" Display Diameter
5-1/4" Overall Diameter
14-7/8" Overall Length

The WL-22662 is a display storage tube with high writing speed and moderate brightness. It is capable of electrically writing and storing a bright, flicker-free display on a 4 inch diameter fluorescent screen.

The viewing screen requires 10 kilovolts and the brightness exceeds 1200 fool-lamberts with a writing speed of 100,000 inches per second. The WL-22662 has a storage time of 30 seconds which permits storage and display of very high speed transients for liesurely examination. In applications of this type and others having written information of a repetitive character, the ability of the tube to integrate successive weak signals is of great utility.

Longer storage periods may be obtained by pulsing the flood gun. If the pulse rate is high enough, no flicker will be observed. In this manner, storage times up to 30 minutes may be achieved with some loss of brightness. The display would still be clearly visible in a lighted room.

The WL-22662 is suitable for applications such as airborne fire-control and navigational radar, weather radar, airport surveillance, transient studies and visual-display element in narrow-band-width data transmission systems.

The WL-22662 is designed for military use and is therefore capable of meeting appropriate military specifications. The entire tube is potted within a salt spray resistant magnetic shield with a synthetic silicone rubber material. Protection against mechanical shock, vibration, humidity and leakage between bulb terminals is thereby achieved.

One writing gun and a flood gun are mounted in the WL-22662. The writing gun has electrostatic focus and deflection.

OPTICAL:

Phosphor:	
Type	High Visual Efficiency, Aluminized P20
Fluorescence	Yellow-Green
Phosphorescence	Yellow-Green
Persistence	Short
Faceplate	Optical Glass, Ground and Polished Flat

MECHANICAL:

Minimum Useful Viewing Diameter	4"
Maximum Overall Length	15"
Maximum Seated Length	14-3/8"
Greatest Shield Diameter	5-1/4" ± 1/16"
Viewing Screen Terminal	AMP #832692-19
Caps on Large End of Bulb	
Backing Electrode	Recessed Small Ball (JEDEC J1-22)
Collector Electrode	Recessed Small Ball (JEDEC J1-22)
Collimating Electrode	Recessed Small Ball (JEDEC J1-22)
Base	14 Pin Small Diheptal (JEDEC B14-45)
Mounting Position	Any

ELECTRICAL:

Storage:				
Type			Half-Tone or Line	
Mode			Control of Transmission	
Type of Erasure			Overall	
Write Gun:				
Cathode			Coated Unipotential	
Heater:	Min.	Bogey	Max.	
Voltage (ac or dc)	5.67	6.3	6.93	Volts
Current	0.50	0.60	0.70	Amperes
Focusing Method			Electrostatic	
Deflection Method			Electrostatic	
Flood Gun:				
Cathode			Coated Unipotential	
Heater:	Min.	Bogey	Max.	
Voltage	5.67	6.3	6.93	Volts
Current	0.50	0.60	0.70	Ampere
Warm-up Time before Applying High Voltages	30	--	--	Seconds
Focus and Deflection	Undeflected, Collimated "Flood" Gun			
Direct Interelectrode Capacitances:				
External Integral Shield Grounded				
Writing Gun Grid 1 to All Internal Elements			8 max.	μμf
Deflection Electrode 1 to All Internal Elements			8 max.	μμf
Deflection Electrode 2 to All Internal Elements			8 max.	μμf
Deflection Electrode 3 to All Internal Elements			8 max.	μμf
Deflection Electrode 4 to All Internal Elements			8 max.	μμf

MAXIMUM RATINGS:

Absolute Maximum Values

Write Gun:			
(Reference Voltage is Write Gun Cathode)			
Grids 2 & 4 Voltage♦	3000	max.	Volts
With Respect to Flood Gun Cathode	200	max.	Volts
Grid 3 Voltage (Focus)	2000	max.	Volts
Negative with Respect to Flood Gun Cathode	2600	max.	Volts
Grid 1 Voltage:			
Negative Bias Value	200	max.	Volts
Positive Bias Value	0	max.	Volts
Positive Peak Value	2	max.	Volts
Cathode Voltage Negative with Respect to Flood Gun Cathode	2800	max.	Volts
Voltage Between any Deflection Electrode and Grids 2 & 4: ♦			
Positive or Negative Peak Value	500	max.	Volts
Peak Heater-Cathode Voltage:			
Heater Positive or Negative with Respect to Cathode	125	max.	Volts
Flood Gun:			
(Reference Voltage is Flood Gun Cathode)			
View Screen Voltage	11,000	max.	Volts
Grid 5 Voltage (Backing Electrode)	35	max.	Volts
Grid 4 Voltage (Collector Electrode)	300	max.	Volts
Grid 3 Voltage (Collimating Electrode)	200	max.	Volts
Grid 2 Voltage (Accelerating Electrode)♦	200	max.	Volts
Grid 1 Voltage:			
Negative Bias Value	200	max.	Volts
Positive Bias Value	0	max.	Volts
Peak Heater-Cathode Voltage			
Heater Positive or Negative with Respect to Cathode	125	max.	Volts

LIMITING CIRCUIT VALUES:

View Screen Series Current-Limiting Resistance	1.0	min.	Megohm
Backing Electrode Circuit Resistance	5000	max.	Ohms
Collector Electrode Unbypassed Series Current-Limiting Resistance	22000	min.	Ohms
Grid 1 Circuit Resistance	1.0	max.	Megohm
Resistance in Any Deflecting Electrode Circuit⊕	0.1	max.	Megohm

ENVIRONMENTAL LIMITS:

Atmospheric Pressure	45	max.	P.S.I.
Altitude (Non-pressurized)	60,000	max.	Feet
Temperature:			
Operating	−35 to +71		°C
Non-Operating	−62 to +85		°C
Relative Humidity (Non-Operating)	95		Percent

Vibration . . . . . Sinusoidal Vibration from 5 to 18 cycles per second with a total excursion of 0.30 inches and from 18 to 500 cycles per second with 3 g acceleration will not damage the tube.

TYPICAL OPERATING CONDITIONS AND CHARACTERISTICS

Note: Damage to the tube may occur if the Write-Gun beam is turned on before the Flood-Gun-beam current has reached normal operating value or if the Flood-Gun beam is turned off before the Write-Gun beam.

Reference Point for DC Voltages is Ground

Write Guns:			
Grids 2 & 4 Voltage♦	0 to 200		Volts
Grid 3 Voltage (Focus)	−2000 to −2300		Volts
Grid 1 Voltage to Writing Gun Cathode	0 to −70		Volts
Cathode Voltage	−2400		Volts
Grids 2 & 4 Current	100		μampere
Grid 3 Current (per gun)	−10 to 5		μampere
Cathode Current	See Gun Transfer Characteristic		
Deflection Factors			
Deflection Electrodes 1 and 2♦	72 to 88		V dc/In.
Deflection Electrodes 3 and 4♦	72 to 88		V dc/In.
Focused Beam Position†	0.5		Inch

Flood Gun:	Range	Typical	
View Screen Voltage	8000 to 10,000	10,000	Volts
Grid 5 Voltage (Backing Electrode)	−	2	Volts
Grid 4 Voltage (Collecting Electrode)	150 to 300	250	Volts
Grid 3 Voltage (Collimating Electrode)	5 to 150	80	Volts
Grid 2 Voltage♦	90 to 110	100	Volts
Grid 1 Voltage	0 to −50	0	Volts
Cathode		Grounded	
View Screen Current		250	μamperes
Grid 5 Current (Backing Electrode)		2	μamperes
Grid 4 Current (Collector Electrode)		1.5	Ma.
Grid 3 Current (Collimating Electrode)		200	μamperes
Cathode Current		2	Ma.

NOTES

♦ Adjust for astigmatism control.

♦ For other values of cathode to Grids 2 & 4 Voltages, the deflection factor is approximately 32 ± 10% V dc/In./KV of cathode to Grids 2 & 4 Voltage.

† With all deflection electrodes tied to Grids 2 & 4, and erasure at a convenient value the undeflected, focused spots will fall within a circle of 0.5 inch radius, centered on the tube faceplate.

⊕ Approximately equal resistances should be used in each deflection electrode circuit

THE PRIME OPERATION

The tube is said to be primed when the entire surface of the storage dielectric is charged uniformly to flood-gun-cathode potential. The backing electrode/storage grid then has minimum cutoff effect on the flood beam electrons and the entire viewing screen is uniformly illuminated to saturation brightness. If the storage surface is then erased to cutoff by applying a positive pulse train to the backing electrode, the flood beam electrons will just be prevented from passing through to the viewing screen. The surface, then, will be completely free of past history. This is the starting point for all accurate measurements on the tube.

The fastest and most effective method of priming the surface is by momentarily increasing the backing electrode potential by about 200 volts. This can most conveniently be done by switching the backing electrode lead to collector potential, leaving it there one or two seconds then switching it back to its own potential of 10 volts.

One note of caution; because the flood gun beam current reaches a maximum value during the time when the two electrodes are connected together, they should not be allowed to remain so connected for long periods (over 10 or 15 seconds). Leaving the tube in the prime condition for extended periods will result in a loss of light output due to viewing screen damage and in temporary reduction in viewing duration due to evolution of excessive amounts of gas from the viewing screen. Viewing duration can be restored by leaving the tube in the erase mode for 15 or 20 minutes - allowing the getters to absorb the excess gas, but any damage to the viewing screen cannot be repaired.

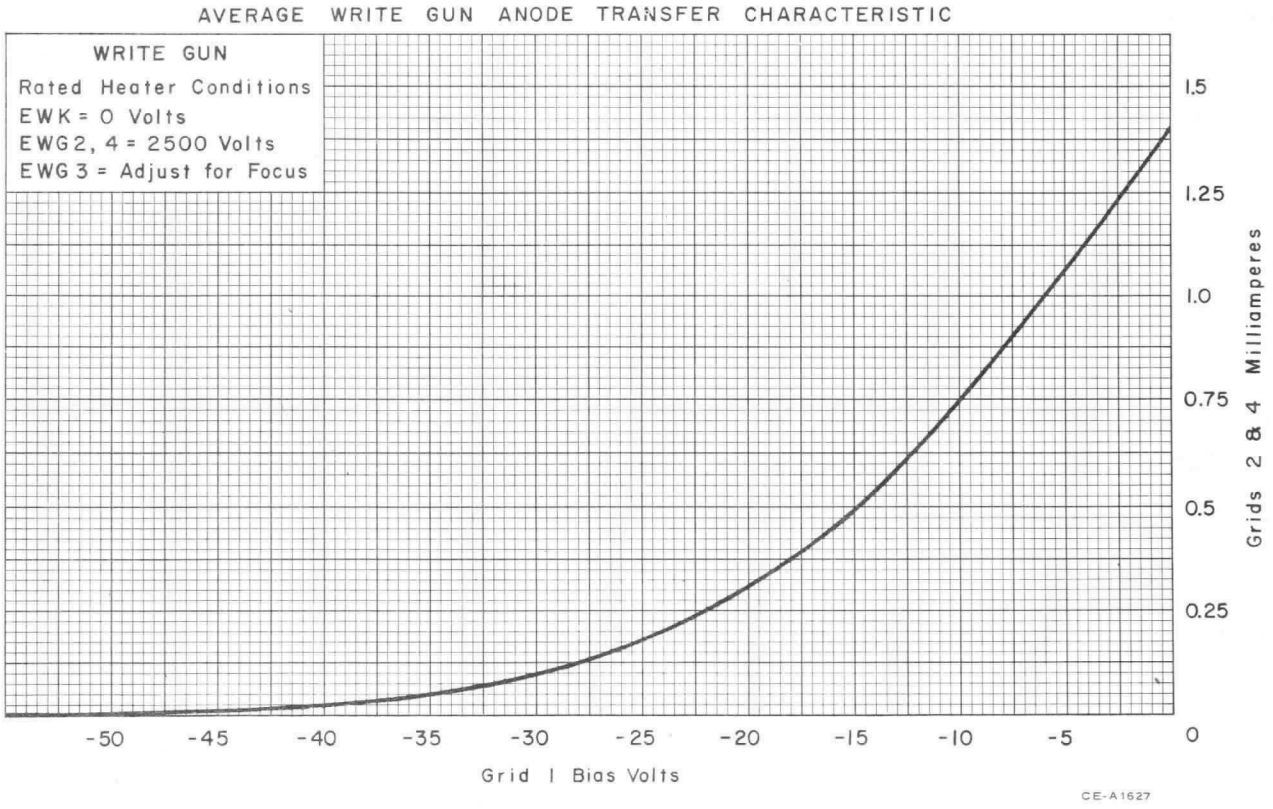

PERFORMANCE DATA

Viewing Time	30	Seconds
Erasing Time (Flood Gun Erasure)	75	Milliseconds
Display Uniformity (Δep min.)	2	Volt
Writing Speed	100,000	Inches/Second
Half Tones	4	
Brightness (Screen Voltage =10 KV)	1200	Ft-Lamberts
Contrast Ratio	10	
Resolution	50	Lines/Inch
Grid Drive	30	Volts

Methods of Measuring Tube Performance

Viewing Time: Viewing duration is the time during which the visual output of a storage tube increases from exactly visual extinction to 10% of saturated brightness without the application of a writing signal or erase pulses. The tube shall be primed and then erased to exactly visual extinction. The erase pulses are removed and the screen allowed to increase in brightness. The time interval required for the brightness level at the center of the screen to increase to 10% of saturated brightness is the viewing duration.

Erasing Time: The storage surface is primed. Erasure is produced by a positive rectangular pulse applied to the backing electrode. The amplitude of this pulse is set to one volt above backing electrode cutoff and the pulse width necessary to erase from saturated brightness to 10% of saturation brightness is the erasing time.

Display Uniformity (Δ ep min.): The difference between the amplitude of an erase pulse required to brighten any area of an unwritten screen, and the amplitude of an erase pulse required to evenly illuminate the screen is described as the display uniformity, (Δ ep min.). The erase pulses used for this measurement are positive rectangular pulses adjusted from 2 to 10 volts peak to peak to produce complete erasure in 50 milliseconds.

Writing Speed (Cathode Current): A raster is applied having frequencies and trace length necessary to produce a scanning speed of 100,000 inches per second. The focus electrode is adjusted for best focus at the center of the raster. The tube is erased to cutoff and a single raster is written by applying a rectangular pulse of adjustable amplitude to Grid 1 of the writing gun. The last step is repeated moving the lines of the raster progressively closer together until the individual lines in the written raster cannot be discerned visually. As the lines approach the merging condition, the control grid pulse amplitude is adjusted to give a written raster of 1200 ft-L. When this brightness is achieved and the lines cannot be discerned visually, the condition of visually limited contrast ratio exists and it is under this condition that the cathode current is measured.

Contrast Ratio: A trace is written to saturation brightness while continuously writing and erasing. Using positive rectangular erase pulses variable from 2 to 10 volts peak-to-peak, the persistence (time required for a written area to be reduced to 10% of saturated brightness) is adjusted to 2 seconds. The ratio of brightnesses in the written and unwritten areas is defined as the contrast ratio. This measurement is made with a maximum ambient brightness of 10 foot-lamberts.

Resolution: A 60 cps sawtooth voltage is applied between deflecting electrodes D_3D_4 and a 2100 to 6300 cps sawtooth voltage is applied between deflecting electrodes D_1 and D_2 giving a raster of approximately 40 lines. Blanking is used to eliminate trace return lines. Trace length shall be adjusted to 3.5 inches. Raster is expanded and number of lines determined. Focus electrode is adjusted for best focus at the center of the raster. Backing electrode is erased to cutoff and G_1, writing gun, is pulsed to write a single raster. Last step is repeated moving the lines progressively closer together until the individual lines in the written raster cannot be discerned visually. As the lines approach the merging condition, the grid pulse amplitude shall be adjusted to give brightness of 200 ft-L. When the specified brightness is achieved and the lines cannot be discerned visually, the condition for visually limited contrast ratio exists, and the resolution measured at this condition is the limiting resolution.

The resolution in lines per inch is the number of horizontal lines counted when the raster was expanded divided by the height of the compressed raster.

Grid Drive: This is the drive required for writing to 90% of saturated brightness with a writing speed of 100,000 inches per second in 1 scan. Note the writing gun drive characteristic. In the useful region, writing speed is proportional to writing current.

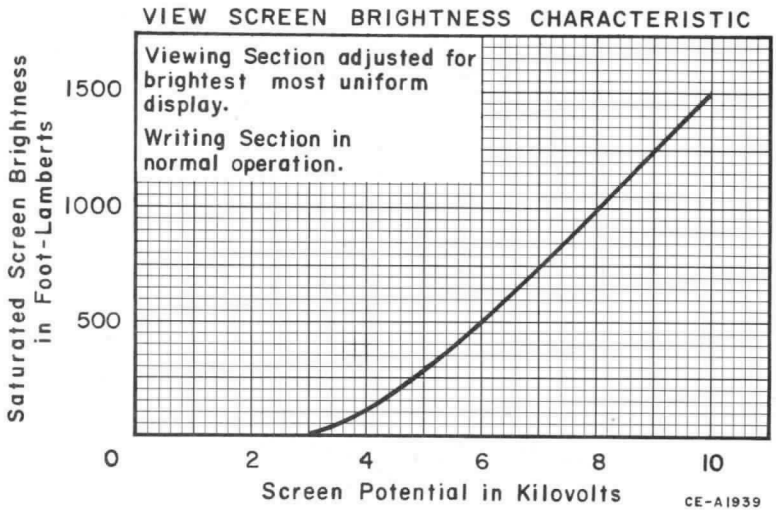
VIEW SCREEN BRIGHTNESS CHARACTERISTIC
Viewing Section adjusted for brightest most uniform display.
Writing Section in normal operation.
Saturated Screen Brightness in Foot-Lamberts
1500
1000
500
0
2
4
6
8
10
Screen Potential in Kilovolts
CE-A1939

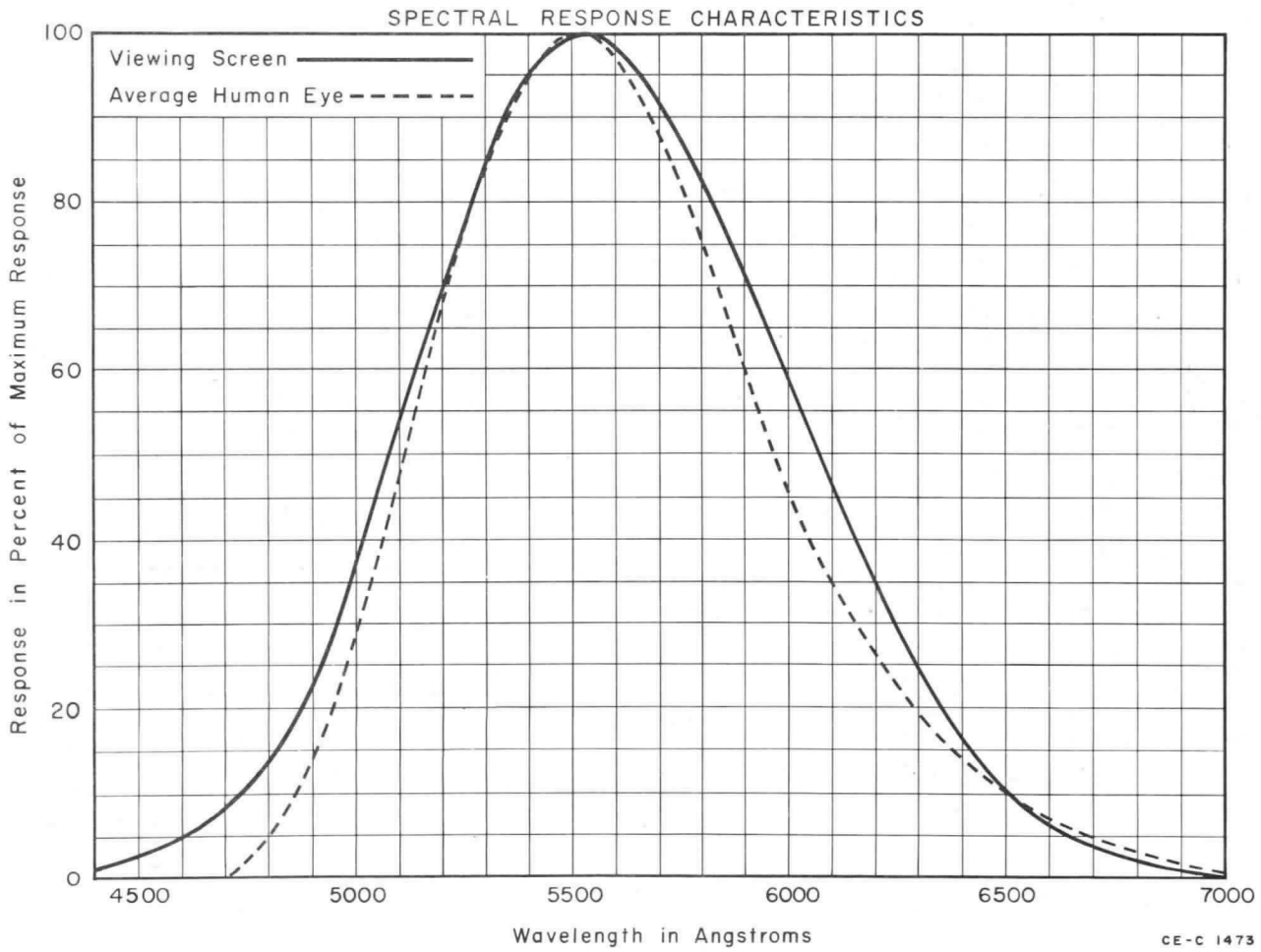
SPECTRAL RESPONSE CHARACTERISTICS
Viewing Screen
Average Human Eye
Response in Percent of Maximum Response
100
80
60
40
20
0
4500
5000
5500
6000
6500
7000
Wavelength in Angstroms
CE-C 1473

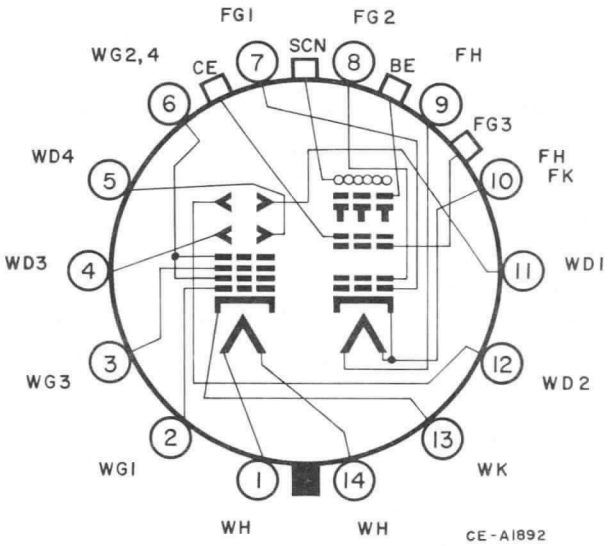

INDEX OF TERMINALS

BASE PINS

Pin No.	Gun	Element
1	Write	Heater
2	Write	Grid 1
3	Write	Grid 3 (Focus)
4	Write	Deflection Electrode 3
5	Write	Deflection Electrode 4
6	Write	Grids 2 & 4
7	Flood	Grid 1
8	Flood	Grid 2
9	Flood	Heater
10	Flood	Heater & Cathode
11	Write	Deflection Electrode 1
12	Write	Deflection Electrode 2
13	Write	Cathode
14	Write	Heater

CAPS ON LARGE END OF BULB

Gun	Element
Flood	Grid 3 (Collimating Electrode)
Flood	Collecting Electrode
Flood	Backing Electrode
Flood	View Screen

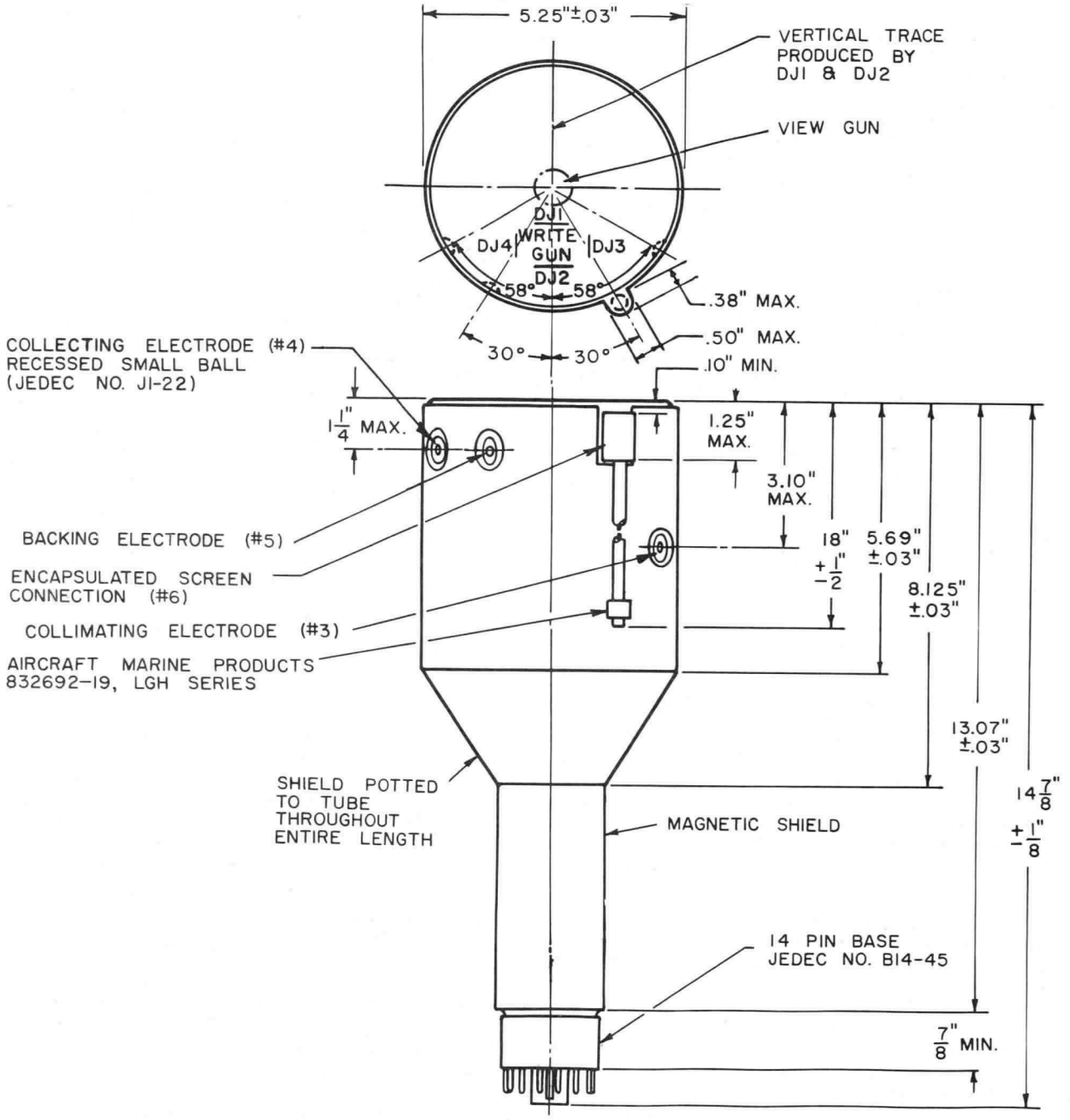
5.25"±.03"
VERTICAL TRACE PRODUCED BY DJ1 & DJ2
VIEW GUN
DJ1
DJ4
WRITE GUN
DJ3
DJ2
58°
58°
.38" MAX.
.50" MAX.
30°
30°
.10" MIN.
COLLECTING ELECTRODE (#4) RECESSED SMALL BALL (JEDEC NO. J1-22)
1 1/4" MAX.
1.25" MAX.
3.10" MAX.
BACKING ELECTRODE (#5)
ENCAPSULATED SCREEN CONNECTION (#6)
COLLIMATING ELECTRODE (#3)
AIRCRAFT MARINE PRODUCTS 832692-19, LGH SERIES
18" +1"/-2
5.69" ±.03"
8.125" ±.03"
13.07" ±.03"
14 7/8" +1"/-8
SHIELD POTTED TO TUBE THROUGHOUT ENTIRE LENGTH
MAGNETIC SHIELD
14 PIN BASE JEDEC NO. B14-45
7/8" MIN.

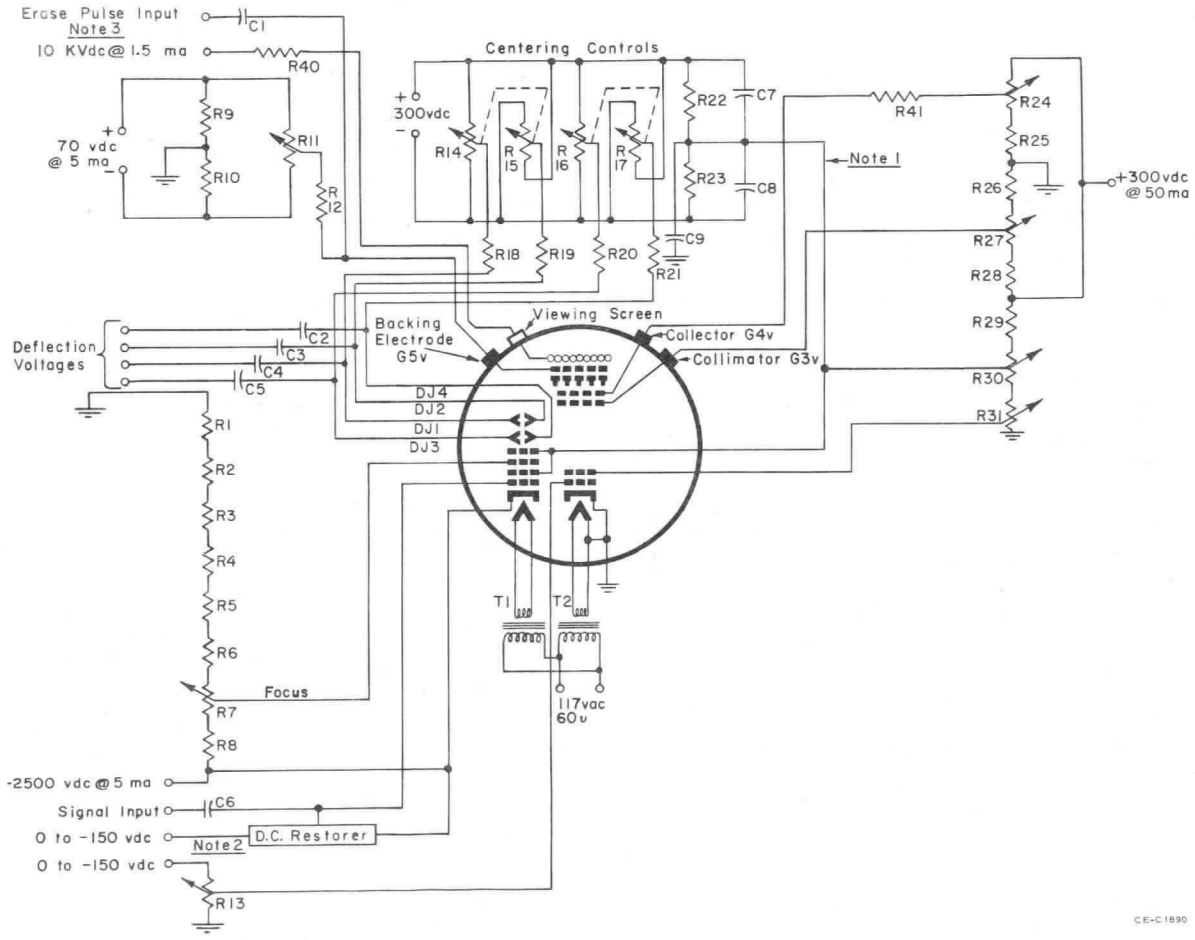

Note 1: The mean deflection potential is referred to the writing gun final anode potential to prevent astigmatism.
Note 2: Voltages are with respect to writing gun cathode. Entire supply must be insulated from ground for 4000 volts.
Note 3: Erase Pulse Characteristics, Amplitude: 0 to 10 volts peak-to-peak, Width: 2 to 10 microseconds, Frequency: 0 to 1000 pulses per second.

C_1: 0.1 μf, 200 volts
C_2, C_3, C_4, C_5: Value depends on deflection-voltage frequency and waveform
C_6: Value depends on signal-voltage frequency and waveform, 4000 volts
C_7, C_8: 0.05 μf, 600 volts
C_9: 0.5 μf, 600 volts
R_1: 91,000 ohms, 1 watt
R_2, R_{25}, R_{29}: 100,000 ohms, 1 watt
R_3, R_4, R_5, R_6: 470,000 ohms, 2 watts
R_7: Write Gun Focus Control: 250,000-ohm potentiometer, 2 watts
R_8: 180,000 ohm, 1 watt
R_9, R_{10}, R_{22}, R_{23}: 1 megohm, 0.5 watt
R_{11}: Backing Electrode Control: 100,000-ohm potentiometer, 2 watts
R_{12}: 5,000 ohm, 1 watt
R_{13}: Flood Gun Grid 1 Control: 250,000-ohm potentiometer 2 watts
R_{14}, R_{15}: Write Gun D_1 & D_2 Centering Controls: Dual 1 megohm potentiometers, 2 watts
R_{16}, R_{17}: Write Gun D_3 & D_4 Centering Controls: Dual 1 megohm potentiometers, 2 watts
R_{18}, R_{19}, R_{20}, R_{21}: 100,000 ohm, 0.5 watt
R_{24}: Collector Electrode Control: 200,000-ohm potentiometer, 2 watts
R_{26}, R_{28}: 51,000 ohm 1 watt
R_{27}: Collimating Electrode Control: 200,000-ohm potentiometer, 2 watts
R_{30}: Accelerating Anode Control: 150,000 ohm potentiometer, 2 watts
R_{31}: Flood-Gun Grid 2 Control: 50,000 ohm, 1 watt potentiometer
R_{40}: 1 megohm, 5 watts
R_{41}: 22,000 ohm, 1 watt
T_1: Filament Transformer: Primary 117 volts, Secondary 6.3 volts @ 1 ampere, Insulated for 4000 volts
T_2: Filament Transformer: Primary 117 volts, Secondary 6.3 volts @ 1 ampere

The information contained herein is supplied without assuming responsibility for infringement of patents or other rights of third parties which may result from its use. No license is granted by implication or otherwise under any patent or patent rights of Westinghouse Electric Corporation.

Westinghouse

Image Dissector
3" High Resolution

Type: WL-23111
Short Rise & Decay Time
Digital Readout Capability
Magnetic Focus & Deflection
Simple Circuitry
Inherently Reliable

Application

The WL-23111 is an extremely high resolution image pickup tube, with excellent gray-scale rendition and absence of lag, ideal for microfilm readout, TV film cameras and high-speed flying spot scanning.

The WL-23111 uses the image dissector principle and is inherently more rugged and longer-lived because it has no target or hot cathode to deteriorate. Circuitry is simpler because there is no beam-forming gun. Standard image orthicon components may be used when scan rates permit.

Electrical

Direct Interelectrode Capacitance:
  Anode to All Other Electrodes .... 20 pF
Photocathode:
  Spectral Response S-20
  Sensitivity (Minimum).... 150 μA/Lumen
  Multiplier Current Amplification
  (Note 1) ..... 1×10^6
Focusing Method ..... Magnetic
Focus Coil ..... Cleveland Electronics
  OF-2 or Equivalent.
Deflection Method..... Magnetic
Deflection Yoke ..... Cleveland Electronics
  OY-1-2 or Equivalent (Note 2).

Mechanical

Overall Length ..... 20" ± ¼"
Diameter:
  Image End ..... 3" ± 1/16"
  Neck (Max., At Largest Part)..... 2.275"
  Useful Centered Image (Max.) ..... 1.6"
Shoulder Base. . .Keyed Jumbo Annular, 7-Pin
End Base ..... EIA Group 5,
  14-Pin Base No. B14-45
Operating Position ..... Any
Net Weight (Approx.) ..... 2.5 Pounds

Maximum Ratings

Absolute Maximum Values (Note 3)

Photocathode:		
Voltage	−3500 max.	Volts
Current (Note 4)	4.0 max.	μAmpere
Operating Temperature	−50 to +55	°C
Grid 6 Voltage	−3000 max.	Volts
Focus Electrode Voltage	−2600 max.	Volts
Grid 5 Voltage	−2600 max.	Volts
Grid 4 Voltage	−2600 max.	Volts
Grid 3 & Resolving Aperture Voltage	−2600 max.	Volts
Dynode 1 Voltage	−2600 max.	Volts
Inter-Dynode Voltage	200 max.	Volts

Typical Operation (Note 3)

Photocathode Voltage	−2400	Volts
Photocathode Current (Note 4)	2.0	μAmpere
Grid 6 Voltage (Note 5)	−2200	Volts
Focus Electrode Voltage	−1900 to −2150	Volts
Grid 5 Voltage	−1800	Volts
Grid 4 Voltage	−1800	Volts
Grid 3 & Resolving Aperture Voltage	−1800	Volts
Dynode 1 Voltage	−1800	Volts
Inter-Dynode Voltage	150	Volts
Magnetic Focus Field Strength	80	Gauss
Peak Deflection Current for Specified Yoke:		
Horizontal (Approx.)	0.7	Ampere/Inch
Vertical (Approx.)	0.25	Ampere/Inch

Notes

1. Measured with 140 volts per stage.
2. The deflection yoke will require modification in the wiring to accomodate higher voltages to the shoulder socket.
3. Voltages are with respect to anode. Basic power supply requirements are shown in drawing.
4. Measured with uniform illumination on 1 square-inch of photocathode.
5. Adjust for optimum focus.

Limiting Resolution

The resolution capability of an image dissector is a constant parameter for each tube, determined by an internal aperture and is therefore an inherent characteristic for a specific tube.

Image Dissectors may be obtained with various resolving aperture shapes and sizes. The resolving aperture diameter may range from approximately 0.0005" to 0.060". A graph of Signal-to-Noise Ratio Vs Horizontal Scan Time is shown on page 2 for tubes with circular apertures from 0.010" (limiting resolution ≈ 200 TV Lines/inch) to 0.0006" (limiting resolution ≈ 3200 TV Lines/inch).

May 1968
Supersedes WL-23111 dated March 15, 1965
S6−3A−11C, S5−10C, WI−1300

Westinghouse

SIGNAL - TO - NOISE RATIO CHARACTERISTICS

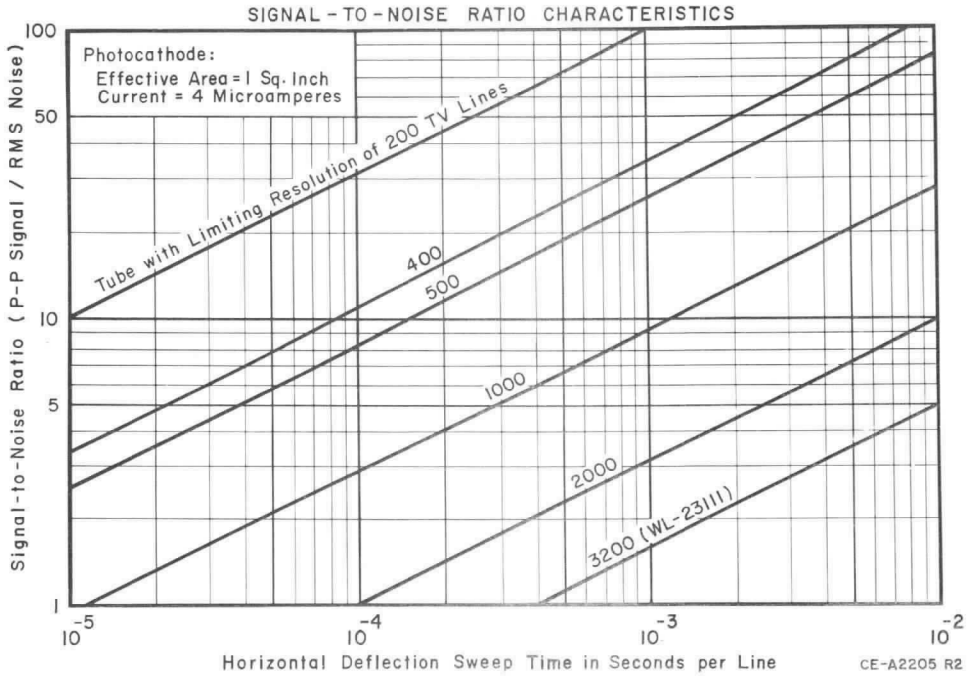

TYPICAL OPERATING CIRCUIT

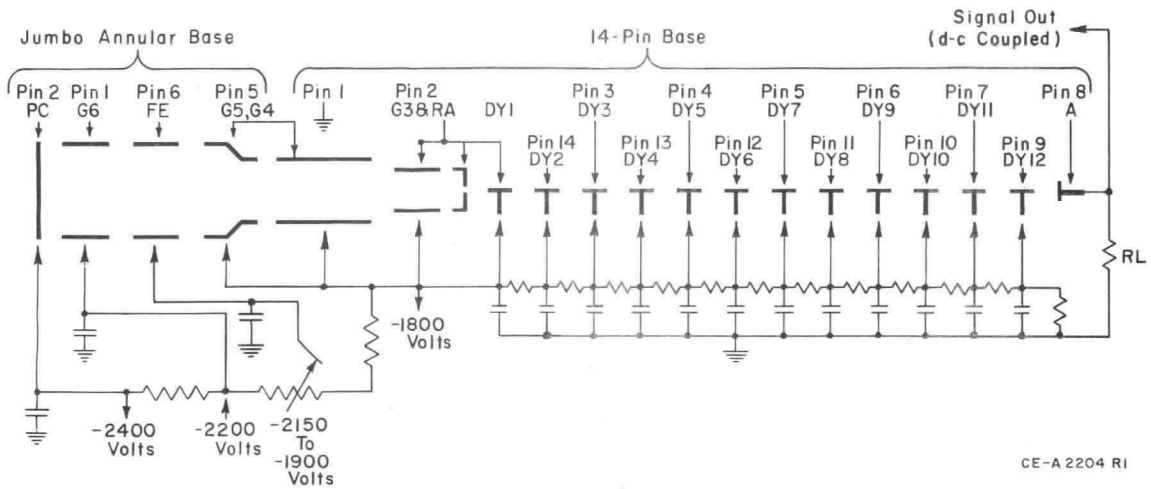

Image Dissector
3" High Resolution

Type: WL-23111
Short Rise & Decay Time
Digital Readout Capability
Magnetic Focus & Deflection
Simple Circuitry
Inherently Reliable

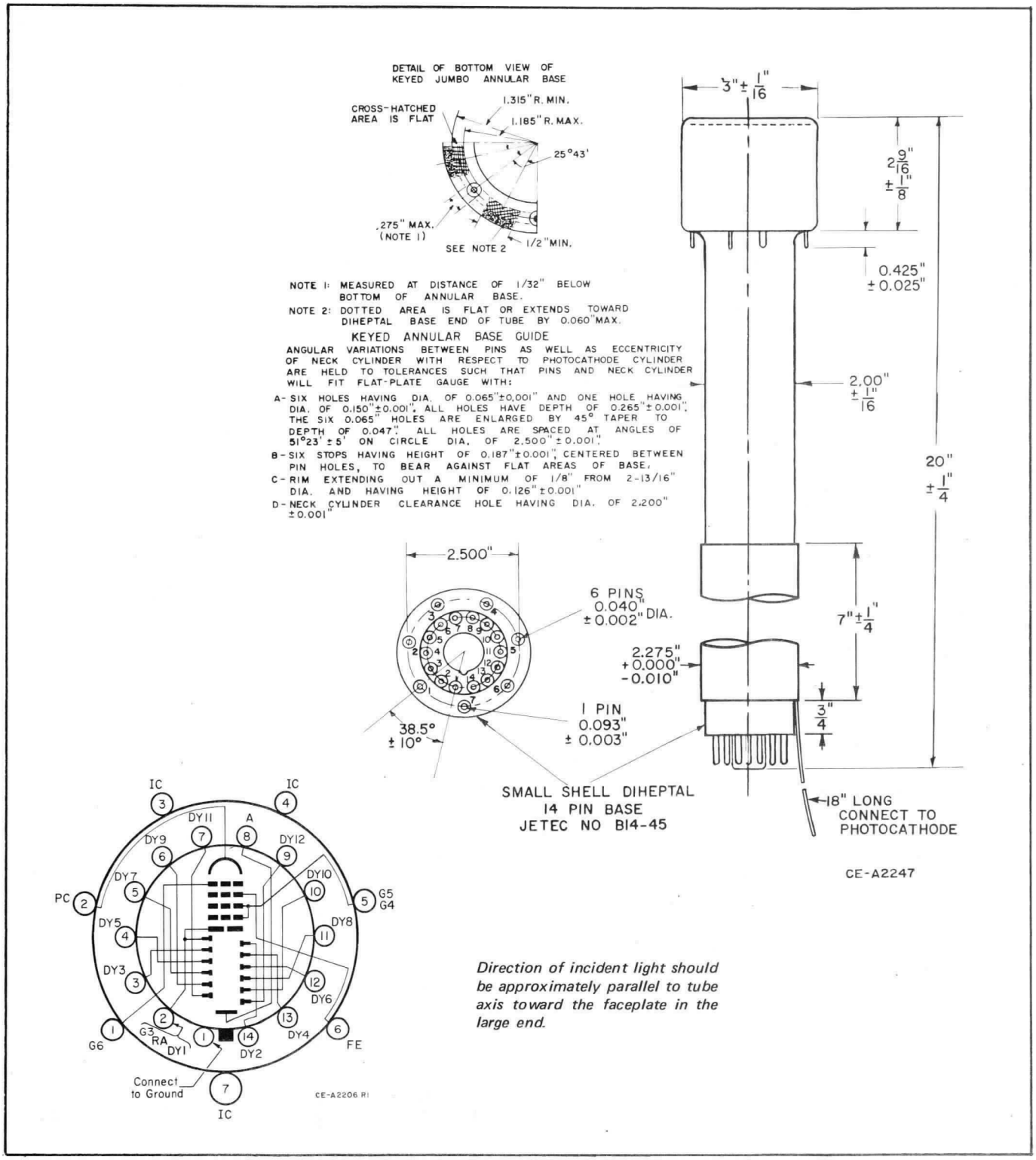

Direction of incident light should be approximately parallel to tube axis toward the faceplate in the large end.

Image Dissector
3" High Resolution

Type: WL-23111
Short Rise & Decay Time
Digital Readout Capability
Magnetic Focus & Deflection
Simple Circuitry
Inherently Reliable

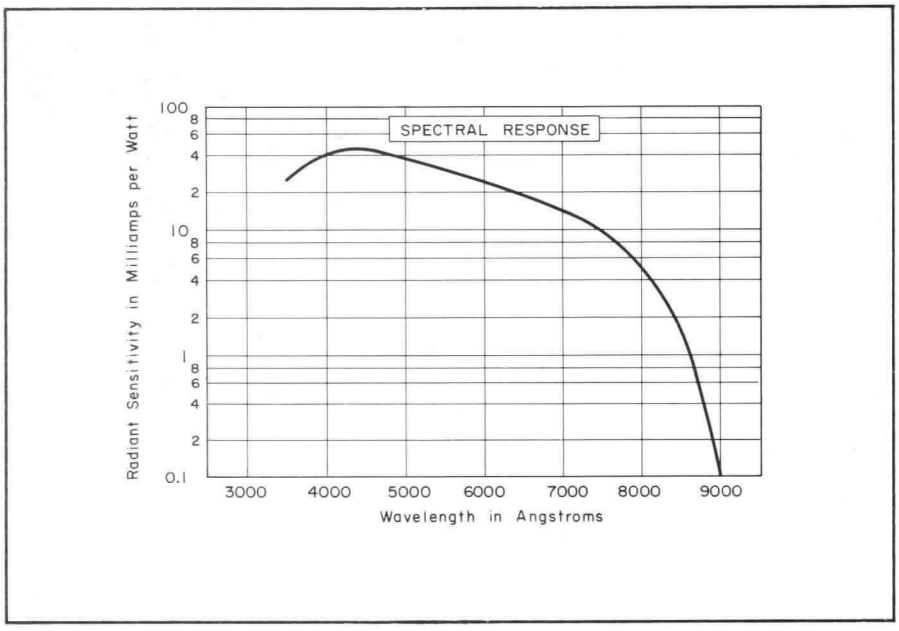

Westinghouse Electric Corporation
Electronic Tube Division, Elmira, N. Y. 14902
Printed in U.S.A.

Westinghouse

Display Storage Tube

Type: WX-30154 ★
One Writing Gun

5.8″ (147mm) Display Diameter
Electrostatic Focus & Deflection
45 Lines/Inch (1.8 Lines/mm) Resolution
5 x 10^4 Inches/Second (1.3 x 10^6 mm/Second) Writing Speed

Application

The WX-30154 is a ruggedized, single writing gun display storage tube with more than two times the usable viewing area of a 5″ (127mm) display storage tube. It features a single viewing gun and a writing gun with a resolution of 45 lines/inch (1.8 lines/mm) or 260 lines/diameter at a writing speed of 5 x 10^4 inches/second (1.3 x 10^6 mm/second). The external magnetic shield, bonded to the tube envelope with a silicone-rubber compound, protects the tube from 15G shocks and 100% humidity in the temperature range −55° to +85°C.

The WX-30154 is useful in display applications requiring controllable persistence, signal integration, controlled storage time or high display brightness. The WX-30154 performs well in electrical transient studies, fire control, navigation and terrain-avoidance radar, weather radar and specialized oscilloscope displays.

Electrical

Storage

Type	Half-Tone or Line
Mode	Control of Transmission
Type of Erasure	Overall

Write Gun

Cathode	Coated Unipotential

Heater:	Min.	Bogey	Max.	
Voltage (ac or dc)	5.67	6.3	6.93	Volts
Current	0.50	0.60	0.70	Ampere

Focusing Method	Electrostatic
Deflection Method	Electrostatic

Flood Gun

Cathode	Coated Unipotential

Heater:	Min.	Bogey	Max.	
Voltage	5.67	6.3	6.93	Volts
Current	0.50	0.60	0.70	Ampere

Warm-up Time before applying High Voltage	30	—	— Seconds
Focus & Deflection	Undeflected, Collimated "Flood" Gun		

Direct Interelectrode Capacitances: (Note 1)

All Internal Elements To:	
Writing Gun Grid 1	50 max. pF
Deflection Electrode 1	50 max. pF
Deflection Electrode 2	50 max. pF
Deflection Electrode 3	50 max. pF
Deflection Electrode 4	50 max. pF

Optical

Phosphor	High Visual Efficiency, Aluminized P20
Fluorescence	Yellow-Green
Phosphorescence	Yellow-Green
Persistence	Short
Faceplate	Optical Glass, Ground and Polished Flat

Mechanical

Minimum Useful Viewing Diameter	5.8″ (147mm)
Maximum Overall Length	18.37″ (466.6mm)
Greatest Shield Diameter	7.37″ (187.2mm)
Electrical Connections	Flying Leads
Mounting Position	Any

Maximum Ratings

Absolute Maximum Values

Write Gun

(Reference Voltage is Write Gun Cathode)

Grids 2 & 4 Voltage (Note 2)	3000 max. Volts
With Respect to Flood Gun Cathode	200 max. Volts
Grid 3 Voltage (Focus)	2200 max. Volts
Negative with Respect to Flood Gun Cathode	2600 max. Volts
Grid 1 Voltage:	
Negative Bias Value	200 max. Volts
Positive Bias Value	0 max. Volts
Positive Peak Value	2 max. Volts
Cathode Voltage Negative with Respect to Flood Gun Cathode	2800 max. Volts
Voltage Between any Deflection Electrode and Grids 2 & 4:	
Positive or Negative Peak Value	500 max. Volts
Peak Heater-Cathode Voltage:	
Heater Positive or Negative with Respect to Cathode	125 max. Volts

Flood Gun

(Reference Voltage is Flood Gun Cathode)

View Screen Voltage	11000 max. Volts
Grid 5 Voltage (Backing Electrode)	35 max. Volts
Grid 4 Voltage (Collector Electrode)	300 max. Volts
Grid 3 Voltage (Collimating Electrode)	200 max. Volts
Grid 2 Voltage (Accelerating Electrode)	150 max. Volts
Grid 1 Voltage:	
Negative Bias Value	150 max. Volts
Positive Bias Value	0 max. Volts
Peak Heater-Cathode Voltage :	
Heater Positive or Negative with Respect to Cathode	125 max. Volts

Limiting Circuit Values

View Screen Series Current-Limiting Resistance	1.0 min. Megohm
Backing Electrode Circuit Resistance	50000 max. Ohms
Collector Electrode:	
Unbypassed Series Current-Limiting Resistance	22000 min. Ohms
Grid 1 Circuit Resistance	1.0 max. Megohm
Resistance in Any Deflecting Electrode Circuit (Note 3)	0.1 max. Megohm

Environmental Limits

Atmospheric Pressure (Abs.)	45 max. PSI (22 max. g/cm^2)
Altitude (Non-pressurized)	30000 max. Feet (9150 max. Meters)
Temperature:	
Operating	−35 to +71 °C
Non-Operating	−55 to +85 °C
Relative Humidity (Non-Operating)	95%

Vibration ..... Sinusiodal Vibration from 5 to 18 cycles per second with a total excursion of 0.30 inches (7.6mm) and from 18 to 500 cycles per second with 3 g acceleration will not damage the tube.

★ The WX-number identifies a specific laboratory design; the design and, consequently, the data and type number are subject to change. No obligations are assumed to manufacture this particular device in the future unless otherwise arranged. These drawings and specifications are the property of Westinghouse Electric Corporation, Electronic Tube Division, and shall not be reproduced or copied or used as the basis for the manufacture or sale of apparatus and/or devices without permission.

February 1971
Supersedes WX-30154 dated December 9, 1964
TC−2238-2

Westinghouse

Typical Operating Conditions and Characteristics

Note: Damage to the tube may occur if the Write-Gun beam is turned on before the Flood-Gun-beam current has reached its normal operating value or if the Flood-Gun is turned off before the Write-Gun beam.

Reference Point for DC Voltage is Ground

Write Gun

Grids 2 & 4 Voltage (Note 2)	150 to 170	Volts
Grid 3 Voltage (Focus)	−1600 to −2000	Volts
Grid 1 Voltage to Writing Gun Cathode	0 to −90	Volts
Cathode Voltage	−2500	Volts
Grids 2 & 4 Current	1.5	mA
Grid 3 Current (per gun)	−10 to 5	μA
Cathode Current (max.)	2	mA
Deflection Factors:		
Deflection Electrodes 1 & 2	19 to 30	Vdc/In/KV
	(0.71 to 1.2	Vdc/mm/KV)
Deflection Electrodes 3 & 4	19 to 30	Vdc/In/KV
	(0.7 to 1.2	Vdc/mm/KV)
Focused Beam Position (Note 4)	0.45	Inch
	(11.4	mm)

Flood Gun

View Screen Voltage	10000	Volts
Grid 5 Voltage (Backing Electrode)	2	Volts
Grid 4 Voltage (Collecting Electrode)	210	Volts
Grid 3 Voltage (Collimating Electrode)	0 to 175	Volts
Grid 2 Voltage	40 to 100	Volts
Grid 1 Voltage	0	Volts
Cathode		Grounded
View Screen Current	1	mA
Grid 5 Current (Backing Electrode)	2	μA
Grid 4 Current (Collector Electrode)	1.3	mA
Grid 3 Current (Collimating Electrode)	400	μA
Grid 2 Current	500	μA
Cathode Current	2.5	mA

Notes

1. Measured at ends of flying leads.
2. Adjust for astigmatism control.
3. Approximately equal resistances should be used in each deflection electrode circuit.
4. With all deflection electrodes tied to Grids 2 & 4, and erasure at a convenient value the undeflected focused spots will fall within a circle of 0.45 inch (11.4mm) radius, centered on the tube faceplate.

Performance Data

*Viewing Time	40	Seconds
*Erasing Time (Flood Gun Erasure)	500	Milliseconds
Display Uniformity (Δep min.)	1.4	Volt
*Writing Speed	5×10^4	Inches/Second
	(1.3×10^6	mm/Second)
Half Tones	4	—
Luminance (Screen Voltage = 10KV)	750	Ft-Lamberts
Contrast Ratio	10	—
Resolution	45	Lines/Inch
	(1.8	Lines/mm)

*Viewing Time, Writing Speed and Erasing time are characteristics readily changed without redesign. Although they can be supplied in a wide range of values, a change in one causes a change in the others. For data tailored to specific system requirements, consult the manufacturer.

Methods of Measuring Tube Performance

Viewing Time: Viewing duration is the time during which the visual output of a storage tube increases from exactly visual extinction to 10% of saturated luminance without the application of a writing signal or erase pulses. The tube shall be primed and then erased to exactly visual extinction. The erase pulses are removed and the screen allowed to increase in brightness. The time interval required for the brightness level at the center of the screen to increase to 10% of saturated luminance is the viewing duration.

Erasing Time: The storage surface is primed. Erasure is produced by a positive rectangular pulse applied to the backing electrode. The amplitude of this pulse is set to one volt above backing electrode cutoff and the pulse width necessary to erase from saturated luminance to 10% of saturation is the erasing time.

Display Uniformity (Δep min.): The difference between the amplitude of an erase pulse required to brighten any area of an unwritten screen, and the amplitude of an erase pulse required to evenly illuminate the screen is described as the display uniformity, (Δep min.). The erase pulses used for this measurement are positive rectangular pulses adjusted from 2 to 10 volts peak to peak with a 2% duty cycle.

Writing Speed: A raster is applied having frequencies and trace length necessary to produce a scanning speed of 5×10^4 inches per second (1.3×10^6 mm/second). The focus electrode is adjusted for best focus at the center of the raster. The tube is erased to cutoff and a single raster is written by applying a rectangular pulse of adjustable amplitude to Grid 1 of the writing gun.

Contrast Ratio: A trace is written to saturation luminance while continuously writing and erasing. Using positive rectangular erase pulses variable from 2 to 10 volts peak-to-peak, the persistence (time required for a written area to be reduced to 10% of saturated luminance) is adjusted to 2 seconds. The ratio of luminance in the written and unwritten areas is defined as the contrast ratio. This measurement is made with a maximum ambient of 10 foot-lamberts.

Display Storage Tube

Type: WX-30154
One Writing Gun

5.8″ (147mm) Display Diameter
Electrostatic Focus & Deflection
45 Lines/Inch (1.8 Lines/mm) Resolution
5 x 10^4 Inches/Second (1.3 x 10^6 mm/Second) Writing Speed

Resolution: A 60 hertz sawtooth voltage is applied between deflecting electrodes D_3 D_4 and a 2100 to 6300 cps sawtooth voltage is applied between deflecting electrodes D_1 and D_2 giving a raster of approximately 40 lines. Blanking is used to eliminate trace return lines. Trace length shall be adjusted to 3.5 inches (89mm). Raster is expanded and number of lines determined. Focus electrode is adjusted for best focus at the center of the raster. Backing electrode is erased to cutoff and G_1, writing gun, is pulsed to write a single raster. Last step is repeated moving the lines progressively closer together until the individual lines in the written raster cannot be discerned visually. As the lines approach the merging condition, the grid pulse amplitude shall be adjusted to give 50% written saturation luminance. When the specified brightness is achieved and the lines cannot be discerned visually, the condition for visually limited contrast ratio exists, and the resolution measured at this condition is the limiting resolution.

The resolution in lines per inch (lines per mm) is the number of horizontal lines counted when the raster was expanded divided by the height of the compressed raster.

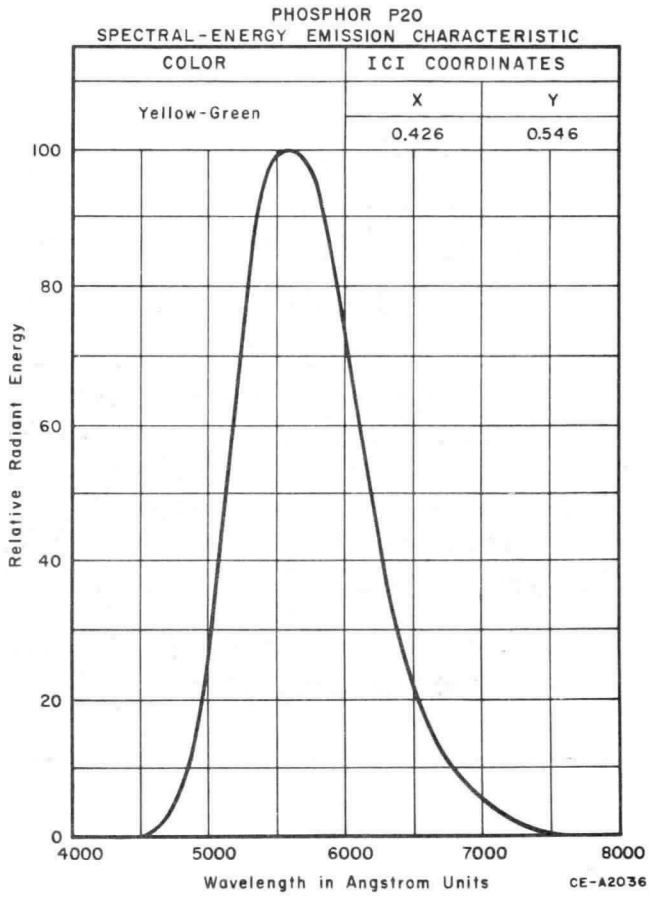

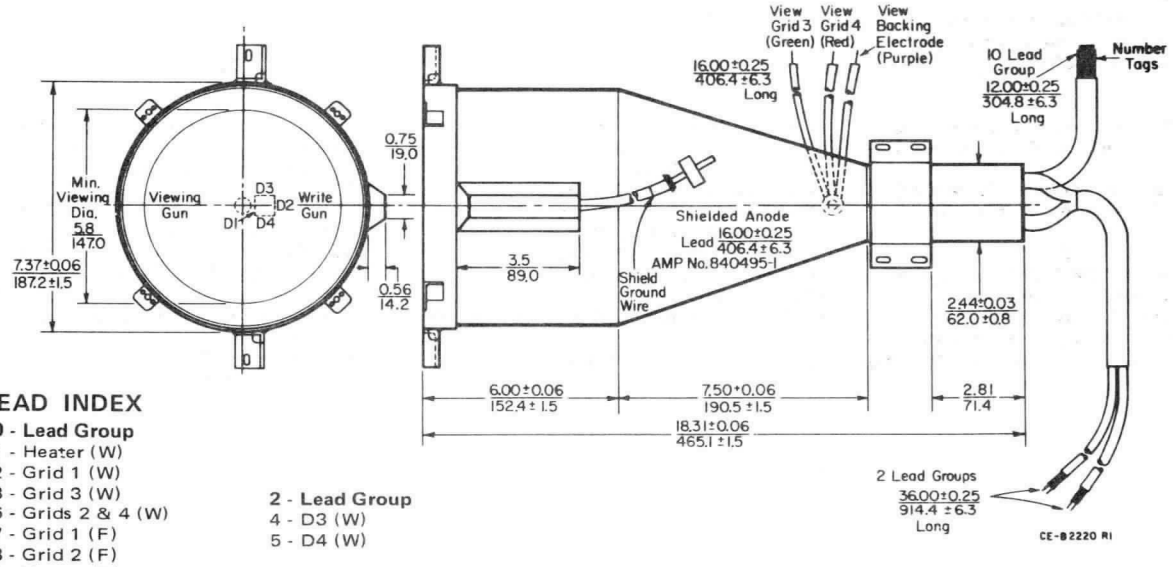

LEAD INDEX

10 - Lead Group
1 - Heater (W)
2 - Grid 1 (W)
3 - Grid 3 (W)
6 - Grids 2 & 4 (W)
7 - Grid 1 (F)
8 - Grid 2 (F)
9 - Heater (F)
10 - Heater & Cathode (F)
13 - Cathode (W)
14 - Heater (W)

2 - Lead Group
4 - D3 (W)
5 - D4 (W)

2 - Lead Group
11 - D1 (W)
12 - D2 (W)

(Dimensions in $\frac{\text{inches}}{\text{mm}}$ unless otherwise shown) The millimeter dimensions are derived from the original inch dimensions, 1″ = 25.4 mm exactly.

Display Storage Tube

Type: WX-30154
One Writing Gun

5.8″ (147mm) Display Diameter
Electrostatic Focus & Deflection
45 Lines/Inch (1.8 Lines/mm) Resolution
5 x 10^4 Inches/Second (1.3 x 10^6 mm/Second) Writing Speed

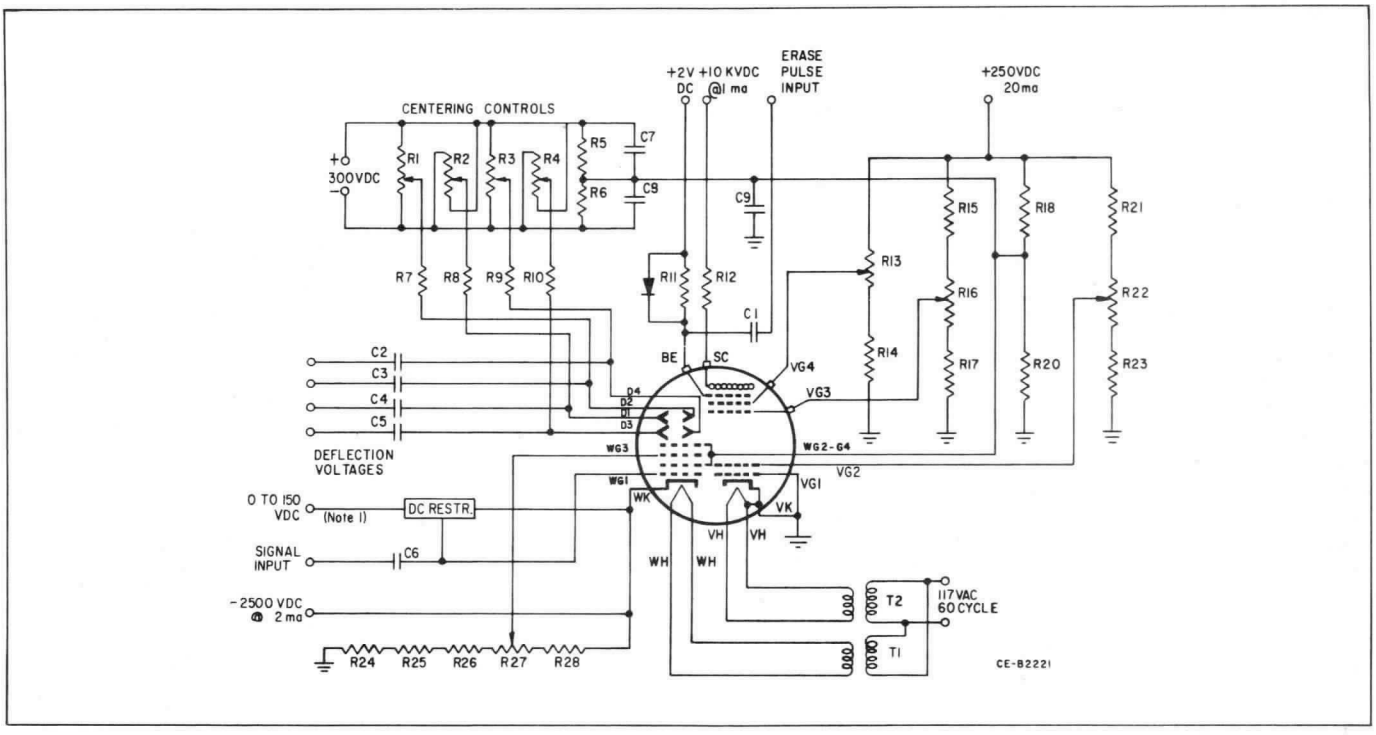

Circuit Note

1. Voltages are with respect to writing-gun cathode. Entire supply must be insulated from ground for 4000 volts.

Parts List

R1, R2: Write Gun D1 & D2 Centering Controls: Dual 1 Megohm Potentiometers, 2 Watts.
R3, R4: Write Gun D3 & D4 Centering Controls: Dual 1 Megohm Potentiometers, 2 Watts.
R5, R6: 1 Megohm, 0.5 Watt.
R7, R8, R9, R10: 1000,000 Ohm, 0.5 Watt.
R11: 50,000 Ohm, 0.5 Watt.
R12: 1 Megohm, 5 Watts.
R13, R16, R22: Collector, Collimating and Electrode Controls: 25,000 Ohm Potentiometers, 1 Watt.
R14: 56,000 Ohm, 2 Watts.
R15: 47,000 Ohm, 2 Watts.
R17: 12,000 Ohm, 0.5 Watt.
R18: 39,000 Ohm, 2 Watts.
R20: 15,000 Ohm, 2 Watts.
R21: 50,000 Ohm, 1 Watt.
R23: 10,000 Ohm, 0.5 Watt.
R24, R25: 1.2 Megohms, 1 Watt.
R26: 1 Megohm, 1 Watt.
R27: Focus Electrode Control 500,000 Ohm, Potentiometer 1 Watt.
R28: 750,000 Ohm, 0.5 Watt.
T1: Filament Transformer: Primary - 117 Volts; Secondary-6.3 Volts @ 1 Ampere, Insulated for 4000 Volts.
T2: Filament Transformer: Primary - 117 Volts; Secondary-6.3 Volts @ 1 Ampere.
C1: 0.1 μfd, 200 Volts.
C2, C3, C4, C5: Value Depends on Deflection-Voltage Frequency and Waveform.
C6: Value Depends on Signal-Voltage Frequency and Waveform, 4000 Volts.
C7, C8: 0.05 μfd, 600 Volts.
C9: 0.5 μfd, 600 Volts.

Westinghouse Electric Corporation
Electronic Tube Division, Elmira, N. Y. 14902
Printed in U. S. A.

MULTICOPY READOUT SIGNAL STORAGE TUBE TYPE WX-30223

The WX-30223 is a small (1" dia. x 6.625" long) electrical-in, electrical-out storage tube for use in equipment requiring minimum size, weight and power. The WX-30223 has 450 TV lines limiting resolution with standard TV frame rate and raster. Maximum voltage required is approximately 375 volts and a 6.3 volt, 150 ma. heater can be supplied to further reduce overall power required. This tube may be operated with modified electrostatic vidicon circuitry.

The WX-30223 performs well in scan-conversion, electronic delay-line and data storage applications.

ELECTRICAL

Cathode	Coated Unipotential
Heater:	
Voltage	6.3 ± 10% Volts
Current (Note 1)	0.60 Ampere
Direct Interelectrode Capacitances:	
Grid 1 to All Other Electrodes	10 pF
Signal Electrode to All Other Electrodes	4.5 pF
Deflection Plate to All Other Electrodes	6.0 pF
Focusing Method	Electrostatic
Deflection Method	Electrostatic

MECHANICAL

Overall Length	6 5/8" ± 1/16"
Bulb Diameter	1.020" + 0.030" - 0.035"
Operating Position	Any
Base	13-Pin Button Base
Socket	13-Contact, Cinch #203-62-13-031 or equiv.
Net Weight	2.6 Ounces

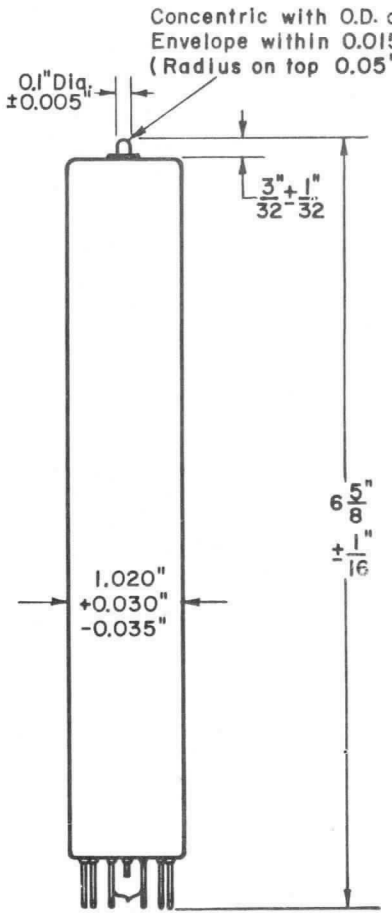

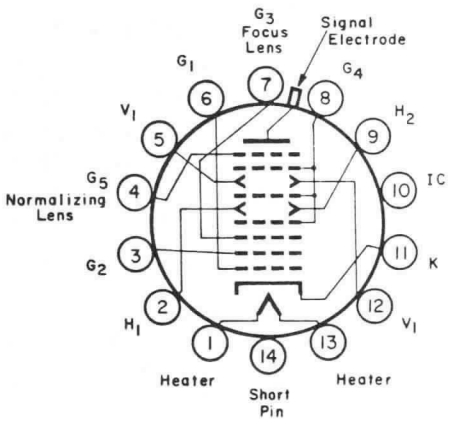

Δ The WX- number identifies a specific laboratory design; the design and, consequently, the data and type number are subject to change. No obligations are assumed to manufacture this particular device in the future unless otherwise arranged. These drawings and specifications are the property of Westinghouse Electric Corporation, Electronic Tube Division, and shall not be reproduced or copied or used as the basis for the manufacture or sale of apparatus and/or devices without permission.

MAXIMUM RATINGS

Absolute Maximum Values

Signal Electrode Voltage	500 max. Volts
Grid 5 Voltage	1000 max. Volts
Deflection Plates (d-c)	750 max. Volts
Grid 4 Voltage (Note 2)	750 max. Volts
Grid 3 Voltage (Focus)	200 max. Volts
Grid 2 Voltage	750 max. Volts
Grid 1 Voltage:	
Negative Bias Value	125 max. Volts
Positive Bias Value	0 max. Volts
Heater-Cathode Voltage:	
Heater Negative with respect to Cathode.	125 max. Volts
Heater Positive with respect to Cathode.	10 max. Volts
Faceplate Temperature	90 max. °C

TYPICAL OPERATION

Signal Electrode Voltage	See Note 3
Grid 5 (Normalizing Lens) Voltage	375 Volts
Deflection Plates	See Note 4
Grid 4 Voltage (Note 2)	250 Volts
Grid 3 (Focus) Voltage	50-80 Volts
Grid 2 (Accelerator) Voltage	250 Volts
Grid 1 Cutoff Voltage.	-45 to -100 Volts
Minimum Peak-to-Peak Blanking Voltage:	
Applied to Cathode	10 Volts
Applied to Grid 1	40 Volts

MAXIMUM ELECTRODE CURRENTS FOR EQUIPMENT DESIGN (Note 5)

Grid Bias: 0 Volts

Raster Size: 3/8" x 1/2"

Signal Electrode Current	0.50 max. μAmpere
Grid 5 Current	3.5 max. μAmpere
Deflection Plates Current	1.5 max. μAmpere
Grid 4 Current	2.0 max. μAmpere
Grid 3 Current	0.030 max. μAmpere
Grid 2 Current	1250 max. μAmpere
Grid 1 Current	2.0 max. μAmpere
Cathode Current	1500 max. μAmpere

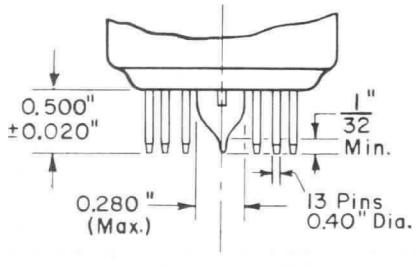

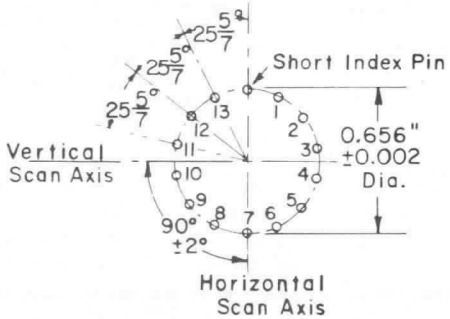

NOTES

1. Can also be supplied with a 6.3 volt, 150 milliampere heater.

2. The Grid 4 consists of the Entrance Aperture, Crosstalk-Reducing Aperture and Post Accelerator.

3. The signal electrode voltage is switched between write and read conditions.

4. The deflection plate mean potential should be kept the same as the Grid 4 voltage.

5. These values are intended to provide information as to the maximum currents required by each electrode, for the purpose of calculating the maximum system power requirements.

NOTES ON OPERATION

The tube has four operational modes: Erase, Prime, Write and Read.

Erase - In the erase mode, previously stored images are removed. This is accomplished by completely scanning the storage surface for a period of about 100 milliseconds with the target backplate raised to grid 5 voltage (375 volts).

Prime - Priming establishes a uniform charge on the storage surface and is done by scanning the storage surface for about 100 milliseconds with the target backplate at + 8 volts.

Write - Writing can be performed by either modulating the beam current (with the grid electrode) or by modulating the target backplate with the beam current maintained at a constant value. The first method requires a modulating voltage of about 50 volts to be applied to grid 1, with the target backplate held at approximately + 20 volts. The second method requires that the target backplate be driven from + 20 volts (beam accepting potential) to -5 volts (beam repelling potential). The writing speed in either mode 800 inches per second (6 frames at 525/30 standards) for high resolution operation. Writing speeds up to 2000 inches per second can be used with consequent decrease in limiting resolution.

Read - To continuously read the stored signal, the backplate is reduced to + 8 volts. The output signal is taken out at the target in the same manner as in a vidicon camera tube. The output signal current increases with beam current to a maximum of 0.5 microamperes. For maximum resolution, the peak signal current should be limited to about 0.1 microampere.

PERFORMANCE

Deflection: The deflection characteristics of the electrostatic multicopy signal storage tube are defined by its deflection sensitivity, deflection linearity and scanning linearity.

Deflection Sensitivity: The deflection sensitivity is shown in Figure 1. The horizontal plates although slightly more sensitive than the vertical plates, require more deflection voltage because of the 4 -to- 3 aspect ratio.

Deflection Linearity: Deflection linearity is the variance in the voltage required to scan a given raster dimension at different locations on the raster. Deflection linearity is within ± 1.2%.

Scanning Linearity: Scanning linearity is the variance in the voltage required to scan an incremental distance along a given horizontal or vertical line. Scanning linearity is within ± 1.1%.

Focus Sensitivity: The focus voltage has a marked degree of control on the resolving power as shown in Figure 2.

Storage Time - A stored signal can be held almost indefinitely (days) providing it is not read out. With the output signal current of 0.1 microampere, the contrast drops by a factor of 2 for a 5 minute readout time. Longer readout times are possible with reduced output signal current.

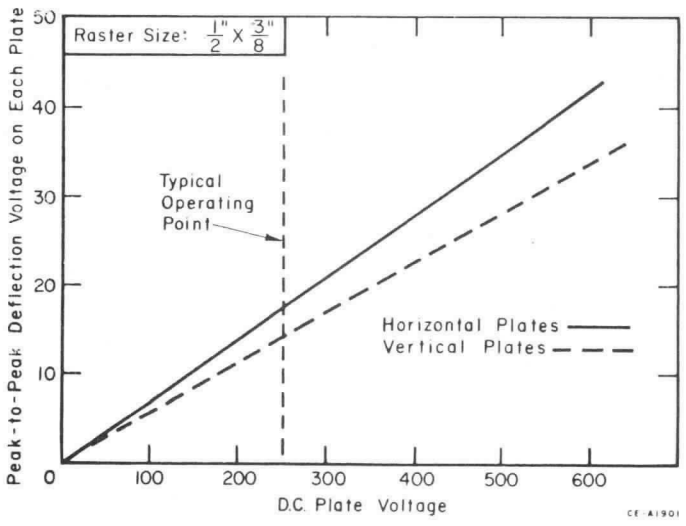

FIGURE 1: DEFLECTION PLATE SENSITIVITY

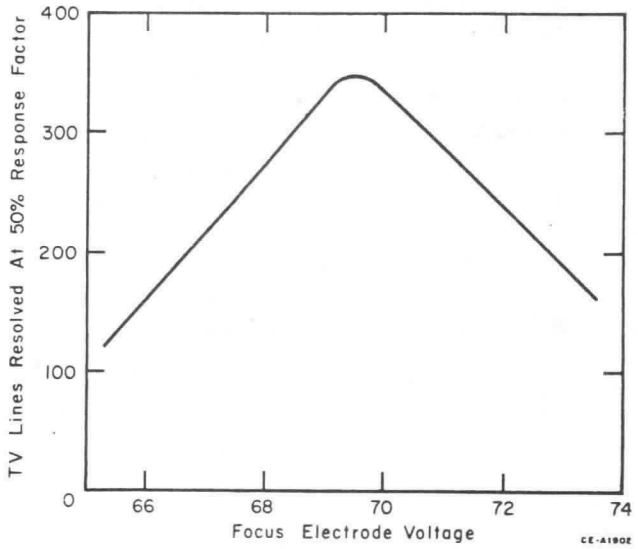

FIGURE 2: TYPICAL FOCUS ELECTRODE SENSITIVITY

Westinghouse

Display Storage Tube

Type: WX-30593★

One Writing Gun
High Contrast

4″ Display Diameter
Electrostatic Focus and Deflection
1000 Foot-Lamberts Display Brightness
60 Lines/Inch Resolution
5 x 10^5 Inches/Second Writing Speed

Application

The WX-30593 direct view storage tube was developed to permit high contrast, high brightness displays in applications which employ fast writing rates. High contrast is obtained by low voltage pulsing of an internal grid.

The high writing speed of the WX-30593 permits presentation of composite displays. A non-storing cursor can be written over stored information, the fast erase time permitting short recycle between read and rewrite. In such a composite mode, the high contrast feature eliminates the bright flash normally associated with single-pulse erase during recycle and permits use of the tube in low brightness ambients where operator dark-adaptation must be retained.

The WX-30593 may also be used in applications which require dynamic control of persistence. This can be achieved by using a continuous pulse train for erasure. The high contrast feature under these conditions permits display of the information against either a black or controlled-brightness background. The high writing speed of the WX-30593 allows time-sharing the single writing gun between signal information and symbology to provide a bright display, free of registration problems.

Factory precollimated to the point of optimum display uniformity, the WX-30593 requires a minimum of setup time at initial installation or during field replacement. An external magnetic shield, bonded to the tube envelope with a non-nutrient silicone rubber compound, prevents disturbance of the precollimated display in stray magnetic fields up to 10 gauss.

Electrical

Storage

Type	Half Tone or Line
Mode	Control of transmission
Erasure	Overall

Write Gun

Cathode			Coated Unipotential	
Heater:	Min.	Nom.	Max.	
Voltage	5.67	6.3	6.93	Volts
Current	0.50	0.60	0.70	Ampere
Focusing Method				Electrostatic
Deflection Method				Electrostatic

Flood Gun

Cathode			Coated Unipotential	
Heater:	Min.	Nom.	Max.	
Voltage	5.67	6.3	6.93	Volts
Current	0.50	0.60	0.70	Ampere
Warm-Up Time	60	—	—	Seconds

Direct Interelectrode Capacitances

All Internal Elements to:

Write Gun Grid 1	10 max. pF
Write Gun Cathode	8 max. pF
D1	10 max. pF
D2	10 max. pF
D3	10 max. pF
D4	10 max. pF
Suppressor Electrode	350 max. pF
Backing Electrode	350 max. pF

Optical

Phosphor	High Visual Efficiency, Aluminized P20
Fluorescence	Yellow-Green
Phosphorescence	Yellow-Green
Persistence	Short
Faceplate	Optical Glass, Ground & Polished Flat

Mechanical

Minimum Useful Viewing Diameter	4″
Maximum Overall Length	15″
Greatest Shield Diameter	5.25″ ± 0.03″
Caps on Large End of Bulb:	
Backing Electrode	EIA J1-22
Suppressor Electrode	EIA J1-22
Positive Input Electrode	EIA J1-22
Base	EIA B14-45
Mounting Position	Any

Environmental Limits

Atmospheric Pressure	60 max. PSI
Altitude (Non-Pressurized)	60000 max. Feet
Temperature:	
Operating	−35 to +71°C
Non-Operating	−62 to +85°C
Relative Humidity (Non-Operating)	95%

Vibration: Sinusoidal vibration from 5 to 18 hertz with a total excursion of 0.30″ and from 18 to 500 hertz with 3G acceleration will not damage the tube.

Absolute Maximum Ratings

Write Gun

Voltages are with respect to Write Gun Cathode

Grids 2 & 4 Voltage (Note 1)	3000 max. Volts
Grids 2 & 4 with respect to Flood Gun Cathode	200 max. Volts
Grid 3 (Focus) Voltage	2000 max. Volts
Grid 3 with respect to Flood Gun Cathode	−2600 max. Volts
Grid 1 Voltage:	
Negative Bias Value	200 max. Volts
Positive Bias Value	0 max. Volts
Positive Peak Value	0 max. Volts
Cathode with respect to Flood Gun Cathode	−2800 max. Volts
Voltage between any Deflection Electrode and Grids 2 & 4	500 max. Volts
Peak Heater to Cathode Voltage	±125 max. Volts

Flood Gun

Voltages are with respect to Flood Gun Cathode

View Screen Voltage	11000 max. Volts
Grid 6 (Suppressor Electrode) Voltage	300 max. Volts
Grid 5 (Backing Electrode) Voltage (200 V. during prime, Note 2)	35 max. Volts
Positive Input Voltage	220 max. Volts
Peak Heater to Cathode Voltage	±125 max. Volts
Grid 1 Voltage	−150 max. Volts

Limiting Circuit Values

View Screen Series Current Limiting Resistance	1.0 min. Megohm
Suppressor Electrode Circuit Resistance	0.1 max. Megohm
Grid 1 Circuit Resistance	1.0 max. Megohm
Deflecting Electrode Circuit Resistance (Note 3)	0.05 max. Megohm

★ The WX-number identifies a specific laboratory design; the design and, consequently, the data and type number are subject to change. No obligations are assumed to manufacture this particular device in the future unless otherwise arranged. These drawings and specifications are the property of Westinghouse Electric Corporation, Electronic Tube Division, and shall not be reproduced or copied or used as the basis for the manufacture or sale of apparatus and/or devices without permission.

November 1968
New Information
S6–3A–11C, S5–10D, WI–1000

Westinghouse

Typical Operating Conditions & Characteristics

Caution: Damage to the tube may occur if the Write-Gun beam is turned on before the Flood-Gun beam current has reached normal operating value, or if the Flood-Gun beam is turned off before the Write-Gun beam. Apply Suppressor voltage before View Screen voltage.

Voltages are with respect to Flood Gun Cathode

Write Gun

Grids 2 & 4 Voltage (Note 1)	110 to 130	Volts
Grid 3 (Focus) Voltage	−1800 to −2100	Volts
Grid 1 Voltage	−2400 to −2475	Volts
Cathode Voltage	−2400	Volts
Grids 2 & 4 Current (Maximum)	1.8	mA
Grid 3 (Focus) Current	−10 to +5	uA
Cathode Current (Maximum)	20	mA
Deflection Factors (Note 4):		
Deflection Electrodes 1 & 2	72 to 88	Vdc/In
Deflection Electrodes 3 & 4	72 to 88	Vdc/In
Focused Beam Position (Note 5)	12	mm

Flood Gun

View Screen Voltage	10000	Volts
Grid 6 (Suppressor Electrode) Voltage:		
Operating Voltage	75	Volts
Cutoff Voltage	−5	Volts
Grid 5 (Backing Electrode) Voltage	12.5	Volts
Positive Input Voltage	200	Volts
View Screen Current	400	uA
Grid 6 (Suppressor Electrode) Current	150	uA
Grid 5 (Backing Electrode) Current	2	uA
Positive Input Current	5.0	mA
Cathode Current	2.0	mA

Notes

1. Adjust for astigmatism control.
2. The tube is said to be primed when the entire surface of the storage dielectric is charged uniformly to flood cathode potential. This operation frees the storage surface of past history. One of the fastest and most effective methods of priming the surface of the WX-30593 is by momentarily switching the backing electrode lead to collector (flood grid 4) potential, leaving it there for no longer than five seconds and then returning it to its own potential of 12.5 volts.

Notes of caution: Because the flood gun beam current bombarding the storage surface reaches a high value during the time when the two electrodes are connected together, they should not be allowed to remain connected for long periods of time (over 5.0 seconds). Leaving the tube in the primed condition for extended periods of time will result in a loss of light output, reduction in viewing duration and irreparable damage to the storage dielectric. Present knowledge indicates that cyclic use of the prime operation is not detrimental. The tube should, however, be operated for at least 6.0 minutes between prime operations to allow for recovery of the storage dielectric from the effects of flood beam bombardment during priming. The backing electrode should at no time during switching periods in the prime cycle be allowed to float free electrically. With these recommendations and cautions, prime can be used.

3. Approximately equal resistances should be used in each deflection electrode circuit.
4. For other values of accelerator voltage, the deflection factor is 32 ± 10% Vdc/In/kV of Grids 2 & 4 to Write Gun cathode voltage.
5. With all deflection electrodes tied to Grids 2 & 4 and erasure at a convenient value, the undeflected, focused spot will lie within a circle of 15 mm radius, centered on the tube faceplate.

Performance Data

See Section on Methods of Measuring Tube Performance

Viewing Time	20	Seconds
Erase Time (Flood Gun Erasure)	15	Milliseconds
Writing Speed	5×10^5	Inches/Second
Half Tones	7	
Brightness	1000	Foot Lamberts
Contrast Ratio (High Contrast Mode)	40:1	
Resolution (Shrinking Raster)	60	Lines/Inch

Methods of Measuring Tube Performance

Viewing Time

Viewing duration is the time required for the visual output of a storage tube to increase from exactly visual extinction to 10% of saturated brightness without the application of a writing signal or erase pulses. The tube is primed and then erased to exactly visual extinction. The erase pulses are removed and the screen brightness allowed to increase. The time required for the brightness level at the center of the screen to increase from visual extinction to 10% of saturated brightness is the viewing duration.

Erase Time

The storage surface is primed to yield a saturated brightness display. Erasure is produced by a single positive rectangular pulse applied to the backing electrode. The pulse amplitude is set to one volt above backing electrode cutoff and the width necessary to to erase from saturated brightness to visual cutoff is the erase time.

Writing Speed

A raster is applied having sweep frequencies and trace length necessary to produce a scanning speed of 5×10^5 inches per second. The focus electrode is adjusted for best focus at the center of the raster. The tube is erased to cutoff and a single raster is written by applying a rectangular pulse of adjustable amplitude to Grid 1 of the writing gun.

The last step is repeated moving the lines of the raster progressively closer together until the individual lines in the written raster cannot be discerned visually. As the lines approach the merging condition, the control grid pulse amplitude is adjusted to give a written raster of 500 foot-lamberts.

Resolution, Shrinking Raster

A 60 Hz sawtooth voltage is applied between deflection electrodes D3 - D4 and a 2100 to 6300 Hz sawtooth voltage is applied between deflecting electrodes D1 - D2 giving a raster of approximately 40 lines. Blanking is used to eliminate trace return lines. Trace length shall be adjusted to 3.5 inches. The raster is expanded and the exact number of lines determined. The focus electrode is adjusted for best display focus at the center of the raster. The display is erased to cutoff and Grid 1 of the writing gun, is pulsed to write a single raster. The last step is repeated moving the lines progressively closer together until the individual lines in the written raster cannot be discerned visually. As the lines approach the

Display Storage Tube

Type: WX-30593★
One Writing Gun
High Contrast

4″ Display Diameter
Electrostatic Focus and Deflection
1000 Foot-Lamberts Display Brightness
60 Lines/Inch Resolution
5 x 10^5 Inches/Second Writing Speed

merging condition, the grid pulse amplitude is adjusted to give a brightness of 500 foot-lamberts. When the specified brightness is achieved and the lines cannot be discerned visually, the resolution measured at this condition is the limiting resolution.

The resolution in lines per inch is the number of horizontal lines counted when the raster was expanded divided by the height of the compressed raster.

Persistence

Persistence is measured by writing a small display area to saturation brightness and measuring the decay characteristic on an oscilloscope with a fast response, eye-corrected spot photometer. For this measurement, the erase format consists of a train of rectangular positive pulses where amplitude equals backing electrode cutoff plus one volt; the suppressor train of rectangular negative pulses of 80 volts amplitude and synchronous with the erase train. The backing electrode and suppressor grid bias levels are 15 and 75 volts respectively. Persistences for duty cycles from 0.3 to 2.0 percent are shown in Figure 1. The decay time of images written to only 50 percent of saturated brightness is approximately 60 percent of that shown for saturated displays.

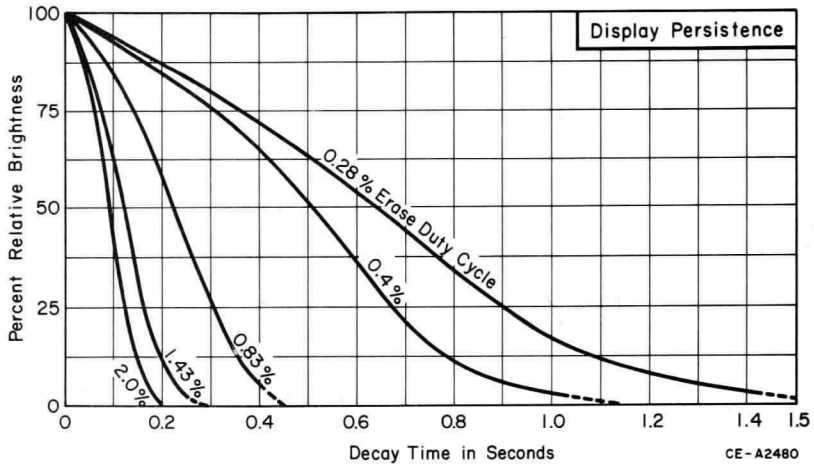

Figure 1

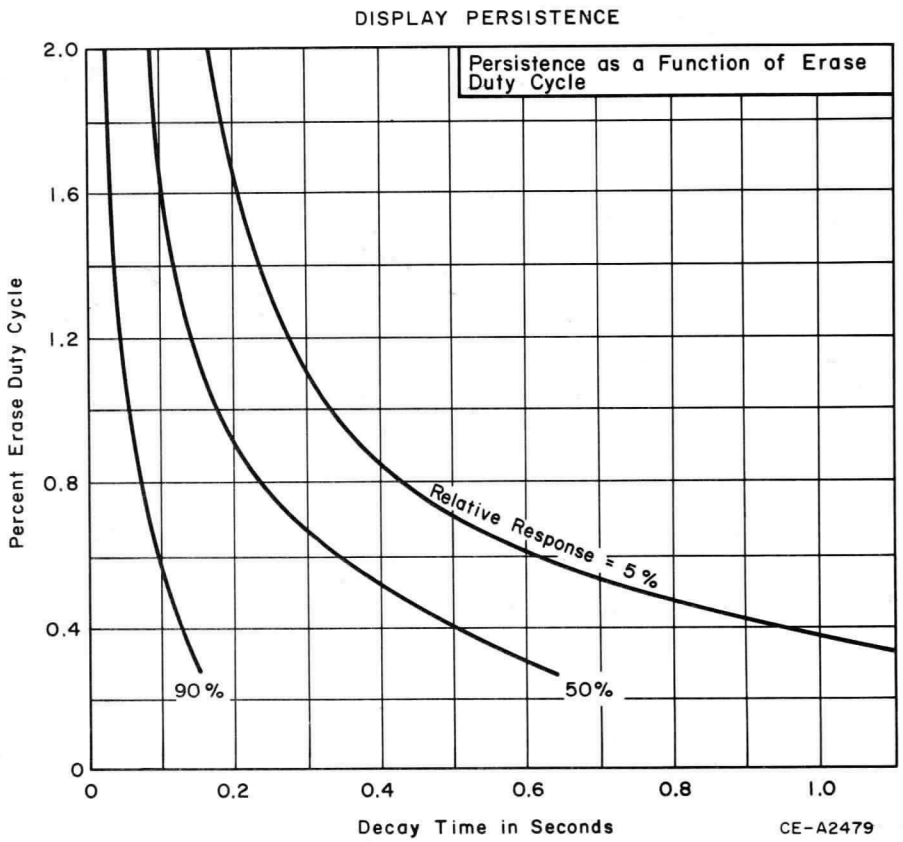

Figure 2

Additional Application Curves

Figure 2. Persistence in terms of Relative Response as Affected by Erase Duty Cycle.

Figure 3. Screen Brightness Variation as a Function of Screen Voltage.

Figure 4. Relative Display Brightness Variation as a Function of Storage Surface Potential.

Display Storage Tube

Type: WX-30593★

One Writing Gun
High Contrast

4″ Display Diameter
Electrostatic Focus and Deflection
1000 Foot-Lamberts Display Brightness
60 Lines/Inch Resolution
5 x 10^5 Inches/Second Writing Speed

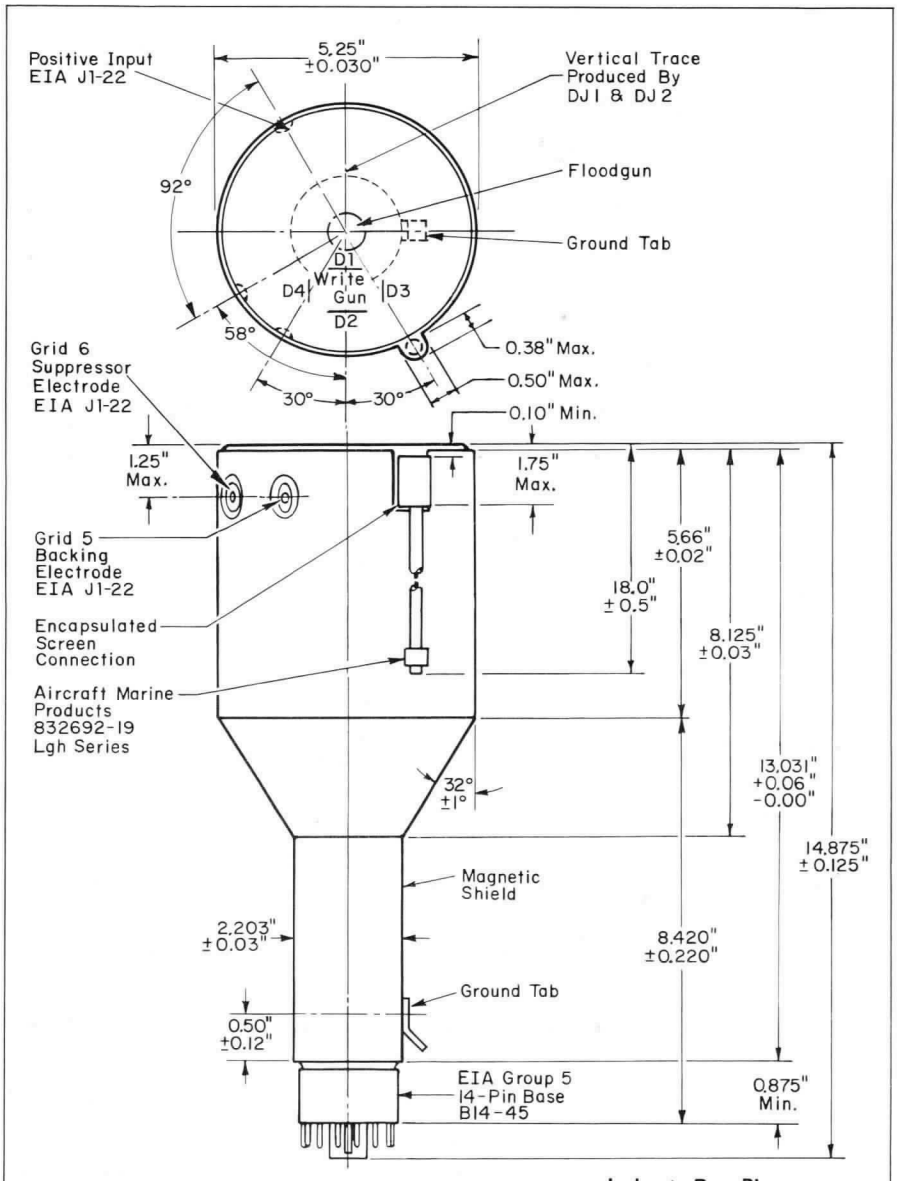

Index to Base Pins

(W) = Write Gun (F) = Flood Gun

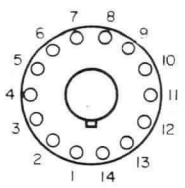

Pin	Element
1	Heater (W)
2	Grid 1 (W)
3	Grid 3 (W)
4	D 3 (W)
5	D 4 (W)
6	Grids 2 & 4 (W)
7	Grid 1 (F)
8	Internal Connection
9	Heater (F)
10	Heater & Cathode (F)
11	D 1 (W)
12	D 2 (W)
13	Cathode (W)
14	Heater (W)

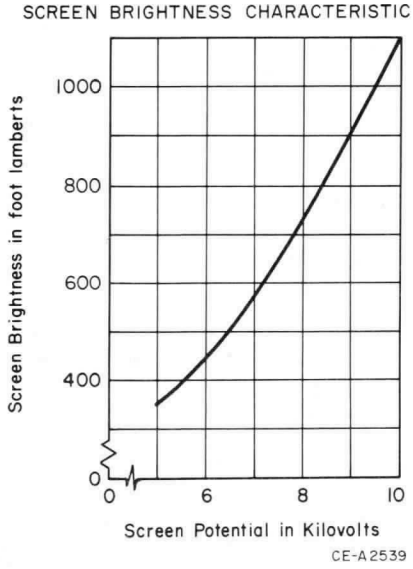

Figure 3

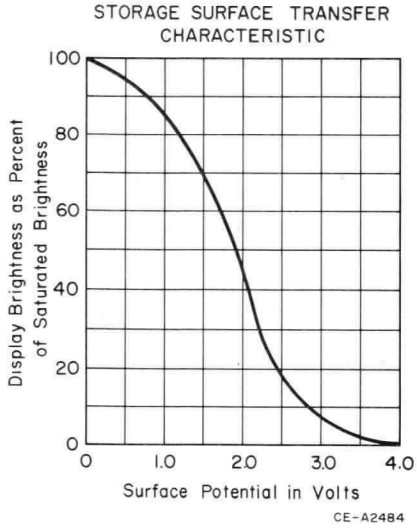

Figure 4

Westinghouse Electric Corporation
Electronic Tube Division, Elmira, N. Y. 14902
Printed in U.S.A.

Westinghouse

WL-30654
SEC Camera Tube

All Magnetic Gun
Electrostatic Image Section
1.6″ Image Diagonal

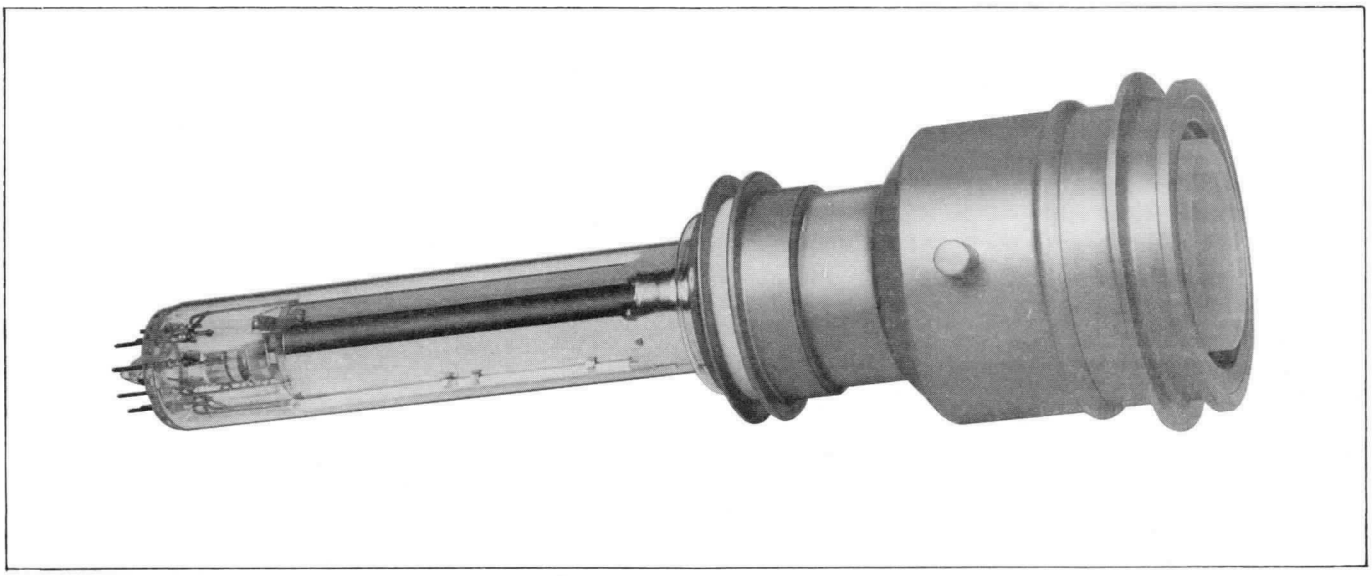

- **High Static & Dynamic Sensitivity**
- **Low Lag**
- **Excellent Integration & Storage**
- **No Halation or Blooming**
- **Broad S-20 Spectral Response**
- **Wide Dynamic Range**
- **Fiber Optic Faceplate**
- **Rugged, Compact Design**
- **Low Power Consumption**
- **Simple Operation**

General Description

The WL-30654 is an SEC camera tube characterized by high sensitivity, good resolution, low lag or persistence and simplicity of operation. The novel feature of the WL-30654 which distinguishes it and other SEC camera tubes from conventional camera tubes is the Secondary Electron Conduction (SEC) target.[1] This target has high gain, excellent storage properties and retains only a very small percentage of its stored signal after a single scan of the reading beam.

Because of the unique properties of the SEC target, the WL-30654 is able to operate over a very wide range of scene illuminations and exhibits excellent sensitivity with moving as well as with stationary scenes. Localized regions of a scene which are sufficiently bright to cause saturation do not produce halation or blooming so that information from surrounding regions is not obscured. The excellent storage characteristics of the SEC target enable the integration of low light level images for extended periods of time. The WL-30654 also performs well at slow scanning rates as well as at the normal scanning rate of 30 frames per second.

The electrostatic image section remains in focus for all photocathode voltages and since the sensitivity of the tube varies with photocathode voltage, this feature provides a convenient means for gain control. Scan power and voltage considerations for the reading gun are similar to those for a standard 1½″ all-magnetic vidicon. Suitable deflection yokes and focus coils are commercially available.

The WL-30654 may be used directly with an optical lens system, or may be fiber-optically coupled to an image intensifier in order to achieve remote viewing at extremely low light levels. Alternatively the WL-30654 may be fiber-optically coupled to a suitable image converter to permit detection of X or UV radiation as well as near infrared radiation.

Principles of Operation

The WL-30654 SEC camera tube is schematically illustrated in Figure 1. It consists of an electrostatically focused diode image section, a Secondary Electron Conduction (SEC) target and a magnetically focused and deflected reading section. The semi-transparent S-20 photocathode is deposited on the inner surface of the plano-concave fiber optic faceplate. An optical image focused onto the plane surface of the fiber optic faceplate, is conveyed to the photocathode where photoelectrons are emitted from the illuminated areas of the image in direct proportion to the amount of incident radiation.

May 1969
Supersedes TD 86-820 dated September 1968
S6–9A–9E, TC–2237

Westinghouse

The photoelectrons are accelerated towards the SEC target where they are brought to focus by the electrostatic lens formed between the photocathode surface and the anode cone. As the electron image is transferred from the photocathode surface to the target, it is reduced in size; the magnification is approximately 0.64.

The SEC target consists of a supporting membrane of Al_2O_3 approximately 500 Å thick followed by a 500 Å layer of aluminum, which forms the signal electrode. Deposited on this, and facing the reading gun, is a highly porous layer of KCl. By applying a positive potential to the aluminum signal plate and stabilizing the potential of the KCl surface at approximately gun cathode potential, (by scanning the KCl surface with the low velocity electron beam), an electric field can be established across the KCl layer.

Photoelectrons arriving at the target with energies of approximately 8 keV penetrate the Al_2O_3 and Al layers and dissipate most of their energy within the KCl layer by generating secondary electrons. An important feature of the SEC target is the release of secondary electrons into the vacuum interstices between the particles of KCl. Under the influence of the internal electric field the secondary electrons migrate in vacuum towards the signal plate. Conduction of the secondary electrons, therefore, takes place in *vacuum* and not in the *conduction band* of the KCl, thus avoiding the persistence effects caused by the trapping and subsequent release of charge carriers by shallow trapping centers. The movement of electrons within the KCl layer towards the signal plate creates a positive charge pattern which, in spacial distribution and intensity, corresponds to the optical image focused onto the tube faceplate. Because of the high resistivity of the low density target, the charge pattern can be stored for long periods of time.

The charging of the KCl layer is periodically interrupted by the scanning beam, which returns the KCl to gun cathode potential by depositing electrons on the positively charged areas. This current pulse, constituting the video signal, is capacitively coupled to the signal plate. The current flowing in the signal plate is used to develop a voltage across a load resistor which, after amplification, can be used to produce a video picture on a television monitor in the usual manner.

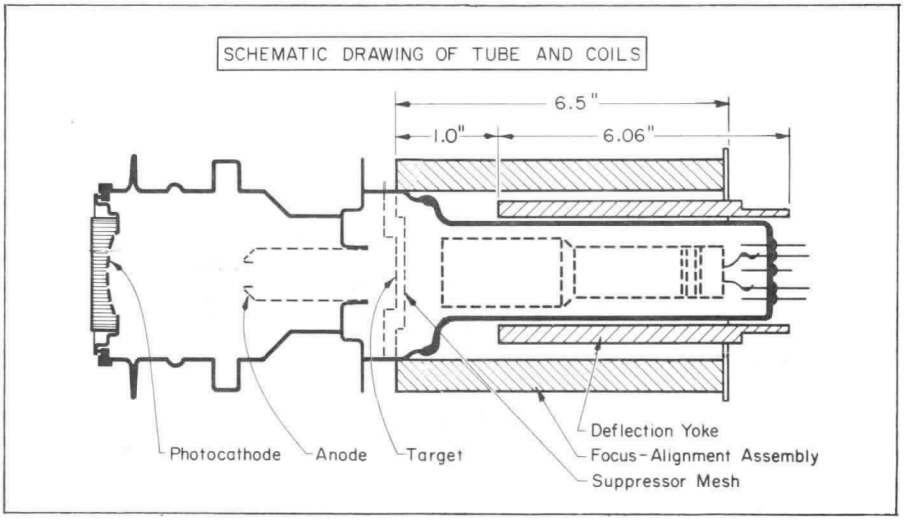

FIGURE 1

The low velocity electron beam which scans the target is produced by an electron gun consisting of an indirectly heated thermionic cathode, a control grid (G1), and an accelerating grid (G2). The beam is focused at the surface of the target by the combined action of the uniform magnetic field of an external coil and the electrostatic field of G3. A field mesh (G4) serves to provide a uniform decelerating electrostatic field to the target.

A second mesh electrode, G5 (suppressor mesh) is positioned close to the target surface. The purpose of this mesh is to control the potential of the SEC target. It is normally operated at a potential just below the "cross-over" potential for KCl (approximately 15 volts). Alignment and deflection of the beam is accomplished by transverse magnetic fields produced by external coils. (See Figure 1).

Performance Data

General

Specific performance parameters are discussed in the paragraphs that follow. For parameters where the performance varies from tube to tube, both a minimum and a typical value are given. The minimum value means that all tubes will equal or exceed that performance. The typical value is obtained by averaging a given performance parameter over a large number of tubes. Thus any given tube will provide at least minimum performance for all parameters and may provide typical performance for one or more parameters.

Spectral Response and Sensitivity

The WL-30654 employs an S-20 photosurface deposited on a dark clad, fiber optic faceplate. A typical spectral response for this faceplate-photosurface combination is shown in Figure 2. The peak quantum efficiency ranges from 15 to 20% and falls within the wavelength interval of 4200 to 4600 Å.

The high quantum efficiency of the S-20 photocathode and the high gain of the SEC target provides a typical sensitivity of 120μA/fc, minimum 90μA/fc, at a faceplate illumination of 10^{-3} fc (See Figure 3). Since the optical image size is 0.96" x 1.28" this corresponds to a typical sensitivity of 14,000μA/lm.

Light Transfer Characteristic

The light transfer characteristics of the WL-30654 are shown in Figure 3. The gamma varies from nearly one at lower light levels to about 0.6 at light levels of from 10^{-3} to 10^{-2} fc. At higher light levels, the target saturates at a surface voltage essentially equal to that of the suppressor mesh (G5). Although this provides a "knee" in the transfer curve, the light levels associated with the "knee" may cause image "burn-in" after prolonged exposure (see paragraph titled "Maximum Exposure Levels"). However, the tube may be safely operated at this and higher light levels by reducing the photocathode voltage.

The transfer function of Figure 3 applies for a standard 1/30 second frame rate, 525 line

WL-30654
SEC Camera Tube

All Magnetic Gun
Electrostatic Image Section
1.6" Image Diagonal

interlaced scan with both the photocathode and target voltages adjusted for optimum performance. Under these conditions the tube will provide a typical high-light signal current of 325 nA (minimum 250 nA). At full gain the peak signal to rms noise ratio, limited primarily by photon shot noise is about 30 for a bandwidth of 8 MHz. At reduced gain, the signal to noise ratio is limited primarily by the preamplifier noise current. In this mode of operation a signal to noise ratio of about 65 can be obtained if a suitable preamplifier is used (see section entitled "Systems Considerations"). (The equivalent visual signal-to-noise ratio[2] is about 200 or 46 db.) These signal-to-noise ratios correspond to a dynamic range extending over two orders of magnitude in light level.

The excellent storage characteristics of the target make the WL-30654 ideally suited to slow scan applications. The narrow bandwidths associated with slow scanning provide smaller noise currents. However, this advantage is offset by the fact that with continuous slow scanning the highlight signal current is reduced in proportion to the increase in frame time. This reduction in highlight signal current can be avoided by using digital scanning techniques where the beam rapidly scans a single resolution element and is then brought to rest before being pulsed to scan the following resolution element.

The gain of the SEC target increases with target voltage. Dark current is non-existent over the entire range of useful target voltages. Practical limits to the maximum target voltage are imposed by the onset of lag and the appearance of target grain. The optimum target voltage is specified in the test data supplied with each tube. Although some degree of gain control can be achieved by operating the target at lower voltages, this approach is not recommended because the storage capacity and, therefore, the highlight signal current decreases with decreasing target voltage.[3]

Gain Control

Effective gain control can be accomplished by varying the photocathode voltage. The relative small signal target gain, as a function of photocathode voltage, is shown in Figure 4. Varying the photocathode voltage from 3.5 to 7.5 kV provides a gain control range of at least 15 to 1 with no perceptible loss in resolution and an image rotation of about 1°. A larger range can be obtained by further reducing the photocathode voltage; however, the picture quality is gradually degraded by the appearance of grain.

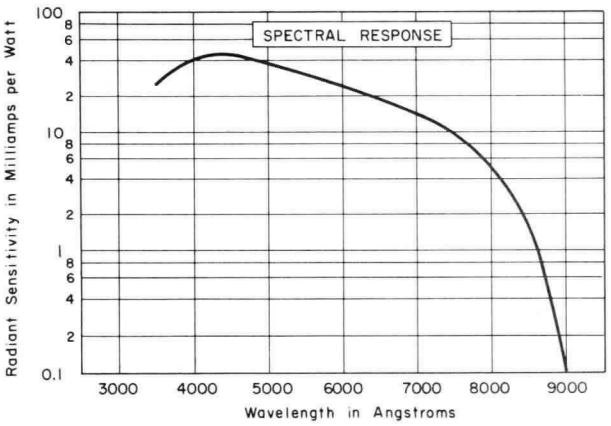

FIGURE 2

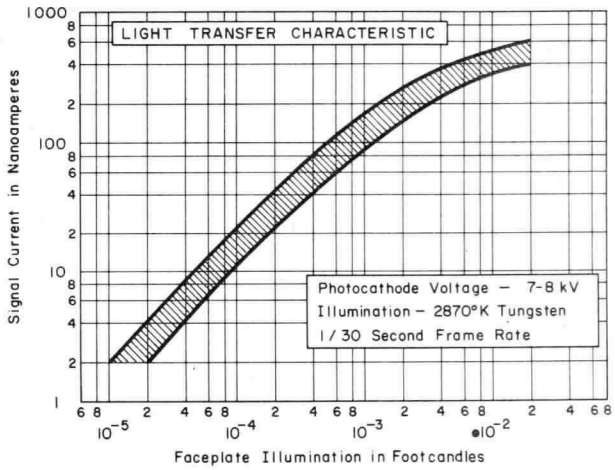

FIGURE 3

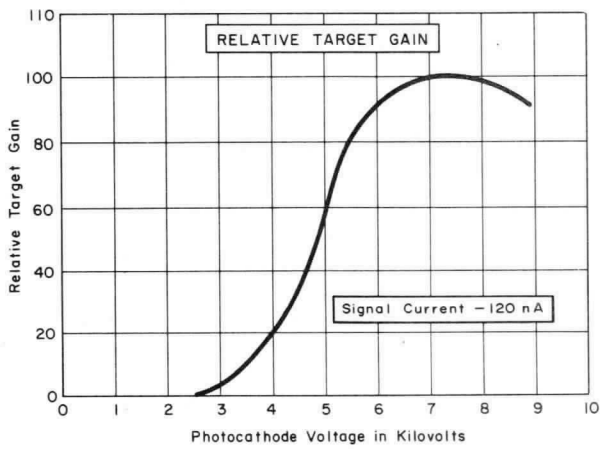

FIGURE 4

Westinghouse

Resolution

Figure 5 shows the uncompensated square wave response for the WL-30654. The curve given for the corner[4] is obtained when the tube is adjusted for best center resolution. The corner resolution can be improved to approximately match that of the center by dynamically focusing the G3 electrode with a suitable waveform of approximately 10 volts amplitude.

Values for the center square wave amplitude response at 200 and 400 TV lines per picture height are typically 70% and 35% with minimum values of 65% and 30% respectively. No significant variation in the modulation transfer function occurs for photocathode voltages ranging from approximately 3.5 to 8 kV. With a well-designed preamplifier, the typical limiting resolution is 800 TV lines per picture height at the center and 500 TV lines in the corner.

Lag Characteristics

The signal generating mechanism of the SEC target is essentially lagless because conduction of the secondary electrons across the storage layer takes place in vacuum rather than in the conduction band. The small amount of lag that is observed is believed to be caused by the stored charge residing within the KCl layer rather than on the surface. This limits the beam acceptance resulting in a discharge lag. At higher target voltages, the stored charge penetrates further into the layer resulting in increased lag. Figure 6 shows the lag characteristic for a typical tube operated at optimum target voltage and at a signal current of 200 nA.

In the first frame, more than 90% of the signal is read out, leaving less than 10%, typically 5% to be read out in the second frame. In the third and succeeding frames, the residual signal is unperceptible. This performance is significantly better than that of the 1½" vidicon where typically, the signal does not decay to 3% until approximately the tenth frame. The dependence of lag on signal current is shown in Figure 7. At lower light levels, the lag increases primarily because of the poorer beam acceptance associated with the lower voltage excursions on the target surface.

The relative freedom from lag provides the WL-30654 with a dynamic sensitivity which is only slightly less than its static sensitivity. This is illustrated in Figure 8 which shows the limiting resolution as a function of light level for

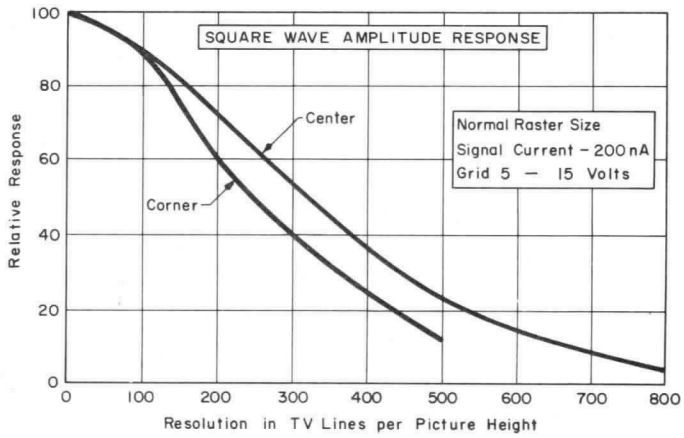

FIGURE 5

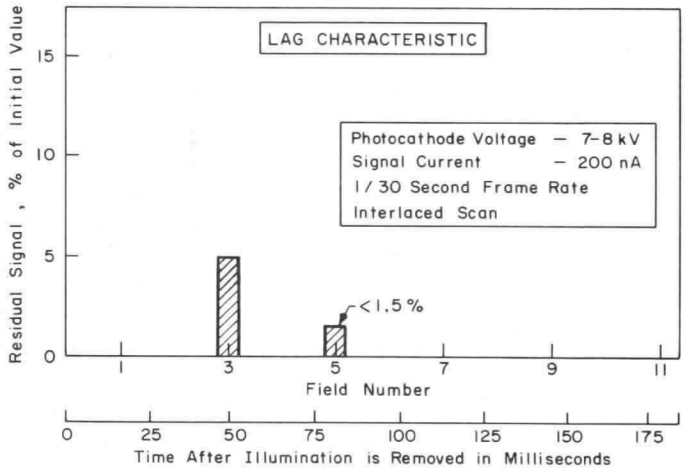

FIGURE 6

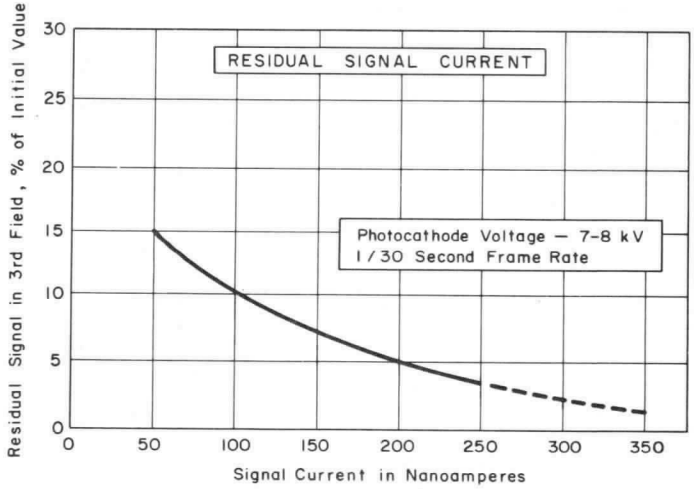

FIGURE 7

WL-30654
SEC Camera Tube

All Magnetic Gun
Electrostatic Image Section
1.6" Image Diagonal

both stationary and moving scenes. In one case, the image moved across the picture width in a 20-second period. In order to obtain the same resolution with the dynamic scene, it is necessary to increase the light level by about a factor of 3.5. Under similar circumstances, the image orthicon requires an increase in light level of about a factor of 100.[5]

Low Contrast Sensitivity

The sensitivity illustrated in Figure 8 was concomitant with a 100% scene contrast. However, in most practical applications, the scene contrast is considerably less than 100% and, in such cases, the sensitivity of the tube to low contrast scenes becomes very important. The low contrast sensitivity of the WL-30654 is excellent and is shown in Figure 9. Over the linear region of the characteristic, where preamplifier noise predominates, the illumination required to achieve a given resolution is approximately inversely proportional to the contrast. At higher light levels, where photon shot noise is predominant, this relationship approximates an inverse square dependence. The performance of the WL-30654 compares favorably with that of the image orthicon. For example, at a resolution of 400 TVL/picture height, an increase in illumination of about 14 times is required compared to 4 for the SEC tube when the contrast is reduced from 100% to 25%.

Point Source Imaging

Point source imaging characteristics have been measured for a number of different SEC camera tube types, and have been found to be substantially independent of the tube type.[6] Both the sensitivity, that is the minimum number of radiation quanta sufficient to produce a signal detectable on a television monitor, and the dynamic range of point source detection are important parameters.

The WL-30654, operating in a system with a 3 nA noise current, can detect a signal of about 600 photoelectrons per integration period. For a photocathode with a 15% quantum efficiency, this would correspond to the arrival of 4000 photons at the faceplate of the tube. No significant deviations from perfect reciprocity occur for integration periods of at least several minutes (See Figure 10). Increased threshold sensitivity may be achieved by increasing the target voltage by approximately 2 volts between integration and read out of the stored signal. In this way the beam resistance is reduced and the co-planar biasing caused by the

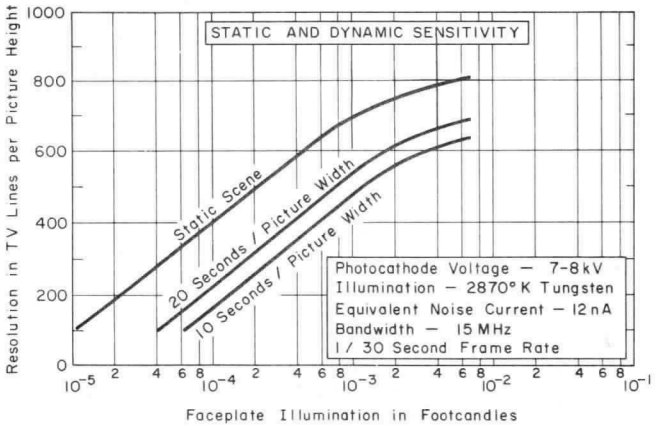

FIGURE 8

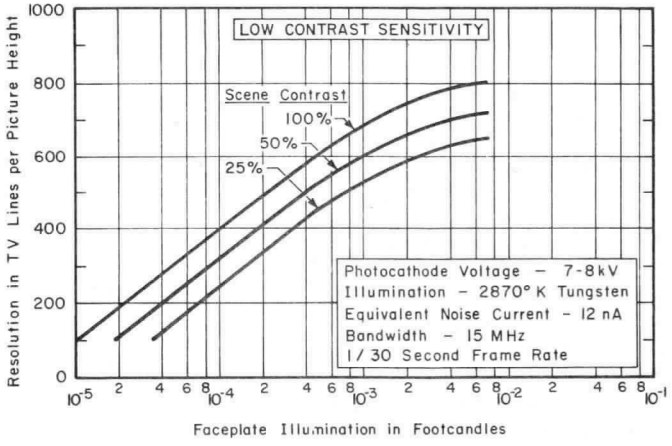

FIGURE 9

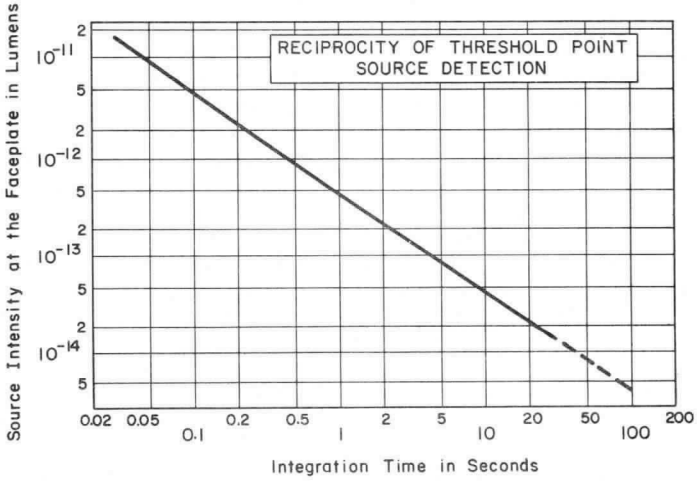

FIGURE 10

Westinghouse

negatively charged unexposed areas of the target can be eliminated.

The dynamic range is limited by the point at which physical spreading or blooming of the point image becomes "objectionable". Figure 11 shows the dependence of the diameter of the image point on the intensity of the source. The curve compounds the results of a number of independent measurements and shows that the diameter of the point image varies approximately with the 0.2 power of the source intensity. For example, the diameter of the point image increases by a factor of approximately six when the source intensity increases from threshold by a factor of four orders of magnitude. This performance may be contrasted with that of the image orthicon where the same degree of point spreading occurs for only one order of magnitude in intensity above the threshold.[7]

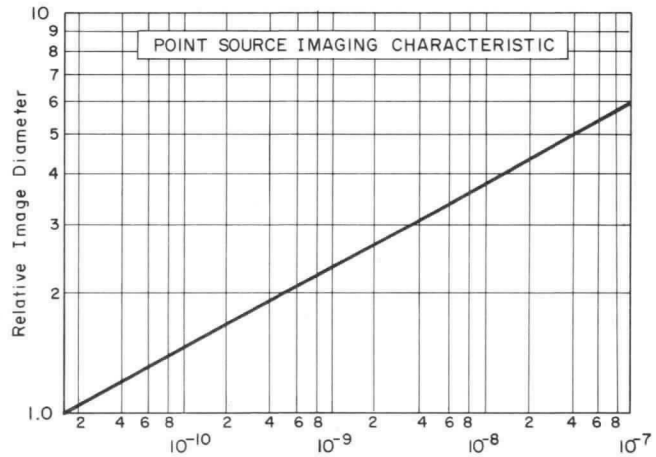

FIGURE 11

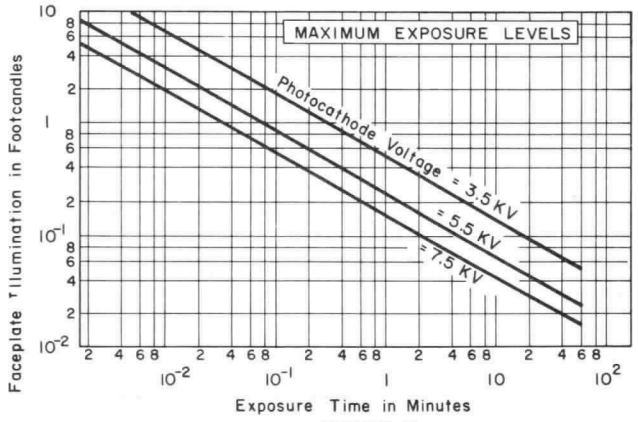

FIGURE 12

Integration and Storage

The SEC target used in the WL-30654 has an extremely high resistivity. Thus a signal can be integrated over a period of several minutes without degradation due to target leakage. The maximum integration period is limited only by spurious emission in the image section of the tube which, after long periods, can saturate the target. With selected tubes, integration times of up to thirty minutes are possible. Throughout the entire exposure, the tube shows excellent reciprocity in light level and exposure time. The ability to integrate over such long periods effectively increases the sensitivity of the tube by a factor of several thousand without compromising other performance parameters.

Once a signal has been integrated, it can be stored for many hours provided the photocathode voltage is turned off. The stored signal can then be read out in essentially one frame at any convenient scan rate.

Maximum Illumination Levels

If an excessive amount of energy is dissipated in the SEC target, the target suffers a loss of gain, resulting in a permanent negative image (burn-in). Damage can be caused by either an excessive target voltage or by unduly high light levels. In the first case, damage can be avoided by maintaining the target voltage at or below the value recommended in the data supplied with the tube. Damage associated with high light levels also depends on the photocathode voltage and the exposure time. These relationships are illustrated in Figure 12. The curves represent the maximum energy exposure that can be tolerated without danger of permanent target damage for various photocathode voltages. For example, at a photocathode voltage of 5.5 kV, a high light photocathode illumination of 1/5 footcandle can be tolerated for periods of up to 1 minute without "burn-in". For a lens at f/11 this illumination corresponds to a scene brightness of about 120 fL. Longer exposure times may result in permanent damage. It should be noted that, in most cases, exposures at or near those described by the curves of Figure 12, may cause a temporary loss in gain. However, recovery is complete within a period of several minutes.

Uniformity and Distortion

Shading in the WL-30654 is caused mainly by the slight radial change in magnification in the image section. The photocurrent density incident on the target varies with the square of the magnification. Since the magnification is slightly larger at the edges, the current density there is reduced, resulting in a lower signal current. The video signal uniformity, defined as the percentage deviation from the maximum signal level, is typically 25%. It is measured across a horizontal line at the center of the picture.

Geometric distortion is typically 2%. It is measured with EIA linearity chart in accordance with IEEE Standard Number 202.[8]

Picture Quality

Over the recommended operating ranges of the WL-30654, there are no signal redistribution effects so that a signal in a given area is essen-

WL-30654
SEC Camera Tube

All Magnetic Gun
Electrostatic Image Section
1.6" Image Diagonal

General Data

Faceplate ..... Fiber Optic
Useful Diameter .. 1.6 Inches (40mm)
Photocathode..... S-20 (Figure 2)
Image Section:
Focusing Method ..... Electrostatic
Configuration ..... Diode
Target Shunt Capacity:
Typical ..... 35 pF
Maximum ..... 40 pF
Reading Section:
Focusing Method ..... Magnetic
Alignment Method ..... Magnetic
Focusing-Alignment
Assembly 15-VFA-599X*
..... or Equivalent
Deflection Method ..... Magnetic
Deflection Yoke 15-VY-314*
..... or Equivalent
Cathode ..... Indirectly Heated
Heater Power ..... 1 Watt
Base .....JEDEC No. E8-78
Socket ..... #208-SBSDC (Alden)
Overall Length ..... 13.5 Inches
Maximum Diameter ..... 4.03 Inches
Diameter of Reading:
Gun Bulb ..... 1.5 Inches
Weight ..... 1.3 Pounds
Operating Position ..... Any

* Cleveland Electronics, Inc.

Operational Data	Maximum Rating	Typical Operation	Units
Image Size at the Faceplate: 0.96" x 1.28"			
Direction of Scan: Parallel to a Line Joining Axis of Tube to Target Lead.			
Photocathode Illumination	See Figures 3 and 12		
Photocathode Voltage	−9	−7.5	Kilovolts
Anode Cone Voltage	NA*	Ground	—
Target Voltage (Reference 9)	30	10 to 30	Volts
Grid 5, Suppressor Mesh, Voltage (Reference 10)	40	15	Volts
Grid 4, Field Mesh, Voltage (Reference 11)	1500	600	Volts
Grid 3, Focus Electrode Voltage	1500	480	Volts
Grid 2, Accelerator, Voltage	350	300	Volts
Grid 1 Voltage	−150 +0	−40	Volts
Heater Voltage	6.9	6.3	Volts
Peak Heater to Cathode Voltage:			
Heater Negative	125	NA*	Volts
Heater Positive	10	NA*	Volts
Minimum Peak-to-Peak Blanking Voltage Applied To:			
Cathode (Positive Pulse)	NA*	30	Volts
Grid 1 (Negative Pulse)	NA*	80	Volts
Cathode Voltage	NA*	Ground	—
Magnetic Focusing Field (Center of Coil)	NA*	30	Gauss
Magnetic Alignment Field	NA*	0 to 4	Gauss
Peak Deflection Current for Specified Yoke:			
Horizontal	NA*	300	mA
Vertical	NA*	32	mA
Peak Signal Current (Reference 13)	1	NA*	μA

* Not Applicable

tially independent of the signal in a neighboring area. Thus, the tube is free of halation. Slight blooming, or image growth, occurs at very high light levels due to the beam bending associated with excessive voltage excursions at the target surface.

All tubes are free of fixed pattern noise, such as smudges or demarcation lines. The maximum number and distribution of small area blemishes are defined in the table below:

	Zone 1	Zone 2	Zone 3
All Blemishes	1	3	20
Blemishes with a major dimension of 7 or 8 television lines	0	1	4

The zones are defined as follows:

Zone 1 ..... Central 10% of raster area.
Zone 2 ..... Central 20% of raster area.
Zone 3 ..... Entire raster area.

These blemishes are generally bright spots and are defined as any spurious signal whose major dimension covers three or more television lines. No blemish whose major dimension covers nine or more television lines is permitted anywhere in the raster.

Life and Environmental Characteristics

The WL-30654 has been used in various applications and has shown useful life times of 500 hours or more, comparable to vidicons and image orthicons. It does not require an extended warm-up period and shows highly reproducible performance even at operating temperatures as low as −54°C or as high as +55°C. The only performance parameter which may change with extended operation is sensitivity which decreases at most by one f-stop. When stored under suitable conditions, e.g. a clean dry environment at room temperature, the tube remains stable and shows an extremely long shelf-life.

The WL-30654 has been designed for use in systems which must operate under the environmental conditions described in military specification Mil-E-5400K. The rugged design of the tube is compatible with even the most severe vibration levels, (curve IV, of the specification). However, care must be taken in the design of the camera head to ensure that resonances, which could produce microphonics, are avoided.

Operating and Handling Considerations

Important Precautions

1. *The tube is supplied with an external voltage limiting device connected between the SEC target and the suppressor mesh (G5). This should not be disconnected, as its purpose is to protect the target from permanent damage which could be caused by the accidental application of a high voltage (e.g. from an electrostatically charged human operator).*

2. *The target and suppressor voltages recommended with each tube should not be exceeded.*

3. *The tube should not be operated at exposure levels greater than those illustrated in Figure 12.*

4. *The horizontal and vertical deflection power should be adjusted to ensure that the target is either normally scanned or over-scanned before the reading beam is turned on. Avoid Underscanning.*

Westinghouse

Set-up Procedure

As long as the above precautions are taken, the tubes can be set up and operated in a manner similar to that of a vidicon. No special "warm-up" time is required. The sequence given below is recommended as a convenient set-up procedure.

1. Install the tube in the camera head using the focus, deflection, and alignment coil positions shown in Figure 1. The polarity of the focusing coil should be such that an externally positioned north seeking pole is attracted to the target end of the focusing coil. It is also recommended that a 1.6" diagonal rectangular mask with a 4:3 aspect ratio be used to prevent light reaching unused parts of the photocathode.
2. Make connections to all electrodes and apply deflection voltages sufficient to over scan the target.
3. Apply maximum negative bias to G1. Apply voltages to the heater, focusing coil and alignment coils.
4. Apply the recommended voltages to G2, G3, G4, G5, and target.
5. Apply approximately 10^{-4} fc uniform illumination to the faceplate of the tube. Turn on photocathode voltage and adjust the G1 voltage until the beam current is sufficient to discharge the target.
6. Center and focus a test pattern on the faceplate of the tube so that the image size is 1.28" x 0.96". The illumination level should be adjusted to about 10^{-3} fc.
7. Adjust the deflection amplitude and centering controls such that the target ring is just visible in the corners of the picture. Then further decrease the deflection power until the test chart completely fills the picture.
8. Adjust the G3 beam focus control and optical focus alternately until no further improvement in picture quality is obtained. The G4 voltage should always be maintained above that of G3 to prevent positive ions generated in the G3 drift space from landing on the target.
9. Adjust alignment currents for best beam landing in the following manner. Reduce the G5 voltage to a value just above the threshold for beam landing. Adjust the alignment current to center and maximize the area over which the beam can land. If a G5 voltage of more than 1 or 2 volts is needed for beam landing over the entire raster, check the positions of the focusing and deflection coils.
10. Return G5 voltage to recommended value, check G3 and optical focus.

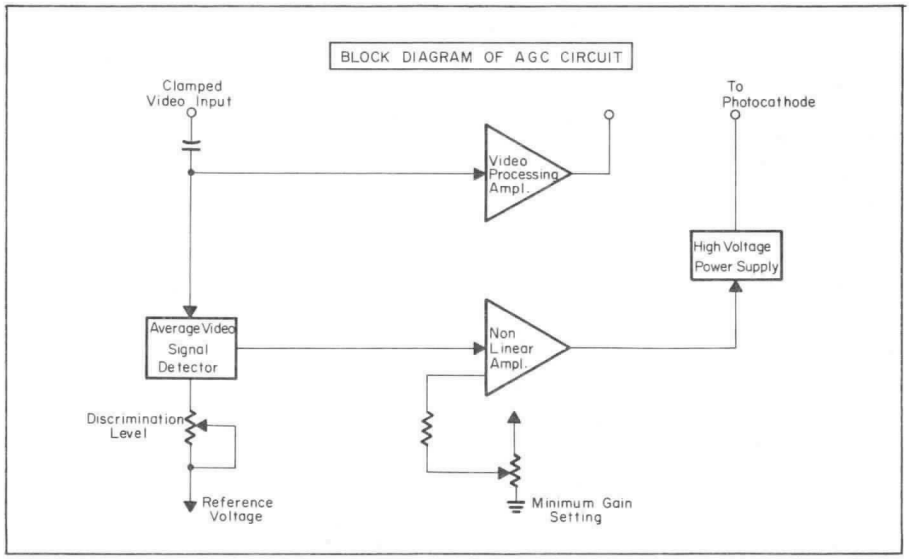

FIGURE 13

Note:
If the target "crosses over" during the operation, manifested by the appearance of a black area on the television monitor, the recommended procedure for returning to normal operation is to reduce the G5 voltage temporarily to about 10 volts and either reduce the faceplate illumination or increase the beam current.

Shutdown Procedure

The only important feature of the shutdown procedure is that the deflection power should be switched off only after the reading beam has been switched off. The recommended sequence is:

1. Turn off all voltages except the deflection supplies.
2. Turn off deflection power.

Systems Considerations

System requirements for the WL-30654 are similar to those for a standard 1½" magnetically deflected and focused vidicon. Only two additional voltages are required; one for the operation of the electrostatic image section and one for the suppressor mesh electrode (G5). The mesh, operated at about 15 volts, may be supplied by a voltage divider across the conventional gun supply.

Both this supply and the power supply used for the focus coil should be regulated to a level of 0.1% or less. Similarily, ripple should not exceed 0.1%.

The suppressor mesh should be maintained at AC ground to prevent pickup of spurious signals. It is recommended that a by-pass network be located as closely as possible to the suppressor mesh electrode.

Because the focus of the image section is independent of photocathode voltage, regulation for this supply is not critical. However, ripple is objectionable because it can be coupled into the video signal. It is recommended that the ripple should not exceed 0.1%. Automatic gain control can be accomplished by sampling the video signal and using a feedback network to regulate the photocathode voltage. A block diagram of such a network is shown in Figure 13.

Dynamic focusing and the reduction of shading can be accomplished using techniques similar to those used with standard 1½" all-magnetic vidicons. Dynamic focusing requires a 10 volt wave form applied to G3. Shading can be essentially eliminated by applying a parabolic

WL-30654
SEC Camera Tube

All Magnetic Gun
Electrostatic Image Section
1.6" Image Diagonal

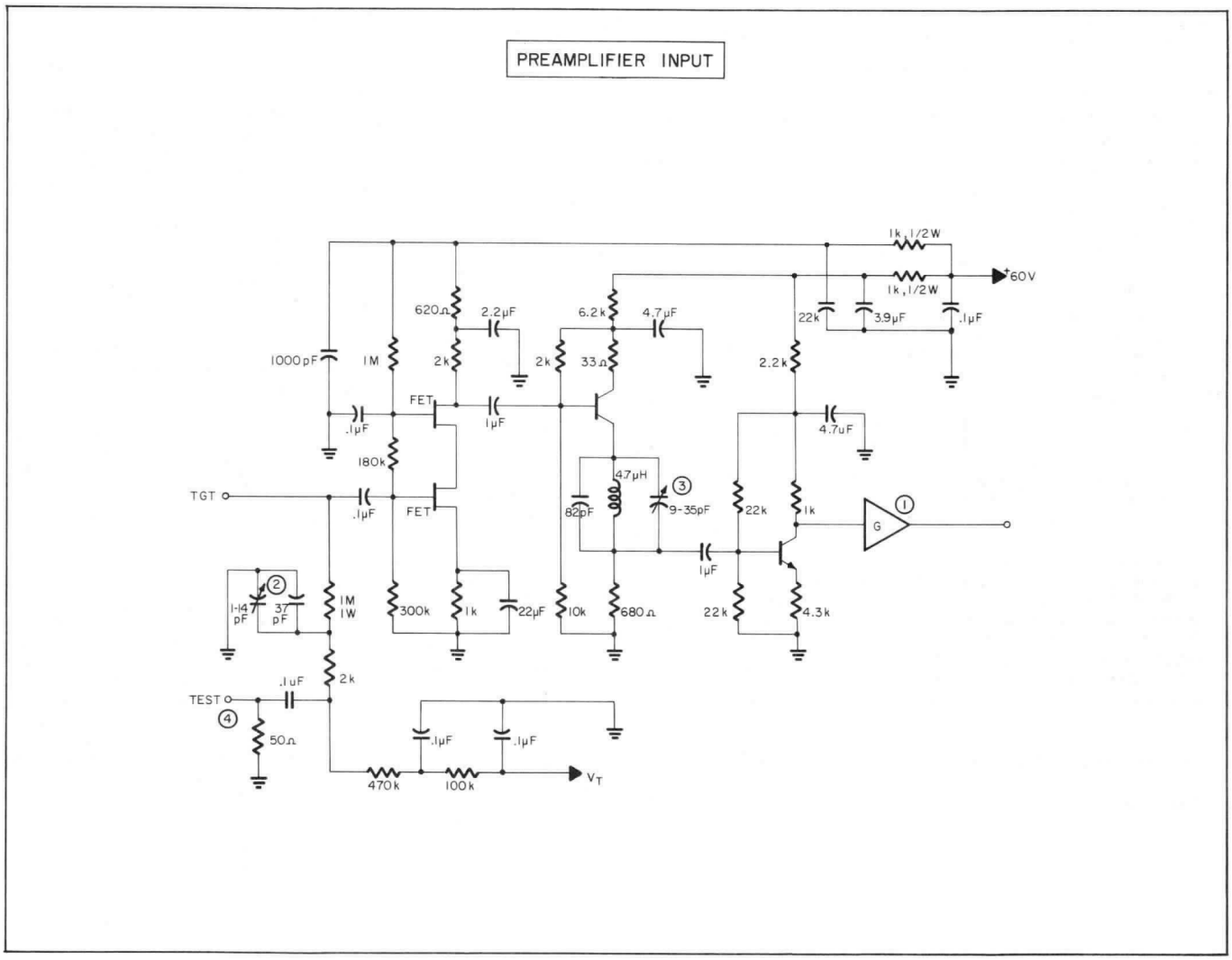

FIGURE 14

negative going voltage pulse to the thermionic cathode gun triode.

Provision should be made in the design of the camera head to shield the target from external magnetic and electrostatic fields which could introduce perturbations into the signal current. The magnetic fields produced by the focus and deflection coils may be shielded by thin mu-metal discs positioned at the target ends of both coils.

Provision should be made during the design of the camera head for secure mounting of the tube to eliminate possible resonances which could introduce microphonics. (Attention is drawn to the option of encapsulating the WL-30654 in a silicon rubber compound to facilitate mounting). The camera head should also be designed so that during operation the temperature of the tube does not exceed 55°C in the target and the photocathode regions.

In order to maximize the signal-to-noise ratio, it is important to keep the equivalent input noise current of the preamplifier as low as possible. For the shunt capacity of 35 pF and a bandwidth of 8 MHz equivalent noise currents of 4 - 5 nA RMS have been obtained using standard low noise cascode input circuits. For references on the design of low noise preamplifiers, see Note 12. Figure 14 shows a suggested design for a cascode type input to a preamplifier, using field effect transistors. The 9-35 pF variable capacitor may be used to adjust for variation in the camera tube and preamplifier input capacities. The test terminal may be used to inject a test or compensating signal. The input test signal is compensated by adjusting the 1-14 pF variable capacitor.

Westinghouse

Notes & References

An annotated bibliography of published work relating to the SEC target and to SEC camera tubes has been prepared by Westinghouse. Copies may be obtained by writing to Westinghouse Electronic Tube Division, Box 284 Elmira, N.Y. 14902.

1. (a) Boerio, A.H., Beyer, R.R., and Goetze, G.W. - "The SEC Target", Advances in Electronics and Electron Physics, Academic Press, Vol. 22A, pg. 229 (1966).
   (b) Goetze, G.W. and Boerio, A.H. - "Secondary Electron Conduction (SEC) For Signal Amplification and Storage in Camera Tubes", Proc. IEEE, Vol. 52, pg. 1007 (1964).
   (c) Goetze, G.W. - "Secondary Electron Conduction (SEC) and its Application to Photoelectronic Image Devices" - Advances in Electronics and Electron Physics, Academic Press, Vol. 22A, pg. 219 (1966).

2. The equivalent visual signal-to-noise ratio is the ratio of highlight video signal current to RMS noise current, multiplied by a factor of 3. [CCIR, International Radio Consultative Committee, Television Standards; Vol. 5 (1966).] An RMS noise current of 5 nanoamperes is assumed for the video preamplifier operating at a bandwidth of 8 MHz.

3. See Reference (a) of Note 1.

4. The corner resolution is measured at any point on the circumference of a circle whose diameter is 70% of the raster diagonal and concentric with the tube axis.

5. Parton, J.S. and Moody, J.C. - "Performance of Image Orthicon Type Intensifier Tubes", Image Intensifier Symposium, Fort Belvoir, Virginia, NASA SP (1961).

6. (a) Beyer, R.R., Green, M. and Goetze, G.W. - "Point-Source Imaging with the SEC Target", Advances in Electronics and Electron Physics, Academic Press, Vol. 22A, pg. 251 (1966).
   (b) Marshall, F.B. and Roane, G.D. - "Performance Comparison of the SEC Camera Tube and the Image Orthicon" - Advances in Electronics and Electron Physics, Academic Press, Vol. 22A, pg. 291 (1966).
   (c) Neal, B - SEC Vidicons - Sole Site Results. - Unpublished Report.

7. Livingston, W.C. - Journal of the Society of Motion Picture Television Engineers, Vol 72, pg. 771 (1963).

8. IEEE Standards on Television: Methods of Measurement of Aspect Ratio and Geometric Distortion", 202 (54-IRE2351).

9. The recommended target voltage is printed on a data sheet which accompanies each tube.

10. The function of the G5 electrode is to control the potential to which the target surface can rise. If the potential of the G5 electrode is set at a value higher than that of the crossover potential for KCl (approximately 15 volts) and if, because of a very bright exposure the target surface potential does rise above the crossover, then reading beam electrons will land on the target with sufficient energy to cause a net flow of electrons away from the target until the potential stabilizes at that of G5. The target will then fail to discharge and will produce a black area on the monitor. Operating the target in the "crossed over" mode is not recommended since it can lead to an increase in target grain. In order to discharge the target and resume normal operation, the G5 potential should be temporarily reduced to about 10 V.

11. It is recommended that the potential of the G4 electrode be maintained above the potential of G3.

12. (a) James, I.J.P. - "Fluctuation Noise in Television Camera Head Amplifier", Proceedings of IEE, Vol. 99, No. 20 p. 796 (1957).
   (b) "Fundamentals of Television Engineering" - G. M. Glasford McGraw Hill, pp. 111 - 124 (1955).

13. The maximum rating of 1 μA for the peak signal current should not be confused with the value quoted for the maximum high light signal current (see paragraph entitled Light Transfer Characteristic). The maximum rating quoted here is a figure suggested for the system designers use and is an estimate of the maximum possible signal current that the tube is capable of providing for a short period of time.

WL-30654
SEC Camera Tube

All Magnetic Gun
Electrostatic Image Section
1.6" Image Diagonal

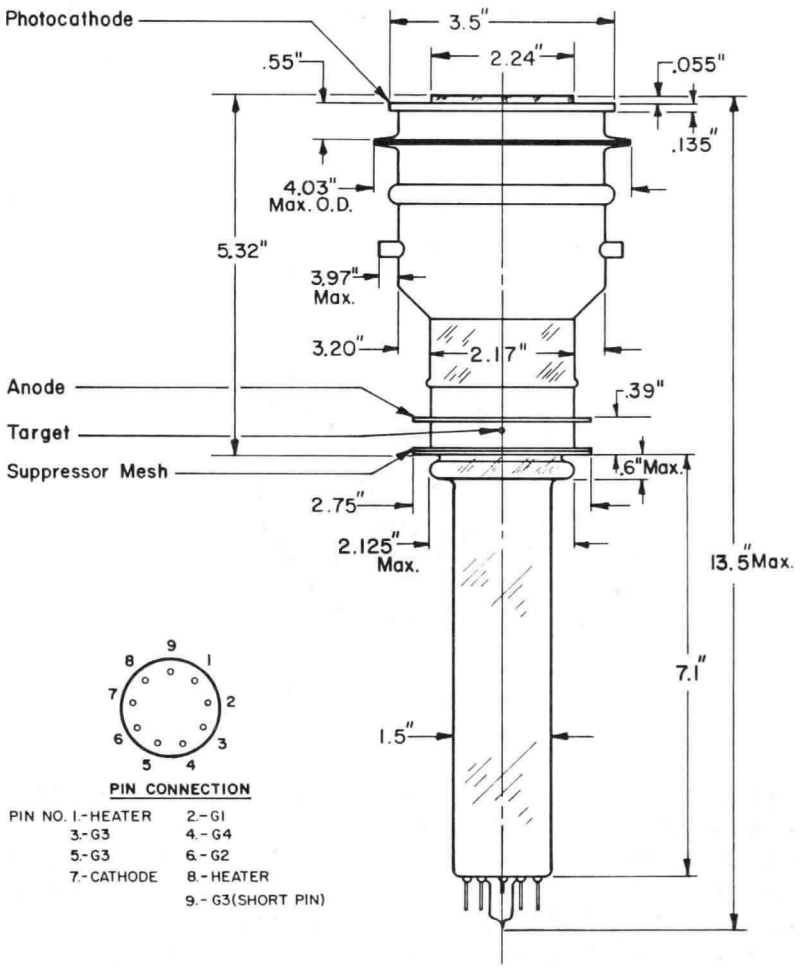

Option

If desired, in order to facilitate mounting, to provide environmental protection against humidity and to reduce the possibility of external voltage breakdown, the WL-30654 can be supplied with the image section encapsulated in a silicon rubber compound. The material used is GE RTV 511.

WL-30654
SEC Camera Tube

All Magnetic Gun
Electrostatic Image Section
1.6" Image Diagonal

Increased Sensitivity can be obtained by fiber optically coupling the WL-30654 to a Westinghouse WX-30957 or WX-30958 image intensifier. This combination provides about 100 times more sensitivity than that of the WL-30654 alone without compromising other important performance characteristics. For more information write or telephone the Image Tube Product Sales Manager, Westinghouse Electronic Tube Division, Post Office Box 284, Elmira, New York 14902. Telephone Area Code 607-739-7951.

Westinghouse Electric Corporation
Electronic Tube Division, Elmira, N.Y. 14902
Printed in U.S.A.

Westinghouse

WL-30677
Image Intensifier

40 mm Fiber Optic Input
25 mm Fiber Optic Output
Electrostatic Focus

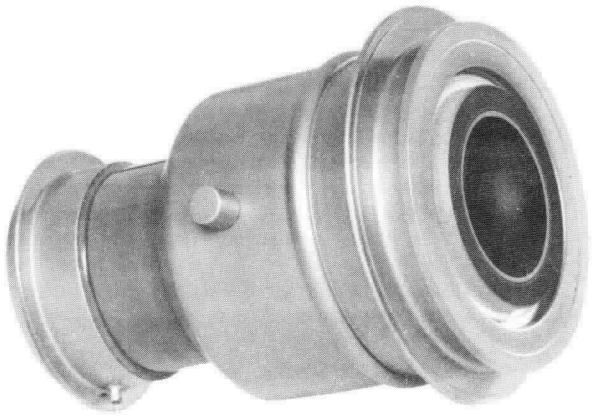

- Fiber Optic Input and Output
- Distortion-free
- S-25 Spectral Response
- High Brightness Gain
- P-20 Phosphor
- Variable Gain
- Electrostatic Focus
- Rugged, Compact Design

General Description

The WL-30677 is a distortion-free electrostatically focused image intensifier. Both the input and output windows are fiber optics with usable image diameters of 40 and 25 mm respectively. The fiber optics provide for efficient coupling to other fiber optic image tubes.

The WL-30677 features an S-25 photocathode which has enhanced sensitivity in the near infrared. This new photocathode type provides a spectral response which is broader than that of the S-20 without any significant increase in dark current.

The output screen is a modified P-20 phosphor. While maintaining the general spectral characteristics and high efficiency of the regular P-20 phosphor, the modified P-20 has a smaller phosphor particle size which provides greater resolution. The peak of the spectral emission characteristic provides a good match with the spectral response of the eye as well as an S-20 photocathode.

The uncomplicated diode-type design of the WL-30677 provides a rugged tube which, when properly encapsulated, is capable of withstanding severe environmental conditions. In addition, the tube is very easy to operate; other than making provisions for the input and output optical images it requires only a high voltage power supply (15 kV). Its focus is independent of operating voltage. This permits a convenient means of gain control without compromising other performance parameters. Another advantage is that the tube does not require an expensive stabilized power supply.

Applications

Because of its high brightness gain, the WL-30677 can be used alone in many applications. When greater light amplification is required it can be used as the first or later stage of a multistage fiber-optically coupled sensor. Such sensors include both direct-view devices and television camera tubes.

Two examples of combinations now available include the WL-32000 which consists of the WL-30677 coupled to the WL-30691 SEC camera tube and the WX-32002 consisting of the WL-30677 coupled to the WX-30920 (25 mm input, 16 mm output) image intensifier. The WX-32002 is also available complete with power supply, housing and lenses. When the WL-30677 is used in such combinations, the sensitivity for most practical scenes is limited only by photon-shot noise. Such systems are effective in many low-light-level applications such as passive night surveillance.

Scientific applications for these devices include image intensification in electron microscopy, astronomy, and nuclear physics. Also, with a suitable conversion layer on the input fiber optic the WL-30677 can be used to detect X-ray, gamma or slow neutron images.

September 1968
Supersedes TD 86-842 & TD 86-843
dated April 1, 1968
S6–3A–11C, S5–10C, WI–1300

Westinghouse

Principles of Operation

The WL-30677 is shown schematically in Figure 1. Light collected from the scene is formed into an optical image on the flat surface of the input fiber optic. This optical image is then transferred by the fibers of the fiber optic to the interior concave surface where a high sensitivity photocathode transforms the photon image into an electron image; i.e., photoelectrons are released in direct proportion to the light intensity at each spatial point of the image.

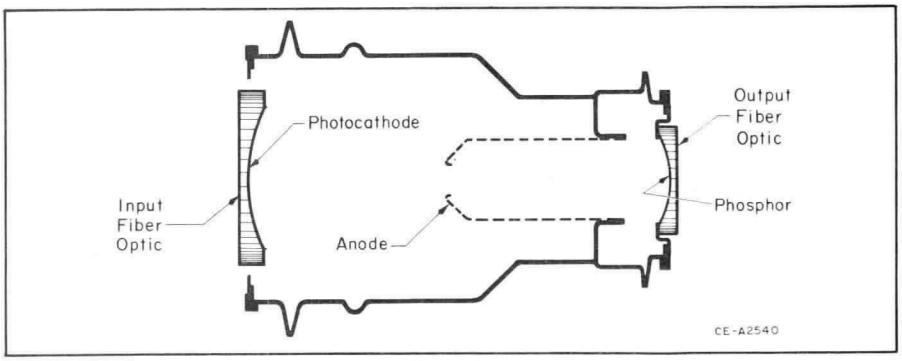

Figure 1

The photoelectrons are then accelerated and focused onto the output phosphor by an electrostatic lens formed by the potential applied between the anode cone and the photocathode. As the electrons strike the phosphor, kinetic energy acquired from the accelerating voltage is transformed into radiant energy. An aluminum film evaporated onto the phosphor serves as a reflector causing all the light emitted from the phosphor to leave through the output optic. The output fiber optic transmits this amplified image from the curved phosphor to the flat output surface, ready for direct viewing or for coupling into another device. The electron image at the phosphor, and thus the optical image, is reduced to approximately 0.64 its size at the photocathode. The image is also inverted.

Performance Data

Spectral Response and Sensitivity

The WL-30677 employs an S-25 photosurface deposited on a dark clad fiber optic faceplate. A typical absolute spectral response for this faceplate-photocathode combination is shown in Figure 2. The peak sensitivity occurs near 460 nm with high sensitivity in the near infrared. The typical sensitivity at 800 nm is 12 mA/W and at 850 nm is 7 mA/W. The typical sensitivity to white light is 225 μA/lm.

All illumination information using the units of lumens or footcandles is referred to the standard 2870°K color temperature tungsten filament bulb. For applications where the input scene spectral content differs from this standard color temperature (such as in night viewing applications), the expected tube performance can be calculated by using the photocathode current density computed for such a scene from the spectral response curve. To facilitate this type of calculation the gain is given both in the traditional unit (based on the standard 2870°K color temperature) and in an alternate unit based on the photocathode current density.

Gain Characteristics

Figure 2 shows the spectral energy emission characteristics of the output phosphor. The output brightness of the WL-30677 can be controlled by the applied voltage as shown in Figure 3. The typical brightness gain at 15 kV is 300 footlamberts output per footcandle input. For an output brightness of up to 10 footlamberts, the gain is independent of input illumination. An alternate parameter to brightness gain is Electron Light (EL) gain. EL gain relates the tube's output brightness to the photocathode current density. For the WL-30677, a brightness gain of 300 typically corresponds to an EL gain of 1.0 footlambert per nA/cm^2.

When another imaging device is coupled to the output of the WL-30677, the increased system sensitivity is given by the Coupled Electron (CE) gain. CE gain is the ratio of the photocurrent from the coupled device relative to its value when exposed uncoupled to the same illumination. With an S-20 photocathode having a response of 50 mA/W at 500 nm as the detector on the coupled device, the CE gain is typically 100 for the standard color temperature illumination. For scenes whose spectral content is primarily in the longer wavelength region, the CE gain is often much higher. This occurs because the WL-30677 shows greater sensitivity in the longer wavelength region than that of most second-stage devices.

Brightness Uniformity

The brightness uniformity of the output is expressed as a percentage deviation from the maximum brightness. It is measured with the faceplate uniformly illuminated and the output viewed through a 2.5 mm aperture. For the WL-30677 the brightness uniformity within zones 1 and 2 (as defined on page 3) is less than 30%.

Background

The inherent background of an image intensifier is normally specified as the input illumination required to produce an output equal to that observed when the photocathode is masked. This Equivalent Background Illumination, EBI, is measured at the normal operating potential of 15 kV. For the WL-30677 the EBI is typically 2 x 10^{-11} lm/cm^2 (about 2 x 10^{-8} fc) at room temperature.

Resolution

For a 100% contrast square wave pattern the typical limiting resolution of the WL-30677 is 25 lp/mm referred to the input (40 lp/mm at the output). This corresponds to 1200 TV lines per picture height for a normal 4 x 3 aspect ratio. The resolution changes only slightly over the image diameter as shown in the table on page 4. The Contrast Transfer Function (CTF) is shown in Figure 4. With the output brightness kept constant the CTF and resolution remain practically unchanged at voltages above 5 kV. Thus, the gain of the intensifier can be varied without degradation of the resolution simply by controlling the applied voltage.

Distortion

Differential distortion is a comparison of the magnifications of a small image element on and off axis of the tube. It is defined as the change of magnification divided by the axial magnification. Within the limit of measurement accuracy, about 2%, the WL-30677 shows no distortion over the entire image area. Hence, no pincushion or barrel distortion is visible.

WL-30677
Image Intensifier

40 mm Fiber Optic Input
25 mm Fiber Optic Output
Electrostatic Focus

Visual Quality

Image position is maintained for all light levels including the use of gain control. The WL-30677 shows no large scale fiber optic structure. Spots, when present, are primarily dark and are limited in number as shown below. Spot size and zones are referred to the output surface. There are no spots larger than 0.015".

Spot Diameter	Zone 1	Zone 2	Zone 3
0.007" to 0.015"	1	3	5
0.004" to 0.007"	1	10	10

The zones are defined as follows:

Zone 1 Central area 7.5 mm in diameter.
Zone 2 Area between concentric circles 7.5 and 20 mm in diameter.
Zone 3 Area between concentric circles 20 and 25 mm in diameter.

Environmental and Life

The WL-30677 will withstand shock and vibration levels in excess of the requirements of Military Specification MIL-E-5400J. The potted version will operate at its rated voltage in severe moisture conditions. With the possible exception of EBI, operational parameters are constant over the temperature range of −50°C to +55°C. Under normal operating conditions, the WL-30677 has a very long life with little or no loss of performance after 2000 hours of operation.

Performance Summary

The performance characteristics of the WL-30677 are tabulated on page 4 for a Class 1 tube. Class 2 tubes are also available. Class 2 tubes maintain all the performance characteristics listed in the table with the following exceptions:

- the minimum photoresponse is 125 μA/lm.
- there is no specification for the photoresponse at 800 and 850 nm.
- the minimum brightness gain is 150.

General

The output fiber optic is ground and polished flat to within 1 micron over the central 25 mm diameter, suitable for coupling to a similar surface. The input fiber optic is flat to within 10 microns, thus allowing very short depth of focus for the input optics. On special request the input optic can also be supplied to a 1 micron tolerance. The WL-30677 can be supplied potted or unpotted as shown in Figure 5. The encapsulating silicon rubber compound used is GE RTV-511.

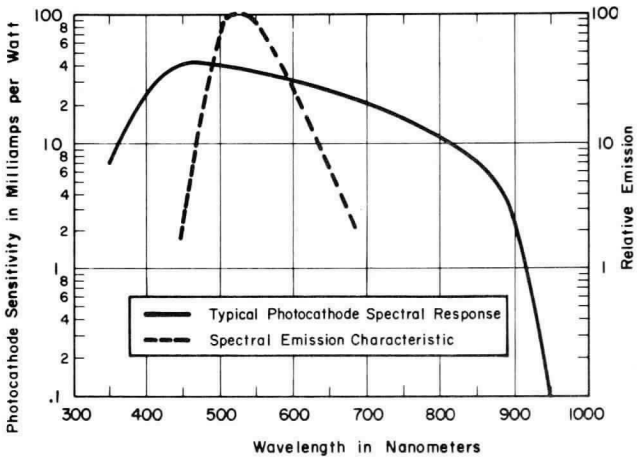

Figure 2

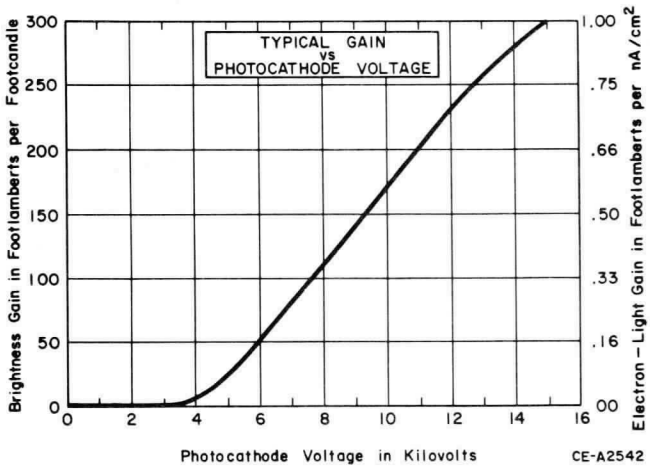

Figure 3

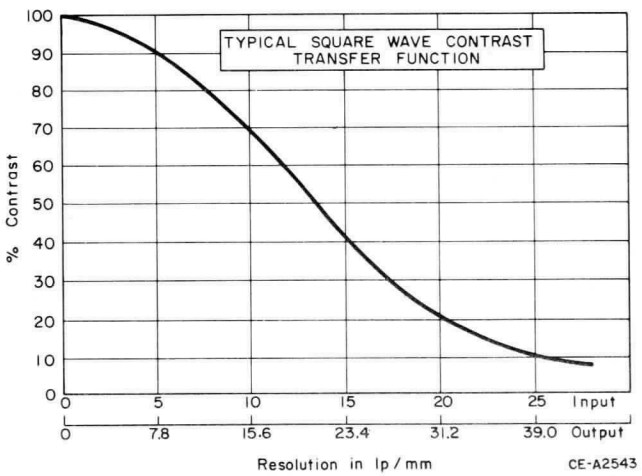

Figure 4

WL-30677
Image Intensifier

40 mm Fiber Optic Input
25 mm Fiber Optic Output
Electrostatic Focus

General Information

Fiber Optic Input Faceplate:
- Useful Diameter ..... 40 mm
- Flatness ..... Within 10 μm
- Numerical Aperture (nominal) .. 1.0

Fiber Optic Output Faceplate:
- Useful Diameter ..... 25 mm
- Flatness ..... Within 1 μm
- Numerical Aperture (nominal) .. 1.0

Photocathode ..... S-25 (Figure 2)
Image Section:
- Focusing Method .... Electrostatic
- Configuration ..... Diode
- Magnification 0.64

Phosphor ... Modified P-20 (Figure 2)
Weight:
- Unpotted ..... 500 Grams
- Potted ..... 1140 Grams

Operating Position ..... Any

Performance Parameters

	Typical	Minimum		Units
Photocathode Sensitivity:				
(a) To 2870°K color temperature	225	175★		μA/lm
(b) At 800 nm	12	6★		mA/W
(c) At 850 nm	7	1★		mA/W
Brightness Gain ‡	300	200★		fL/fc
Equivalent Background Illumination ‡	2×10^{-11}	5×10^{-11}	(max.)	lm/cm²
Contrast Transfer Function: ‡				
5 lp/mm	89	84		%
10 lp/mm	68	62		%
15 lp/mm	41	35		%
Limiting Resolution: ‡				
At center	25	23		lp/mm
At edge (80% dia)	20	18		lp/mm
Operating Voltage	15	20	(max.)	kV
Brightness Uniformity over central 80% diameter.	—	30	(max.)	%
Geometric Distortion	—	2	(max.)	%

★ Specification for a Class 1 tube. For Class 2, see text.
‡ At 15 kV Operating Voltage
‡ Referred to input faceplate.

OUTLINE DRAWINGS

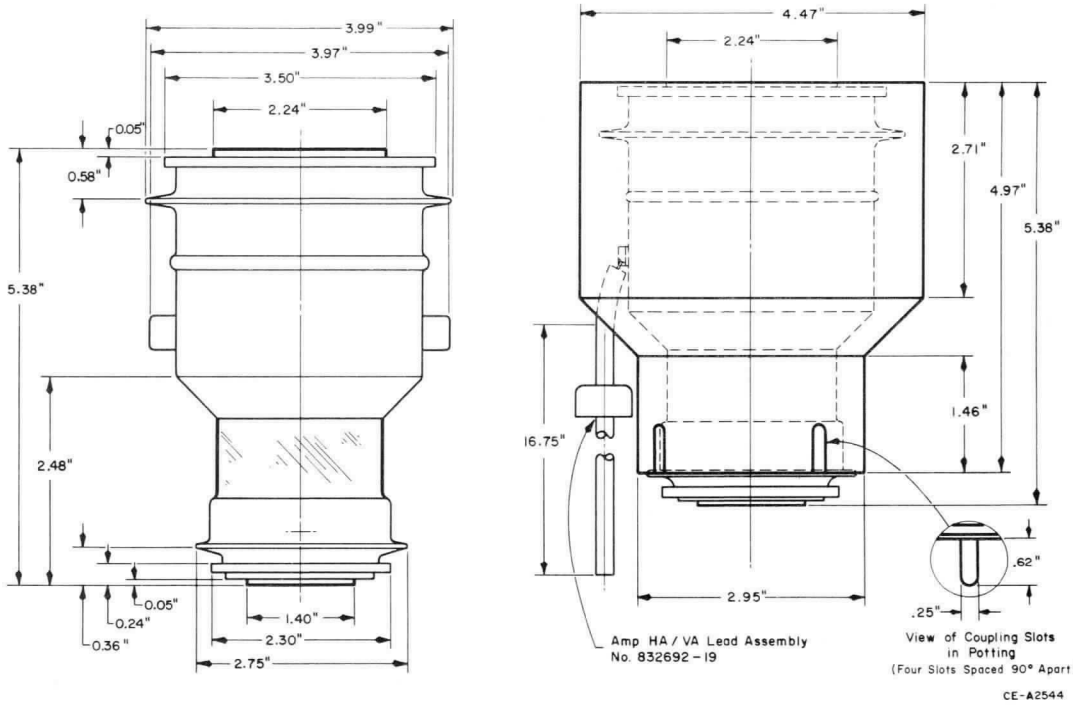

Figure 5

Westinghouse Electric Corporation
Electronic Tube Division, Elmira, N. Y. 14902
Printed in U.S.A.

Westinghouse

WL-30691
SEC Camera Tube

All Magnetic Gun
Electrostatic Image Section
1″ Image Diagonal

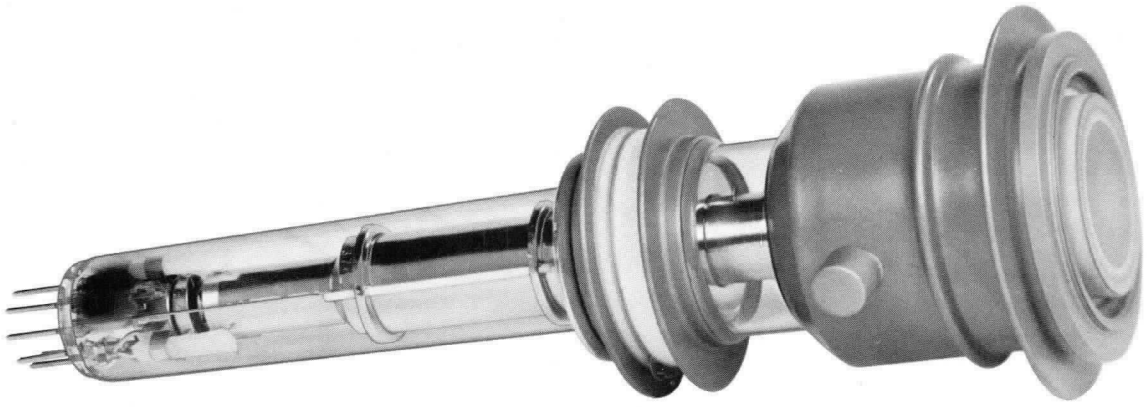

- **High Static & Dynamic Sensitivity**
- **Broad S-20 Spectral Response**
- **Low Lag**
- **Fiber Optic Faceplate**
- **Excellent Integration & Storage**
- **Rugged, Compact Design**
- **No Halation or Blooming**
- **Low Power Consumption**
- **Wide Dynamic Range**
- **Simple Operation**

General Description

The WL-30691 is a compact SEC camera tube characterized by high sensitivity, good resolution, low lag or persistence and simplicity of operation. The novel feature of the WL-30691 which distinguishes it and other SEC camera tubes from conventional camera tubes is the Secondary Electron Conduction (SEC) target.[1] This target has high gain, excellent storage properties and retains only a very small percentage of its stored signal after a single scan of the reading beam.

Because of the unique properties of the SEC target, the WL-30691 is able to operate over a very wide range of scene illuminations and exhibits excellent sensitivity with moving as well as with stationary scenes. Localized regions of a scene which are sufficiently bright to cause saturation do not produce halation or blooming so that information from surrounding regions is not obscured. The excellent storage characteristics of the SEC target enable the integration of low light level images for extended periods of time. The WL-30691 also performs well at slow scanning rates as well as at the normal scanning rate of 30 frames per second.

The electrostatic image section remains in focus for all photocathode voltages and since the sensitivity of the tube varies with photocathode voltage, this feature provides a convenient means for gain control. Scan power and voltage considerations for the reading gun are similar to those for a standard 1″ all-magnetic vidicon. Suitable deflection yokes and focus coils are commercially available.

The WL-30691 was designed for applications where the limitations of conventional camera tubes (for example, the persistence and lower sensitivity of the vidicon or the operational complexity and lower dynamic range of the image orthicon) either compromise performance or impose unacceptable systems requirements. It may be used, for example, in a compact color television camera where its high sensitivity permits reduced studio lighting and allows night-time outdoor broadcasting at normal stadium levels of illumination. The low lag characteristic of the WL-30691 makes possible a field sequential color camera using a single tube, thus eliminating the present necessity of matching three or four conventional camera tubes. The WL-30691 may also be used in closed circuit television systems for the remote viewing of dimly illuminated scenes. The storage and integration characteristics permits its use, for example, in narrow bandwidth, slow-scan systems and are representative of the versatility which makes the WL-30691 suitable for a wide range of scientific and industrial applications.

The WL-30691 may be used directly with an optical lens system, or may be fiber-optically coupled to a suitable image intensifier, such as the Westinghouse WX-30677, in order to achieve remote viewing at extremely low light levels. Alternatively the WL-30691 may be fiber-optically coupled to a suitable image converter to permit detection of X or UV radiation as well as near infrared radiation.

March 1968
Supersedes TD 86-817 dated January 1968
S6–3A–11C, S5–10C, WI–1300

Westinghouse

Principles of Operation

The WL-30691 SEC camera tube is schematically illustrated in Figure 1. It consists of an electrostatically focused diode image section, a Secondary Electron Conduction (SEC) target and a magnetically focused and deflected reading section. The semi-transparent S-20 photocathode is deposited on the inner surface of the plano-concave fiber optic faceplate. An optical image. focused onto the plane surface of the fiber optic faceplate, is conveyed to the photocathode where photoelectrons are emitted from the illuminated areas of the image in direct proportion to the amount of incident radiation.

The photoelectrons are accelerated towards the SEC target where they are brought to focus by the electrostatic lens formed between the photocathode surface and the anode cone. As the electron image is transferred from the photocathode surface to the target, it is reduced in size; the magnification is approximately 0.64.

The SEC target consists of a supporting membrane of Al_2O_3 approximately 500 Å thick followed by a 500 Å layer of aluminum, which forms the signal electrode. Deposited on this, and facing the reading gun, is a highly porous layer of KCl. By applying a positive potential to the aluminum signal plate and stabilizing the potential of the KCl surface at approximately gun cathode potential, (by scanning the KCl surface with the low velocity electron beam), an electric field can be established across the KCl layer.

Photoelectrons arriving at the target with energies of approximately 8 keV penetrate the Al_2O_3 and Al layers and dissipate most of their energy within the KCl layer by generating secondary electrons. An important feature of the SEC target is the release of secondary electrons into the vacuum interstices between the particles of KCl. Under the influence of the internal electric field the secondary electrons migrate in vacuum towards the signal plate. Conduction of the secondary electrons, therefore, takes place in *vacuum* and not in the *conduction band* of the KCl, thus avoiding the persistence effects caused by the trapping and subsequent release of charge carriers by shallow trapping centers. The movement of electrons within the KCl layer towards the signal plate creates a positive charge pattern which, in spacial distribution and intensity, corresponds to the optical image focused onto the tube faceplate. Because of the high resistivity of the low density target, the charge pattern can be stored for long periods of time.

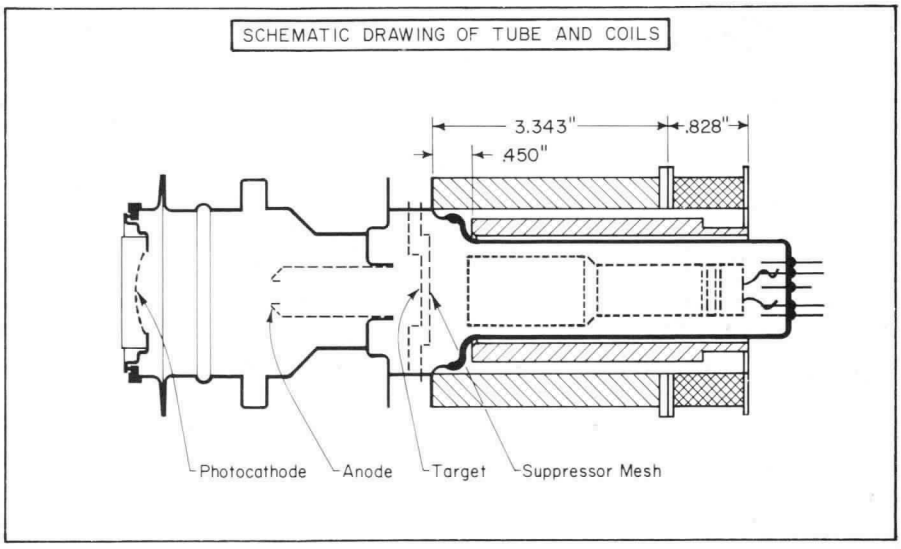

FIGURE 1

The charging of the KCl layer is periodically interrupted by the scanning beam, which returns the KCl to gun cathode potential by depositing electrons on the positively charged areas. This current pulse, constituting the video signal, is capacitively coupled to the signal plate. The current flowing in the signal plate is used to develop a voltage across a load resistor which, after amplification, can be used to produce a video picture on a television monitor in the usual manner.

The low velocity electron beam which scans the target is produced by an electron gun consisting of an indirectly heated thermionic cathode, a control grid (G1), and an accelerating grid (G2). The beam is focused at the surface of the target by the combined action of the uniform magnetic field of an external coil and the electrostatic field of G3. A field mesh (G4) serves to provide a uniform decelerating electrostatic field to the target.

A second mesh electrode, G5, (suppressor mesh) is positioned close to the target surface. The maximum potential to which the target surface can rise is limited to the potential of the suppressor mesh and this is normally operated at a potential just below the crossover potential for KCl (approximately 15 volts). Alignment and deflection of the beam is accomplished by transverse magnetic fields produced by external coils. (See Figure 1.)

Performance Data

Spectral Response and Sensitivity

The WL-30691 employs an S-20 photosurface deposited on a dark clad, 16μm fiber diameter, fiber optic faceplate. A typical spectral response for this faceplate-photosurface combination is shown in Figure 2. The peak quantum efficiency ranges from 15 to 20% and falls within the wavelength interval of 4200 to 4600 Å.

The high quantum efficiency of the S-20 photocathode and the high gain of the SEC target provides a typical sensitivity of 50μA/fc, minimum 35μA/fc, at a faceplate illumination of 10^{-3} fc (See Figure 3). Since the image size is 0.6" x 0.8" this corresponds to a typical sensitivity of 15,000μA/lm.

Light Transfer Characteristic

The light transfer characteristics of the WL-30691 are shown in Figure 3. The gamma varies from nearly one at lower light levels to about 0.6 at light levels of from 10^{-3} to 10^{-2} fc. At higher light levels, the target saturates at a surface voltage essentially equal to that of the suppressor mesh (G5). Although this provides a "knee" in the transfer curve, the light levels associated with the "knee" may cause image "burn-in" after prolonged exposure (see paragraph titled "Maximum Exposure Lev-

WL-30691
SEC Camera Tube

All Magnetic Gun
Electrostatic Image Section
1" Image Diagonal

els"). However, the tube may be safely operated at this and higher light levels by reducing the photocathode voltage.

The transfer function of Figure 3 applies for the standard 1/30 second frame time with both the photocathode and target voltages adjusted for optimum performance. Under these conditions the tube will provide a typical highlight signal current of 150 nA (minimum 140) for extended periods. Using a suitable preamplifier (see section titled "System Considerations") the signal current provides a peak signal to rms noise ratio of about 50. The equivalent visual signal-to-noise ratio[2] is about 150 or 43 db. These signal-to-noise ratios correspond to a dynamic range extending over two orders of magnitude in light level.

The excellent storage characteristics of the target make the WL-30691 ideally suited to slow scan applications. It should be noted that, when continuous slow scanning is used, the highlight signal current is reduced in proportion to the increase in frame time. This reduction in highlight signal current can be avoided by using digital scanning techniques where the beam rapidly scans a single resolution element and is then brought to rest before being pulsed to scan the following resolution element.

The gain of the SEC target increases with target voltage. Dark current is non-existent over the entire range of useful target voltages. Practical limits to the maximum target voltage are imposed by the onset of lag and the appearance of target grain. The optimum target voltage is specified in the test data supplied with each tube. Although some degree of gain control can be achieved by operating the target at lower voltages, this approach is not recommended because the storage capacity and, therefore, the highlight signal current decreases with decreasing target voltage.[3]

Gain Control

Effective gain control can be accomplished by varying the photocathode voltage. The relative small signal target gain, as a function of photocathode voltage, is shown in Figure 4. Varying the photocathode voltage from 3.5 to 7.5 kV provides a gain control range of at least 15 to 1 with no perceptible loss in resolution and an image rotation of about 1°. A larger range can be obtained by further reducing the photocathode voltage; however, the picture quality is gradually degraded by the appearance of grain.

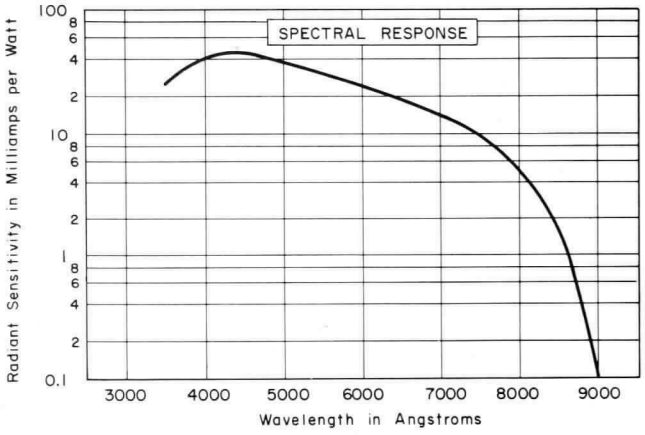

FIGURE 2

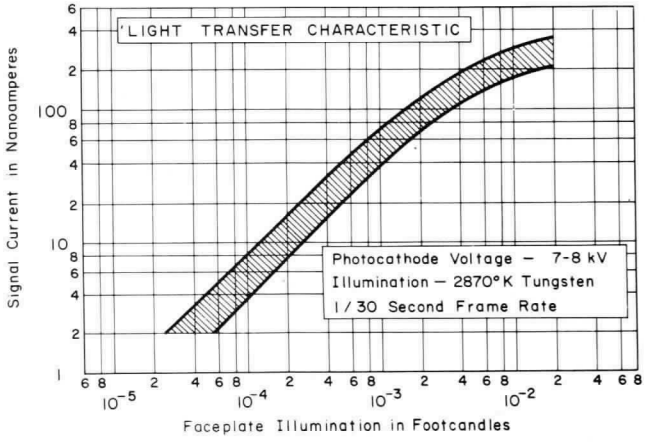

FIGURE 3

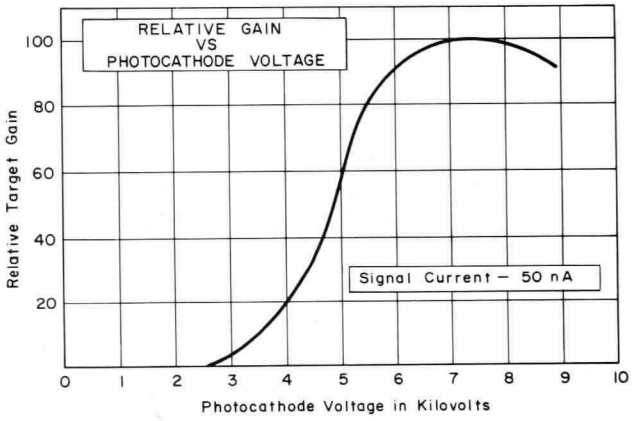

FIGURE 4

Westinghouse

Resolution

Figure 5 shows the uncompensated square wave response for the WL-30691. The curve given for the corner[4] is obtained when the tube is adjusted for best center resolution. The corner resolution can be improved to approximately match that of the center by dynamically focusing the G3 electrode with a suitable waveform of approximately 10 volts amplitude.

Values for the center square wave amplitude response at 200 and 400 TV lines per picture height are typically 60% and 20% with minimum values of 55% and 15% respectively. No significant variation in the modulation transfer function occurs for photocathode voltages ranging from approximately 3.5 to 8 kV. With a well-designed preamplifier, the typical limiting resolution is 600 TV lines per picture height at the center and 450 TV lines at the corner.

Lag Characteristics

The signal generating mechanism of the SEC target is essentially lagless because conduction of the secondary electrons across the storage layer takes place in vacuum rather than in the conduction band. The small amount of lag that is observed is believed to be because the stored charge resides within the KC l layer rather than on the surface. This limits the beam acceptance resulting in a discharge lag. At higher target voltages, the stored charge penetrates further into the layer resulting in increased lag. Figure 6 shows the lag characteristic for a typical tube operated at optimum target voltage and at a signal current of 100nA.

In the first frame, more than 90% of the signal is read out, leaving less than 10%, typically 5%, to be read out in the second frame. In the third and succeeding frames, the residual signal is unperceptible. This performance is significantly better than that of the vidicon where typically, the signal does not decay to 5% until approximately the sixth frame. The dependence of lag on signal current is shown in Figure 7. At lower light levels, the lag increases primarily because of the poorer beam acceptance associated with the lower voltage excursions on the target surface.

The relative freedom from lag provides the WL-30691 with a dynamic sensitivity which is

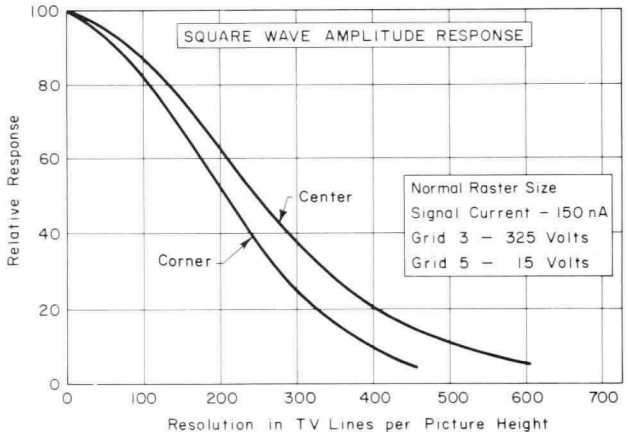

FIGURE 5

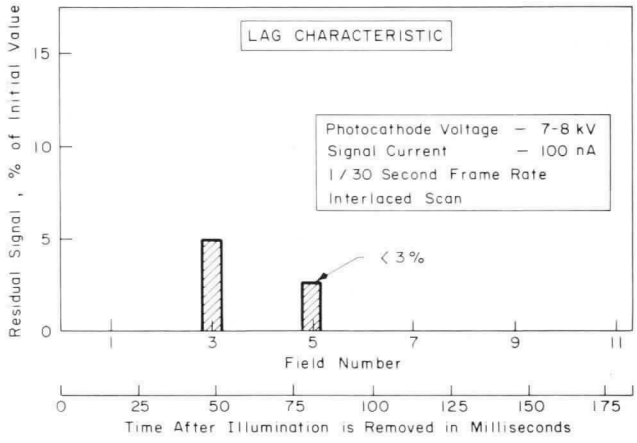

FIGURE 6

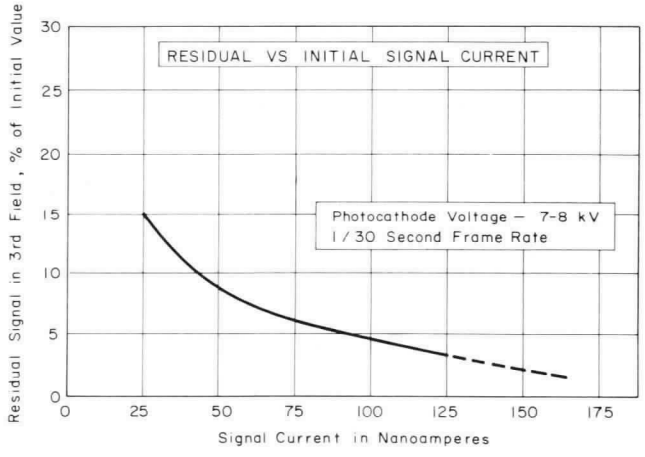

FIGURE 7

WL-30691
SEC Camera Tube

All Magnetic Gun
Electrostatic Image Section
1" Image Diagonal

only slightly less than its static sensitivity. This is illustrated in Figure 8 which shows the limiting resolution as a function of light level for both stationary and moving scenes. In one case, the image moved across the picture width in a 20-second period. In order to obtain the same resolution with the dynamic scene, it is necessary to increase the light level by about a factor of 2.5. Under similar circumstances, the image orthicon requires an increase in light level of about a factor of 100.[5]

Point Source Imaging

Point source imaging characteristics have been measured for a number of different SEC camera tube types, including the WL-30691, and have been found to be substantially independent of the tube type.[6] Both the sensitivity, that is the minimum number of radiation quanta sufficient to produce a signal detectable on a television monitor, and the dynamic range of point source detection are important parameters.

The WL-30691, operating in a system with a 2 nA noise current, can detect a signal of about 600 photoelectrons per integration period. For a photocathode with a 20% quantum efficiency, this would correspond to the arrival of 3000 photons at the faceplate of the tube. No significant deviations from perfect reciprocity occur for integration periods of at least several minutes. See Figure 9. Increased threshold sensitivity may be achieved by increasing the target voltage by approximately 2 volts between integration and readout of the stored signal. In this way the beam resistance is reduced and the co-planar biasing caused by the negatively charged unexposed areas of the target can be eliminated.

The dynamic range is limited by the point at which physical spreading or blooming of the point image becomes "objectionable". Figure 10 shows the dependence of the diameter of the image point on the intensity of the source. The curve compounds the results of a number of independent measurements and shows that the diameter of the point image varies approximately with the 0.2 power of the source intensity. For example, the diameter of the point image increases by a factor of approximately six when the source intensity increases from threshold by a factor of four orders of magnitude. This performance may be contrasted with that of the image orthicon where the same degree of point spreading occurs for only one order of magnitude in intensity above the threshold.[7]

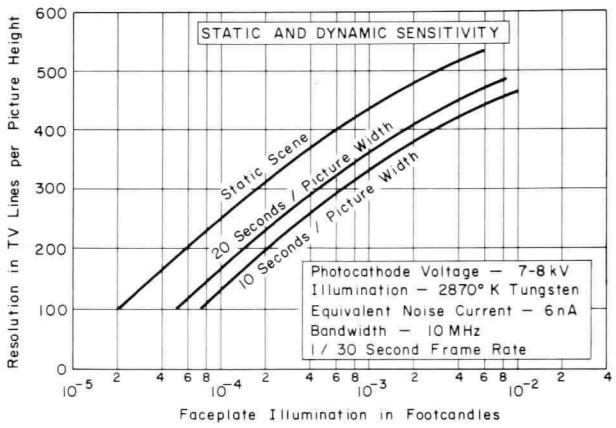

FIGURE 8

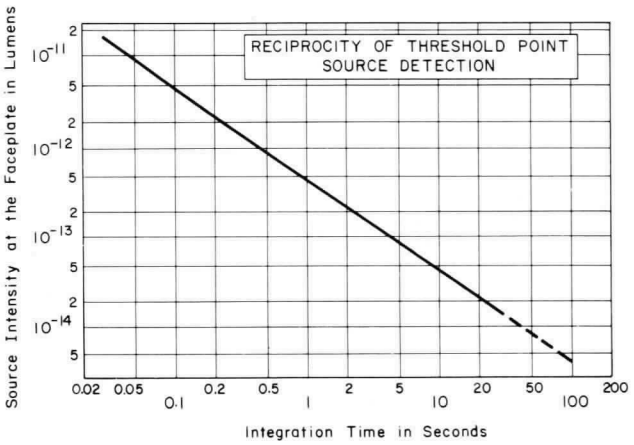

FIGURE 9

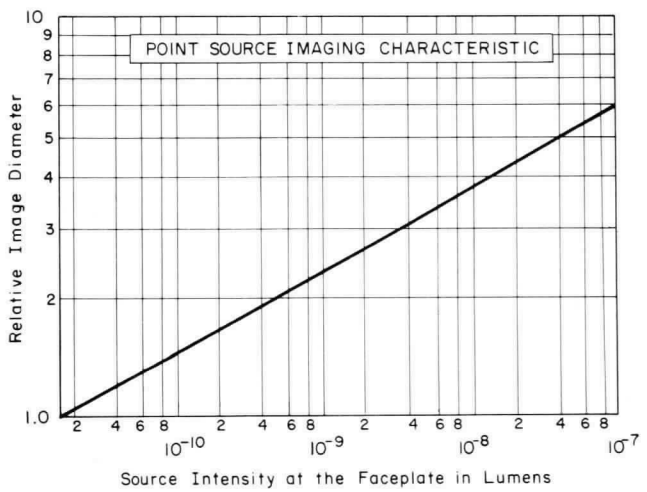

FIGURE 10

Westinghouse

Integration and Storage

The SEC target used in the WL-30691 has an extremely high resistivity. Thus a signal can be integrated over a period of several minutes without degradation due to target leakage. The maximum integration period is limited only by spurious emission in the image section of the tube which, after long periods, can saturate the target. With selected tubes, integration times of up to thirty minutes are possible. Throughout the entire exposure, the tube shows excellent reciprocity in light level and exposure time. The ability to integrate over such long periods effectively increases the sensitivity of the tube by a factor of several thousand without compromising other performance parameters.

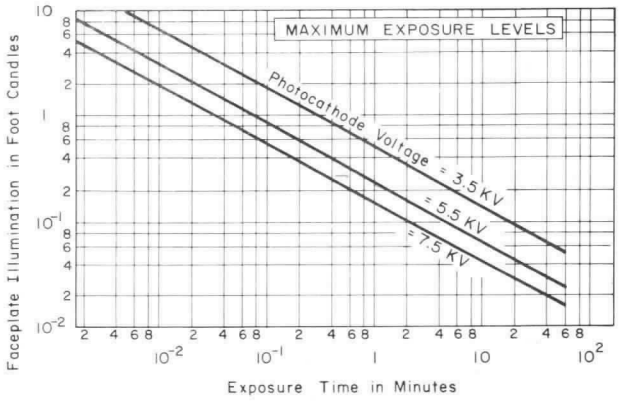

FIGURE 11

Once a signal has been integrated, it can be stored for many hours provided the photocathode voltage is turned off. The stored signal can then be read out in essentially one frame at any convenient scan rate.

Uniformity and Distortion

Shading in the WL-30691 is caused mainly by the slight radial change in magnification in the image section. The photocurrent density incident on the target varies with the square of the magnification. Since the magnification is slightly larger at the edges, the current density there is reduced, resulting in a lower signal current. The video signal uniformity, defined as the percentage deviation from the maximum signal level, is typically 25% and is always less than 40%. It is measured across a horizontal line at the center of the picture.

Geometric distortion is typically 2% with a maximum of 4%. It is measured with an EIA linearity chart in accordance with IEEE Standard Number 202[8].

Picture Quality

Over the recommended operating ranges of the WL-30691, there are no signal redistribution effects so that a signal in a given area is essentially independent of the signal in a neighboring area. Thus, the tube is free of halation. Slight blooming, or image growth, occurs at very high light levels due to the beam bending associated with excessive voltage excursions at the target surface.

All tubes are free of fixed pattern noise, such as smudges or demarcation lines. The maximum number and distribution of small area blemishes are defined in the table below:

	Zone 1	Zone 2	Zone 3
All Blemishes	1	3	15
Blemishes with a major dimension of 7 or 8 television lines ..	0	1	4

The zones are defined as follows:

Zone 1 ..... Central 10% of raster area.
Zone 2 ..... Central 20% of raster area.
Zone 3 ..... Entire raster area.

These blemishes are generally bright spots and are defined as any spurious signal whose major dimension covers three or more television lines. No blemish whose major dimension covers nine or more television lines is permitted anywhere in the raster.

Maximum Illumination Levels

If an excessive amount of energy is dissipated in the SEC target, the target suffers a loss of gain, resulting in a permanent negative image (burn-in). Damage can be caused by either an excessive target voltage or by unduly high light levels. In the first case, damage can be avoided by maintaining the target voltage at or below the value recommended in the data supplied with the tube. Damage associated with high light levels also depends on the photocathode voltage and the exposure time. These relationships are illustrated in Figure 11. The curves represent the maximum energy exposure that can be tolerated without danger of permanent target damage for various photocathode voltages. For example, at a photocathode voltage of 5.5 kV, a highlight photocathode illumination of 1/5 foot-candle can be tolerated for periods of up to 1 minute without "burn-in". (For a lens at f/11 this illumination corresponds to a scene brightness of about 120 fL. Longer exposure times may result in permanent damage. It should be noted that, in most cases, exposures at or near those described by the curves of Figure 11, may cause a temporary loss in gain. However, recovery is complete within a period of several minutes.

Life and Environmental Characteristics

The WL-30691 has been used extensively in various applications and has shown useful lifetimes of 500 hours or more, comparable to vidicons and image orthicons. It does not require an extended warm-up period and shows highly reproducible performance even at operating temperatures as low as −54°C or as high as +55°C. The only performance parameter which may change with extended operation is sensitivity which decreases at most by one f-stop. When stored under suitable conditions, e.g. a clean dry environment at room temperature, the tube remains stable and shows an extremely long shelf-life.

The WL-30691 has been designed for use in systems which must operate under the environmental conditions described in military specification Mil-E-5400J. The rugged design of the tube is compatible with even the most severe vibration levels, (curve IV, of the specification). However, care must be taken in the design of the camera head so that resonances which could produce microphonics are avoided.

WL-30691
SEC Camera Tube

All Magnetic Gun
Electrostatic Image Section
1" Image Diagonal

General Data

Faceplate	Fiber Optic
Fiber Diameter	16μm
Numerical Aperture	1.1
Useful Diameter	1.0"
Photocathode	S-20 (Figure 2)
Image Section:	
Focusing Method	Electrostatic
Configuration	Diode
Target Shunt Capacity	25 pF typ.
	30 pF max.
Reading Section:	
Focusing Method	Magnetic
Focusing Coil	VF-558-1 or Equivalent*
Deflection Method	Magnetic
Deflection Yoke	VYL-160 or Equivalent*
Alignment Coil	VA-132 or Equivalent*
Cathode	Indirectly Heated
Heater Power	1 Watt
Base	EIA E8-11
Socket #544 18088	(Cinch Mfg. Co.)
Overall Length	8.5 Inches
Maximum Diameter	2.85 Inches
Diameter of Reading Gun Bulb	1 Inch
Weight	0.6 Pounds
Operating Position	Any

*Cleveland Electronics Inc.

Operational Data	Maximum Rating	Typical Operation	Units
Image Size at the Faceplate: 0.6" x 0.8"			
Direction of Scan: Parallel to a Line Joining Axis of Tube to Target Lead.			
Photocathode Illumination	See Figures 3 and 11		
Photocathode Voltage	−9	−7.5	Kilovolts
Anode Cone Voltage	NA*	Ground	—
Target Voltage (Reference 9)	30	10 to 30	Volts
Grid 5, Suppressor Mesh, Voltage (Reference 10)	40	15	Volts
Grid 4, Field Mesh, Voltage (Reference 11)	400	360	Volts
Grid 3, Focus Electrode Voltage	400	340	Volts
Grid 2, Accelerator, Voltage	350	300	Volts
Grid 1, Voltage	−150 +0	−40	Volts
Heater Voltage	6.9	6.3	Volts
Peak Heater to Cathode Voltage:			
Heater Negative	125	NA*	Volts
Heater Positive	10	NA*	Volts
Minimum Peak-to-Peak Blanking Voltage Applied To:			
Cathode (Positive Pulse)	NA*	30	Volts
Grid 1 (Negative Pulse)	NA*	80	Volts
Cathode Voltage	NA*	Ground	—
Magnetic Focusing Field (Center of Coil)	NA*	40	Gausses
Magnetic Alignment Field	NA*	0 to 4	Gausses
Peak Deflection Current for Specified Yoke:			
Horizontal	NA*	170	mA
Vertical	NA*	35	mA
Peak Signal Current	400	NA*	nA

* Not Applicable

Operating and Handling Considerations

Important Precautions

1. *The tube is supplied with an external voltage limiting device connected between the SEC target and the suppressor mesh (G5). This should not be disconnected, as its purpose is to protect the target from permanent damage which could be caused by the accidental application of a high voltage (e.g. from an electrostatically charged human operator).*
2. *The target and suppressor voltages recommended with each tube should not be exceeded.*
3. *The tube should not be operated at exposure levels greater than those illustrated in Figure 11.*
4. *The horizontal and vertical deflection power should be adjusted to ensure that the target is either normally scanned or over scanned before the reading beam is turned on.*
5. *Avoid Underscanning.*

Set-up Procedure

As long as the above precautions are taken, the tubes can be set up and operated in a manner similar to that of a vidicon. The sequence given below is recommended as a convenient set-up procedure.

For day-to-day operation no special "warm up" time is required. However, if a camera tube has been stored on the shelf for a period of more than several days it is recommended as "good practice" to operate the tube for approximately 15 minutes with the lens capped.

1. Install the tube in the camera head using the focus, deflection and alingment coil positions shown in Figure 1. The polarity of the focusing coil should be such that an externally positioned north seeking pole is attracted to the target end of the focusing coil. It is also recommended that a 1" diagonal mask with a 4:3 aspect ratio be used to prevent light reaching unused parts of the photocathode.
2. Make connections to all electrodes.
3. Apply deflection voltages sufficient to overscan the target.
4. Apply voltages to the heater, focusing coil and alignment coils.
5. Apply maximum negative bias to G1, then apply the recommended voltages to G2, G3, G4, G5 and target.
6. Apply 10^{-4} fc uniform illumination to the faceplate of the tube.
7. Apply photocathode voltage and adjust the G1 voltage until the beam current is sufficient to discharge the target.
8. Center and focus a test pattern on the faceplate of the tube so that the image size is 0.6" x 0.8". The illumination level should be adjusted to about 10^{-3} fc.
9. Adjust the deflection amplitude and centering controls such that the target ring is just visible in the corners of the picture. Then further decrease the deflection power until the test chart completely fills the picture.
10. Adjust the G3 beam focus control and optical focus alternately until no further improvement in picture quality is obtained. The G4 voltage should always be maintained above that of G3 by about 20 volts.
11. Adjust alignment currents for best beam landing in the following manner. Reduce the G5 voltage to a value just above the threshold for beam landing. Adjust the alignment currents to center and maximize the area over which the beam can land. If a G5 voltage of more than 1 or 2 volts is needed for beam landing over the entire raster, check the positions of the focusing and deflection coils.
12. Return G5 voltage to recommended value, check G3 and optical focus.

Westinghouse

Shutdown Procedure

The only important feature of the shutdown procedure is that the deflection power should be switched off only after the reading beam has been switched off. The recommended sequence is:

1. Turn off all voltages except the deflection supplies.
2. Turn off deflection power.

Systems Considerations

System requirements for the WL-30691 are similar to those for a standard 1" magnetically deflected and focused vidicon (such as the Westinghouse WL-7290). Only two additional voltages are required; one for the operation of the electrostatic image section and one for the suppressor mesh electrode (G5). The mesh, operated at about 15 volts, may be supplied by a voltage divider across the conventional gun supply. Both this supply and the power supply used for the focus coil should be regulated to a level of 0.1% or less. Similarily, ripple should not exceed 0.1%.

The suppressor mesh should be maintained at AC ground to prevent pickup of spurrious signals. It is recommended that a by-pass network (e.g., a 100 K series resistor and a .01 μF capacitor connected directly to G5) be located as close as possible to the suppressor mesh electrode.

Because the focus of the image section is independent of photocathode voltage, regulation for this supply is not critical. However, ripple is objectionable because it can be coupled into the video signal. It is recommended that the ripple should not exceed 0.1%. Automatic gain control can be accomplished by sampling the video signal and using a feedback network to regulate the photocathode. A block diagram of such a network is shown in Figure 12.

Dynamic focusing and the reduction of shading can be accomplished using techniques similar to those used with standard 1" all-magnetic vidicons. Dynamic focusing requires a 10 volt wave form applied to G3. Shading can be essentially eliminated by applying a parabolic negative going voltage pulse to the gun triode.

Provision should be made in the design of the camera head to shield the target from external magnetic and electrostatic fields which could introduce perturbations into the signal current. The magnetic fields produced by the focus and deflection coils may be shielded by thin mu-metal discs positioned at the target ends of both coils. These are included as an integral part of the focus coil. Separate discs are required for the deflection yoke. Effective shielding from electrostatic fields is provided by the metal flanges positioned on either side of the target-suppressor mesh region. It is recommended that these flanges be connected directly to a common ground.

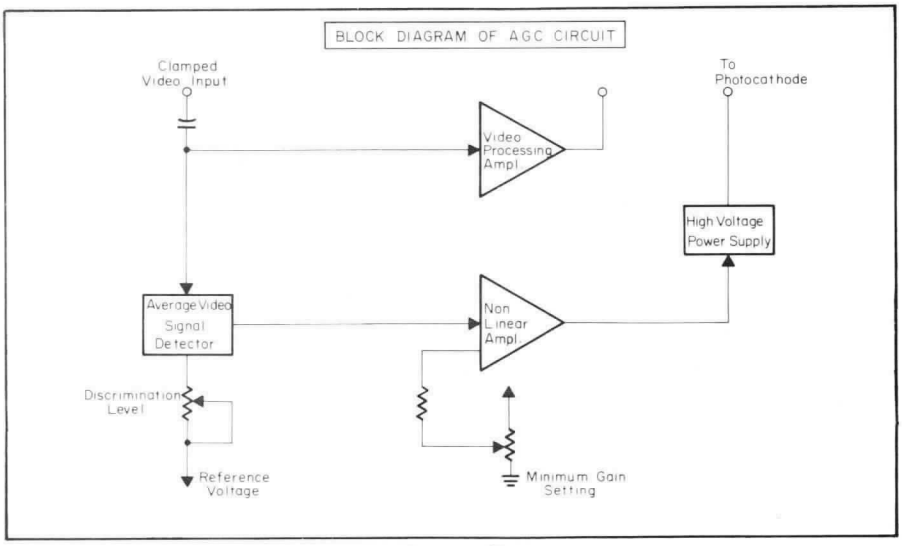

FIGURE 12

Provision should be made during the design of the camera head for secure mounting of the tube to eliminate possible resonances which could introduce microphonics. (Attention is drawn to the option of encapsulating the WL-30691 in a silicon rubber compound to facilitate mounting). The camera head should also be designed so that during operation the temperature of the tube does not exceed 55°C in the target and the photocathode regions.

In order to maximize the signal-to-noise ratio, it is important to keep the equivalent input noise current of the preamplifier as low as possible. For the shunt capacity of 25 pF and a bandwidth of 7 MHz, equivalent noise currents of 3 - 4 nA RMS have been obtained using standard low noise cascode input circuits. For references on the design of low noise preamplifiers, see Note 12.

Figure 13 shows a suggested design for a preamplifier using thermionic vacuum tubes. This design differs from conventional designs principally in the input and output circuits. In the usual preamplifier input circuit the reactance of the input capacitance (including the shunt capacity of the camera tube) limits the high frequency signal voltage developed across the load resistor. Since the noise current of the load resistor and input tube is independent of frequency, the resultant signal-to-noise ratio decreases with increasing frequency.

The design shown in Figure 13 includes an input inductance, which resonates with the target shunt capacity and the preamplifier input capacity near the high frequency end of the video band. This increases the reactance in parallel with the load resistance, thus increasing the signal voltage relative to the noise and thereby improving the signal-to-noise ratio.

The input circuit modifies the overall frequency response of the preamplifier which may then be corrected by a rejection circuit at the output, in addition to the usual equilization circuits. By suitably tuning the input and output inductances the frequency response may be made flat over the desired bandwidth.

The inductance of the input coil L_1 may be derived from the following relation:

$$f_1 = \frac{1}{2\pi\sqrt{L_1 C_T}}$$

WL-30691
SEC Camera Tube

All Magnetic Gun
Electrostatic Image Section
1" Image Diagonal

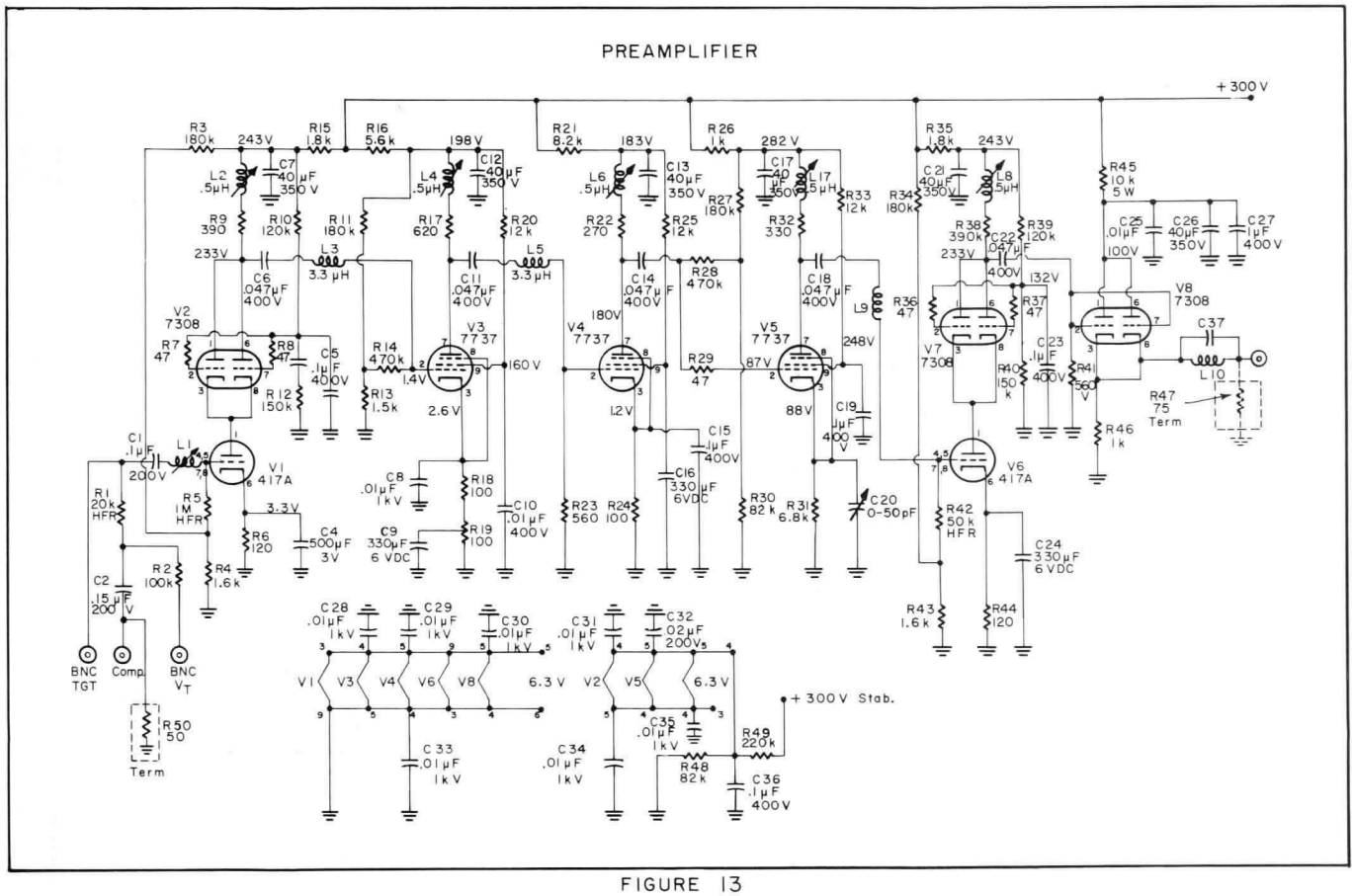

FIGURE 13

where f_1 = bandpass frequency required

$$C_T = \frac{C_A C_B}{C_A + C_B}$$

C_A = shunt capacity of tube

C_B = input capacity of preamplifier

Similarly, the inductance of the output coil L_{10} may be derived from the relation:

$$f_1 = \frac{1}{2\pi\sqrt{L_{10} C_{37}}}$$

C_{37} = 68 pF

Because the improvement in signal-to-noise ratio is obtained at the expense of the high frequency noise, the effective visual improvement in signal-to-noise is less than might be expected, however the design still represents a worthwhile improvement over conventional preamplifier designs. (This is particularly so where subsequent aperture correction is used). These points are discussed more fully in the references given in Note 12. Since the response of the amplifier begins to rise again at frequencies beyond the desired bandwidth, a suitable sharp cutoff filter is required. This may be of a conventional LC design and may be connected anywhere between the tunable output coil of the preamplifier and the display monitor.

Westinghouse

Notes & References

An annotated bibliography of published work relating to the SEC target and to SEC camera tubes has been prepared by Westinghouse. Copies may be obtained by writing to Westinghouse Electronic Tube Division, Box 284 Elmira, N. Y. 14902.

1. (a) Boerio, A.H., Beyer, R.R., and Goetze, G.W. - "The SEC Target", Advances in Electronics and Electron Physics, Academic Press, Vol. 22A, pg. 229 (1966).
   (b) Goetze, G.W. and Boerio, A.H. - "Secondary Electron Conduction (SEC) For Signal Amplification and Storage in Camera Tubes", Proc. IEEE, Vol. 52, pg. 1007 (1964).
   (c) Goetze, G.W. - "Secondary Electron Conduction (SEC) and its Application to Photoelectronic Image Devices" - Advances in Electronics and Electron Physics, Academic Press, Vol. 22A, pg. 219 (1966).
2. The equivalent visual signal-to-noise ratio is the ratio of highlight video signal current to RMS noise current, multiplied by a factor of 3. An RMS noise current of 3 nanoamperes is assumed for the video preamplifier operating at a bandwidth of 7 MHz.
3. See Reference (a) of Note 1.
4. The areas within which corner resolution is measured are defined by squares, whose sides are equal to 15% of the total picture width, situated at the corner of the scanned area.
5. Parton, J.S. and Moody, J.C. - "Performance of Image Orthicon Type Intensifier Tubes", Image Intensifier Symposium, Fort Belvoir, Virginia, NASA SP (1961).
6. (a) Beyer, R.R., Green, M, and Goetze, G.W. - "Point-Source Imaging with the SEC Target", Advances in Electronics and Electron Physics, Academic Press, Vol. 22A, pg. 251 (1966).
   (b) Marshall, F.B. and Roane, G.D. - "Performance Comparison of the SEC Camera Tube and the Image Orthicon" - Advances in Electronics and Electron Physics, Academic Press, Vol. 22A, pg. 291 (1966).
   (c) Neal, B. - SEC Vidicons - Sole Site Results. - Unpublished Report.
7. Livingston, W.C. -Journal of the Society of Motion Picture Television Engineers, Vol. 72, pg. 771 (1963).
8. "IEEE Standard #202 (54 IRE2351) Television: Methods of Measurement of Aspect Ratio and Geometric Distortion".
9. The recommended target voltage is printed on a data sheet which accompanies each tube.
10. The function of the G5 electrode is to limit the maximum potential to which the target can rise. If the potential of the G5 electrode is set at a value higher than that of the crossover potential for KCl (approximately 15 volts) and if, because of a very bright exposure the target surface potential does rise above the crossover, then reading beam electrons will land on the target with sufficient energy to cause a net flow of electrons away from the target until the potential stabilizes at that of G5. The target will then fail to discharge and will produce a black area on the monitor. Operating the target in the "crossed over" mode is not recommended since it can lead to an increase in target grain. In order to discharge the target and resume normal operation, the G5 potential should be temporarily reduced to about 10 V.
11. It is recommended that the potential of the G4 electrode be maintained at about 20 volts above the potential of G3.
12. (a) James, I.J.P. - "Fluctuation Noise in Television Camera Head Amplifier", Proceedings of IEE, Vol. 99, No. 20 (1957).
    (b) "Fundamentals of Television Engineering" - F.M. Glasford, McGraw Hill, pp. 111 - 124 (1955).

WL-30691
SEC Camera Tube

All Magnetic Gun
Electrostatic Image Section
1″ Image Diagonal

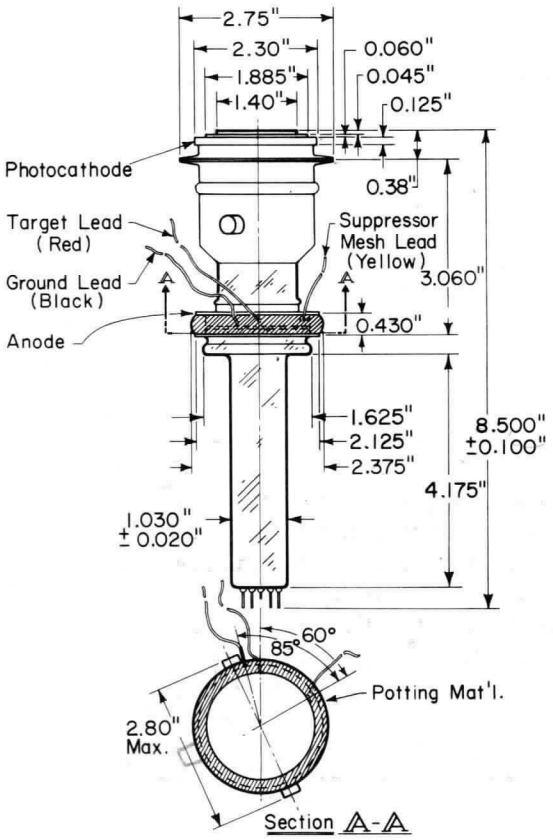

Option

If desired, in order to facilitate mounting, to provide environmental protection against humidity and and to reduce the possibility of external voltage breakdown, the WL-30691 can be supplied with the image section encapsulated in a silicon rubber compound. The material used is Dow Corning RTV 511. The dimensional outline of the encapsulated tube is shown below.

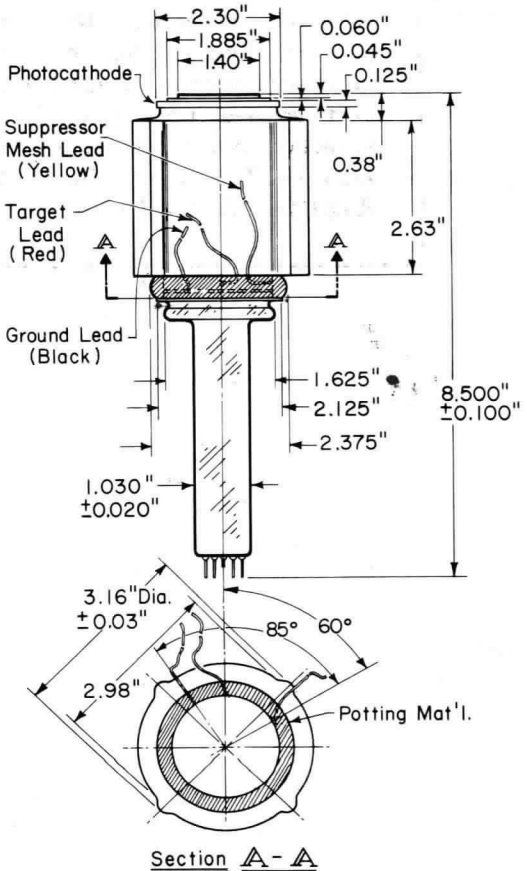

Index of Leads

Pin	*Electrode*
1	Heater
2	Grid 1
3	Grid 4
4	Internal Connection (DO NOT USE)
5	Grid 2
6	Grid 3
7	Cathode
8	Heater
9	Index Pin, Internal Connection (DO NOT USE)

WL-30691
SEC Camera Tube

All Magnetic Gun
Electrostatic Image Section
1" Image Diagonal

Increased Sensitivity can be obtained by fiber optically coupling the WL-30691 to a Westinghouse WX-30677 image intensifier. This combination provides about 100 times more sensitivity than that of the WL-30691 alone without compromising other important performance characteristics. The WX-30677 may be obtained separately or if perferred, it can be supplied already coupled to the WL-30691. For more information write or telephone the Image Tube Product Sales Manager, Westinghouse Electronic Tube Division, Post Office Box 284, Elmira, New York 14902. Telephone Area Code 607-739-7951.

Westinghouse Electric Corporation
Electronic Tube Division, Elmira, N. Y. 14902
Printed in U. S. A.

Westinghouse

WL-30893
SEC Camera Tube

All Magnetic Gun
Electrostatic Image Section
1″ Image Diagonal

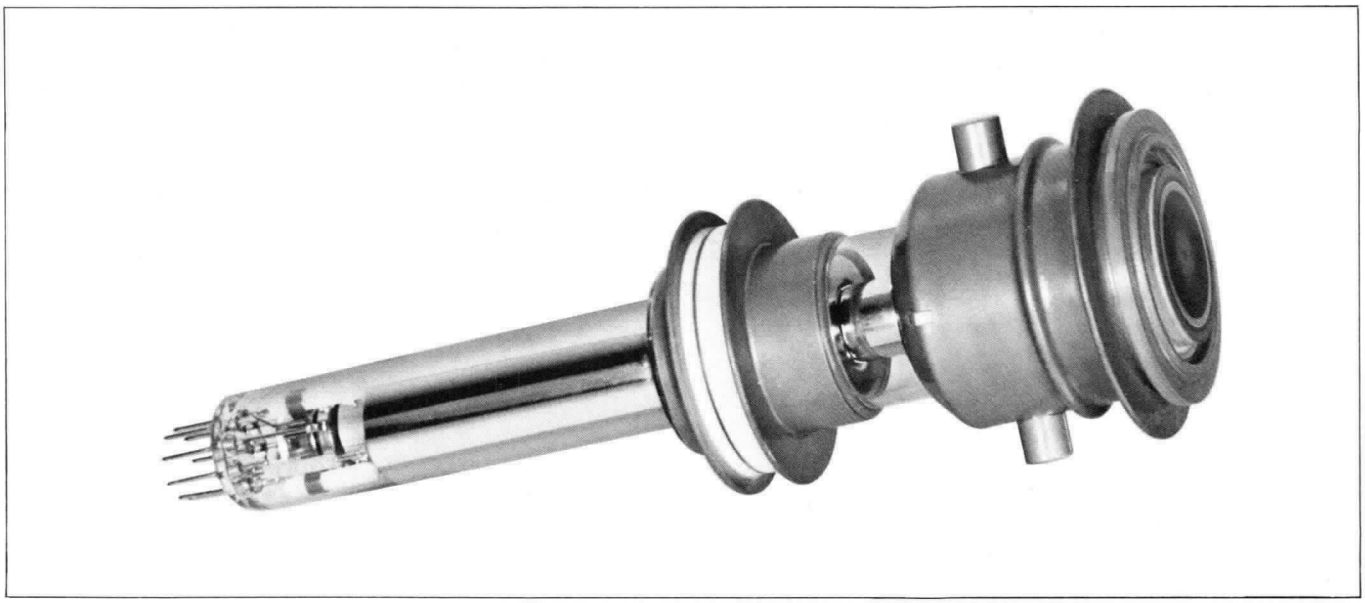

General Description

The WL-30893 is a compact SEC camera tube characterized by high sensitivity and resolution, low lag or persistence and simplicity of operation. A novel feature which distinguishes it and other SEC camera tubes from conventional camera tubes is the Secondary Electron Conduction (SEC) target[1T]. This target has high gain, excellent storage properties and retains only a very small percentage of its stored signal after a single scan of the reading beam.

Because of the unique properties of the SEC target, the WL-30893 is able to operate over a very wide range of scene illuminations and exhibits excellent sensitivity with moving as well as with stationary scenes. Localized regions of a scene which are sufficiently bright to cause saturation do not produce halation or blooming so that information from surrounding regions is not obscured. The excellent storage characteristics of the SEC target enable the integration of low light level images for extended periods of time.

The electrostatic image section remains in focus for all photocathode voltages and since the sensitivity of the tube varies with photocathode voltage, this feature provides a convenient means for gain control. Scan power and voltage considerations for the reading gun are similar to those for a standard 1″ all-magnetic vidicon. Suitable deflection yokes and focus coils are commercially available.

- **High Static & Dynamic Sensitivity**
- **Wide Dynamic Range**
- **Low Lag**
- **Fiber Optic Faceplate**
- **Excellent Integration & Storage**
- **Rugged, Compact Design**
- **No Halation or Blooming**
- **Low Power Consumption**
- **Broad S-20 Spectral Response**
- **Simple Operation**

The WL-30893 may be used in a color television camera where its high sensitivity permits reduced studio lighting and allows nighttime outdoor broadcasting at normal stadium levels of illumination. The low lag characteristic of the WL-30893 makes possible a field sequential color camera using a single tube. It may also be used in closed circuit television systems for the remote viewing of dimly illuminated scenes. The storage and integration characteristics permit its use, for example, in narrow bandwidth, slow-scan systems and are representative of the versatility which makes the WL-30893 suitable for a wide range of scientific and industrial applications.

The WL-30893 may be used directly with an optical lens system, or may be fiber-optically coupled to an image intensifier, such as the Westinghouse WL-30677, in order to achieve remote viewing at extremely low light levels. Alternatively the WL-30893 may be fiber-optically coupled to a suitable image converter to permit detection of X or UV radiation as well as near infrared radiation.

Principles of Operation

The WL-30893 SEC camera tube is schematically illustrated in Figure 1. It consists of an electrostatically focused diode image section, a Secondary Electron Conduction (SEC) target and a magnetically focused and deflected reading section. The semi-transparent S-20 photocathode is deposited on the inner surface of the plano-concave fiber optic faceplate. An optical image focused onto the plane surface

September 1971
Supersedes TD–86–818
PI–12 dated Sept. 1969
S6–9A–9E, TC–2237

Westinghouse

of the fiber optic faceplate, is conveyed to the photocathode where photoelectrons are emitted from the illuminated areas of the image in direct proportion to the amount of incident radiation.

The photoelectrons are accelerated towards the SEC target where they are brought to focus by the electrostatic lens formed between the photocathode surface and the anode cone. As the electron image is transferred from the photocathode surface to the target, it is reduced in size; the magnification is approximately 0.8.

The SEC target consists of a supporting membrane of Al_2O_3 approximately 500 Å thick followed by a 500 Å layer of aluminum, which forms the signal electrode. Deposited on this, and facing the reading gun, is a highly porous layer of KCl. By applying a positive potential to the aluminum signal plate and stabilizing the potential of the KCl surface at approximately gun cathode potential, (by scanning the KCl surface with the low velocity electron beam), an electric field can be established across the KCl layer.

Photoelectrons arriving at the target with energies of approximately 8 keV penetrate the Al_2O_3 and Al layers and dissipate most of their energy within the KCl layer by generating secondary electrons. An important feature of the SEC target is the release of secondary electrons into the vacuum interstices between the particles of KCl. Under the influence of the internal electric field the secondary electrons migrate in vacuum towards the signal plate. Conduction of the secondary electrons, therefore, takes place in *vacuum* and not in the *conduction band* of the KCl, thus avoiding the persistence effects caused by the trapping and subsequent release of charge carriers by shallow trapping centers. The movement of electrons within the KCl layer towards the signal plate creates a positive charge pattern which, in spacial distribution and intensity, corresponds to the optical image focused onto the tube faceplate. Because of the high resistivity of the low density target, the charge pattern can be stored for long periods of time.

The charging of the KCl layer is periodically interrupted by the scanning beam, which returns the KCl to gun cathode potential by depositing electrons on the positively charged areas. This current pulse, constituting the video signal, is capacitively coupled to the signal plate. The current flowing in the signal plate is used to develop a voltage across a load resistor which, after amplification, can be used to produce a video picture on a television monitor in the usual manner.

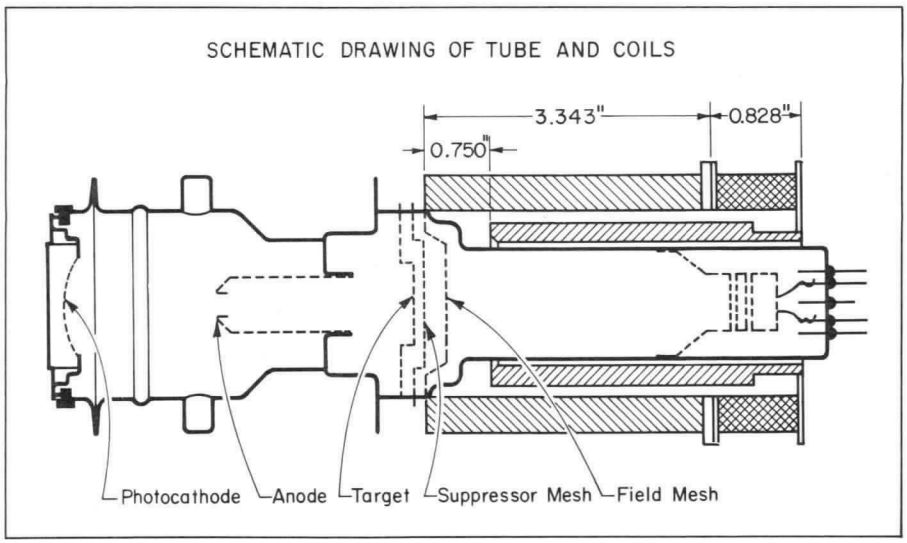

FIGURE 1

The low velocity electron beam which scans the target is produced by an electron gun consisting of an indirectly heated thermionic cathode, a control grid (G1), and an accelerating grid (G2). The beam is focused at the surface of the target by the combined action of the uniform magnetic field of an external coil and the electrostatic field of G3. A field mesh (G4) serves to provide a uniform decelerating electrostatic field to the target.

A second mesh electrode, G5 (suppressor mesh) is positioned close to the target surface. The purpose of this mesh is to control the potential of the SEC target. It is normally operated at a potential just below the "crossover" potential for KCl (approximately 15 volts). Alignment and deflection of the beam is accomplished by transverse magnetic fields produced by external coils. (See Figure 1).

Performance Data

General

Specific performance parameters are discussed in the paragraphs that follow. For parameters where the performance varies from tube to tube, both a minimum and a typical value are given. The minimum value means that all tubes will equal or exceed that performance. The typical value is obtained by averaging a given performance parameter over a large number of tubes. Thus any given tube will provide at best, minimum performance for all parameters and may provide typical performance for one or more parameters.

Spectral Response and Sensitivity

The WL-30893 employs an S-20 photosurface deposited on a dark clad fiber optic faceplate. A typical spectral response for this faceplate-photosurface combination is shown in Figure 2. The peak quantum efficiency ranges from 15 to 20% and falls within the wavelength interval of 4200 to 4600 Å.

The high quantum efficiency of the S-20 photocathode and the high gain of the SEC target provides a typical sensitivity of 45μA/fc, minimum 35 μA/fc, at a faceplate illumination of 10^{-3} fc (See Figure 3). Since the optical image size is 0.6" x 0.8" this corresponds to a typical sensitivity of 13,500μA/lm.

Light Transfer Characteristic

The light transfer characteristic of the WL-30893 is shown in Figure 3. The gamma varies from nearly one at lower light levels to about 0.6 at light levels approaching 10^{-2} fc. At higher light levels, the target saturates at a surface voltage essentially equal to that of the suppressor mesh (G5). Although this provides a "knee" in the transfer curve, the light levels associated with the "knee" may cause image

WL-30893
SEC Camera Tube

All Magnetic Gun
Electrostatic Image Section
1" Image Diagonal

"burn-in" after prolonged exposure (see paragraph titled "Maximum Exposure Levels"). However, the tube may be safely operated at this and higher light levels by reducing the photocathode voltage.

The transfer function of Figure 3 applies for a standard 1/30 second frame rate, 525 line interlaced scan with both the photocathode and target voltages adjusted for optimum performance. Under these conditions the tube will provide a highlight signal current of at least 200 nA. At full gain the peak signal to rms noise ratio, limited primarily by photon shot noise is about 25 for a bandwidth of 7 MHz. At reduced gain, the signal-to-noise ratio is limited primarily by the preamplifier noise current. In this mode of operation a signal-to-noise ratio of about 50 can be obtained if a suitable preamplifier is used (see section entitled "Systems Considerations"). The equivalent visual signal-to-noise ratio[2] is about 150 or 44 db. These signal-to-noise ratios correspond to a dynamic range extending over two orders of magnitude in light level.

The excellent storage characteristics of the target make the WL-30893 ideally suited to slow scan applications. The narrow bandwidths associated with slow scanning provide smaller noise currents. However, this advantage is offset by the fact that with continuous slow scanning the highlight signal current is reduced in proportion to the increase in frame time. This reduction in highlight signal current can be avoided by using digital scanning techniques where the beam rapidly scans a single resolution element and is then brought to rest before being pulsed to scan the following resolution element.

The gain of the SEC target increases with target voltage. Dark current is non-existent over the entire range of useful target voltages. Practical limits to the maximum target voltage are imposed by the onset of lag and the appearance of target grain. The optimum target voltage is specified in the test data supplied with each tube. Although some degree of gain control can be achieved by operating the target at lower voltages, this approach is not recommended because the storage capacity and, therefore, the highlight signal current decreases with decreasing target voltage.[3]

Gain Control

Effective gain control can be accomplished by varying the photocathode voltage. The relative small signal target gain, as a function of photocathode voltage, is shown in Figure 4. Varying

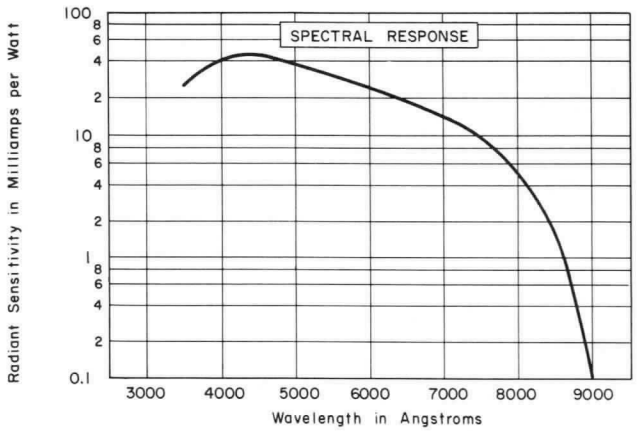

FIGURE 2

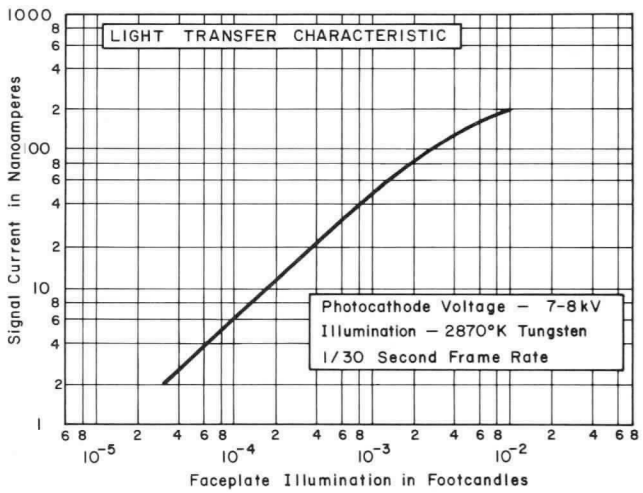

FIGURE 3

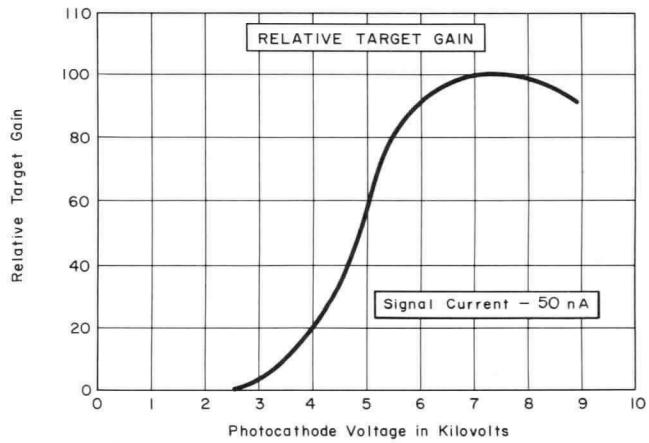

FIGURE 4

Westinghouse

the photocathode voltage from 3.5 to 7.5 kV provides a gain control range of at least 10 to 1 with no perceptible loss in resolution and an image rotation of about 1°. A larger range can be obtained by further reducing the photocathode voltage; however, the picture quality is gradually degraded by the appearance of grain.

Resolution

Figure 5 shows the typical uncompensated square wave response for the WL-30893. The amplitude responses at 200 and 400 TV lines per picture height are at least 60% and 25% respectively. No significant variation in the modulation transfer function occurs for photocathode voltages ranging from approximately 3.5 to 8 kV. With a well designed preamplifier the typical limiting resolution is 700 TV lines per picture height. Best corner resolution is obtained by dynamically focusing the G3 electrode with a waveform of approximately 10 volts amplitude. Under these conditions the limiting corner[4] resolution is typically 500 TV lines per picture height.

Lag Characteristics

The signal generating mechanism of the SEC target is essentially lagless because conduction of the secondary electrons across the storage layer takes place in vacuum rather than in the conduction band. The small amount of lag that is observed is believed to be caused by the stored charge residing within the KCl layer rather than on the surface. This limits the beam acceptance resulting in a discharge lag. At higher target voltages, the stored charge penetrates further into the layer resulting in increased lag. Figure 6 shows the lag characteristic for a typical tube operated at optimum target voltage and at a signal current of 100 nA.

In the first frame, more than 90% of the signal is read out, leaving less than 10%, typically 5%, to be read out in the second frame. In the third and succeeding frames, the residual signal is unperceptible. This performance is significantly better than that of the vidicon.

The dependence of lag on signal current is shown in Figure 7. At lower light levels, the lag increases primarily because of the poorer beam acceptance associated with the lower voltage excursions on the target surface.

The relative freedom from lag provides the WL-30893 with a dynamic sensitivity which is only slightly less than its static sensitivity. This

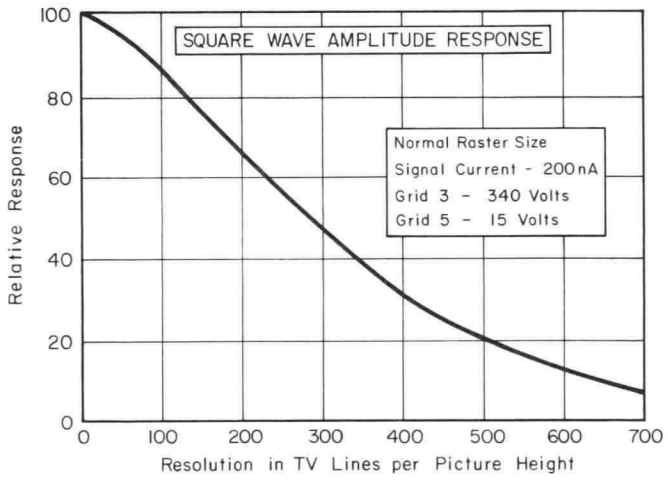

FIGURE 5

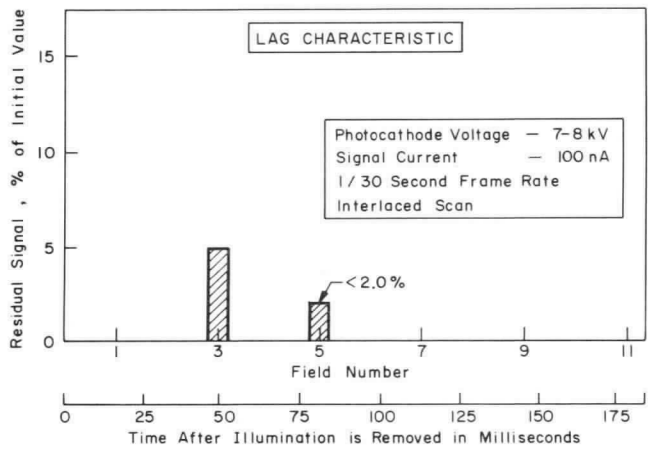

FIGURE 6

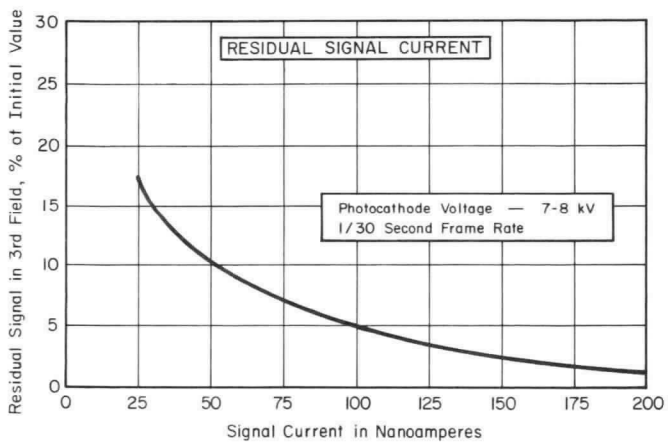

FIGURE 7

WL-30893
SEC Camera Tube

All Magnetic Gun
Electrostatic Image Section
1" Image Diagonal

is illustrated in Figure 8 which shows the limiting resolution as a function of light level for both stationary and moving scenes. In one case, the image moved across the picture width in a 20-second period. In order to obtain the same resolution with the dynamic scene, it is necessary to increase the light level by about a factor of 3. Under similar circumstances, the image orthicon requires an increase in light level of about a factor of 100.[5]

Low Contrast Sensitivity

The sensitivity illustrated in Figure 8 was concomitant with a 100% scene contrast. However, in most practical applications, the scene contrast is considerably less than 100% and, in such cases, the sensitivity of the tube to low contrast scenes becomes very important. The low contrast sensitivity of the WL-30893 is excellent and is shown in Figure 9. Over the linear region of the characteristic, where preamplifier noise predominates, the illumination required to achieve a given resolution is approximately inversely proportional to the contrast. When performance is photon shot noise limited, as in the case where an image intensifier is coupled to the camera tube, this relationship becomes an inverse square dependence.

Point Source Imaging

Point source imaging characteristics have been measured for a number of different SEC camera tube types, and have been found to be substantially independent of the tube type.[6] Both the sensitivity, that is the minimum number of radiation quanta sufficient to produce a signal detectable on a television monitor, and the dynamic range of point source detection are important parameters.

The WL-30893, operating in a system with a 3 nA noise current, can detect a signal of about 600 photoelectrons per integration period. For a photocathode with a 15% quantum efficiency, this would correspond to the arrival of 4000 photons at the faceplate of the tube. No significant deviations from perfect reciprocity occur for integration periods of at least several minutes (See Figure 10). Increased threshold sensitivity may be achieved by increasing the target voltage by approximately 2 volts between integration and read out of the stored signal. In this way the beam resistance is reduced and the co-planar biasing caused by the negatively charged unexposed areas of the target can be eliminated.

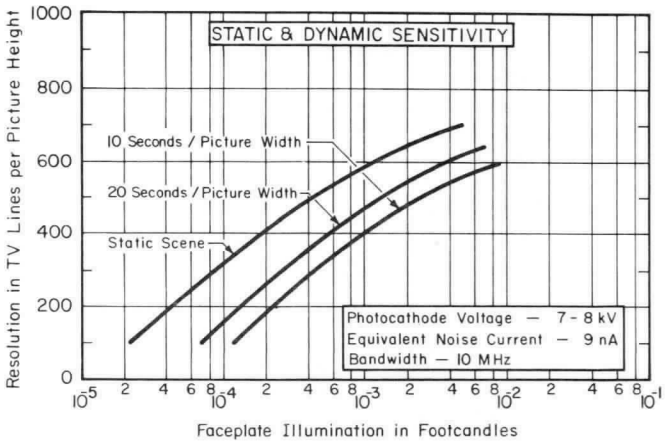

FIGURE 8

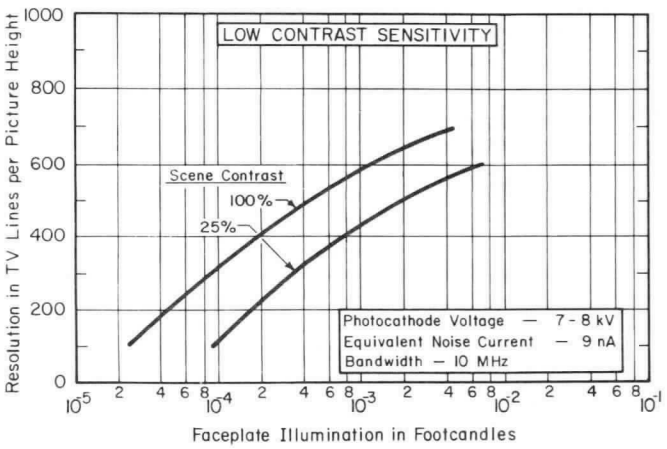

FIGURE 9

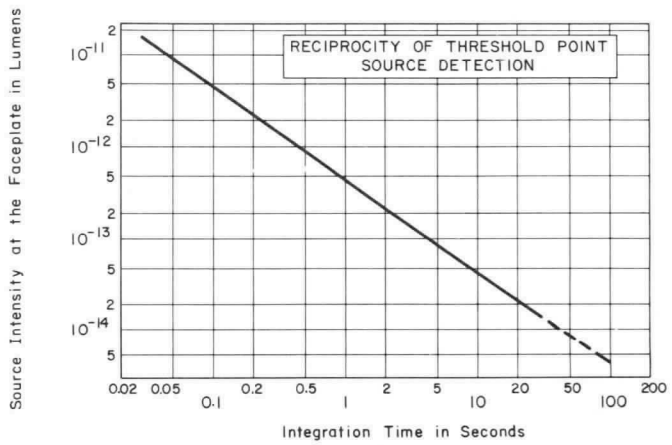

FIGURE 10

Westinghouse

The dynamic range is limited by the point at which physical spreading or blooming of the point image becomes "objectionable". Figure 11 shows the dependence of the diameter of the image point on the intensity of the source. The curve compounds the results of a number of independent measurements and shows that the diameter of the point image varies approximately with the 0.2 power of the source intensity. For example, the diameter of the point image increases by a factor of approximately six when the source intensity increases from threshold by a factor of four orders of magnitude. This performance may be contrasted with that of the image orthicon where the same degree of point spreading occurs for only one order of magnitude in intensity above the threshold.[7]

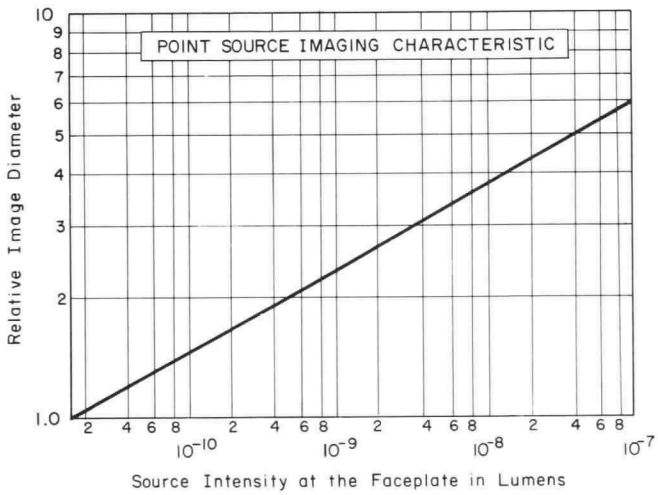

FIGURE 11

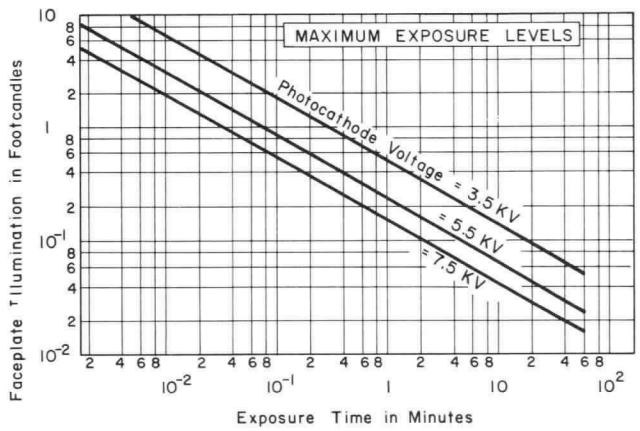

FIGURE 12

Integration and Storage

The SEC target used in the WL-30893 has an extremely high resistivity. Thus a signal can be integrated over a period of several minutes without degradation due to target leakage. The maximum integration period is limited only by spurious emission in the image section of the tube which, after long periods, can saturate the target. With selected tubes, integration times of up to thirty minutes are possible. Throughout the entire exposure, the tube shows excellent reciprocity in light level and exposure time. The ability to integrate over such long periods effectively increases the sensitivity of the tube by a factor of several thousand without compromising other performance parameters.

Once a signal has been integrated, it can be stored for many hours provided the photocathode voltage is turned off. The stored signal can then be read out in essentially one frame at any convenient scan rate.

Maximum Illumination Levels

If any excessive amount of energy is dissipated in the SEC target, the target suffers a loss of gain, resulting in a permanent negative image (burn-in). Damage can be caused by either an excessive target voltage or by unduly high light levels. In the first case, damage can be avoided by maintaining the target voltage at or below the value recommended in the data supplied with the tube. Damage associated with high light levels also depends on the photocathode voltage and the exposure time. These relationships are illustrated in Figure 12. The curves represent the maximum energy exposure that can be tolerated without danger of permanent target damage for various photocathode voltages. For example, at a photocathode voltage of 5.5 kV, a high light photocathode illumination of 1/5 footcandle can be tolerated for periods of up to 1 minute without "burn-in". For a lens at f/11 this illumination corresponds to a scene brightness of about 120 fL. Longer exposure times may result in permanent damage. It should be noted that, in most cases, exposures at or near those described by the curves of Figure 12, may cause a temporary loss in gain. However, recovery is complete within a period of several minutes.

Uniformity and Distortion

Shading in the WL-30893 is caused mainly by the slight radial change in magnification in the image section. The photocurrent density incident on the target varies with the square of the magnification. Since the magnification is slightly larger at the edges, the current density there is reduced, resulting in a lower signal current. The video signal uniformity, defined as the percentage deviation from the maximum signal level and measured across a horizontal line at the center of the picture, is typically 25%.

Geometric distortion is typically 2%. It is measured with an EIA linearity chart in accordance with IEEE Standard Number 202.[8]

Picture Quality

Over the recommended operating ranges of the WL-30893, there are no signal redistribution

WL-30893
SEC Camera Tube

All Magnetic Gun
Electrostatic Image Section
1" Image Diagonal

General Data

Faceplate . . . . . Fiber Optic
Numerical Aperture 1.1
Useful Diameter . . . . . 1.0"
Photocathode . . . . . .S-20 (Figure 2)
Image Section:
Focusing Method . . . . . .Electrostatic
Configuration . . . . . Diode
Target Shunt Capacity. . . . 23 pF typ.
. . . . 30 pF max.
Reading Section:
Focusing Method . . . . . .Magnetic
Deflection Method . . . . . Magnetic
Deflection Yoke - Focusing Coil
Alignment Coil Assembly. . . #1486-1*
Cathode. . . . . Indirectly Heated
Heater Power. . . . . .1 Watt
Base . . . . . JEDEC E8-11
Socket #1339711013 (Cinch Mfg. Co.)
Overall Length . . . . . .9.2 Inches
Maximum Diameter. . . . . 2.80 Inches
Diameter of Reading Gun Bulb. . .1 Inch
Weight (Unpotted). . . . . 0.6 Pounds
Operating Position . . . . . Any
*1" SEC Deflection Assembly
Penn-Tran Corp.
Bellefonte, Pa.

Image Size at the Faceplate: 0.6" x 0.8"
Direction of Scan: Parallel to a Line Joining Axis of Tube to Target Lead.

Operational Data	Maximum Rating	Typical Operation	Units
Photocathode Illumination	See Figures 3 and 11		
Photocathode Voltage	−9	−7.5	Kilovolts
Anode Cone Voltage	NA*	Ground	—
Target Voltage (Reference 9)	30	10 to 20	Volts
Grid 5, Suppressor Mesh, Voltage (Reference 10)	40	15	Volts
Grid 4, Field Mesh, Voltage (Reference 11)	400	360	Volts
Grid 3, Focus Electrode Voltage	400	340	Volts
Grid 2, Accelerator, Voltage	350	300	Volts
Grid 1, Voltage	−150 +0	−40	Volts
Heater Voltage	6.9	6.3	Volts
Peak Heater to Cathode Voltage:			
Heater Negative	125	NA*	Volts
Heater Positive	10	NA*	Volts
Minimum Peak-to-Peak Blanking Voltage Applied To:			
Cathode (Positive Pulse)	NA*	30	Volts
Grid 1 (Negative Pulse)	NA*	80	Volts
Cathode Voltage	NA*	Ground	—
Magnetic Focusing Field (Center of Coil)	NA*	40	Gausses
Magnetic Alignment Field	NA*	0 to 4	Gausses
Peak Deflection Current for Specified Yoke:			
Horizontal	NA*	200	mA
Vertical	NA*	50	mA
Peak Signal Current (Reference 13)	400	NA*	nA

* Not Applicable

effects so that a signal in a given area is essentially independent of the signal in a neighboring area. Thus, the tube is free of halation. Slight blooming, or image growth, occurs at very high light levels due to the beam bending associated with excessive voltage excursions at the target surface.

All tubes are free of fixed pattern noise, such as smudges or demarcation lines. The maximum number and distribution of small area blemishes are defined in the table below:

	Zone 1	Zone 2	Zone 3
All Blemishes	1	3	15
Blemishes with a major dimension of 7 or 8 television lines	0	1	4

The zones are defined as follows:

Zone 1 . . . . . Central 10% of raster area.
Zone 2 . . . . . Central 20% of raster area.
Zone 3 . . . . . Entire raster area.

These blemishes are generally bright spots and are defined as any spurious signal whose major dimension covers three or more television lines. No blemish whose major dimension covers nine or more television lines is permitted anywhere in the raster.

Life and Environmental Characteristics

Various SEC tube types have been used in a wide variety of applications. Depending on the loading and environmental conditions these tubes have shown useful lifetimes of from one thousand to several thousand hours. These tubes do not require an extended warm-up period and show highly reproducible performance even at operating temperatures as low as −54°C or as high as +55°C. The only performance parameter which may change with extended operation is sensitivity which decreases at most by one f-stop. When stored under suitable conditions, e.g. a clean dry environment at room temperature, the tube remains stable and shows an extremely long shelf-life.

The WL-30893 has been designed for use in systems which must operate under the environmental conditions described in military specification Mil-E-5400K. The rugged design of the tube is compatible with even the most severe system vibration levels, (curve IV, of the specification). However, care must be taken in the design of the camera head to ensure that resonances, which could produce microphonics, are avoided by the use of suitable isolators.

Operating and Handling Considerations

Important Precautions

1. *The tube is supplied with an external voltage limiting device connected between the SEC target and the suppressor mesh (G5). This should not be disconnected, as its purpose is to protect the target from permanent damage which could be caused by the accidental application of a high voltage (e.g. from an electrostatically charged human operator).*

2. *The target and suppressor voltages recommended with each tube should not be exceeded.*

3. *The tube should not be operated at exposure levels greater than those illustrated in Figure 12.*

Westinghouse

4. *The horizontal and vertical deflection power should be adjusted to ensure that the target is either normally scanned or over-scanned before the reading beam is turned on. Avoid underscanning.*

Set-up Procedure

As long as the above precautions are taken, the tubes can be set up and operated in a manner similar to that of a vidicon. No special "warm-up" time is required. The sequence given below is recommended as a convenient set-up procedure.

1. Install the tube in the camera head using the focus, deflection, and alignment coil positions shown in Figure 1. The polarity of the focusing coil should be such that an externally positioned north seeking pole is attracted to the target end of the focusing coil with the indicator placed outside of and at the target end of the coil. It is also recommended that a 1" diagonal rectangular mask with a 4:3 aspect ratio be used to prevent light reaching unused parts of the photocathode.
2. Make connections to all electrodes and apply deflection voltages sufficient to over scan the target.
3. Apply maximum negative bias to G1. Apply voltages to the heater, focusing coil and alignment coils.
4. Apply the recommended voltages to G2, G3, G4, G5, and target.
5. Apply approximately 10^{-4} fc uniform illumination to the faceplate of the tube. Turn on photocathode voltage and adjust the G1 voltage until the beam current is sufficient to discharge the target.
6. Center and focus a test pattern on the faceplate of the tube so that the image size is 0.8" x 0.6". The illumination level should be adjusted to about 10^{-3} fc.
7. Adjust the deflection amplitude and centering controls such that the target ring is just visible in the corners of the picture. Then further decrease the deflection power until the test chart completely fills the picture.
8. Adjust the G3 beam focus control and optical focus alternately until no further improvement in picture quality is obtained. The G4 voltage should always be maintained above that of G3 to prevent positive ions generated in the G3 drift space from landing on the target.

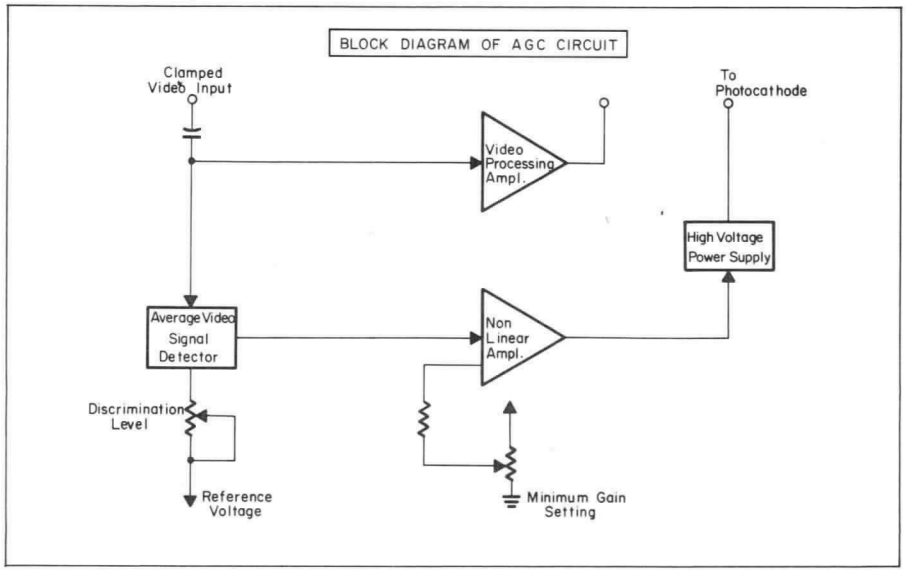

FIGURE 13

9. Adjust alignment currents for best beam landing in the following manner. Reduce the G5 voltage to a value just above the threshold for beam landing. Adjust the alignment current to center and maximize the area over which the beam can land. If a G5 voltage of more than 1 or 2 volts is needed for beam landing over the entire raster, check the positions of the focusing and deflection coils.
10. Return G5 voltage to recommended value, check G3 and optical focus.

Note:

If the target "crosses over" during the operation, manifested by the appearance of a black area on the television monitor, the recommended procedure for returning to normal operation is to reduce the G5 voltage temporarily to about 10 volts and either reduce the faceplate illumination or increase the beam current.

Shutdown Procedure

The only important feature of the shutdown procedure is that the deflection power should be switched off only after the reading beam has been switched off. The recommended sequence is:

1. Turn off all voltages except the deflection supplies.
2. Turn off deflection power.

Systems Considerations

System requirements for the WL-30893 are similar to those for a standard 1" magnetically deflected and focused vidicon. Only two additional voltages are required; one for the operation of the electrostatic image section and one for the suppressor mesh electrode (G5). The mesh, operated at about 15 volts, may be supplied by a voltage divider across the conventional gun supply.

Both this supply and the power supply used for the focus coil should be regulated to a level of 0.1% or less. Similarily, ripple should not exceed 0.1%.

The suppressor and field meshes should be maintained at AC ground to prevent pickup of spurious signals. A suitable network to decouple the suppressor mesh is incorporated into the tube. A similar network should be located as close as possible to the field mesh electrode in the camera.

Because the focus of the image section is independent of photocathode voltage, regulation for this supply is not critical. However, ripple is objectionable because it can be coupled into the video signal. It is recommended that the ripple should not exceed 0.1%. Automatic gain control can be accomplished by sampling the video signal and using a feedback network to regulate the photocathode voltage. A block diagram of such a network is shown in Figure 13.

WL-30893
SEC Camera Tube

All Magnetic Gun
Electrostatic Image Section
1" Image Diagonal

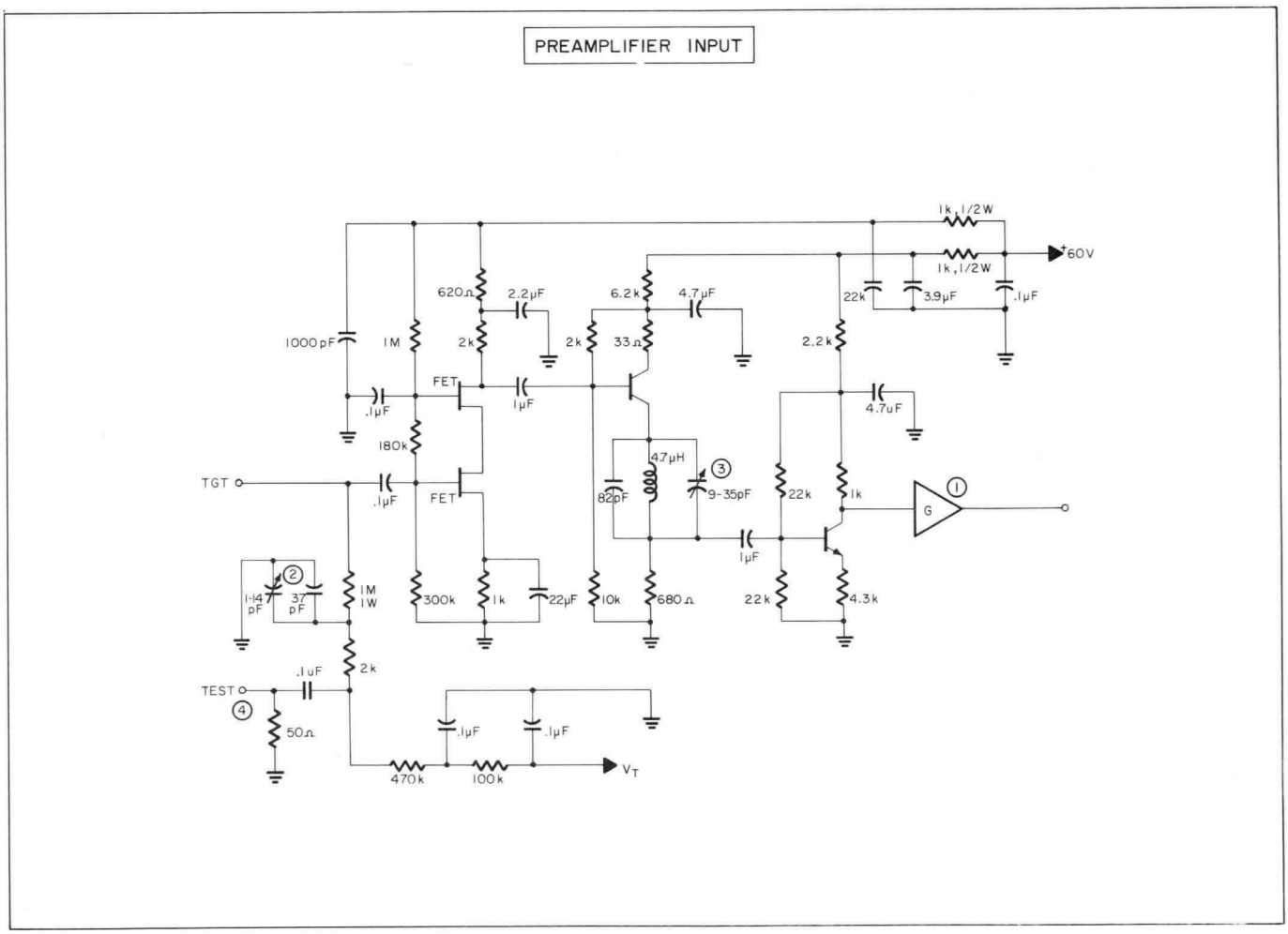

FIGURE 14

Dynamic focusing and the reduction of shading can be accomplished using techniques similar to those used with standard all-magnetic vidicons. Dynamic focusing requires a 15 volt wave form applied to G3. Shading can be essentially eliminated by applying a parabolic negative going voltage pulse to the thermionic cathode gun triode.

Provision should be made in the design of the camera head to shield the target from external magnetic and electrostatic fields which could introduce perturbations into the signal current. The magnetic fields produced by the focus and deflection coils may be shielded by thin mu-metal discs positioned at the target ends of both coils.

Care should be taken in the design of the camera head to minimize resonances which could introduce microphonics. The manner in which the tube is mounted is also important in minimizing microphonics. For severe vibration environments it is recommended that the rear flange of the target-mesh section of the tube be clamped firmly to the focus and deflection coil assembly. Both the gun and the image section should also be supported in order to avoid a cantilevering effect. As an option (see page 11) the image section can be supplied with an encapsulating silicon rubber compound. This facilitates mounting and also tends to reduce resonances in the image section flanges.

In order to maximize the signal-to-noise ratio, it is important to keep the equivalent input noise current of the preamplifier as low as possible. For a shunt capacity of 30 pF and a bandwidth of 7.5 MHz equivalent noise currents of 4 nA RMS have been obtained using standard low noise cascode input circuits.For references on the design of low noise preamplifiers, see Note 12. Figure 14 shows a suggested design for a cascode type input to a preamplifier, using field effect transistors. The 9-35 pF variable capacitor may be used to adjust for variation in the camera tube and preamplifier input capacities. The test terminal may be used to inject a test or compensating signal. The input test signal is compensated by adjusting the 1-14 pF variable capacitor.

Westinghouse

Notes & References

An annotated bibliography of published work relating to the SEC target and to SEC camera tubes has been prepared by Westinghouse. Copies may be obtained by writing to Westinghouse Electronic Tube Division, Box 284 Elmira, N. Y. 14902.

1. (a) Boerio, A.H., Beyer, R.R., and Goetze, G.W.-"The SEC Target", Advances in Electronics and Electron Physics, Academic Press, Vol. 22A, pg. 229 (1966).

   (b) Goetze, G.W. and Boerio, A.H.-"Secondary Electron Conduction (SEC) For Signal Amplification and Storage in Camera Tubes", Proc. IEEE, Vol. 52, pg. 1007 (1964).

   (c) Goetze, G.W. -"Secondary Electron Conduction (SEC) and its Application to Photoelectronic Image Devices"- Advances in Electronics and Electron Physics, Academic Press, Vol. 22A, pg. 219 (1966).

2. The equivalent visual signal-to-noise ratio is the ratio of high light video signal current to RMS noise current, multiplied by a factor of 3. [CCIR, International Radio Consultative Committee, Television Standards; Vol. 5 (1966).] An RMS noise current of 5 nanoamperes is assumed for the video preamplifier operating at a bandwidth of 8 MHz.

3. See Reference (a) of Note 1.

4. The corner resolution is measured at any point on the circumference of a circle whose diameter is 50% of the raster diagonal and concentric with the tube axis.

5. (a) Parton, J.S. and Moody, J.C.-"Performance of Image Orthicon Type Intensifier Tubes", Image Intensifier Symposium, Fort Belvoir, Virginia, NASA SP (1961).

   (b) Anderton, H. and Beyer, R., Dynamic Imaging With Television Cameras. Paper presented at the 4th Symposium on Photoelectronic Image Devices, Imperial College, London 1968. To be published in Advances in Electronics and Physics, Academic Press.

6. (a) Beyer, R.R., Green, M. and Goetze, G.W. - "Point-Source Imaging with the SEC Target", Advances in Electronics and Electron Physics, Academic Press, Vol. 22A, pg. 251 (1966).

   (b) Marshall, F.B. and Roane, G.D. - "Performance Comparison of the SEC Camera Tube and the Image Orthicon" - Advances in Electronics and Electron Physics, Academic Press, Vol. 22A, pg. 291 (1966).

   (c) Neal, B - SEC Vidicons - Sole Site Results. - Unpublished Report.

7. Livingston, W.C.-Journal of the Society of Motion Picture Television Engineers, Vol. 72, pg. 771 (1963).

8. IEEE Standards on Television: Methods of Measurement of Aspect Ratio and Geometric Distortion", 202 (54-IRE2351).

9. The recommended target voltage is printed on a data sheet which accompanies each tube.

10. The function of the G5 electrode is to control the potential to which the target surface can rise. If the potential of the G5 electrode is set at a value higher than that of the crossover potential for KCl (approximately 15 volts) and if, because of a very bright exposure the target surface potential does rise above the crossover, then reading beam electrons will land on the target with sufficient energy to cause a net flow of electrons away from the target until the potential stabilizes at that of G5. The target will then fail to discharge and will produce a black area on the monitor. Operating the target in the "crossed over" mode is not recommended since it can lead to an increase in target grain. In order to discharge the target and resume normal operation, the G5 potential should be temporarily reduced to about 10 V.

11. It is recommended that the potential of the G4 electrode be maintained above the potential of G3.

12. (a) James, I.J.P. - "Fluctuation Noise in Television Camera Head Amplifier", Proceedings of IEEE, Vol. 99, No. 20 (1957) p. 796.

    (b) "Fundamentals of Television Engineering" - G.M. Glasford McGraw Hill, pp. 111 - 124 (1955).

13. The maximum rating of 400 nA for the peak signal current should not be confused with the value quoted for the maximum high light signal current (see paragraph entitled Light Transfer Characteristic). The maximum rating quoted here is a figure suggested for the system designers use and is an estimate of the maximum possible signal current that the tube is capable of providing for a short period of time.

WL-30893
SEC Camera Tube

All Magnetic Gun
Electrostatic Image Section
1″ Image Diagonal

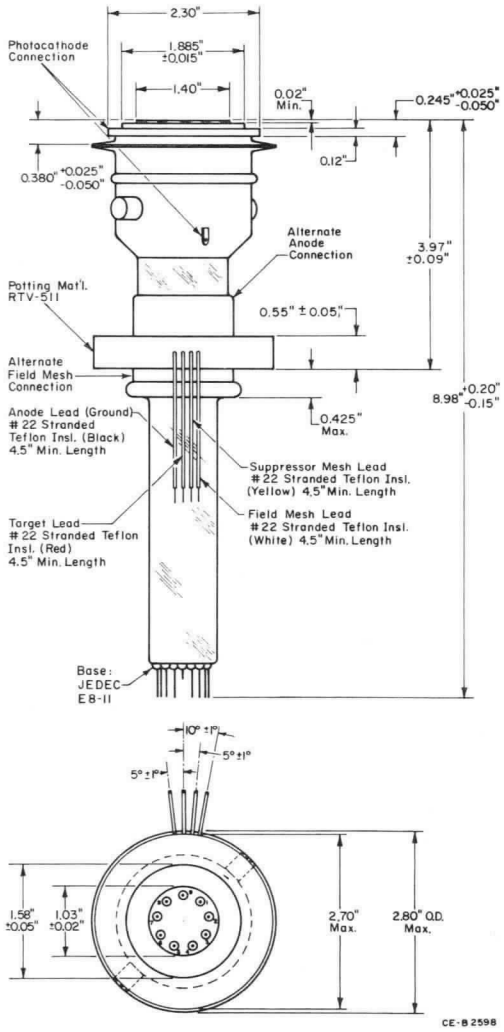

Option

If desired, in order to facilitate mounting, to provide environmental protection against humidity and to reduce the possibility of external voltage breakdown, the WL-30893 can be supplied with the image section encapsulated in a silicon rubber compound. The material used is GE RTV 511. The dimensional outline of the encapsulated tube is shown below.

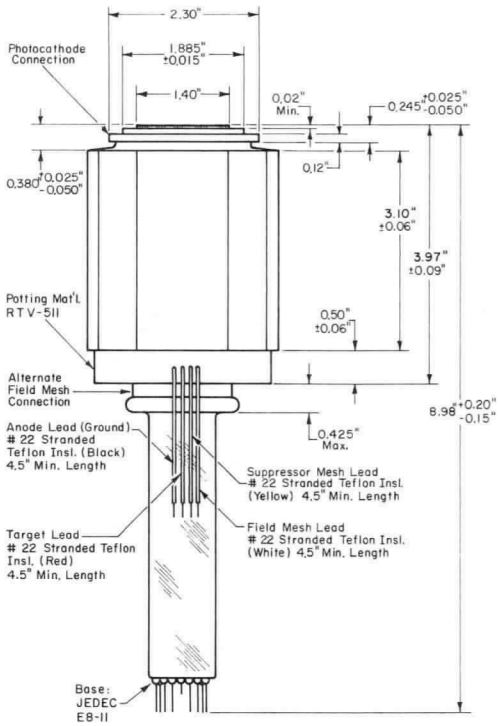

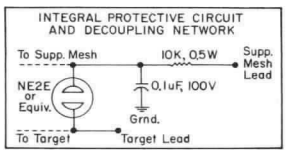

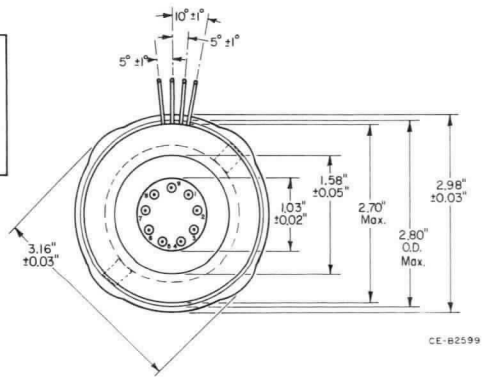

Index of Leads

Pin	*Electrode*
1	Heater
2	Grid 1
3	NC
4	Internal Connection (DO NOT USE)
5	Grid 2
6	Grid 3
7	Cathode
8	Heater
9	Index Pin, Internal Connection (DO NOT USE)

WL-30893
SEC Camera Tube

All Magnetic Gun
Electrostatic Image Section
1″ Image Diagonal

Increased Sensitivity can be obtained by fiber optically coupling the WL-30893 to a Westinghouse WL-30677 image intensifier. This combination provides about 100 times more sensitivity than that of the WL-30893 alone without compromising other important performance characteristics. The WL-30677 may be obtained separately or if perferred, it can be supplied already coupled to the WL-30893. For more information write or telephone the Manager, Image Tube Sales, Westinghouse Electronic Tube Division, Post Office Box 284, Elmira, New York 14902. Telephone Area Code 607-739-7951.

The information contained herein is supplied without assuming responsibility for infringement of patents or other rights of third parties which may result from its use. No license is granted by implication or otherwise under any patent or patent rights of Westinghouse Electric Corporation.

Westinghouse Electric Corporation
Electronic Tube Division, Elmira, N. Y. 14902
Printed in U.S.A.

Westinghouse

Display Storage Tube

Two Writing Guns
High Contrast

Type WX-31016 ▲
4" Display Diameter
Electrostatic Focus & Deflection
1800 Foot-Lamberts Display Brightness
70 Lines/Inch Resolution

Application

The WX-31016 Display Storage Tube was developed to permit high contrast, high brightness displays without the use of high voltage pulsing of the viewing screen. As well as extending the usefulness of DSTs in radar displays – permitting direct display of target information against a non-illuminated background – the WX-31016 makes practical without the usual loss of low level halftones the display of information requiring high erase pulse duty cycles.

A typical application is the display of television images where complete erasure must be achieved frame-by-frame to prevent smearing of moving objects. In this application, the WX-31016 will display 7 halftones with a highlight brightness of 800 foot lamberts and a resolution of 125 TV lines per inch (350 TV lines per raster height on a 3.6 inch H by 2.7 inch V raster sweeping at 15750 cps H and 60 cps V, interlaced 2:1.) Application to the suppressor grid of an 80 volt negative pulse train in synchronism with the erase pulse train prevents the background brightness normally caused by the erase pulse train. The alternative to this approach is pulsing of the viewing screen of a conventional DST from its rest potential of 8000 or 10000 volts to approximately 2000 volts in synchronism with the erase pulse train. Display quality is approximately equal with either approach except for a lower gamma in the WX-31016 when employing suppressor grid pulsing.

Factory pre-collimated to the point of optimum display uniformity, the WX-31016 requires no collimation setup procedure either at initial installation or during field replacement. An external magnetic shield, bonded to the tube envelope with a non-nutrient silicone rubber compound, prevents disturbance of the pre-collimated display due to stray magnetic fields up to 10 gauss.

The combination of high brightness, high contrast and low gamma coupled with the ability to operate reliably under extremes of temperature, pressure and vibration, makes the WX-31016 particularly well suited for applications in high performance aircraft requiring alternate display of radar (with complex symbology) and television information in the same indicator. More specialized displays are possible through the use of the two identical writing guns in the WX-31016.

Electrical

Storage

Type	Half-Tone or Line
Mode	Control of Transmission
Erasure	Overall

Write Guns

Cathode	Coated Unipotential			
Heater:	Min.	Nom.	Max.	
Voltage	5.67	6.3	6.93	Volts
Current	0.50	0.60	0.70	Ampere
Focusing Method				Electrostatic
Deflection Method				Electrostatic

Flood Gun

Cathode	Coated Unipotential			
Heater:	Min.	Nom.	Max.	
Voltage	5.67	6.3	6.93	Volts
Current	0.50	0.60	0.70	Ampere
Warm-up Time	60	–	–	Seconds

Direct Interelectrode Capacitances

External Integral Shield Grounded
All Internal Elements to:

Write Gun Grid 1	15 max.	pF
Write Gun Cathode	8 max.	pF
D1	10 max.	pF
D2	10 max.	pF
D3	10 max.	pF
D4	10 max.	pF
Suppressor Electrode	350 max.	pF
Backing Electrode	350 max.	pF

Optical

Phosphor	High Visual Efficiency, Aluminized P 20
Fluorescence	Yellow-Green
Phosphorescence	Yellow-Green
Persistence (See Fig. 1 & 2)	Short
Faceplate	Optical Glass, Ground & Polished Flat

Mechanical

Min. Useful Viewing Dia.	4"
Max. Overall Length	16"
Greatest Shield Dia.	5.25" ± 0.03"
Caps on Large End of Bulb:	
Backing Electrode	EIA J1-22
Suppressor Electrode	EIA J1-22
Positive Input Electrode	EIA J1-22
Base	EIA B25-216
Mounting Position	Any

Environmental Limits

Atmospheric Pressure	60 max. P.S.I.
Altitude (Non-Pressurized)	60000 max. Feet
Temperature:	
Operating	–35 to +71 °C
Non-Operating	–62 to +85 °C
Relative Humidity (Non-Operating)	95 %

Vibration: Sinusoidal vibration from 5 to 18 hertz with a total excursion of 0.30" and from 18 to 500 hertz with 3 G acceleration will not damage the tube.

Absolute Maximum Ratings

Write Guns

Voltages are with respect to Write Gun Cathode

Grids 2 & 4 Voltage (Note 1)	2750	max.	Volts
Grids 2 & 4 to Reference Input Voltage	200	max.	Volts
Grid 3 (Focus) Voltage	2000	max.	Volts
Grid 3 to Reference Input Voltage	–2600	max.	Volts
Grid 1 Voltage:			
Negative Bias Value	200	max.	Volts
Positive Bias Value	0	max.	Volts
Positive Peak Value	2	max.	Volts
Cathode to Reference Input Voltage	–2800	max.	Volts
Voltage Between Any Defl. Electrode and Grids 2 & 4	500	max.	Volts
Peak Heater to Cathode Voltage	± 125	max.	Volts

Flood Gun

Voltages are with respect to Reference Input

View Screen Voltage	11000	max.	Volts
Grid 6 (Suppressor Electrode) Voltage	300	max.	Volts
Grid 5 (Backing Electrode) Voltage	35	max.	Volts
Positive Input Voltage	300	max.	Volts
Negative Input Voltage Range	0 to –150	max.	Volts
Peak Heater to Cathode Voltage	± 125	max.	Volts

Limiting Circuit Values

View Screen Series Current-Limiting Resistance	1.0	min.	Megohm
Suppressor Electrode Circuit Resistance	0.1	max.	Megohm
Grid 1 Circuit Resistance	1.0	max.	Megohm
Deflecting Electrode Circuit Resistance (Note 2)	0.05	max.	Megohm

May 1967
Supersedes WX-31016 dated March 1967
S6-3A-11C, S5-10D, WI-1000

Westinghouse

Typical Operating Conditions & Characteristics

Caution: Damage to the tube may occur if the Write-Gun beam is turned on before the Flood-Gun beam current has reached normal operating value, or if the Flood-Gun beam is turned off before the Write-Gun beam. Apply Suppressor voltage before View Screen voltage.

Voltages are with respect to Reference Input

Write Guns

Grids 2 & 4 Voltage (Note 1)	90 to 110	Volts
Grid 3 (Focus) Voltage	−2000 to −2300	Volts
Grid 1 Voltage	−2400 to −2470	Volts
Cathode Voltage	−2400	Volts
Grids 2 & 4 Current (Max.)	1.75	mA
Grid 3 (Focus) Current (Per Gun)	−10 to +5	μA
Cathode Current (Max.)	2.0	mA
Deflection Factors: (Note 3)		
Deflection Electrodes 1 & 2	82 to 100	Vdc/In
Deflection Electrodes 3 & 4	82 to 100	Vdc/In
Focused Beam Position (Note 4)	.15	mm

Flood Gun

View Screen Voltage	10000	Volts
Grid 6 (Suppressor Electrode) Voltage:		
Operating Voltage	75	Volts
Cutoff Voltage	−3	Volts
Grid 5 (Backing Electrode) Voltage	15	Volts
Positive Input Voltage	265	Volts
Negative Input Voltage	−80	Volts
Reference Input Voltage	Equipment Ground	
View Screen Current	400	μA
Grid 6 (Suppressor Electrode) Current	150	μA
Grid 5 (Backing Electrode) Current	2	μA
Positive Input Current	3	mA
Reference Input Current	3.5	mA

Notes

1. Adjust for astigmatism control.
2. Approximately equal resistances should be used in each deflection electrode circuit.
3. For other values of accelerator voltage, the deflection factor is 38 ± 10% Vdc/In/kV of Grids 2 & 4 to Write Gun cathode voltage.
4. With all deflection electrodes tied to Grids 2 & 4 and erasure at a convenient value, the undeflected, focused spots will lie within a circle of 15 mm radius, centered on the tube faceplate.

Performance Data

See Section on Methods of Measuring Tube Performance

Viewing Time	15	Seconds
Erasing Time (Flood Gun Erasure)	7	Milliseconds
Gamma (at TV Sweep Rates)	2 ± 0.5	–
Writing Speed	7×10^4	Inches/Second
Half Tones	7	–
Brightness (Sweep Speed: 3.6×10^4 "/s)	1800	Foot-Lamberts
Contrast Ratio (High Contrast Mode)	40:1	–
Resolution (Shrinking Raster)	70	Lines/Inch
Resolution (TV Raster)	350	TV Lines

Methods of Measuring Tube Performance

Viewing Time

Viewing duration is the time during which the visual output of a storage tube increases from exactly visual extinction to 10% of saturated brightness without the application of a writing signal or erase pulses. The tube shall be primed and then erased to exactly visual extinction. The erase pulses are removed and the screen allowed to increase in brightness. The time interval required for the brightness level at the center of the screen to increase to 10% of saturated brightness is the viewing duration.

Erasing Time

The storage surface is primed. Erasure is produced by a single positive rectangular pulse applied to the backing electrode. The amplitude of this pulse is set to one volt above backing electrode cutoff and the pulse width necessary to erase from saturated brightness to visual cutoff is the erasing time.

Gamma

Sweeping at EIA rates (15750 Hz H by 60 Hz V, interlaced 2:1) a 3.6 inch H by 2.7 inch V display is displayed. Writing gun control grid bias is adjusted to just achieve visual raster cutoff. Positive, rectangular erase pulses and synchronous negative suppressor pulses are applied during the H and V blanking intervals. A positive-going seven step staircase synchronous with the line sweep is applied to the writing gun control grid. The brightness of each step is measured by means of a spot photometer while step amplitude is measured at the writing gun control grid with an oscilloscope. The slope of the log-log plot of brightness vs. grid voltage is gamma.

Writing Speed

A raster is applied having frequencies and trace length necessary to produce a scanning speed of 7×10^4 inches per second. The focus electrode is adjusted for best focus at the center of the raster. The tube is erased to cutoff and a single raster is written by applying a rectangular pulse of adjustable amplitude to Grid 1 of the writing gun.

The last step is repeated moving the lines of the raster progressively closer together until the individual lines in the written raster cannot be discerned visually. As the lines approach the merging condition, the control grid pulse amplitude is adjusted to give a written raster of 800 foot-lamberts.

Display Storage Tube

Two Writing Guns
High Contrast

Type WX-31016 ▲
4" Display Diameter
Electrostatic Focus & Deflection
1800 Foot-Lamberts Display Brightness
70 Lines/Inch Resolution

Contrast Ratio
A trace is written to saturation brightness, under high contrast conditions, while continuously writing and erasing. Use positive rectangular erase pulses variable from 2 to 12 volts peak-to-peak and a convenient duty cycle. The ratio of brightnesses in the written and unwritten areas is defined as the contrast ratio. This measurement is made with a maximum ambient brightness of 5 foot-lamberts.

Resolution, Shrinking Raster
A 60 Hz sawtooth voltage is applied between deflecting electrodes D_3D_4 and a 2100 to 6300 Hz sawtooth voltage is applied between deflecting electrodes D_1 and D_2 giving a raster of approximately 40 lines. Blanking is used to eliminate trace return lines. Trace length shall be adjusted to 3.5 inches. Raster is expanded and number of lines determined. Focus electrode is adjusted for best focus at the center of the raster. Display is erased to cutoff and grid 1, writing gun, is pulsed to write a single raster. Last step is repeated moving the lines progressively closer together until the individual lines in the written raster cannot be discerned visually. As the lines approach the merging condition, the grid pulse amplitude shall be adjusted to give brightness of 1000 foot lamberts. When the specified brightness is achieved and the lines cannot be discerned visually, the resolution measured at this condition is the limiting resolution.

The resolution in lines per inch is the number of horizontal lines counted when the raster was expanded divided by the height of the compressed raster.

Resolution, Television
Sweeping at EIA rates (15750 Hz H by 60 Hz V, interlaced 2:1) a 3.6 inch H by 2.7 inch V raster is displayed. Writing gun control grid bias is adjusted to just achieve visual raster cutoff. Positive, rectangular erase pulses and synchronous negative suppressor pulses are applied during the H and V blanking intervals. A pulse generator triggered by the line synchronous applies a burst of pulses at a 1.0 MHz rate to the writing gun control grid. Pulse amplitude is adjusted to provide a peak line brightness of 800 foot Lamberts. The ratio of this brightness to the brightness between adjacent lines is the relative output response at that frequency. At the sweep rates specified above and at this modulating frequency of 1.0 MHz the corresponding resolution by commercial standards is 80 TV lines per raster height. The generator frequency is increased in convenient steps up to 6.0 MHz and the line and space brightness (relative response) measured at each step. Pulse amplitude is kept constant at the value which produces 800 foot Lamberts at 1.0 MHz. The relative brightness response thus obtained at each modulating frequency is plotted against the modulating frequency (or against the equivalent TV resolution of 80 TV lines/raster height per megahertz).

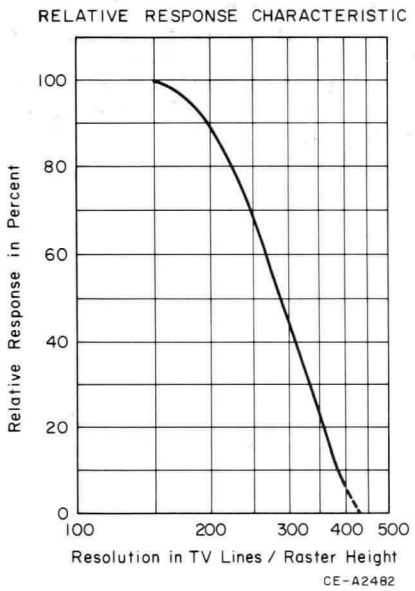

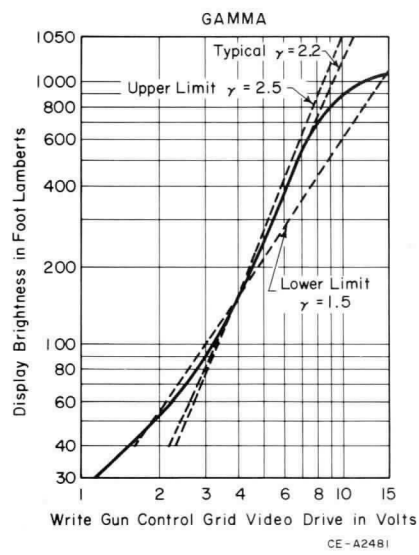

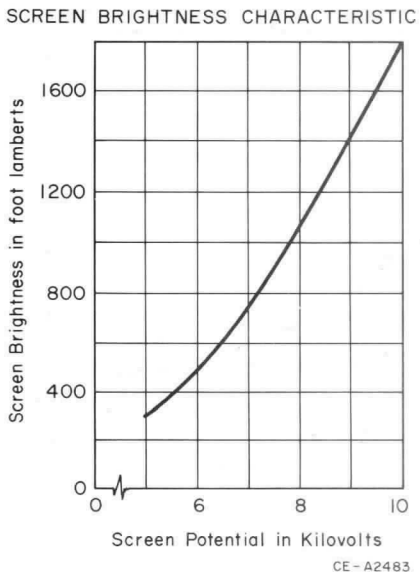

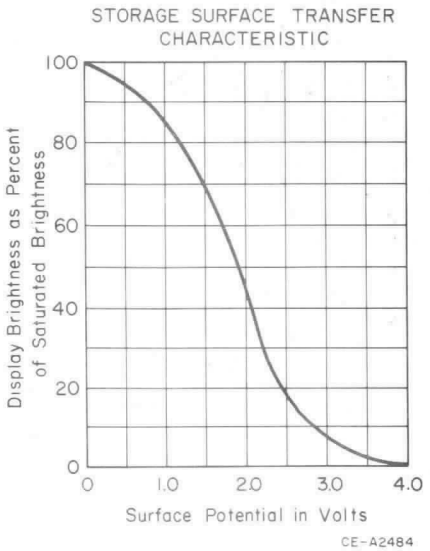

Westinghouse

DISPLAY PERSISTENCE

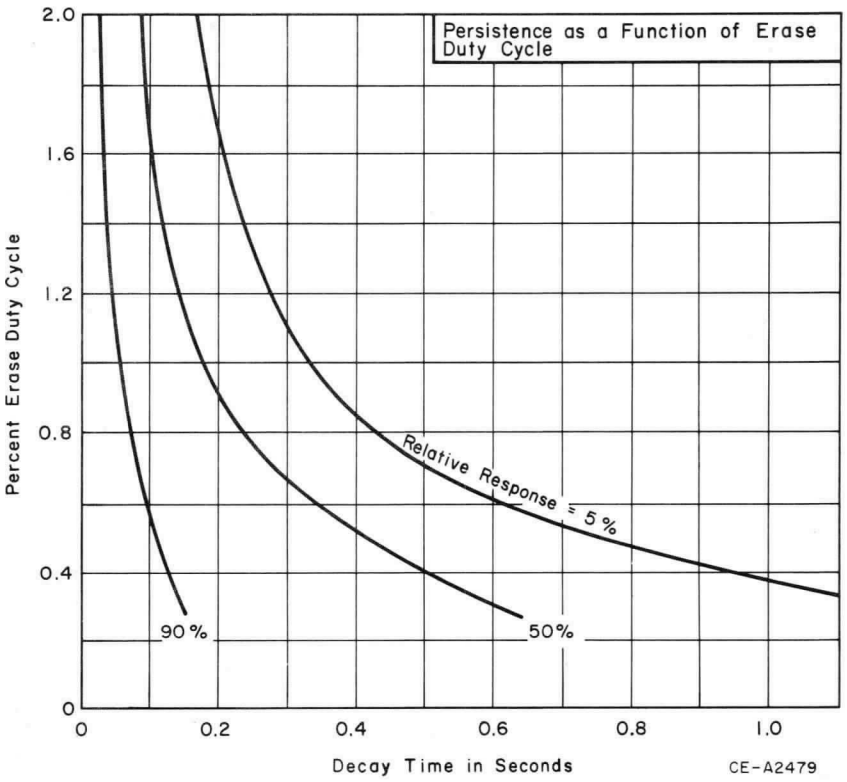

Persistence

Persistence is measured by writing a small display area to saturation brightness and measuring the decay characteristic on an oscilloscope with a fast response, eye-corrected spot photometer. For this measurement the erase format consists of a train of rectangular positive pulses of 6 volts amplitude; the suppressor train of rectangular negative pulses of 80 volts amplitude and synchronous with the erase train. The back-inc electrode and suppressor grid bias levels are 15 and 75 volts respectively. Persistences for duty cycles from 0.3 to 2.0 percent are shown. The decay time of images written to only 50 percent of saturated brightness is approximately 60 percent of that shown for saturated displays.

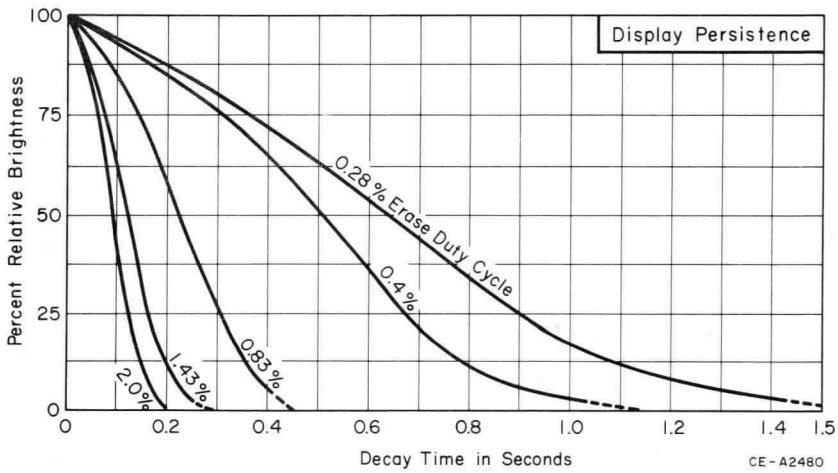

Display Storage Tube

Two Writing Guns
High Contrast

Type WX-31016 ▲
4" Display Diameter
Electrostatic Focus & Deflection
1800 Foot-Lamberts Display Brightness
70 Lines/Inch Resolution

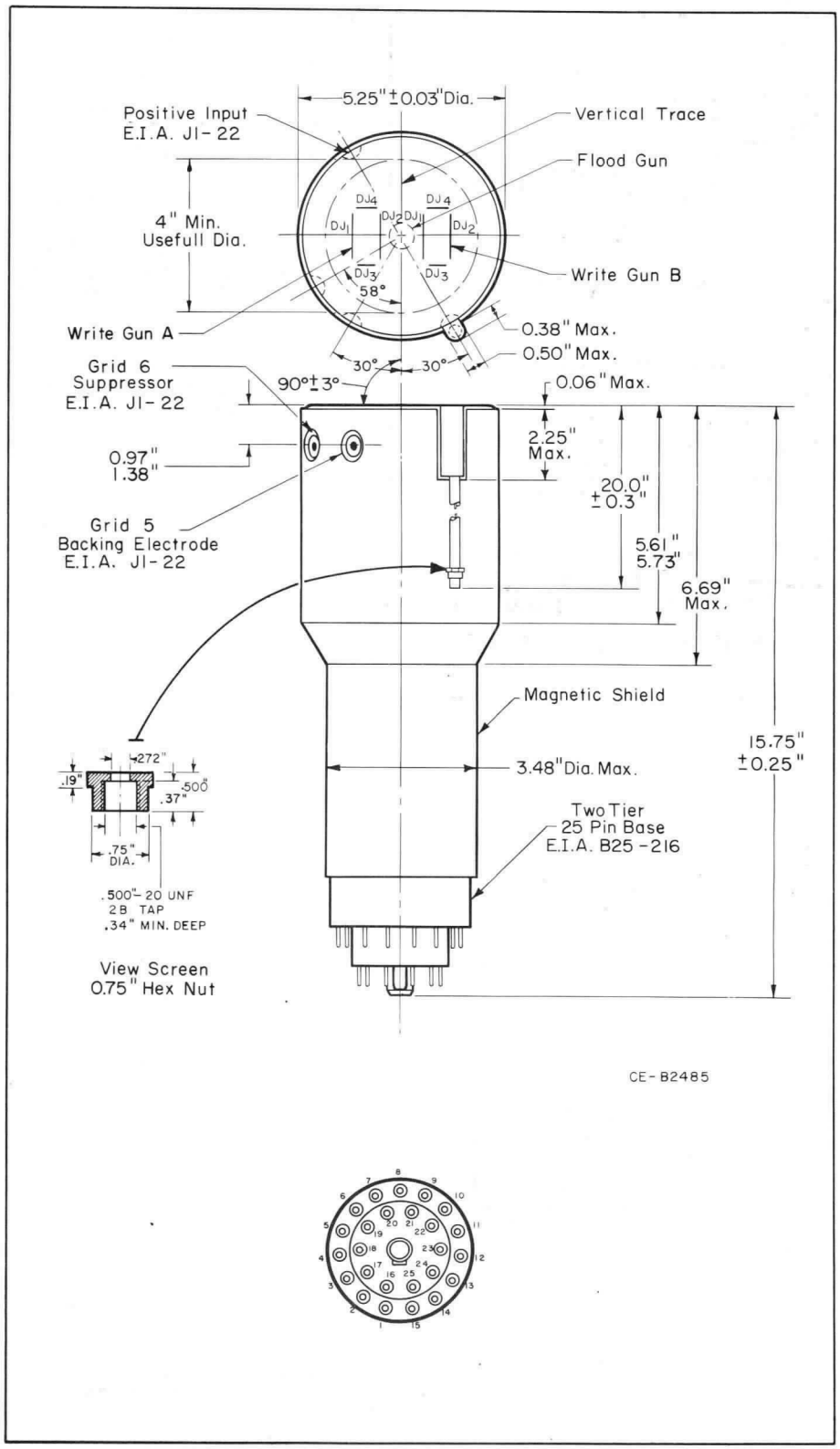

Display Storage Tube

Two Writing Guns
High Contrast

Type WX-31016 ▲
4" Display Diameter
Electrostatic Focus & Deflection
1800 Foot-Lamberts Display Brightness
70 Lines/Inch Resolution

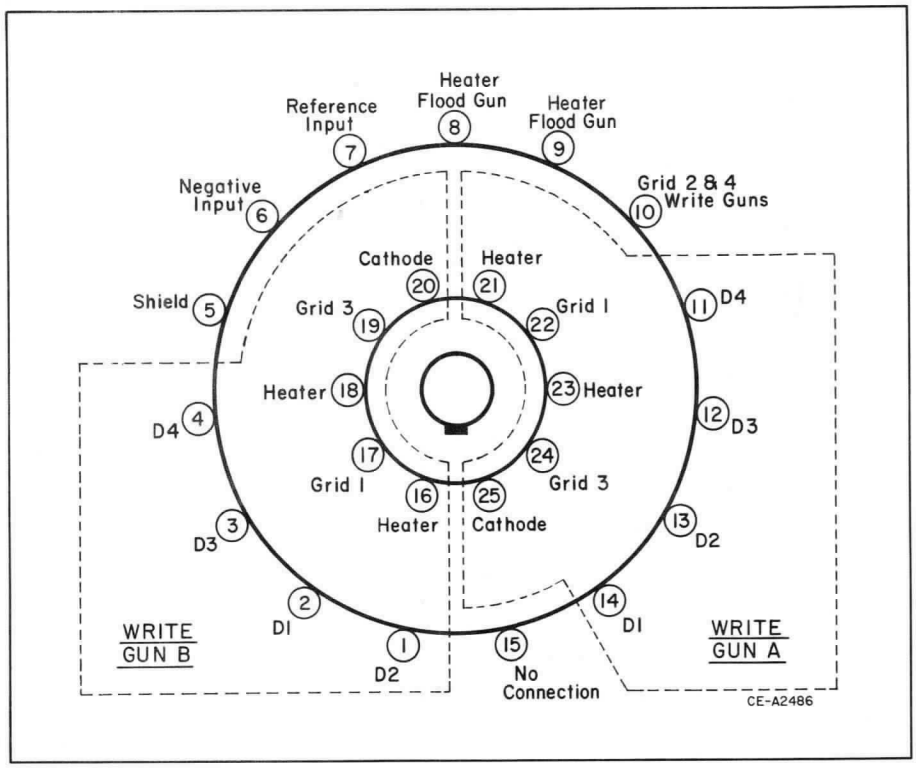

▲ The WX- number identifies a specific laboratory design; the design and, consequently, the data and type number are subject to change. No obligations are assumed to manufacture this particular device in the future unless otherwise arranged. These drawings and specifications are the property of Westinghouse Electric Corporation, Electronic Tube Division, and shall not be reproduced or copied or used as the basis for the manufacture or sale of apparatus and/or devices without permission.

Westinghouse Electric Corporation
Electronic Tube Division, Elmira, N.Y. 14902
Printed in U.S.A.

Westinghouse

WX-31486 ★

PROXICON Camera Tube

Proximity Focused Image Section
1″ Image Diagonal
1.2″ Diameter, All Magnetic Gun

Designed for Color Broadcasting

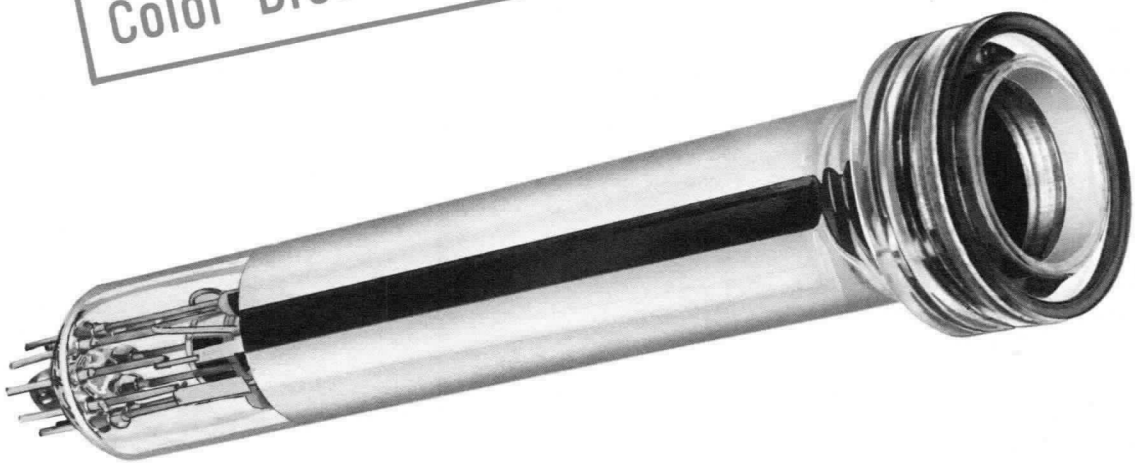

General Description

The WX-31486 or PROXICON Camera tube is a small SEC camera tube specifically designed for color broadcasting applications. The tube is highly sensitive, permitting operation at reduced lighting levels as well as with normal studio levels of illumination, has high resolution and low lag or persistence and is easy to operate.

The plane parallel geometry required for proximity focusing provides the tube with excellent signal and resolution uniformity and insures the complete absence of image distortion. The tube is provided with an improved burn-resistant SEC target which has the high gain and low lag characteristics of the standard SEC target and in addition provides a measure of protection against the damage and burn that may be caused by exposure to excessive illumination levels. The PROXICON Camera tube is able to operate over a wide range of scene illuminations and exhibits excellent sensitivity with moving as well as with stationary scenes.

The broad spectral response of the S-20 type photocathode simplifies the problem of achieving accurate color rendition. Optical and focus and deflection requirements are similar to those for a standard lead oxide vidicon and suitable components are available commercially.[1]

Principles of Operation

The construction of the PROXICON Camera tube is schematically illustrated in Figure 1. It consists of a proximity-focused image section,

- **Designed for Color Broadcasting Applications**
- **Normal Studio or Low Light Level Operation**
- **Low Lag**
- **Proximity Focusing**
- **Simple Operation, Rugged Compact Design**
- **Broad S-20 Spectral Response**

SCHEMATIC DRAWING OF TUBE

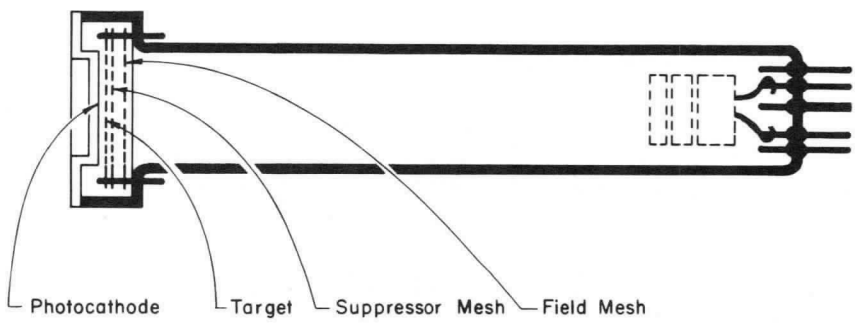

FIGURE 1

October 1970
New Information
TC–2237-2

Westinghouse

a mesh-supported Secondary Electron Conduction (SEC) target and a magnetically focused and deflected reading section. The sensor is an S-20 photocathode deposited on the inner surface of the plano-plano glass faceplate.

When an optical image is focused onto the photocathode, electrons are emitted from the illuminated areas of the image in direct proportion to the amount of incident radiation and are then accelerated across the proximity focusing spacing towards the SEC target, focus being maintained by the electric field existing between the photocathode and the target.

The target consists of a fine mesh supporting a thin film of aluminum and a highly porous layer of potassium chloride. By applying a positive potential to the aluminum signal plate and stabilizing the potential of the KCl surface at gun cathode potential (by scanning the potassium chloride surface with a low velocity electron beam), an electric field can be established across the potassium chloride layer. Photoelectrons arriving at the target with energies of typically 4 keV penetrate the aluminum layer and create secondary electrons within the potassium chloride. Under the influence of the electric field established across the layer, the secondary electrons migrate toward the signal plate creating a positive charge pattern which in spatial distribution and in intensity corresponds to the optical image focused onto the tube faceplate. Because of the high resistivity of the low density target, the charge pattern can be stored for long periods of time. The charging of the layer is periodically interrupted by the scanning beam which returns the potassium chloride to gun cathode potential by depositing electrons on the positively charged areas. These current pulses, which constitute the video signal, are capacitively coupled to the signal plate. The current flowing in the signal plate is used to develop a voltage across a load resistor. After amplification, this voltage produces a video picture on a television monitor in the usual manner.

The low velocity electron beam which scans the target is produced by an electron gun consisting of an indirectly heated thermionic cathode, a control grid, G1, and an accelerating grid, G2. The beam is focused at the surface of the target by the combined action of the uniform magnetic field of an external coil and the electrostatic field of the G3 electrode. A field mesh, G4, serves to provide a uniform decelerating electrostatic field to the target. A second mesh electrode, G5 (suppressor mesh), is positioned close to the target surface, the purpose of which is to control the maximum exit surface potential of the SEC target. The suppressor mesh is normally operated at a potential just below the target "crossover" potential, which for potassium chloride is approximately 15V. Alignment and deflection of the beam is accomplished by transverse magnetic coils.

Performance Data

General

Specific performance parameters are discussed in the paragraphs that follow. For parameters where the performance varies from tube to tube, both a minimum and a typical value are given. The performance of all tubes will equal or exceed the minimum values. Typical values are obtained by averaging given performance parameters over a large number of tubes. Thus any given tube will provide at least minimum performance for all parameters and may provide typical performance for one or more parameters.

Spectral Response and Sensitivity

The PROXICON camera tube employs an S-20 photosurface deposited on a plano-plano type glass faceplate. The typical photocathode response is 175μA/lm, minimum 120μA/lm. Figure 2 shows a typical response for this faceplate photocathode combination. The high quantum efficiency of the S-20 photocathode and the gain of the SEC target provide typical and minimum sensitivities of 25μA/fc and 10 μA/fc respectively at the faceplate illumination of 10^{-3} fc (see Figure). Since the optional image size is .6" x .8", these figures correspond to typical and minimum overall sensitivities of 7500μA/lm and 3000μA/lm respectively.

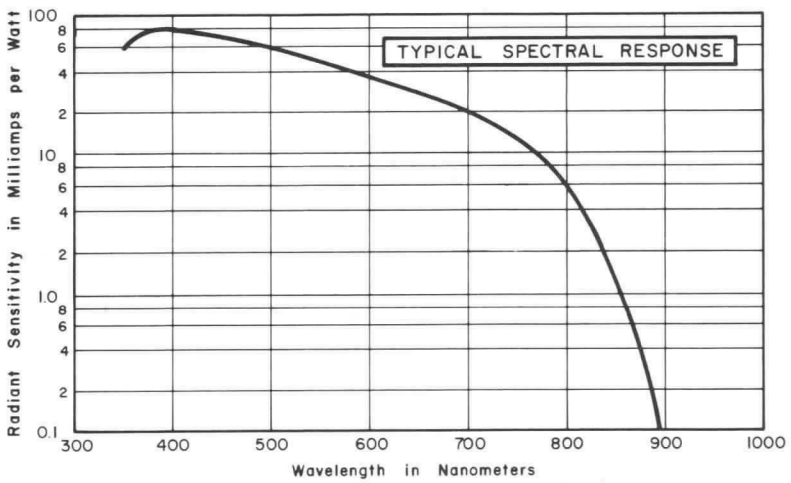

FIGURE 2

WX-31486

PROXICON Camera Tube

Proximity Focused Image Section
1″ Image Diagonal
1.2″ Diameter, All Magnetic Gun

General Data

Faceplate	7056 Glass
Refractive Index	1.5
Useful diagonal (Aspect ratio 3:4)	1.0 Inch 25 mm
Photocathode	S-20 (Figure 2)
Image Section:	
Focusing Method	Electrostatic
Configuration	Proximity
Target Shunt Capacity:	
Typical	35 pF
Maximum	40 pF
Reading Section:	
Focusing Method	Magnetic
Alignment Method	Magnetic
Deflection Method	Magnetic
Focus and Deflection Coil Assembly	See Note 1
Cathode	Indirectly Heated
Heater Power	1 Watt
Socket	Amperex Type 56021 or equivalent
Maximum Overall Length	8.15 Inches
Maximum Diameter	1.85 Inches
Diameter of Reading Gun Bulb	1.18 Inches
Weight	3.6 Ounces
Operating Position	Any

Operational Data

Image Size at the Faceplate: .8″ x .6″

	Maximum Rating	Typical Operation	Units
Photocathode Illumination		See Figure 3	
Photocathode Voltage	−4.5	−4	Kilovolts
Target Voltage (Note 2)	40	10 - 20	Volts
Grid 5, Suppressor Mesh, Voltage (Note 3)	40	15	Volts
Grid 4, Field Mesh, Voltage (Note 4)	600	550	Volts
Grid 3, Focus Electrode Voltage	600	480	Volts
Grid 2, Accelerator, Voltage	350	300	Volts
Grid 1, Voltage	−150 +0	−40	Volts
Heater Voltage	6.9	6.3	Volts
Peak Heater to Cathode Voltage:			
Heater Negative	125	NA*	Volts
Heater Positive	10	NA*	Volts
Minimum Peak-to-Peak Blanking Voltage Applied to:			
Cathode (Positive Pulse)	NA*	30	Volts
Grid 1 (Negative Pulse)	NA*	80	Volts
Cathode Voltage	NA*	Ground	—
Magnetic Focusing Field (Center of Coil)	NA*	40	Gausses
Magnetic Alignment Field	NA*	0 - 4	Gausses
Peak Deflection Current for Specified Yoke:			
Horizontal	NA*	300	mA
Vertical	NA*	32	mA
Peak Signal Current	1000	NA*	nA

* Not Applicable

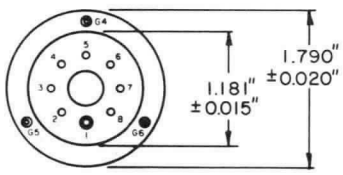

Base View

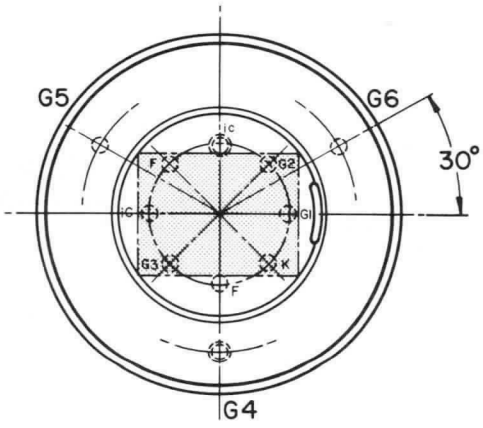

Face View

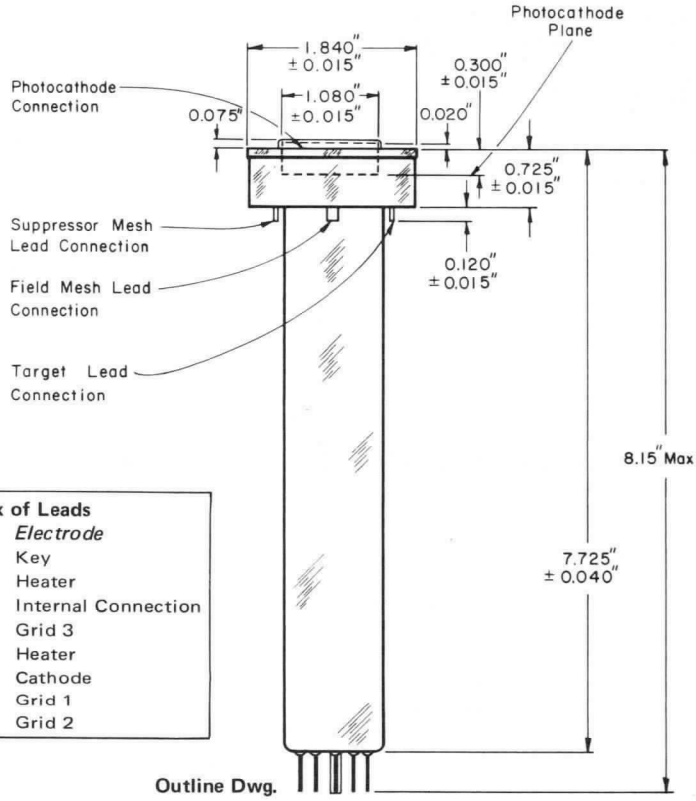

Outline Dwg.

Index of Leads

Pin	*Electrode*
1	Key
2	Heater
3	Internal Connection
4	Grid 3
5	Heater
6	Cathode
7	Grid 1
8	Grid 2

WX-31486

PROXICON Camera Tube

Proximity Focused Image Section
1" Image Diagonal
1.2" Diameter, All Magnetic Gu

Geometrical Distortion

Geometrical distortion is typically less than 1% as measured with an EIA Linearity Chart in accordance with IEEE Standard No. 202 and using the recommended yoke assembly.

Operating and Handling Considerations

1. The tube is supplied with a shoulder socket the purpose of which is to protect the shoulder pins from damage during shipping and also to protect the target, by electrically shorting the target to the suppressor mesh, from permanent damage which could be caused by the accidental application of a high voltage (e.g. from an electrostatically charged human operator). This socket should be attached to the tube at all times when the tube is not inserted in the camera head.
2. The target and suppressor mesh voltages recommended with each tube should not be exceeded.
3. The horizontal and vertical deflection power should be adjusted to ensure that the target is either normally scanned or overscanned before the reading beam is turned on. Avoid underscanning.

Set-Up Procedure

As long as the above precautions are taken, the tubes can be set up and operated in a manner similar to that of a vidicon. No special "warm up" time is required. The sequence given below is recommended as a convenient set-up procedure.

1. Install the tube in the camera head and make connections to all electrodes and apply deflection voltages sufficient to overscan the target.
2. Switch on all other voltages and center and focus a test pattern on the faceplate of the tube so that the image size is 0.8" x 0.6". The illumination level should be adjusted to about 5×10^{-3} fc.
3. Decrease the deflection power until the test chart completely fills the picture and then adjust the G3 beam focus control and optical focus alternately until no further improvement in picture quality is obtained. The G4 voltage should always be maintained above that of G3 to prevent positive ions generated in the G3 drift space from landing on the target.

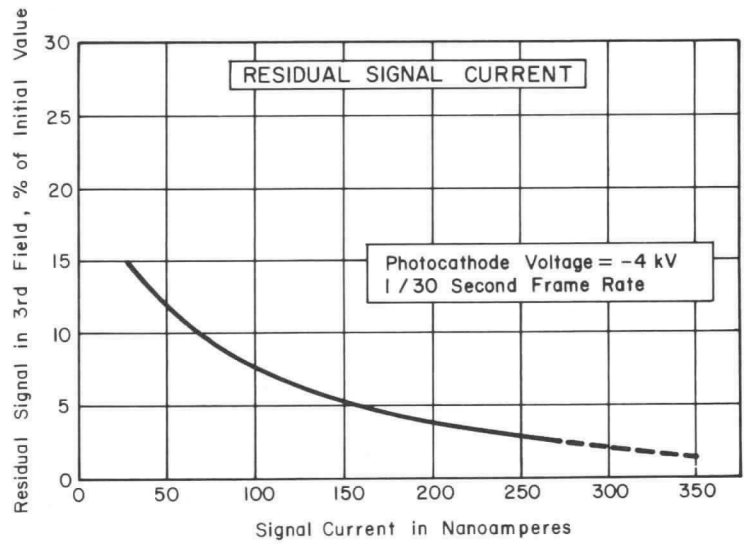

FIGURE 6

4. Adjust alignment currents for best beam landing in the following manner:
   Reduce the G5 voltage to a value just above the threshold for beam landing. Adjust the alignment current to center and maximize the area over which the beam can land and then return the G5 voltage to the recommended value, check G3, and optical focus.

Shut-down Procedure

The only important feature of the shut-do procedure is that the deflection power should be switched off only after the reading beam has been switched off. The recommended sequence is:

1. Turn off all voltages except the deflection supplies.
2. Turn off deflection power.

Notes

1. A complete yoke assembly and preamplifier specifically developed for the PROXICON camera tube may be obtained from the Westinghouse ETD. See last page for mailing information.
2. The recommended target voltage is printed on a data card which accompanies each tube.
3. The function of the G5 electrode is to control the potential to which the target surface can rise. If the potential of the G5 electrode is set at a value higher than that of the crossover potential for KCl (approximately 15 volts) and if, because of a very bright exposure the target surface potential does rise above the crossover, then reading beam electrons will land on the target with sufficient energy to cause a net flow of electrons away from the target until the potential stabilizes at that of G5. The target will then fail to discharge and will produce a black area on the monitor. In order to discharge the target and resume normal operation, the G5 potential should be temporarily reduced to about 10 volts.
4. It is recommended that the potential of the G4 electrode be maintained above the potential of G3.

Light Transfer Characteristics

The light transfer characteristic of the WX-31486 is shown in Figure 3. The gamma varies from approximately one at low light levels to about .7 at light levels of about 2×10^{-2} fc where the tube will provide a typical signal current of 250 nA (minimum 200 nA). At higher light levels the target saturates at a surface voltage essentially equal to that of the suppressor mesh (G5). Under these conditions the tube will provide a highlight signal current of at least 300 nA. The transfer function of Figure 3 applies for a standard 1/30th second frame rate, 525 line interlaced scan with the photocathode and the target voltages adjusted to their recommended values.

Dark Current

Dark current is negligible in the PROXICON camera tube and is always less than 1 nA.

Resolution

Figure 4 shows the typical uncompensated square wave amplitude response for the PROXICON camera tube. The minimum amplitude response at resolutions of 200 & 400 TV lines per picture height are 65% and 30% respectively. Typical and minimum limiting resolutions are 750 and 650 TV lines per picture height respectively. These figures apply to the picture center, however, essentially the same performance can be obtained over the entire scanned area by the application of dynamic focusing to the G3 electrode with a waveform of approximately 7 V in amplitude.

Lag Characteristics

Figure 5 shows the lag characteristics for a typical tube operating at the recommended target and photocathode voltages and at a signal current of 200 nA. In the first two fields more than 90% of the signal is readout leaving less than 8% and typically 4% to be readout in the third field. In the fifth and succeeding fields, the residual signal is imperceptible. The dependence of lag on signal current is shown in Figure 6. At lower light levels the lag increases primarily because of the poorer beam acceptance associated with the lower voltage excursions at the target surface.

Signal Uniformity

The video signal uniformity defined as the percentage deviation from the maximum signal level is typically 15% and is always less than 25%. It is measured across a horizontal line at the center of the scanned raster and while the tube is operating in the recommended yoke assembly.[1]

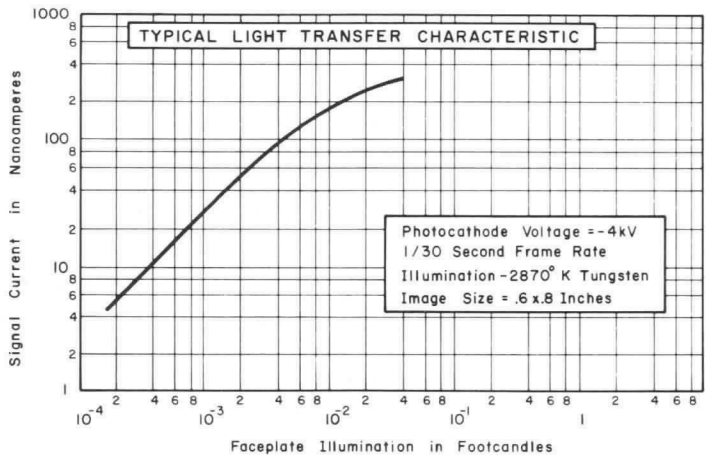

FIGURE 3

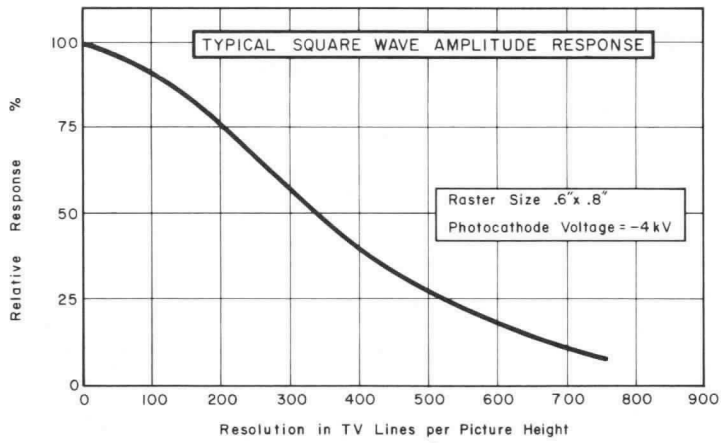

FIGURE 4

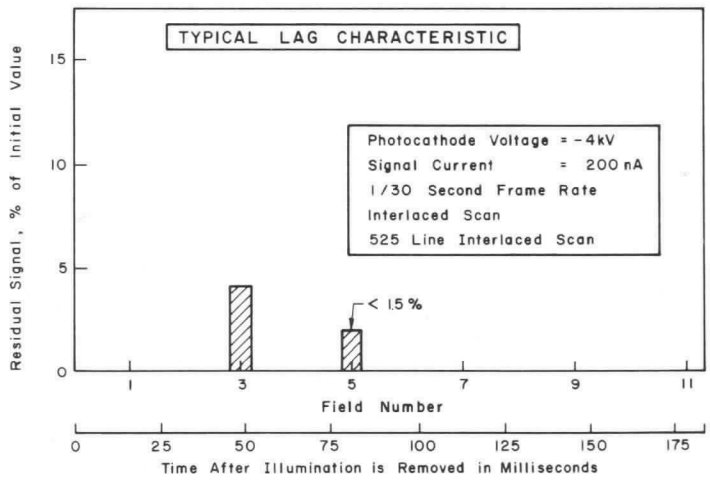

FIGURE 5

WX-31486

PROXICON Camera Tube

Proximity Focused Image Section
1″ Image Diagonal
1.2″ Diameter, All Magnetic Gun

For more information write or telephone the Image Tube Product Sales Manager, Westinghouse Electronic Tube Division, Post Office Box 284, Elmira, New York 14902. Telephone Area Code 607-739-7951.



★ The WX-number identifies a specific laboratory design; the design and, consequently, the data and type number are subject to change. No obligations are assumed to manufacture this particular device in the future unless otherwise arranged. These drawings and specifications are the property of Westinghouse Electric Corporation, Electronic Tube Division, and shall not be reproduced or copied or used as the basis for the manufacture or sale of apparatus and/or devices without permission.

Westinghouse Electric Corporation
Electronic Tube Division, Elmira, N. Y. 14902
Printed in U.S.A.

Westinghouse

WL-31792

EBS Camera Tube

Silicon Diode Array Target
All Magnetic Gun
Electrostatic Image Section
25 mm Image Diagonal

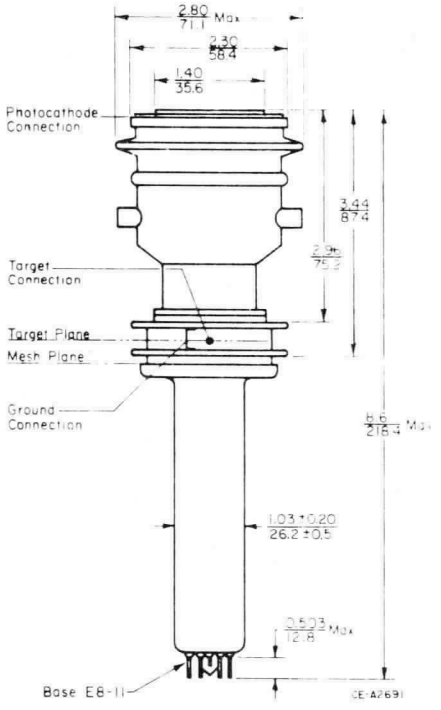

(Dimensions in inches/mm unless otherwise shown. The millimeter dimensions are derived from the original inch dimensions. 1" = 25.4 exactly.)

Pin Index

1 Heater	6 Grid 3
2 Grid 1	7 Cathode
3 Grid 4	8 Heater
4 IC(not used)	9 Index(short) Pin
5 Grid 2	IC (not used)

Pins numbered in clock wise manner when viewed from reading section end of tube.

General Data

Faceplate . . . . . Fiber Optic
Numerical Aperture 1.1
Useful Diameter . . . . . 25mm(1.0")
Photocathode . . . . . S-20 (Figure 2)
Image Section:
Focusing Method . . . . . Electrostatic
Configuration . . . . . Diode
Target Shunt Capacity . . . . . 15 pF typ.
Reading Section:
Focusing Method . . . . . Magnetic
Deflection Method . . . . . Magnetic
Deflection Yoke—Focusing Coil, Alignment Coil Assembly . . . . Penn-Tran No. 1486-1 (Note 5) or Cleveland Electronics No. SVDA-761 (Note 6) or equivalent
Cathode . . . . . Indirectly Heated
Heater Power . . . . . 1 Watt
Base . . . . . JEDEC No. E8-11
Socket . . . . . Cinch Mfg. Co. No. 54A18088
Weight . . . . . 0.6 Pounds 0.27 kg
Operating Position . . . . . Any

- **Very High Static & Dynamic Sensitivity**
- **Burn Resistant**
- **Wide Dynamic Range**
- **Low Power Consumption**
- **Simple Operation**
- **Rugged, Compact Design**
- **Compatible with WL-30691 SEC Tube Cameras**

General Description

The WL-31792 is a compact 25mm Electron Bombarded Silicon (EBS) camera tube designed for televising low contrast scenes at very low illumination levels. The tube employs a silicon diode array target operated in the electron bombarded mode. The high electron gain of this target provides the tube with an outstandingly high sensitivity for moving as well as for stationary images. Even greater sensitivity may be obtained by fiber optically coupling a single stage image intensifier such as the Westinghouse WL-30677. Coupled and potted intensifier-EBS camera tube packages are available from the Westinghouse Electronic Tube Division.

The electrostatic image section of the tube remains in focus for all photocathode voltages and since the sensitivity of the tube varies with photocathode voltage, this feature provides a convenient means for gain control. Scan power and voltage considerations for the reading gun are similar to those for a standard 1" all magnetic vidicon. Suitable deflection yokes and focus coils are commercially available.

The WL-31792 is similar to the WL-30691 SEC camera tube and for systems employing the SEC tube type the WL-31792 offers the opportunity of obtaining a significant improvement in performance at minimum system change.

Operational Data

Image Size at the Faceplate: 0.6" x 0.8"
TV scanning rate 525 lines, interlaced 2:1 frame time 1/30 second.
Direction of Scan: Parallel to a Line Joining Axis of Tube to Target Lead.

	Maximum Rating	Typical Operation	Units
Photocathode Voltage	−12.5	−10	Kilovolts
Anode Voltage	NA*	Ground	—
Target Voltage	20	15	Volts
Grid 4, Field Mesh, Voltage	500	400	Volts
Grid 3, Focus Electrode Voltage	500	380	Volts
Grid 2, Accelerator, Voltage	350	300	Volts
Grid 1, Voltage	−150, +0	−20	Volts
Heater Voltage	6.9	6.3	Volts
Peak Heater to Cathode Voltage:			
Heater Negative	125	NA*	Volts
Heater Positive	10	NA*	Volts
Minimum Peak-to-Peak Blanking Voltage Applied To:			
Cathode (Positive Pulse)	NA*	30	Volts
Grid 1 (Negative Pulse)	NA*	80	Volts
Cathode Voltage	NA*	Ground	—
Magnetic Focusing Field (Center of Coil)	NA*	40	Gauss
Magnetic Alignment Field	NA*	0 to 8	Gauss
Peak Deflection Current for Specified Yoke:			
Horizontal (Cleveland Electronics Coil)	NA*	115	mA
Vertical (Cleveland Electronics Coil)	NA*	16	mA
Horizontal (Penn Tran Coil)	NA*	270	mA
Vertical (Penn Tran Coil)	NA*	25	mA

*Not Applicable

January 1972
Supersedes TD 86-807 dated July 1970
TC-2237-2

WL-31792

EBS Camera Tube

Silicon Diode Array Target
All Magnetic Gun
Electrostatic Image Section
25 mm Image Diagonal

Performance Data

Under Typical Operating Conditions

	Typ.	Class 1 Min.	Class 1 Max.	Class 2 Min.	Class 2 Max.	Units
Sensitivity (2870°K Radiation)	1050	700	—	600	—	μA/fc
Aperture Response at 600nA Signal: See Curve Below						
200 TVL	70	65	—	60	—	%
400 TVL	30	24	—	15	—	%
Dark Current at 25°C (Notes 1 & 2)	11	—	19	—	29	nA
Lag: Third Field (Notes 1 & 3)	9	—	12	—	15	%
Peak Video Signal Current Available	1000	700	—	600	—	nA
Signal Non Uniformity	20	—	30	—	35	%
Distortion (Note 4)	2	—	4	—	4	%

Notes

1. At recommended target voltage.
2. Instantaneous value of dark current at indicated temperature. If measured with DC meter, values would be at least 20% lower.
3. Measured in third field after the illumination is removed and expressed as a percentage of an initial signal current of 300nA.
4. Standard 54 IRE 23 SI
5. Made by Penn-Tran Inc., 1155 Zion Road, Bellefonte, Pa.
6. Made by Cleveland Electronics, Inc.,2000 Highland Road, Twinsburg, OH 44087.

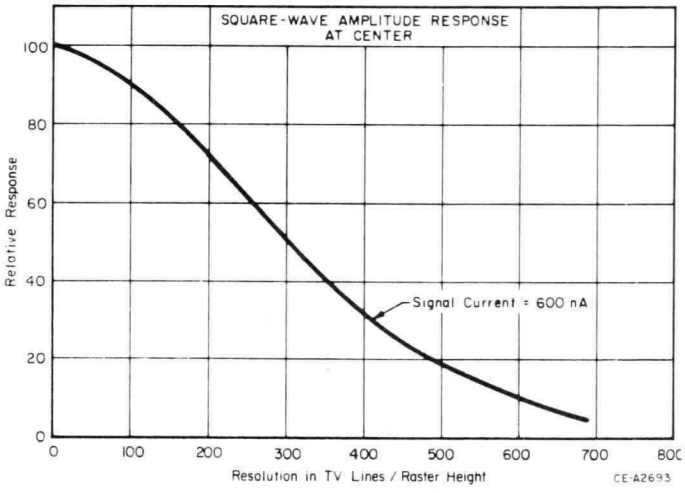

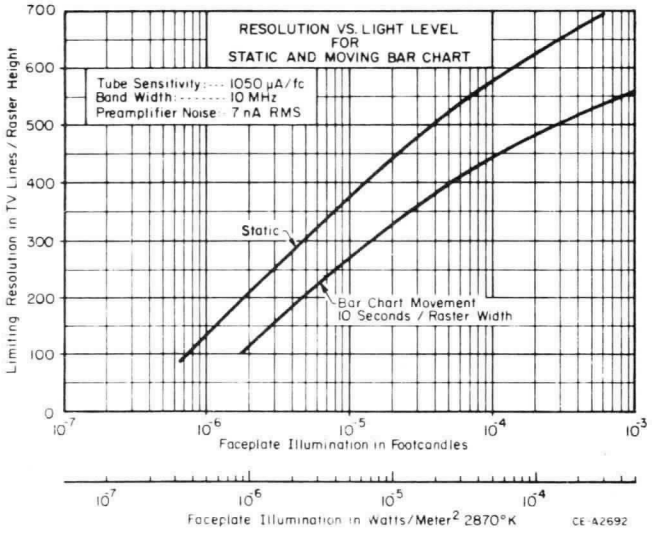

Picture Quality

The maximum number and distribution of small area blemishes within the PC voltage range of 10 to 3.5 kV and at 400 nA signal current are defined in the table below:

	MAXIMUM ALLOWED BLEMISHES					
	Class 1				Class 2 †	
	Zone 1	Zone 2	Zone 3	Total Raster	Zone 1	Total Raster
Blemishes with a major dimension of 9 TVL or more	0	0	0	0	0	0
Blemishes with a major dimension of 7 TVL or more	1	2	2	4	1	5
All blemishes (with a major dimension of 2 TVL or more)	3	7	7	15	6	20

Dark spots of 2 TVL or less and white spots of 1 TVL or less are not counted unless concentration causes a smudged appearance.

Zone 1 - A centrally located circle whose diameter is ½ the raster height (approx. 15% of the raster area).

Zone 2 - A centrally located circle whose diameter is the raster height but which excluses Zone 1 (approx. 45% of the raster area).

Zone 3 - The raster area outside Zone 2 (approx. 40% of the raster area).

† *Zone 2 and Zone 3 not specified for Class 2*

The information contained herein is supplied without assuming responsibility for infringement of patents or other rights of third parties which may result from its use. No license is granted by implication or otherwise under any patent or patent rights of Westinghouse Electric Corporation.

Westinghouse Electric Corporation
Electronic Tube Division, Elmira, N. Y. 14902 [607] 739 7951
Printed in U. S. A.

Westinghouse

WL-31793

EBS Camera Tube

Silicon Diode Array Target
All Magnetic Gun
Electrostatic Image Section
25mm Image Diagonal

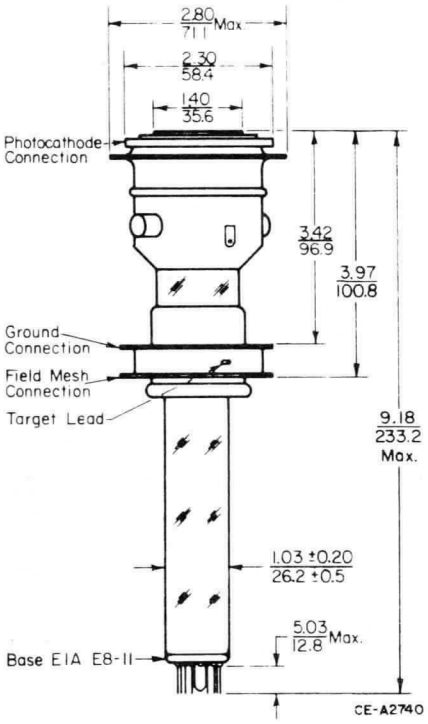

Dimensions are in inches / mm based on 1" = 25.4 mm

- **Very High Static & Dynamic Sensitivity**
- **Burn Resistant**
- **Wide Dynamic Range**
- **Rugged, Compact Design**
- **Low Power Consumption**
- **Simple Operation**
- **Compatible with WL-30893 SEC Tube Cameras**

General Description

The WL-31793 is a compact 25mm Electron Bombarded Silicon (EBS) camera tube designed for televising low contrast scenes at very low illumination levels. The tube employs a silicon diode array target operated in the electron bombarded mode. The high electron gain of this target provides the tube with an outstandingly high sensitivity for moving as well as for stationary images. Even greater sensitivity may be obtained by fiber optically coupling a single stage image intensifier such as the Westinghouse WL-30677. Coupled and potted intensifier-EBS camera tube packages are available from the Westinghouse Electronic Tube Division.

The WL-31793 is similar to the WL-30893 SEC camera tube and for systems employing the SEC tube type the WL-31793 offers the opportunity of obtaining a significant improvement in performance at minimum system change.

Pin Index

1	Heater	6	Grid 3
2	Grid 1	7	Cathode
3	No Connection	8	Heater
4	IC (not used)	9	Index (short) Pin
5	Grid 2		IC (not used)

Pins numbered in clockwise manner when viewed from reading section end of tube.

General Data

Faceplate . . . . . Fiber Optic
Numerical Aperture 1.1
Useful Diameter . . . . . 1.0"
Photocathode . . . . S-20(Figure 1,TD86-806)
Image Section:
Focusing Method . . . . . Electrostatic
Configuration . . . . . Diode
Target Shunt Capacity . . . . . 17 pF typ.
Reading Section:
Focussing Method . . . . . Magnetic
Deflection Method . . . . . Magnetic
Deflection Yoke-Focussing Coil, Alignment Coil Assembly . . . . . Penn-Tran No. 1486-1 or equivalent(note 5)
Cathode . . . . . Indirectly Heated
Heater Power . . . . . 1 Watt
Base . . . . . EIA E8-11
Socket . . . . . Cinch Mfg. No. 54A18088
Weight . . . . . 0.6 Pounds 0.27 kg
Operating Position . . . . . Any

Operational Data

Image Size at the Faceplate: 0.6" x 0.8"
TV Scanning rate 525 lines, interlaced 2:1 frame time 1/30 second.
Direction of scan: Parallel to a Line Joining Axis of Tube to Target Lead.

	Maximum Rating	Typical Operation	Units
Photocathode Voltage	−12.5	−10	Kilovolts
Anode Voltage	NA*	Ground	—
Target Voltage	20	15	Volts
Grid 4, Field Mesh, Voltage	500	400	Volts
Grid 3, Focus Electrode Voltage	500	380	Volts
Grid 2, Accelerator, Voltage	350	300	Volts
Grid 1, Voltage	−150 +0	−20	Volts
Heater Voltage	6.9	6.3	Volts
Peak Heater to Cathode Voltage:			
Heater Negative	125	NA*	Volts
Heater Positive	10	NA*	Volts
Minimum Peak-to-Peak Blanking Voltage Applied To:			
Cathode (Positive Pulse)	NA*	30	Volts
Grid 1 (Negative Pulse)	NA*	80	Volts
Cathode Voltage	NA*	Ground	—
Magnetic Focusing Field (Center of Coil)	NA*	40	Gauss
Magnetic Alignment Field	NA*	0 to 8	Gauss
Peak Deflection Current for Specified Yoke:			
Horizontal	NA*	270	mA
Vertical	NA*	25	mA

*Not Applicable

February 1972
Supersedes TD 86-807 dated July 1970
TC-2237-2

WL-31793

EBS Camera Tube

Silicon Diode Array Target
All Magnetic Gun
Electrostatic Image Section
25mm Image Diagonal

Performance Data

Under Typical Operating Conditions

	Typ.	Class 1 Min.	Class 1 Max.	Class 2 Min.	Class 2 Max.	Units
Sensitivity (2870° Radiation)	1050	700		600		μA/fc
Aperture Response at 600nA Signal						
200 TVL	85	80		75		%
400 TVL	45	35		30		%
Dark Current at 25° C (Notes 1 & 2)	17		30		45	nA
Lag: Third Field (Notes 1 & 3)	11		17		19	%
Peak Video Signal Current Available	1000	700		600		nA
Signal Nonuniformity	20		30		35	%
Distortion (Note 4)	2		4		4	%

Notes

1. At recommended target voltage.
2. Instantaneous value of dark current at indicated temperature. If measured with DC meter, values would be 23% lower.
3. Measured in third field after the illumination is removed and expressed as a percentage of an initial signal current of 300nA.
4. Standard 54 IRE 23 SI.
5. Penn-Tran Inc., 1155 Zion Road, Bellefonte, PA.

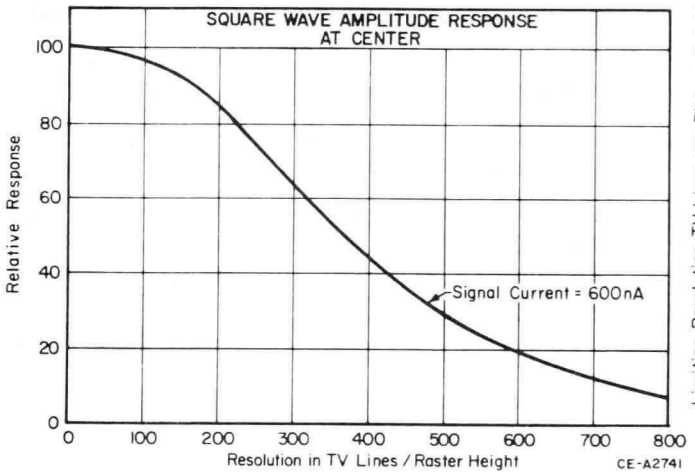

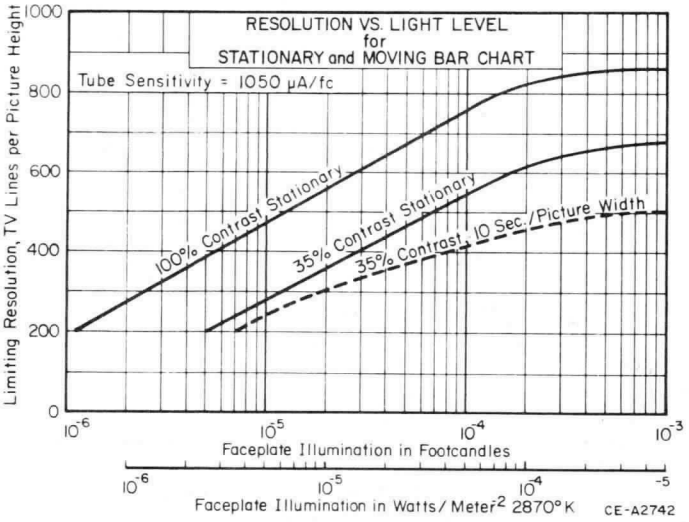

Picture Quality

The maximum number and distribution of small area blemishes within the PC voltage range of 10 to 3.5 kV and at 400 nA signal current are defined in the table below:

	MAXIMUM ALLOWED BLEMISHES					
	Class 1				Class 2	
	Zone 1	Zone 2	Zone 3	Total Raster	Zone 1	Total Raster
Blemishes with a major dimension of 9 TVL or more	0	0	0	0	0	0
Blemishes with a major dimension of 7 TVL or more	1	2	2	4	1	5
All blemishes (with a major dimension of 2 TVL or more)	3	7	7	15	6	20

Dark spots of 2 TVL or less and white spots of 1 TVL or less are not counted unless concentration causes a smudged appearance.

Zone 1- A centrally located circle whose diameter is ⅓ the raster height(approx. 15% of the raster area).

Zone 2- A centrally located circle whose diameter is the raster height but which excluses Zone 1 (approx. 45% of the raster area).

Zone 3- The raster area outside Zone 2 (approx. 40% of the raster area).

† Zone 2 and Zone 3 not specified for Class 2.

The information contained herein is supplied without assuming responsibility for infringement of patents or other rights of third parties which may result from its use. No license is granted by implecation or otherwise under any patent or patent rights of Westinghouse Electric Corporation.

Westinghouse Electric Corporation
Electronic Tube Division, Elmira, N.Y. 14902
Printed in U.S.A.

Westinghouse

WL-32000
Intensifier SEC Camera Tube

All Magnetic Gun
Electrostatic Image Sections
40 mm Image Diagonal

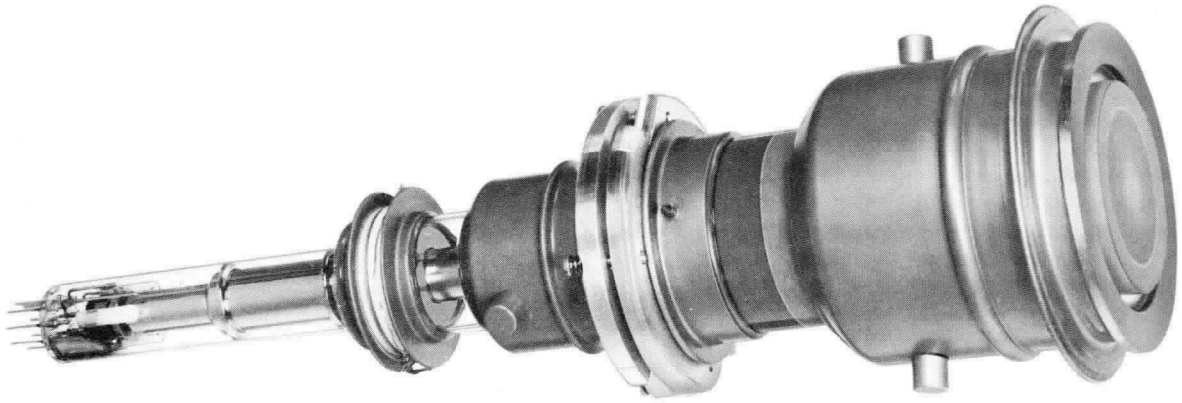

General Description

The Westinghouse WL-32000 is a television camera tube consisting of a WL-30677 electrostatically focused image intensifier fiber-optically coupled to a WL-30691 SEC camera tube. The WL-32000 has a 40mm diameter input photocathode and is characterized by extremely high sensitivity, good resolution, low lag or persistence and simplicity of operation.

The novel feature of the WL-32000 which distinguishes it and other SEC camera tubes from conventional camera tubes is the Secondary Electron Conduction (SEC) target[1]. This target has high gain, excellent storage properties and retains only a very small percentage of its stored signal after a single scan of the reading beam.

Because of the unique properties of the SEC target, the WL-32000 is able to operate over a very wide range of scene illuminations and exhibits excellent sensitivity with moving as well as with stationary scenes. Localized regions of a scene which are sufficiently bright to cause saturation do not produce halation or blooming so that information from surrounding regions is not obscured. The excellent storage characteristics of the SEC target permit the integration of low light level images for extended periods of time. The WL-32000 also performs well at slow scanning rates as well as at the normal scanning rate of 30 frames per second.

- **Ultra High Sensitivity**
- **S-25 Spectral Response**
- **Low Lag**
- **Fiber Optic Faceplate**
- **Excellent Integration & Storage**
- **Rugged, Compact Design**
- **No Halation**
- **Low Power Consumption**
- **Wide Dynamic Range**
- **Simple Operation**

The image intensifier and the image section of the SEC camera tube both remain in focus at all operating voltages. Either or both of these voltages may be varied to provide a convenient means of gain control.

Scan power and voltage considerations for the camera tube reading section are similar to those for a 1" all-magnetic vidicon. Suitable deflection yokes and focusing coils are commercially available.

The WL-32000 is designed for applications where ultra-high sensitivity is required. It may be used for example to provide a good quality television picture (approximately 70% of maximum high light resolution) in situations where the scene illumination is as low as 2×10^{-5} fc. This corresponds to the illumination levels typically found under a heavy overcast sky with no moon.

The low lag characteristic of the SEC target enables the WL-32000 to maintain high performance for dynamic as well as static scenes.

The WL-32000 is suitable for a wide range of low light level applications. It may be fiber-optically coupled to a suitable image converter to permit detection of X or UV radiation as well as near infrared radiation.

September 1968
New Information
S6–3A–11C, S5–10C, WI–1300

Westinghouse

Principles of Operation

The WL-32000 intensifier SEC camera tube is schematically illustrated in Figure 1. It consists of two parts, first, an electrostatically focused image intensifier with a photocathode diameter of 40 mm and an output phosphor diameter of 25 mm, and second, an SEC camera tube to which the image intensifier is fiber-optically coupled. The SEC camera tube consists of an electrostatically focused diode image section, a Secondary Electron Conduction (SEC) target and a magnetically focused and deflected reading section.

An optical image focused onto the plane surface of the intensifier's input fiber optic is conveyed to an S-25 photocathode deposited upon the inner curved surface. The number of photoelectrons emitted from the photocathode is directly proportional to the amount of incident radiation. An electrostatic lens, formed by applying a potential between the cathode shield and anode cone electrodes, focuses the electrons onto an aluminized P-20 phosphor screen deposited upon the curved surface of the output fiber optic faceplate. Each photoelectron gains sufficient energy in falling through the potential difference between the photocathode and the phosphor screen to cause the emission of many photons from the phosphor screen thereby providing a substantial light gain. Additional brightness gain is obtained because the electron image is reduced in size as it is transmitted from the photocathode to the phosphor screen.

The output fiber optic of the image intensifier is in intimate contact with the input fiber optic of the SEC camera tube (a thixotropic immersion oil or Dow Corning No. 20-057 optical coupling grease is used to optimize coupling). The light image produced at the P-20 phosphor screen is thus efficiently conveyed to a second photocathode (S-20) deposited on the inner surface of the camera tube faceplate where, again, photoelectrons are emitted from the illuminated area of the image in direct proportion to the amount of illumination.

These photoelectrons are accelerated towards the SEC target where they are brought to focus by an electrostatic lens similar to that of the image intensifier. As the electron image is transferred from the photocathode surface to the target, it is reduced in size; the magnification is approximately 0.64.

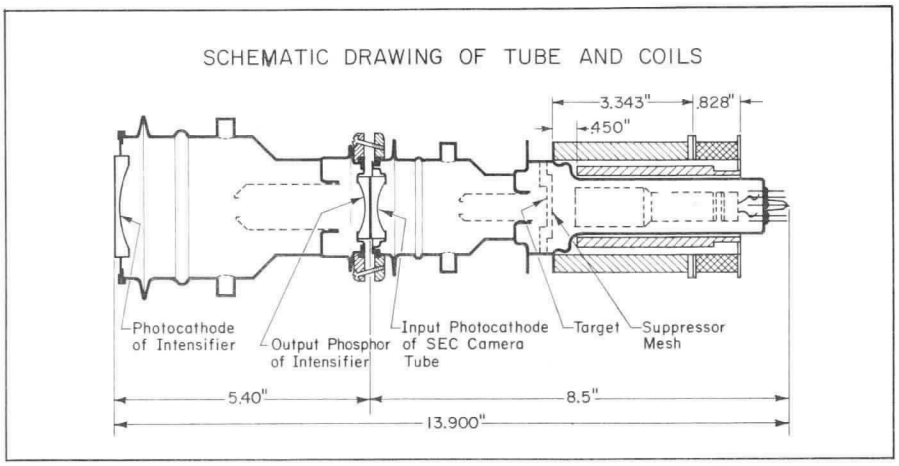

FIGURE 1

The SEC target consists of a supporting membrane of Al_2O_3 approximately 500 Å thick followed by a 500 Å layer of aluminum, which forms the signal electrode. Deposited on this, and facing the reading gun, is a highly porous layer of KCl. By applying a positive potential to the aluminum signal plate and stabilizing the potential of the KCl surface at approximately gun cathode potential, (by scanning the KCl surface with the low velocity electron beam), an electric field can be established across the KCl layer.

Photoelectrons arriving at the target with energies of approximately 8 keV penetrate the Al_2O_3 and Al layers and dissipate most of their energy within the KCl layer, by generating secondary electrons. An important feature of the SEC target is the release of secondary electrons into the vacuum interstices between the particles of KCl. Under the influence of the internal electric field the secondary electrons migrate in vacuum towards the signal plate. Conduction of the secondary electrons, therefore, takes place in vacuum and not in the *conduction band* of the KCl, thus avoiding the persistence effects caused by the trapping and subsequent release of charge carriers by shallow trapping centers. The movement of electrons within the KCl layer towards the signal plate creates a positive charge pattern which, in spacial distribution and intensity, corresponds to the optical image focused onto the tube faceplate. Because of the high resistivity of the low density target, the charge pattern can be stored for long periods of time.

The charging of the KCl layer is periodically interrupted by the scanning beam, which returns the KCl to gun cathode potential by depositing electrons on the positively charged areas. This current pulse, constituting the video signal, is capacitively coupled to the signal plate. The current flowing in the signal plate is used to develop a voltage across a load resistor which, after amplification, can be used to produce a video picture on a television monitor in the usual manner.

The low velocity electron beam which scans the target is produced by an electron gun consisting of an indirectly heated thermionic cathode, a control grid (G1), and an accelerating grid (G2). The beam is focused at the surface of the target by the combined action of the uniform magnetic field of an external coil and the electrostatic field of G3. A field mesh (G4) serves to provide a uniform decelerating electrostatic field to the target.

A second mesh electrode, G5, (suppressor mesh) is positioned close to the target surface. The maximum potential to which the target surface can rise is limited to the potential of the suppressor mesh and this is normally operated at a potential just below the crossover potential for KCl (approximately 15 volts). Alignment and deflection of the beam is accomplished by transverse magnetic fields produced by external coils. (See Figure 1). The photocathode of the image intensifier is normally operated at 22.5 kV with respect to the anode of the SEC camera tube which is at ground. The output of the Intensifier and the photocathode of the SEC camera tube are maintained at 7.5 kV leaving a 15 kV drop across the image intensifier.

WL-32000
Intensifier SEC Camera Tube

All Magnetic Gun
Electrostatic Image Sections
40 mm Image Diagonal

Performance Data

Spectral Response

The spectral response of the WL-32000 is determined by the image intensifier which employs an S-25 photosurface deposited on a dark clad fiber optic faceplate. A typical absolute spectral response for this faceplate-photocathode combination is shown in Figure 2. The peak sensitivity occurs near 460 nm with high sensitivity in the near infrared. The typical sensitivity at 800 nm is 12 mA/W and at 850 nm is 7 mA/W. The typical photocathode sensitivity to white light (2870°K) is 225 μA/lm. Minimum values are 175 μA/lm, 6 mA/W at 800 nm and 1 mA/W at 850 nm.

Sensitivity

The high quantum efficiency of the first photocathode, the high gain of the image intensifier, efficient optical coupling between the P-20 phosphor screen of the image intensifier and the S-20 photocathode of the camera tube, and the high gain of the SEC target all combine to provide a typical sensitivity of 4 mA/fc, with a minimum sensitivity of 3 mA/fc at a faceplate illumination of 10^{-5} fc (see Figure 3). Since the image size at the photocathode is 32 x 24 mm, this corresponds to a typical sensitivity of approximately 470 mA/lm.

Light Transfer Characteristics

The light transfer characteristics of the WL-32000 are shown in Figure 3. The gamma varies from nearly one at lower light levels to about 0.6 at light levels of from 10^{-5} to 10^{-4} fc. At higher light levels, the target saturates at a surface voltage essentially equal to that of the suppressor mesh (G5). Although this provides a "knee" in the transfer curve, the light levels associated with the "knee" may cause image "burn-in" after prolonged exposure (see paragraph titled "Maximum Exposure Levels"). However, the tube may be safely operated at this and higher light levels by reducing the photocathode voltage.

The transfer function of Figure 3 applies for the standard 1/30 second frame time with photocathode and target voltages adjusted for optimum performance. Under these conditions the tube will provide a typical high-light signal current of 150 nA (minimum 140) for extended periods. Using a suitable preamplifier (see section titled "System Considerations") the signal current provides a peak signal to rms noise ratio of about 50. The equivalent visual signal-to-noise ratio[2] is about 130 or 43 db. When the WL-32000 is operated at maximum

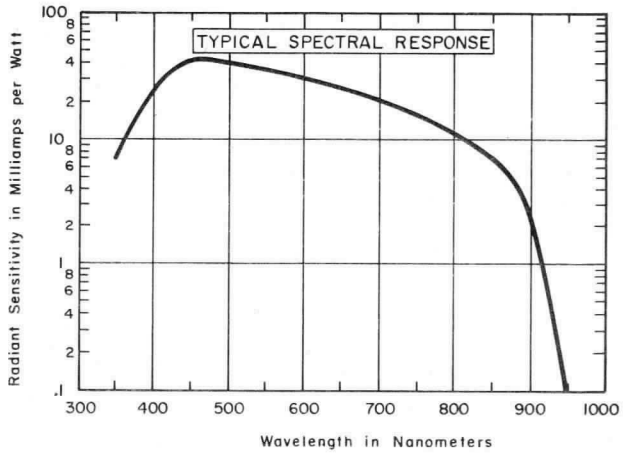

FIGURE 2

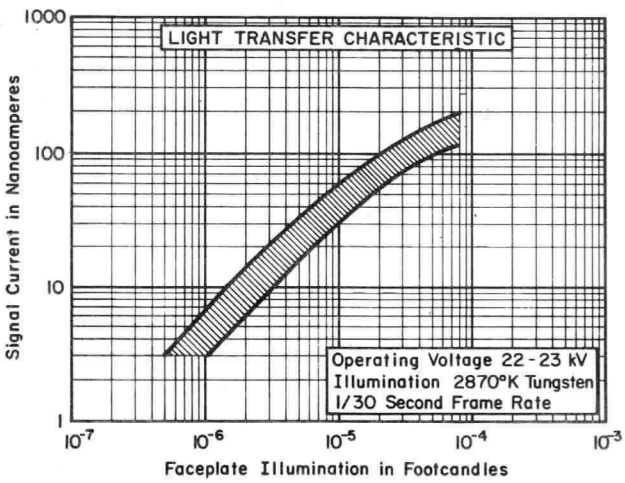

FIGURE 3

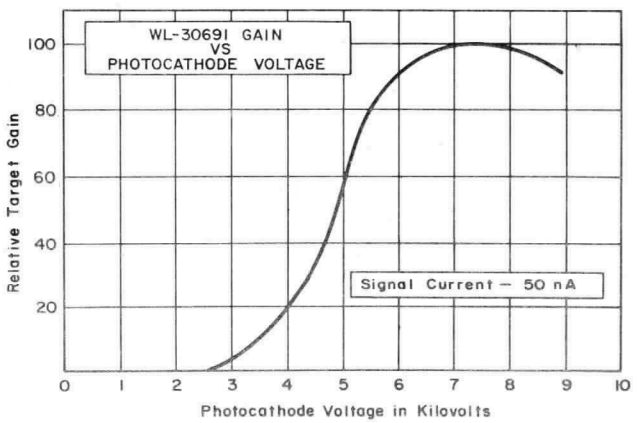

FIGURE 4

Westinghouse

gain the signal-to-noise ratio is generally limited to lower values due to photon-shot noise. It is therefore important never to use more gain than is necessary.

The excellent storage characteristics of the SEC target makes it possible to use the WL-32000 in slow scan applications. It should be noted that, when continuous slow scanning is used, the highlight signal current is reduced in proportion to the increase in frame time. This reduction in highlight signal current can be avoided by using digital scanning techniques where the beam rapidly scans a single resolution element and is then brought to rest before being pulsed to scan the following resolution element.

The gain of the SEC target increases with target voltage. Dark current is non-existent over the entire range of useful target voltages. Practical limits to the maximum target voltage are imposed by the onset of lag and the appearance of target grain. The optimum target voltage is specified in the test data supplied with each tube. Although some degree of gain control can be achieved by operating the target at lower voltages, this approach is not recommended because the storage capacity and, therefore, the highlight signal current decreases with decreasing target voltage[3].

Gain Control

Effective gain control can be accomplished by varying the photocathode voltage of the image intensifier or the SEC camera tube or both. The relative small signal target gain, as a function of the camera tube photocathode voltage, is shown in Figure 4. Varying the camera tube photocathode voltage from 3.5 to 7.5 kV provides a gain control range of at least 15 to 1 with no perceptible loss in resolution and an image rotation of about 1°. A larger range can be obtained by further reducing the photocathode voltage; however, the picture quality is gradually degraded by the appearance of grain.

Figure 5 shows the gain of the image intensifier as a function of its operating voltage. The voltage can be reduced to as low as 4 kV without a perceptible loss in resolution providing a gain control range of as much as 65. This together with the range for the camera tube provides an overall gain control range of about 1000:1 with no perceptible loss in resolution.

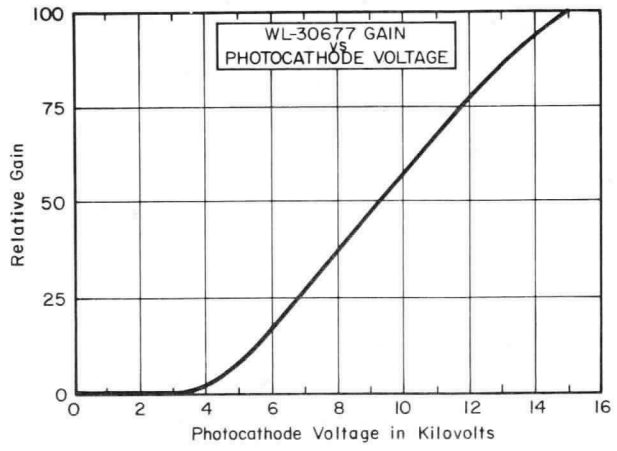

FIGURE 5

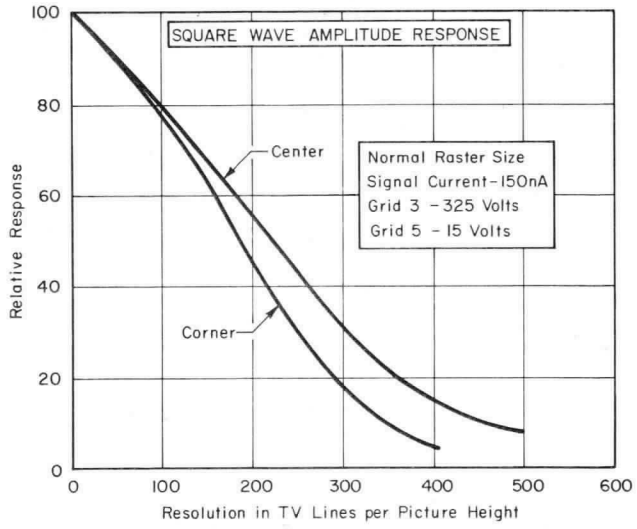

FIGURE 6

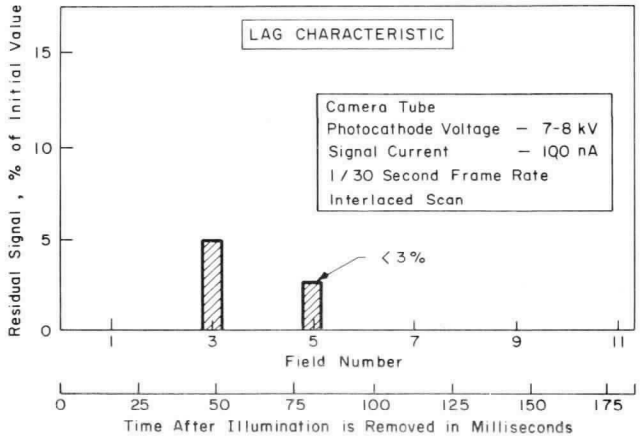

FIGURE 7

WL-32000
Intensifier SEC Camera Tube

All Magnetic Gun
Electrostatic Image Sections
40 mm Image Diagonal

Resolution

Figure 6 shows a typical uncompensated square wave response for the WL-32000. The curve given for the corner[4] is obtained when the tube is adjusted for best center resolution. The corner resolution can be improved to approximately match that of the center by dynamically focusing the G3 electrode with a suitable waveform of approximately 10 volts amplitude.

Values for the center square wave amplitude response at 200 and 400 TV lines per picture height are typically 50% and 15% with minimum values of 45% and 10% respectively. No significant variation in the modulation transfer function occurs for photocathode voltages for the camera tube ranging from approximately 3.5 to 8 kV and image intensifier voltages ranging from 4 to 15 kV. With a well-designed preamplifier, the typical limiting resolution is 500 TV lines per picture height at the center and 400 TV lines at the corner.

Lag Characteristics

The signal generating mechanism of the SEC target is essentially lagless because conduction of the secondary electrons across the storage layer takes place in vacuum rather than in the conduction band. The small amount of lag that is observed is believed to be because the stored charge resides within the KCl layer rather than on the surface. This limits the beam acceptance resulting in a discharge lag. At higher target voltages, the stored charge penetrates further into the layer resulting in increased lag. Figure 7 shows the lag characteristic for a typical tube operated at optimum target voltage and at a signal current of 100nA.

In the first frame, more than 90% of the signal is read out, leaving less than 10%, typically 5%, to be read out in the second frame. In the third and succeeding frames, the residual signal is unperceptible. This performance is significantly better than many camera tubes even when they are operated at high light levels. The dependence of lag on signal current is shown in Figure 8. At lower light levels, the lag increases primarily because of the poorer beam acceptance associated with the lower voltage excursions on the target surface.

The relative freedom from lag provides the WL-32000 with a dynamic sensitivity which is only slightly less than its static sensitivity. This is illustrated in Figure 9 which shows the limiting resolution as a function of light level for

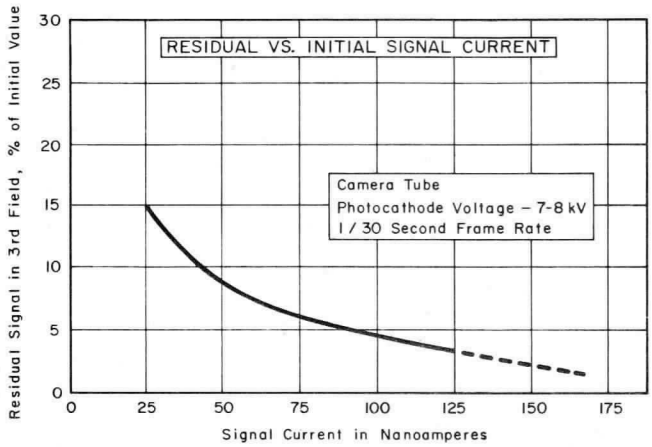

FIGURE 8

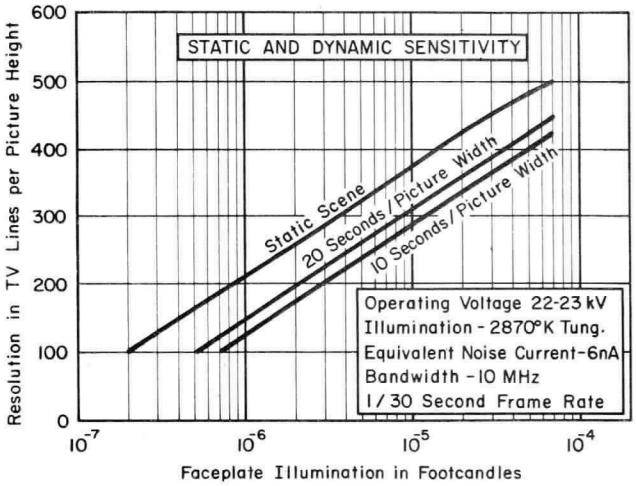

FIGURE 9

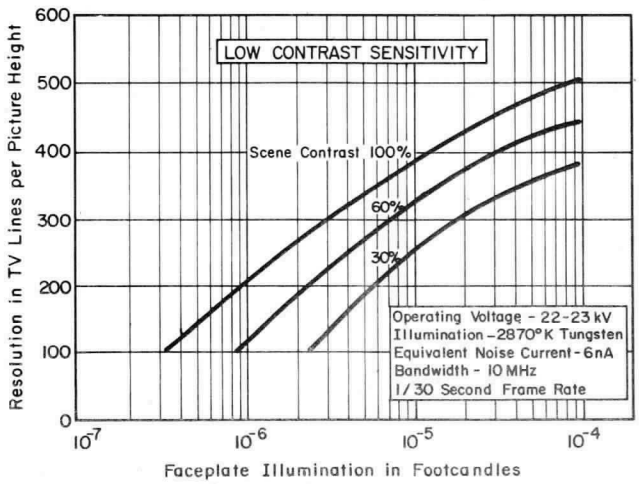

FIGURE 10

Westinghouse

both stationary and moving scenes. In one case, the image moved across the picture width in a 20-second period. In order to obtain the same resolution with the dynamic scene, it is necessary to increase the light level by about a factor of 2.5. Under similar circumstances, the image orthicon requires an increase in light level of about a factor of 100.[5]

Low Contrast Sensitivity

The sensitivity illustrated in Figure 9 is concomitant with a 100% scene contrast. However, in most practical applications, the scene contrast is considerably less than 100% and, in such cases, the sensitivity of the tube to low contrast scenes becomes very important. The excellent low contrast sensitivity of the WL-32000 is shown in Figure 10.

Integration and Storage

The SEC target used in the WL-32000 has an extremely high resistivity. Thus a signal can be integrated over a period of several minutes without degradation due to target leakage. The maximum integration period is limited only by background emission in the image intensifier and image section of the WL-30691 which can saturate the target.

Background in the WL-32000 is due primarily to spurious emission in the image intensifier. The background of the image intensifier is specified as the input illumination required to produce an output equal to that observed when the photocathode is masked. This Equivalent Background Illumination (EBI) is typically 2×10^{-11} lm/cm^2 (about 2×10^{-8}fc) at 15 kV and room temperature. Thus integration times of 5 seconds are typical at maximum gain with the WL-32000.

In applications where performance is limited by photon-shot noise, it is often desirable to operate with reduced gain and longer integration periods in order to improve the signal-to-noise ratio. In such cases selected tubes can be used to provide integration times of up to 30 minutes.

Once a signal has been integrated, it can be stored for many hours provided the photocathode voltage is turned off. The stored signal can then be read out in essentially one frame at any convenient scan rate.

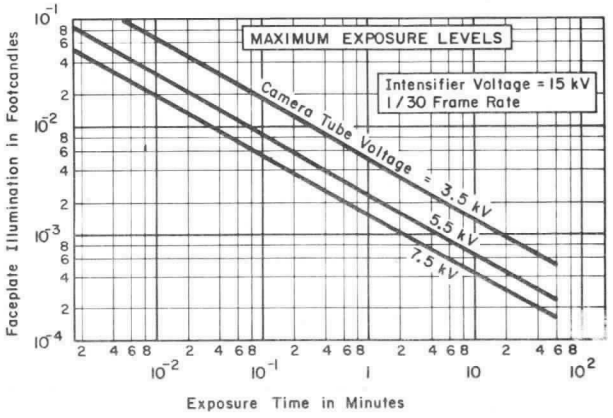

FIGURE 11

Uniformity and Distortion

Shading in the WL-32000 is caused by the slight radial change in magnification in the image section of the camera tube and by variations in phosphor efficiency in the image intensifier. The video signal uniformity defined as the percentage deviation from the maximum signal level is typically 35% and is always less than 50%. It is measured across a horizontal line at the center of the picture.

Geometric distortion is typically 2% with a maximum of 4%. It is measured with an EIA linearity chart in accordance with IEEE Standard Number 202[6].

Picture Quality

Over the recommended operating ranges of the WL-32000 there are no signal redistribution effects so that a signal in a given area is essentially independent of the signal in a neighboring area. Thus, the tube is free of halation. Slight blooming, or image growth, occurs at very high light levels due to the beam bending associated with excessive voltage excursions at the target surface.

All tubes are free of fixed pattern noise, such as smudges or demarcation lines. The maximum number and distribution of small area blemishes light or dark, are defined in the table below:

	Zone 1	Zone 2	Zone 3
All Blemishes	2	5	30
Blemishes with a major dimension of 7 or 8 television lines ...	1	2	8

The zones are defined as follows:

Zone 1 ..... Central 10% of raster area.
Zone 2 ..... Central 20% of raster area.
Zone 3 ..... Entire raster area.

These blemishes are generally bright spots and are defined as any spurious signal whose major dimension covers three or more television lines. No blemish whose major dimension covers nine or more television lines is permitted anywhere in the raster.

Maximum Illumination Levels

If an excessive amount of energy is dissipated in the SEC target, the target suffers a loss of gain, resulting in a permanent negative image (burn-in). Damage can be caused by either an excessive target voltage or by unduly high light levels. In the first case, damage can be avoided by maintaining the target voltage at or below the value recommended in the data supplied with the tube. Damage associated with high light levels also depends on the photocathode voltage and the exposure time. These relationships are illustrated in Figure 11. The curves represent the maximum energy exposure that can be tolerated without danger of permanent target damage for various photocathode voltage. For example at a SEC camera tube photocathode voltage of 5.5 kV and a image intensifier photocathode voltage of 15 kV, a high-light photocathode illumination of 2×10^{-3} footcandles can be tolerated for periods of up to 1 minute without "burn-in". (For a lens at f/11 this illumination corresponds to a scene brightness of about 1.2 footlamberts). Longer exposure times may result in permanent damage. It should be noted that, in most cases, exposures at or near those described by the

WL-32000
Intensifier SEC Camera Tube

All Magnetic Gun
Electrostatic Image Sections
40 mm Image Diagonal

General Data

Faceplate . . . . . Fiber Optic
Numerical Aperture (Nominal) . . . 1.0
Useful Diameter . . . . . 40 mm
Photocathode . . . . . S-25 (Figure 2)
Image Section
(Intensifier & Camera Tube):
Focusing Method . . . . . Electrostatic
Configuration . . . . . Diode
Target Shunt Capacity . . . . 25 pF typ.
. . . . 30 pF max.

Reading Section:
Focusing Method . . . . . Magnetic
Focusing Coil VF-558-1
or Equivalent*
Deflection Method . . . . . Magnetic
Deflection Yoke VYL-160
or Equivalent*
Alignment Coil VA-132
or Equivalent*
Cathode . . . . . Indirectly Heated
Heater Power . . . . . 1 Watt
Base . . . . . EIA E8-11
Socket #544 18088 . (Cinch Mfg. Co.)
Overall Length . . . . . 13.9 Inches
Maximum Diameter . . . . . 4.0 Inches
Diameter of
Reading Gun Bulb . . . . . 1 Inch
Weight . . . . . 1.9 Pounds
Operating Position . . . . . Any
*Cleveland Electronics Inc.

Operational Data	Maximum Rating	Typical Operation	Units
Image Size at the Faceplate: 24 x 32 mm			
Direction of Scan: Parallel to a Line Joining Axis of Tube to Target Lead.			
Faceplate Illumination	See Figures 3 and 11		
Intensifier Photocathode Voltage (reference anode cone)	29	22.5	kV
(reference Phosphor)	20	15	kV
Camera Tube Photocathode Voltage	9	7.5	kV
Anode Cone Voltage	NA*	Ground	—
Target Voltage (Reference 7)	30	10 to 30	Volts
Grid 5, Suppressor Mesh, Voltage (Reference 8)	40	15	Volts
Grid 4, Field Mesh, Voltage (Reference 9)	400	360	Volts
Grid 3, Focus Electrode Voltage	400	340	Volts
Grid 2, Accelerator, Voltage	350	300	Volts
Grid 1, Voltage	−150 +0	−40	Volts
Heater Voltage	6.9	6.3	Volts
Peak Heater to Cathode Voltage:			
Heater Negative	125	NA*	Volts
Heater Positive	10	NA*	Volts
Minimum Peak-to-Peak Blanking Voltage Applied To:			
Cathode (Positive Pulse)	NA*	30	Volts
Grid 1 (Negative Pulse)	NA*	80	Volts
Cathode Voltage	NA*	Ground	—
Magnetic Focusing Field (Center of Coil)	NA*	40	Gausses
Magnetic Alignment Field	NA*	0 to 4	Gausses
Peak Deflection Current for Specified Yoke:			
Horizontal	NA*	170	mA
Vertical	NA*	35	mA
Peak Signal Current (Reference 11)	400	NA*	nA

* Not Applicable

curves of Figure 11, may cause a temporary loss in gain. However, recovery is complete within a period of several minutes.

Life and Environmental Characteristics

The WL-32000 has been used extensively in various applications and has shown useful lifetimes of 500 hours or more, comparable to vidicons and image orthicons. It does not require an extended warm-up period and shows highly reproducible performance even at operating temperatures as low as −54°C or as high as +55°C. The only exception to this is that in some cases the background inherent in the intensifier may become objectionable at higher temperatures. The background can of course be reduced by reducing the intensifier voltage.

The only performance parameter which may change with extended operation is sensitivity which decreases at most by one f-stop. When stored under suitable conditions, e.g. a clean dry environment at room temperature, the tube remains stable and shows an extremely long shelf-life.

The WL-32000 has been designed for use in systems which must operate under the environmental conditions described in military specification MIL-E-5400J. The rugged design of the tube is compatible with the most severe vibration levels (curve IV of this specification). However, care must be taken in the design of the camera head so that resonances which could produce microphonics are avoided.

Operating and Handling Considerations

Important Precautions

1. *The tube is supplied with an external voltage limiting device connected between the SEC target and the suppressor mesh (G5). This should not be disconnected, as its purpose is to protect the target from permanent damage which could be caused by the accidental application of a high voltage (e.g. from an electrostatically charging human operator).*

2. *The target and suppressor voltages recommended with each tube should not be exceeded.*

3. *The tube should not be operated at exposure levels greater than those illustrated in Figure 11.*

4. *The horizontal and vertical deflection power should be adjusted to ensure that the target is either normally scanned or over-scanned before the reading beam is turned on. Avoid Underscanning.*

Set-up Procedure

As long as the above precautions are taken, the tubes can be set up and operated in a manner similar to that of a vidicon. No special "warm-up" time is required. The sequence given below is recommended as a convenient set-up procedure.

1. Install the tube in the camera head using the focus, deflection, and alignment coil positions shown in Figure 1. The polarity of the focusing coils should be such that an externally positioned north seeking pole is attracted to the target end of the focusing coil. It is also recommended that a 40 mm diagonal rectangular mask with a 4:3 aspect ratio be used to prevent light reaching unused parts of the photocathode.

Westinghouse

2. Make connections to all electrodes and apply deflection voltages sufficient to over scan the target.
3. Apply maximum negative bias to G1. Apply voltages to the heater, focusing coil and alignment coils.
4. Apply the recommended voltages to G2, G3, G4, G5, and target.
5. Apply approximately 10^{-6} fc uniform illumination to the faceplate of the tube. Turn on photocathode voltages and adjust the G1 voltage until the beam current is sufficient to discharge the target.
6. Center and focus a test pattern on the faceplate of the tube so that the image size is 32 x 24 mm. The illumination level should be adjusted to about 10^{-5} fc.
7. Adjust the deflection amplitude and centering controls such that the target ring is just visible in the corners of the picture. Then further decrease the deflection power until the test chart completely fills the picture.
8. Adjust the G3 beam focus control and optical focus alternately until no further improvement in picture quality is obtained. The G4 voltage should always be maintained above that of G3 to prevent positive ions generated in the G3 drift space from landing on the target.
9. Adjust alignment currents for best beam landing in the following manner. Reduce the G5 voltage to a value just above the threshold for beam landing. Adjust the alignment current to center and maximize the area over which the beam can land. If a G5 voltage of more than 1 or 2 volts is needed for beam landing over the entire raster, check the positions of the focusing and deflection coils.
10. Return G5 voltage to recommended value, check G3 and optical focus.

Note:
If the target "crosses over" during the operation, manifested by the appearance of a black area on the television monitor, the recommended procedure for returning to normal operation is to reduce the G5 voltage temporarily to about 10 volts and either reduce the faceplate illumination or increase the beam current.

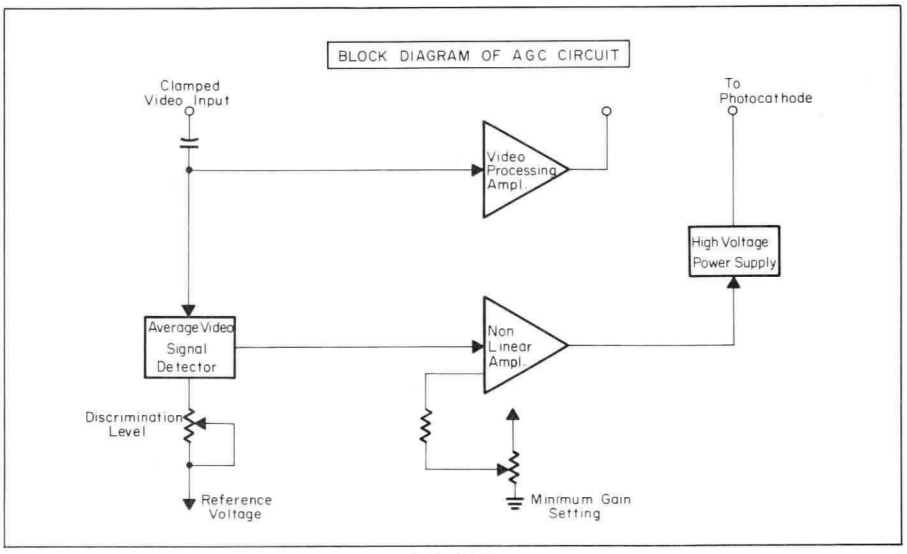

FIGURE 12

Shutdown Procedure

The only important feature of the shutdown procedure is that the deflection power should be switched off only after the reading beam has been switched off. The recommended sequence is:

1. Turn off all voltages except the deflection supplies.
2. Turn off deflection power.

Systems Considerations

System requirements for the WL-32000 are similar to those for a standard 1" magnetically deflected and focused vidicon. Only three additional voltages are required; two for the operation of the electrostatic intensifier and image section and one for the suppressor mesh electrode (G5). The mesh, operated at about 15 volts, may be supplied by a voltage divider across the conventional gun supply.

Both this supply and the power supply used for the focus coil should be regulated to a level of 0.1% or less. Similarily, ripple should not exceed 0.1%.

The suppressor mesh should be maintained at AC ground to prevent pickup of spurious signals. It is recommended that a by-pass network (e.g. a 100K series resistor and a .01μF capacitor connected directly to G5) be located as closely as possible to the suppressor mesh electrode.

Because the focus of the intensifier and camera tube image section is independent of photocathode voltage, regulation is not critical. However, ripple is objectionable because it can be coupled into the video signal. It is recommended that the ripple should not exceed 0.1%. Automatic gain control can be accomplished by sampling the video signal and using a feedback network to regulate the photocathode voltages. A block diagram of such a network is shown in Figure 12.

Dynamic focusing and the reduction of shading can be accomplished using techniques similar to those used with standard 1" all-magnetic vidicons. Dynamic focusing requires a 10 volt wave form applied to G3. Shading can be essentially eliminated by applying a parabolic negative going voltage pulse to the gun triode.

Provision should be made in the design of the camera head to shield the target from external magnetic and electrostatic fields which could introduce perturbations into the signal current. The magnetic fields produced by the focus and deflection coils may be shielded by thin mu-metal discs positioned at the target ends of both coils. These are included as an integral part of the focus coil. Separate discs are required for the deflection yoke. Effective shielding from electrostatic fields is provided by the metal flanges positioned on either side of the target-suppressor mesh region. It is recommended that these flanges be connected directly to a common ground.

WL-32000
Intensifier SEC Camera Tube

All Magnetic Gun
Electrostatic Image Sections
40 mm Image Diagonal

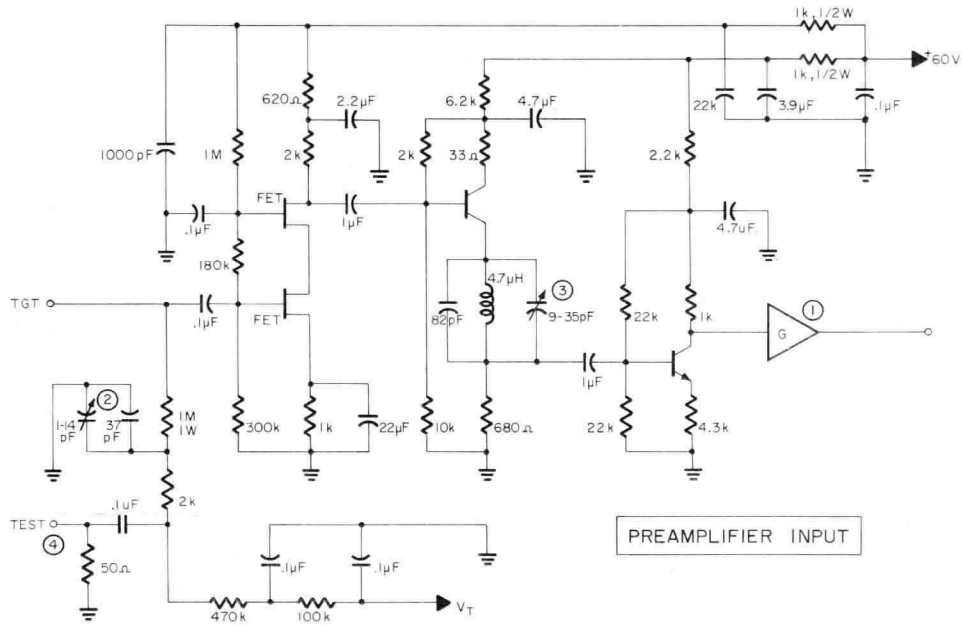

FIGURE 13

Provision should be made during the design of the camera head for secure mounting of the tube to eliminate possible resonances which could introduce microphonics. (Attention is drawn to the option of encapsulating the WL-32000 in a silicon rubber compound to facilitate mounting). The camera head should also be designed so that during operation the temperature of the tube does not exceed 55°C in the target and the photocathode regions.

In order to maximize the signal-to-noise ratio, it is important to keep the equivalent input noise current of the preamplifier as low as possible. For the shunt capacity of 25 pF and a bandwidth of 7 MHz, equivalent noise currents of 3 - 4 nA RMS have been obtained using standard low noise cascode input circuits. For references on the design of low noise preamplifiers, see Note 10

Figure 13 shows a suggested design for a cascode type input to a preamplifier, using field effect transistors. The 9-35 pF variable capacitor may be used to adjust for variation in the camera tube and preamplifier input capacities. The test terminal may be used to inject a test or compensating signal. The input test signal is compensated by adjusting the 1-14 pF variable capacitor.

Westinghouse

Notes & References

An annotated bibliography of published work relating to the SEC target and to SEC camera tubes has been prepared by Westinghouse. Copies may be obtained by writing to Westinghouse Electronic Tube Division, Box 284 Elmira, N. Y. 14902.

1. (a) Boerio, A.H., Beyer, R.R., and Goetze, G.W. - "The SEC Target", Advances in Electronics and Electron Physics, Academic Press, Vol. 22A, pg. 229 (1966).

   (b) Goetze, G.W. and Boerio, A.H. - "Secondary Electron Conduction (SEC) For Signal Amplification and Storage in Camera Tubes", Proc. IEEE, Vol. 52, pg. 1007 (1964).

   (c) Goetze, G.W. - "Secondary Electron Conduction (SEC) and its Application to Photoelectronic Image Devices" - Advances in Electronics and Electron Physics, Academic Press, Vol. 22A, pg. 219 (1966).

2. The equivalent visual signal-to-noise ratio is the ratio of highlight video signal current to RMS noise current, multiplied by a factor of 3. [CCIR, International Radio Consultative Committee, Television Standards; Vol. 5 (1966).] An RMS noise current of 3 nanoamperes is assumed for the video preamplifier operating at a bandwidth of 7 MHz.

3. See Reference (a) of Note 1.

4. The corner resolution is measured at any point on the circumference of a circle whose diameter is 70% of the raster diagonal and concentric with the tube axis.

5. Parton, J.S. and Moody, J.C. - "Performance of Image Orthicon Type Intensifier Tubes", Image Intensifier Symposium, Fort Belvoir, Virginia, NASA SP (1961).

6. IEEE Standards on Television: Methods of Measurement of Aspect Ratio and Geometric Distortion", 202 (54-IRE2351).

7. The recommended target voltage is printed on a data sheet which accompanies each tube.

8. The function of the G5 electrode is to control the potential to which the target surface can rise. If the potential of the G5 electrode is set at a value higher than that of the crossover potential for KCl (approximately 15 volts) and if, because of a very bright exposure the target surface potential does rise above the crossover, then reading beam electrons will land on the target with sufficient energy to cause a net flow of electrons away from the target until the potential stabilizes at that of G5. The target will then fail to discharge and will produce a black area on the monitor. Operating the target in the "crossed over" mode is not recommended since it can lead to an increase in target grain. In order to discharge the target and resume normal operation, the G5 potential should be temporarily reduced to about 10 V.

9. It is recommended that the potential of the G4 electrode be maintained above the potential of G3.

10. (a) James, I.J.P. - "Fluctuation Noise in Television Camera Head Amplifier", Proceedings of IEE, Vol. 99, No. 20 p. 796 (1957).

    (b) "Fundamentals of Television Engineering" - G.M. Glassford, McGraw Hill, pp. 111 - 124 (1955).

11. The maximum rating of 400 nA for the peak signal current should not be confused with the value quoted for the maximum high light signal current (see paragraph entitled Light Transfer Characteristic). The maximum rating quoted here is a figure suggested for the system designers use and is an estimate of the maximum possible signal current that the tube is capable of providing for a short period of time.

WL-32000
Intensifier SEC Camera Tube

All Magnetic Gun
Electrostatic Image Sections
40 mm Image Diagonal

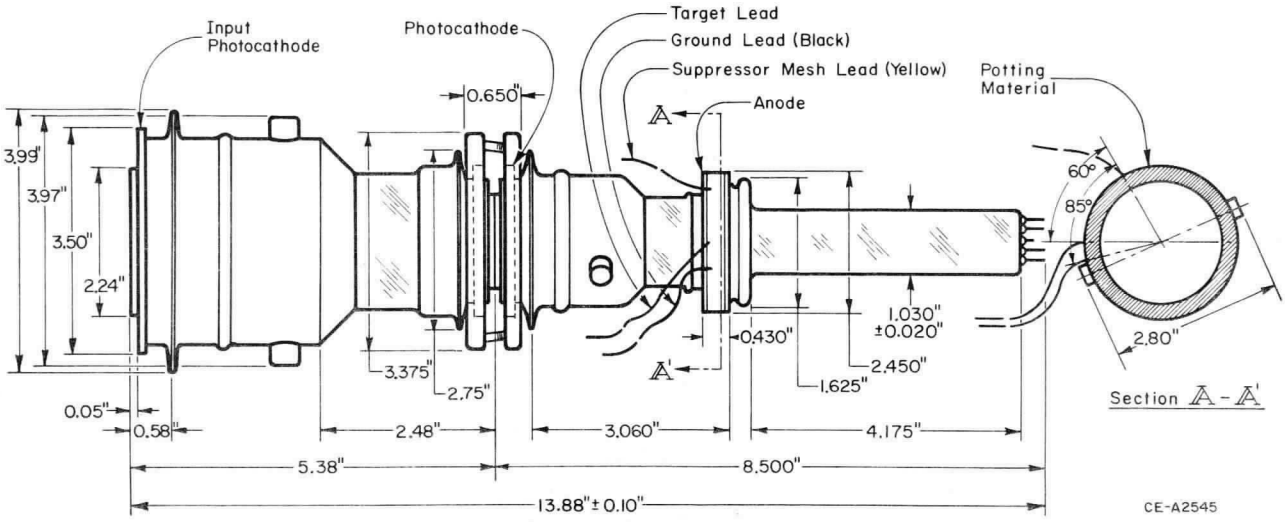

Option

If desired, in order to facilitate mounting, to provide environmental protection against humidity and to reduce the possibility of external voltage breakdown, the WL-32000 can be supplied with the intensifier and image section encapsulated in a silicon rubber compound. The material used is GE RTV 511. The dimensional outline of the encapsulated tube is shown below.

Index of Leads

Pin	*Electrode*	*Pin*	*Electrode*
1	Heater	6	Grid 3
2	Grid 1	7	Cathode
3	Grid 4	8	Heater
4	Internal Connection (DO NOT USE)	9	Index Pin, Internal Connection (DO NOT USE)
5	Grid 2		

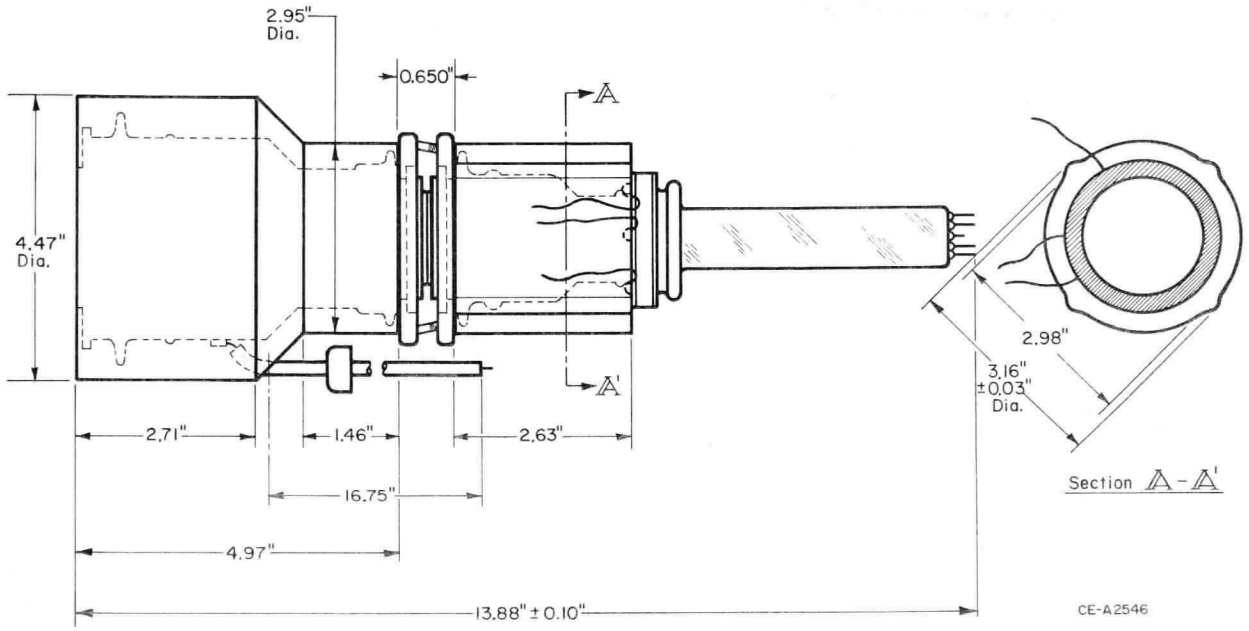

WL-32000
Intensifier SEC Camera Tube

All Magnetic Gun
Electrostatic Image Sections
40 mm Image Diagonal

For information on other SEC camera tubes, image intensifiers or vidicons, contact the Image Tube Product Sales Manager, Westinghouse Electronic Tube Division, Post Office Box 284, Elmira, New York 14902. Telephone - Area Code (607) 739-7951.

Westinghouse Electric Corporation
Electronic Tube Division, Elmira, N. Y. 14902
Printed in U.S.A.

WL-32002S TWO-STAGE IMAGE INTENSIFIER SYSTEM

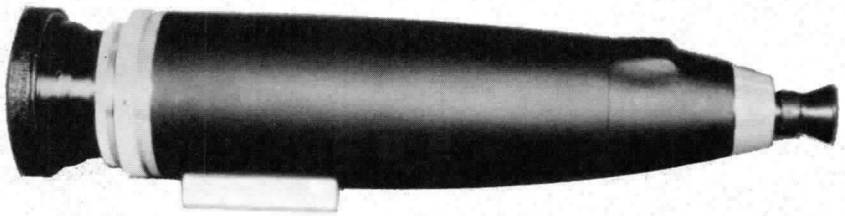

FEATURES:

Low Distortion	• Provides full use of viewing area
Demagnifying intensifiers	• Only two stages are needed to provide "starlight" viewing
Electrostatic Intensifiers	• Provide a lightweight, low-power system
Fiber-Optic Intensifier Faceplates	• Provides low loss coupling and superior electron optic design
Four Penlight Batteries Provide Power	• Replacement batteries are inexpensive and readily available
Simple Construction	• Permits field replacement of batteries and tubes
Different Objective Lenses Available	• Permits application of system to particular requirements

THE WL-32002S TWO-STAGE IMAGE INTENSIFIER SYSTEM

The WL-32002S intensifier system is a self-contained, direct viewing system that amplifies the available light from the scene being viewed. The system provides sufficient light amplification such that objects can be viewed under true starlight conditions. The device is thus a completely passive system; ie, requiring no artificial visible or infrared source of illumination.

Construction

The complete system is comprised of two image intensifiers (fiber optically coupled), lenses, power supplies and batteries. The image intensifiers are coupled by two retaining rings. The coupling is extremely rugged and at the same time can be easily separated in the field should tube replacements be necessary. The tubes are encapsulated along with the power supplies in a silicone rubber compound for ruggedization and for high-voltage operation. The fiber glass case provides a strong, but lightweight unit. Power for the system is supplied by four penlight batteries. The objective lens and eye-piece are easily removed for ease of packing and handling.

Image Intensifiers

The first stage of intensification is provided by the Westinghouse WL-30677, 40mm input, 25mm output electrostatic image intensifier. The second stage is the Westinghouse WL-30920, 25mm input, 16mm output electrostatic image intensifier. Both intensifiers have fiber optic input windows and the first stage has a fiber optic output window. Use of the fiber optics permits low loss coupling

and superior electron-optic designs, resulting in high resolution and low distortion systems. See Figure 1 for a schematic drawing of the intensifiers.

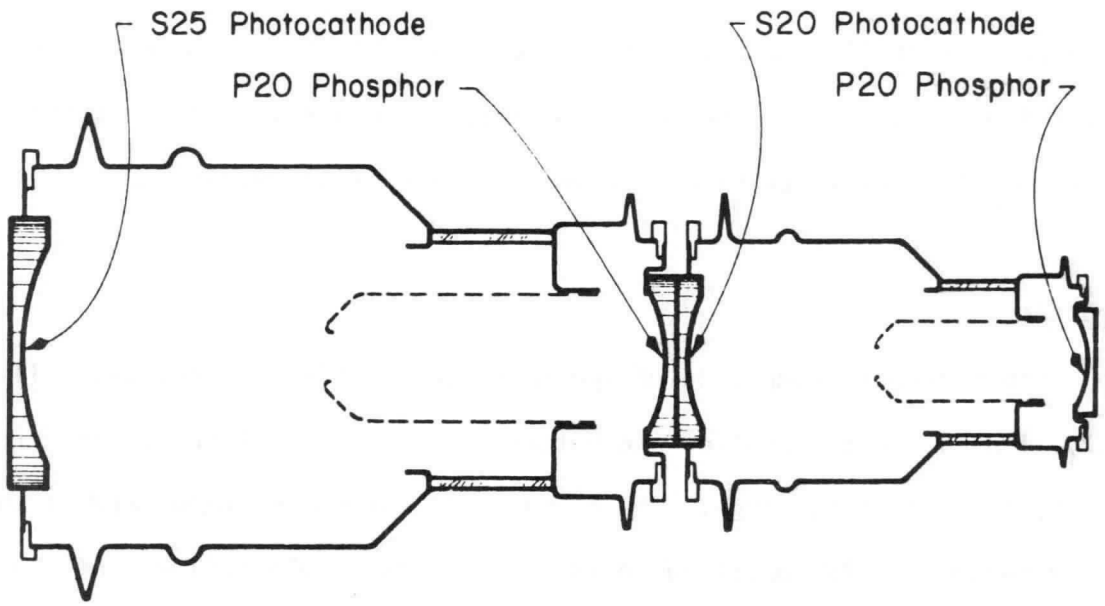

SCHEMATIC DIAGRAM OF A TWO-STAGE DEMAGNIFYING IMAGE INTENSIFIER

FIGURE 1

Because the intensifiers provide gain by demagnifying as well as by photoelectronic means, only two intensifiers are needed to provide starlight viewing. By eliminating a possible third intensifier (and the attendant coupling interface and two fiber optic faceplates) the system provides performance superior to existing military 40mm and 25mm three-stage intensifier systems. The superior performance is especially evident in practical, low contrast scenes.

Objective Lenses

The system is provided with either a 500mm focal length, f/4 reflective lens which provides a 4.5° field of view or a 76mm, f/.87 objective lens which provides a 30° field of view. Other lenses can be supplied to meet specific applications.

Physical Characteristics

Weight	· 14 pounds including battery and lenses, less tripod.
Length	· Approximately 20 inches (depending on objective lens).
Maximum Outside Diameter	· 4 inches (diameter may be larger depending on objective lens).
Color	· Black

Performance Characteristics

Operating Life	· In excess of 2,000 hours. Battery changes recommended every 100 hours. (Four penlight batteries required.)
Picture Quality (Illustrated in Figure 2)	· Distortion not more than 2% from center-to-edge of viewed scene.* Brightness uniformity is such that for 70% of the total output screen area, the brightness lies within 10% of the maximum.
Brightness Gain	· 30,000 for the cascaded image tubes. Complete system provides capability for viewing under starlight conditions (approximately 10^{-6} footcandles of scene illumination).

* Distortion is defined as $D = (M_c - M_1)/M_c \times 100\%$, where M_c is the paraxial magnification and M_1 is the integrated magnification measured over the useful input diameter.

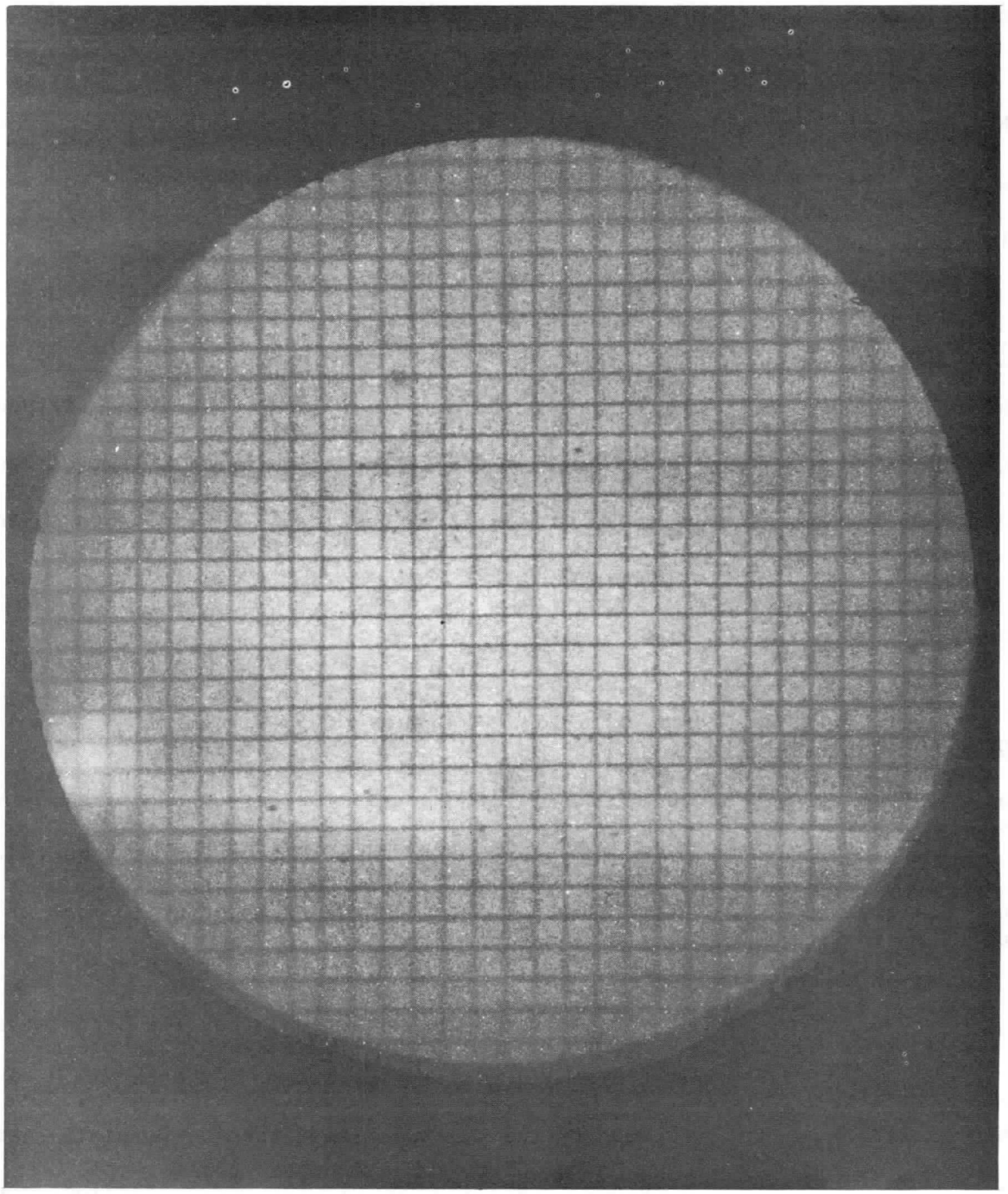

MESH PATTERN REPRODUCED BY THE IMAGE INTENSIFIER
ILLUSTRATING THE VERY LOW GEOMETRICAL DISTORTION

FIGURE 2

Resolution	• For sensor resolution as a function of illumination at different scene contrasts, see Figure 3. For system resolution, expressed as angular acuity vs. light level for different objective lenses, see Figure 4.
Input Photocathode	• S-25 (sensitive to visible and near IR radiation).
Output Phosphor	• P-20 (yellow-green).

Field Evaluation

In order to practically evaluate the curves and performance data, a field evaluation was undertaken and photographs were made from the output of the intensifier system. At the time the photographs were taken, there was no moonlight and about 20% cloud cover. Thus the major source of illumination was true starlight. In addition, there were traces of ground mist. The test range was typical of upstate New York; pastoral and remote from big city lights and sky scatter. A camera with a 50mm focal length, f/2.8 lens was used. Exposure times ranged from 1 to 3 seconds in an attempt to reproduce as nearly as possible the scene as it appeared through the erecting eyepiece to the observer.

Figures 5 through 8 portray the field test results. Note that different lenses and different ranges were used. The bar charts were six feet high with bar widths of 12", 6", and 1.5".

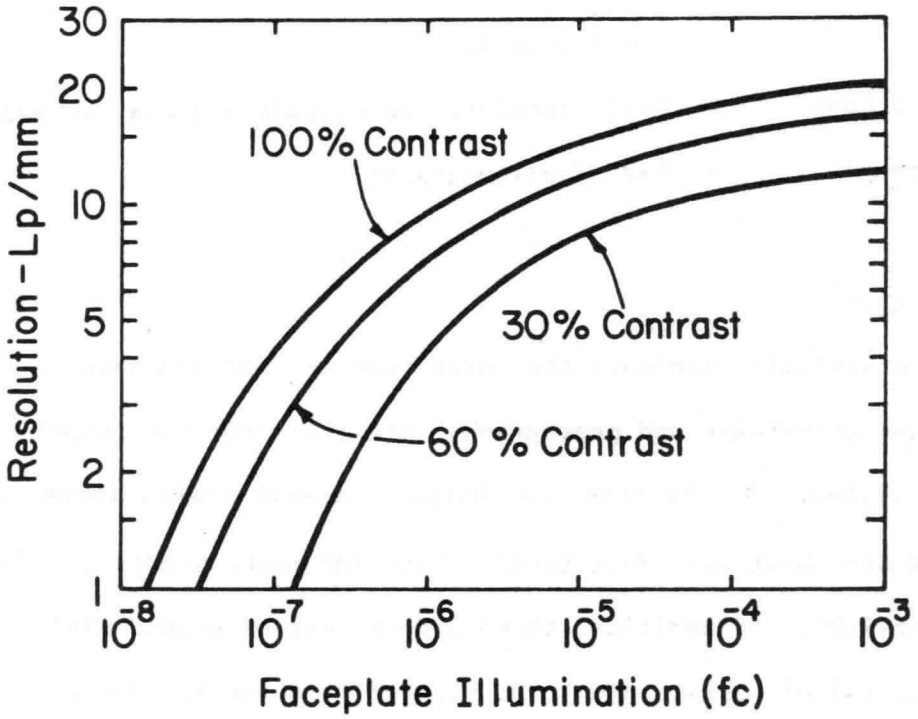

RESOLUTION OF THE COUPLED INTENSIFIERS REFERRED TO THE FIRST PHOTOCATHODE AS A FUNCTION OF FACEPLATE ILLUMINATION FOR DIFFERENT TEST PATTERN CONTRAST

FIGURE 3

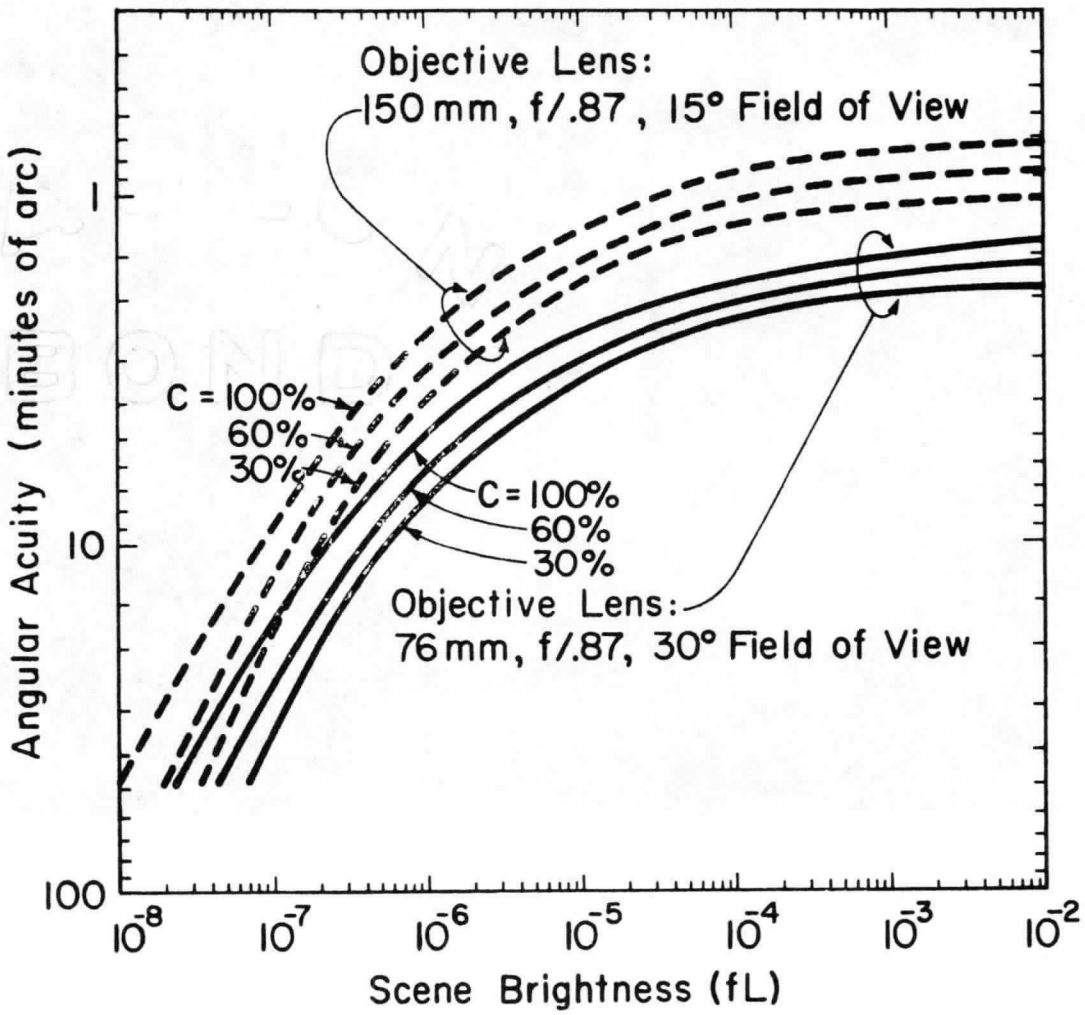

SYSTEM ANGULAR ACUITY AS A FUNCTION OF SCENE
BRIGHTNESS AND CONTRAST FOR TWO DIFFERENT OBJECTIVE LENSES

FIGURE 4



Illumination Conditions:	Starlight, 20% cloud cover, slight ground mist
Range:	100 m
Field of View:	30° (76mm, f/.87 objective lens)

FIGURE 5

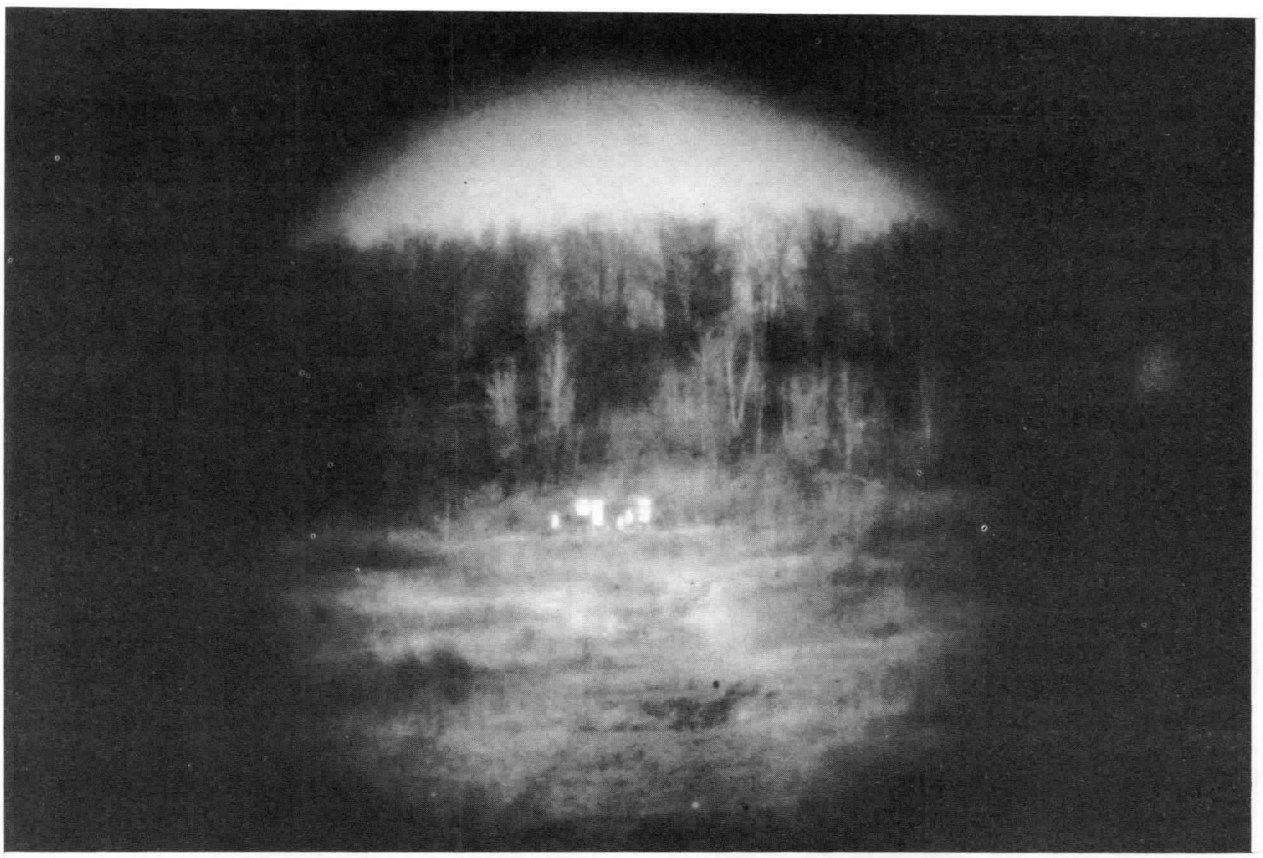

Illumination Conditions:	Starlight, 20% cloud cover, slight ground mist
Range:	200 m
Field of View:	30° (76mm, f/.87 objective lens)

FIGURE 6

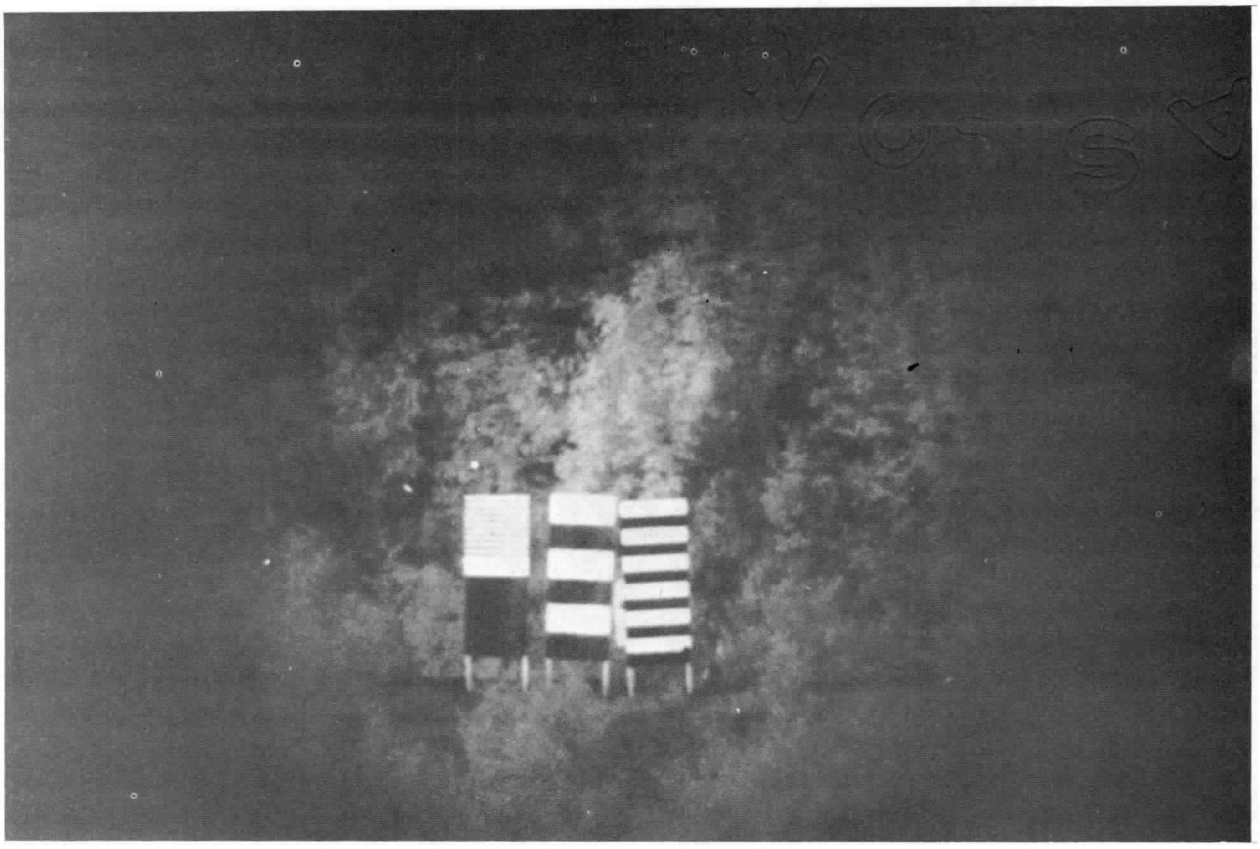

Illumination Conditions:	Starlight, 20% cloud cover, slight ground mist.
Range:	200 m
Field of View:	4.5° (500 mm, f/4 objective lens)

FIGURE 7



Illumination Conditions: Starlight, 20% cloud cover, slight ground mist.

Range: 1000 m

Field of View: 4.5° (500 mm, f/4 objective lens)

FIGURE 8

Westinghouse Electric International Co.
200 Park Avenue
New York, N. Y. 10017

Westinghouse

RADIATION DETECTORS

Proportional Counters

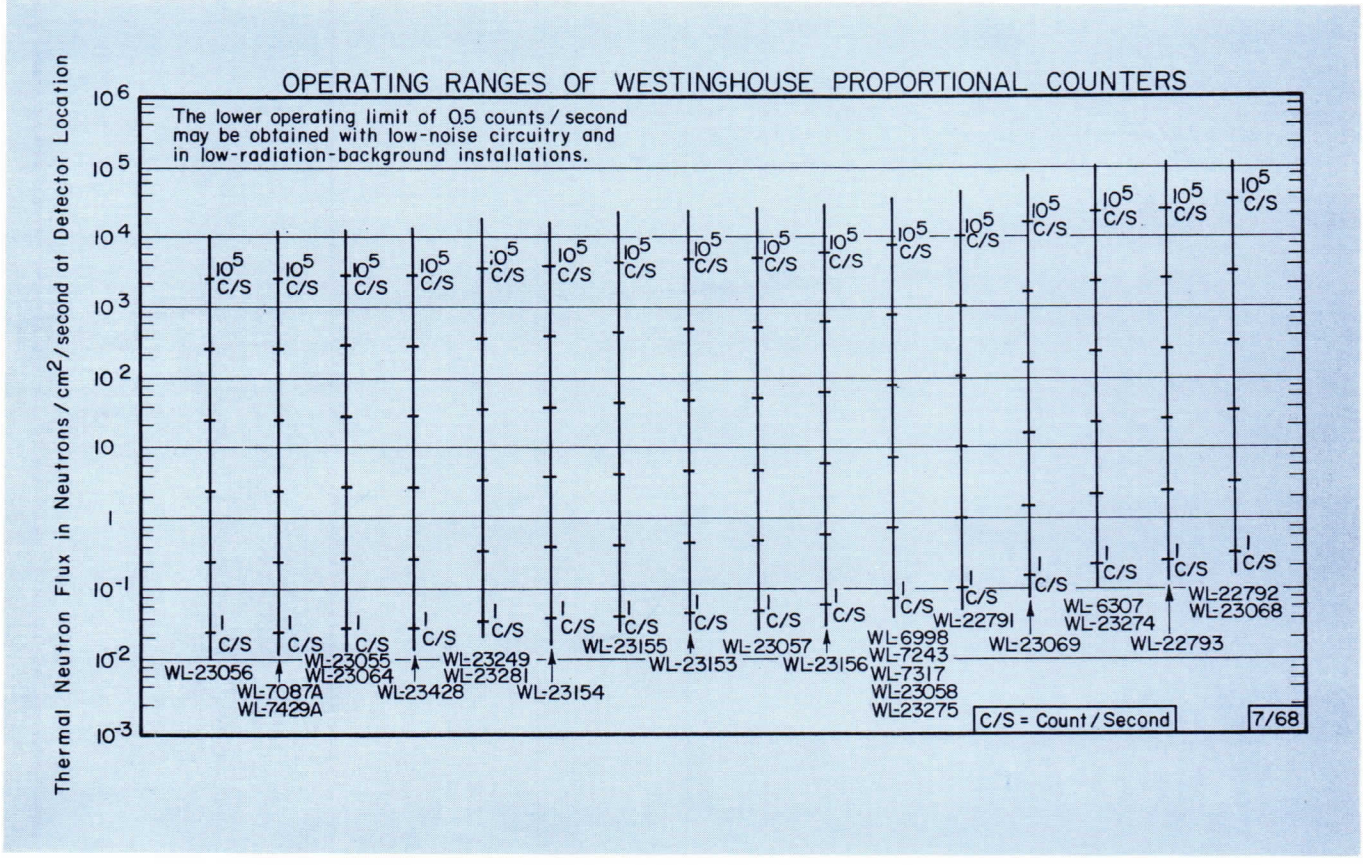

Type Number Index

Tube Type	*Pages*	*Tube Type*	*Pages*	*Tube Type*	*Pages*
WL-6307	6, 7	WL-23055	2, 3	WL-23154	4, 5
WL-6998	4, 5	WL-23056	2, 3	WL-23155	10, 11
WL-7087A	2, 3	WL-23057	6, 7	WL-23156	10, 11
WL-7243	2, 3	WL-23058	6, 7	WL-23249	8, 9
WL-7317	4, 5	WL-23064	4, 5	WL-23274	6, 7
WL-7429A	2, 3	WL-23068	8, 9	WL-23275	4, 5
WL-22791	8, 9	WL-23069	6, 7	WL-23281	8, 9
WL-22792	8, 9	WL-23153	6, 7	WL-23428	10, 11
WL-22793	8, 9				

September 1968
New Information
S6–2D–11C, S5–11A, WI–800

Application

This group of proportional counters is designed to detect neutrons of thermal and intermediate energies in the range of 1×10^{-2} to 4×10^{4} neutrons/cm^2/second. These devices are multi-element proportional counters. In the WL-7087A, WL-23056, and WL-23249 the elements are electrically insulated from the case there-by avoiding ground-loop problems in circuitry. The cables (where provided) are hermetically sealed to the case providing operation in a high humidity environment. These detectors are rugged in construction meeting Mil-S-901 for shock and Mil-Std-167 (type 1) for vibration (except WL-23056) and they will operate in any position up to rated temperatures.

Mechanical	Units	WL-7087A	WL-7429A	WL-7243	WL-23055	WL-23056
O.D. nominal	Inches	5.87	4.81	2.88	3.0	7.93 X 3.18
Length, nominal	Inches	39.62	39.62	15.44	33.0	33.50
Sensitive Length, nominal	Inches	26.0	26.0	8.62	26.0	26.0
Electrode Diameter	Inch	0.001	0.001	0.001	0.001	0.001
Cable Length	Feet	25.0	25.0	—	—	40.0
Net Weight	Pounds	36.75	34	3.12	10.0	30.0
Shipping Weight	Pounds	100.0	100.0	8.0	30.0	60.0
Materials						
Body	Aluminum	Al	Al	Al	Al	Al
Electrode	Tungsten	W	W	W	W	W
Connector	—	Brass	Brass	Mg	Mg	Brass
Insulation, electrode	—	AL_2O_3	AL_2O_3	AL_2O_3	AL_2O_3	AL_2O_3
Insulation connector	—	Rexolite	Rexolite	Rexolite	Rexolite	Teflon
Cable type	—	Coaxial	Coaxial	—	—	Triaxial
Moderator	Polyethylene	P.E.	P.E.	—	—	P.E.
Sensitive Material	—	BF_3	BF_3	BF_3	BF_3	BF_3
Gas Pressure	cm-Hg	55	55	55	55	55
Impedance						
Resistance, minimum	Ohms	10^{11}	10^{11}	10^{10}	10^{11}	10^{10}
Capacitance, approximate	pF	610	610	30	70	780
Ratings						
Voltage Between Electrodes, maximum	Volts	2500	2500	2500	2500	2500
Operating Temperature, maximum	°F	175	175	175	310	175
External Pressure, maximum	PSI	180	180	180	180	180
Thermal Neutron Flux: (note 2)						
Operating, maximum	nv	1.25×10^{4}	1.25×10^{4}	4×10^{4}	1.25×10^{4}	10^{4}
Non-operating, maximum	nv	10^{10}	10^{10}	10^{10}	10^{10}	10^{10}
Gamma Flux, maximum:						
Non-operating	R/Hr	10^{5}	10^{5}	10^{5}	10^{5}	10^{5}
Typical Operation (note 4)						
Voltage	Volts	2000	2000	2000	2000	2000
Thermal Neutron Flux Range:						
With conventional circuitry:						
Lower Limit	nv	2.5×10^{-2}	2.5×10^{-2}	7.5×10^{-2}	2.85×10^{-2}	2.2×10^{-2}
Upper Limit	nv	2.5×10^{3}	2.5×10^{3}	7.5×10^{3}	2.85×10^{3}	2.2×10^{3}
With special circuitry: (note 6)						
Lower Limit	nv	1.25×10^{-2}	1.25×10^{-2}	4×10^{-2}	1.25×10^{-2}	10^{-2}
Upper Limit	nv	1.25×10^{4}	1.25×10^{4}	4×10^{4}	1.25×10^{4}	10^{4}
Sensitivity	CPS/nv	40	40	13	35	45
Plateau:						
Length, minimum	Volts	200	200	200	200	200
Slope	%	4	4	4	4	4
Output pulse:						
Amplitude, approximate unloaded	Millivolts	7.5	7.5	60	60	60
Inherent Rise Time, average	Seconds	10^{-7}	10^{-7}	10^{-7}	10^{-7}	10^{-7}
Inherent Background (note 7)	CPS	0.25	0.25	0.4	0.20	0.25

Notes

1. The pressurizing atmosphere must be dry and non-corrosive.
2. When in flux levels exceeding the maximum operating level the high voltage should be removed, and the tube shorted through a maximum of 3 megohms.
3. Exposure to high neutron flux levels results in tritium buildup, thus increasing the background counting rate.
4. Data given are for high impedance circuitry. These characteristics will vary depending upon the associated circuitry.
5. These characteristics will vary depending upon the associated circuitry.
6. With low-noise, high resolution circuitry.
7. In radiation free areas, and with low-noise circuitry, values of the order of 4 to 6 counts per minute have been observed. High humidity environments should be avoided since they may impair performance.

Westinghouse

High Sensitivity Proportional Counters BF_3 Filled, Multi-Unit

Sensitivity	Units	Tube Type
45	CPS/nv	WL-23056
40	CPS/nv	WL-7087A
40	CPS/nv	WL-7429A
35	CPS/nv	WL-23055
13	CPS/nv	WL-7243

WL-23056

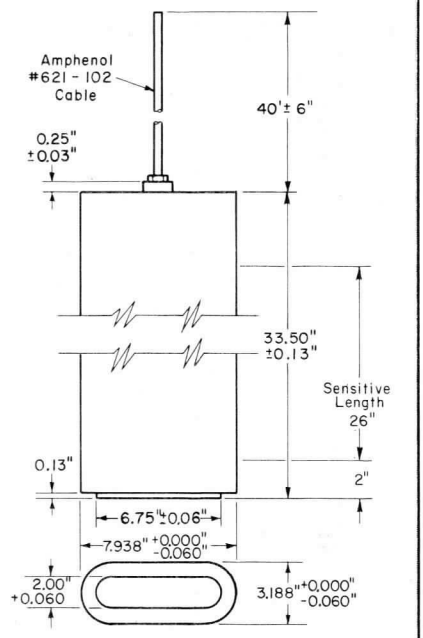

WL-7087A

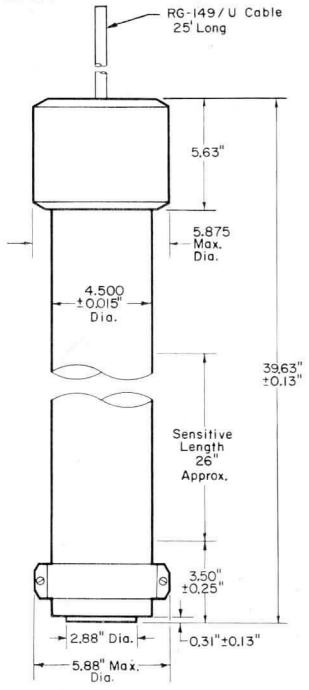

WL-7429A

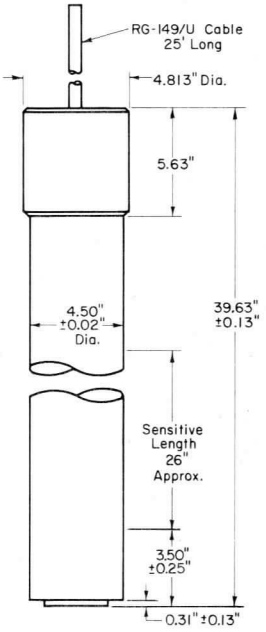

WL-23055

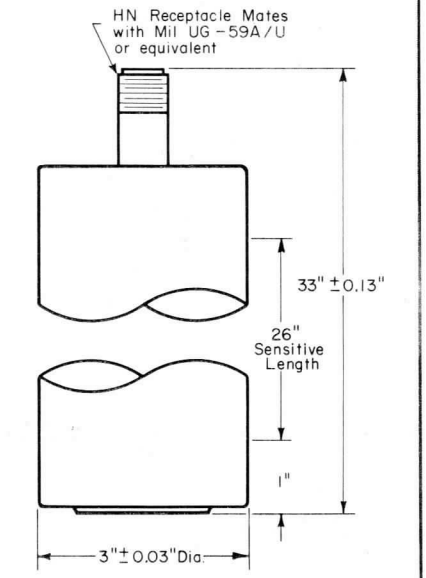

WL-7243

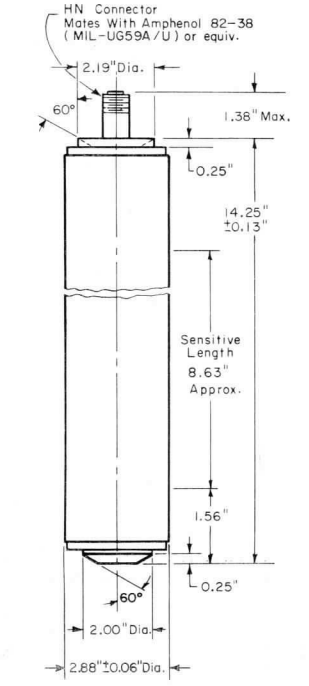

RANGE CHART

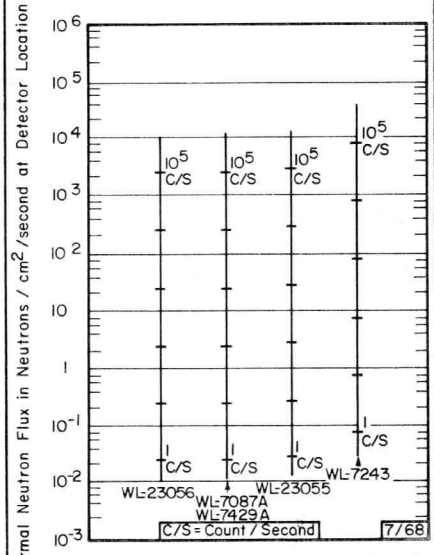

Application

This group of proportional counters is designed to detect neutrons of thermal energy in the range of 1.4×10^{-2} to 4×10^{4} neutrons/cm^2/second. These extremely rugged counters are designed to meet Mil-S-901 for shock and Mil-Std-167 (type 1) for vibration.

	Units	WL-6998	WL-7317	WL-23154	WL-23275	WL-23064
Mechanical						
O.D. nominal	Inches	1.00	1.00	1.00	1.00	2.00
Length, nominal	Inches	30.38	29.65	22.38	30.38	15.48
Sensitive Length, nominal	Inches	26.0	26.0	18.0	26.0	12.0
Electrode Diameter	Inch	0.001	0.001	0.005	0.001	0.002
Net Weight	Ounces	10.0	9.0	12.0	10.0	15
Shipping Weight	Pounds	5.0	5.0	3.0	5.0	4.0
Materials						
Body	Aluminum	EC	EC	EC	EC	Al
Electrode	Tungsten	W	W	W	W	W
Connector	Magnesium	Mg	–	Mg	Mg	Mg
Insulation, Electrode	–	AL_2O_3	AL_2O_3	AL_2O_3	AL_2O_3	AL_2O_3
Insulation, Connector	–	Rexolite	–	Rexolite	Rexolite	Rexolite
Sensitive Material	–	BF_3	BF_3	BF_3	BF_3	BF_3
Gas Pressure	cm-Hg	55	55	167	55	70
Impedance						
Resistance, minimum	Ohms	10^{11}	10^{11}	10^{11}	10^{11}	10^{12}
Capacitance, approximate	pF	20	15	15	20	10
Ratings						
Voltage Between Electrodes	Volts	2500	2500	6500	2500	3500
Operating Temperature, maximum	°F	250	250	250	250	300
External Pressure, maximum (note 1)	PSI	180	180	180	180	180
Thermal Neutron Flux:						
Operating, maximum	nv	4×10^{4}	4×10^{4}	1.7×10^{4}	4×10^{4}	1.4×10^{4}
Non-operating, maximum (note 2)	nv	10^{10}	10^{10}	10^{10}	10^{10}	10^{10}
Gamma Flux, maximum:						
Non-operating (note 2)	R/hr	10^{5}	10^{5}	10^{5}	10^{5}	10^{5}
Typical Operation (note 4)						
Voltage	Volts	2000	2000	4700	2000	2100
Thermal Neutron Flux Range:						
With conventional circuitry:						
Lower Limit	nv	7.5×10^{-2}	7.5×10^{-2}	3.3×10^{-2}	7.5×10^{-2}	2.5×10^{-2}
Upper Limit	nv	7.5×10^{3}	7.5×10^{3}	3.3×10^{3}	7.5×10^{3}	2.5×10^{3}
With special circuitry: (note 6)						
Lower Limit	nv	4×10^{-2}	4×10^{-2}	1.7×10^{-2}	4×10^{-2}	1.4×10^{-2}
Upper Limit	nv	4×10^{4}	4×10^{4}	1.7×10^{4}	4×10^{4}	1.4×10^{4}
Sensitivity	CPS/nv	13	13	30	13	35
Plateau:						
Length, minimum	Volts	200	200	200	200	300
Overall Slope, maximum	%	4	4	4	4	<2/100v
Output Pulse:						
Amplitude, approximate unloaded	Millivolts	60	60	60	60	60
Inherent Rise Time, average	Seconds	10^{-7}	10^{-7}	10^{-7}	10^{-7}	10^{-7}
Inherent Background (note 7)	CPS	0.3	0.3	0.2	0.3	0.2

Notes

1. The pressurizing atmosphere must be dry and non-corrosive.
2. When in flux levels exceeding the maximum operating level the high voltage should be removed, and the tube shorted through a maximum of 3 megohms.
3. Exposure to high neutron flux levels results in tritium buildup, thus increasing the background counting rate.
4. Data given are for high impedance circuitry. These characteristics will vary depending upon the associated circuitry.
5. These characteristics will vary depending upon the associated circuitry.
6. With low-noise, high resolution circuitry.
7. In radiation free areas, and with low-noise circuitry, values of the order of 4 to 6 counts per minute have been observed. High humidity environments should be avoided since they may impair performance.

Westinghouse

High Sensitivity Proportional Counters BF_3 Filled, Single Unit

Sensitivity	Units	Tube Type
35	CPS/nv	WL-23064
30	CPS/nv	WL-23154
13	CPS/nv	WL-6998
13	CPS/nv	WL-7317
13	CPS/nv	WL-23275

WL-23064

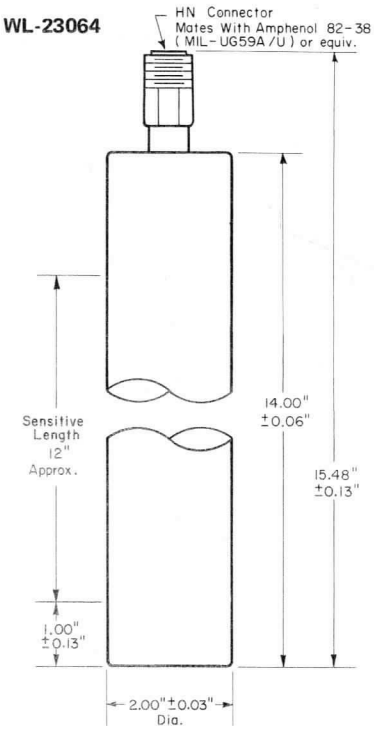

WL-23154

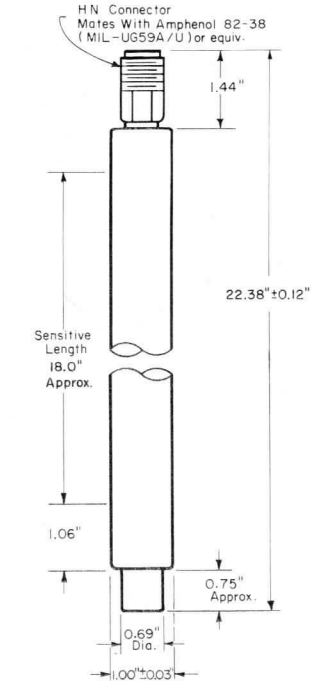

WL-6998

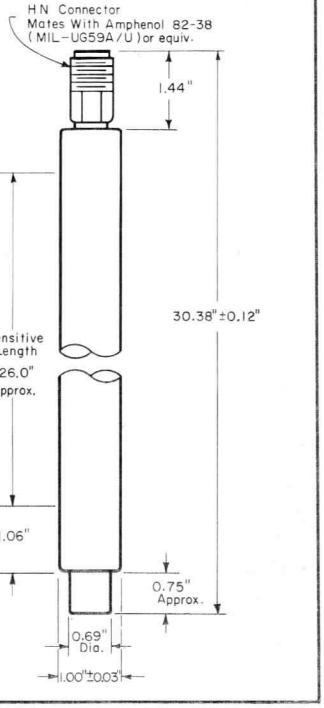

WL-7317

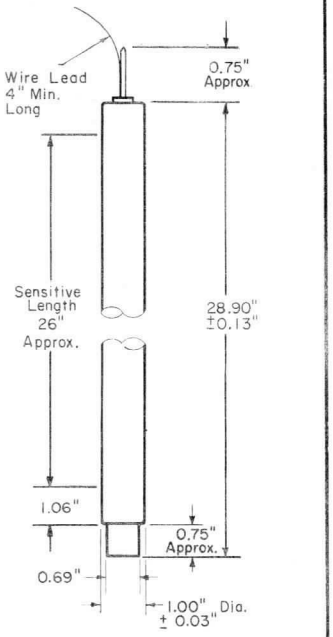

WL-23275

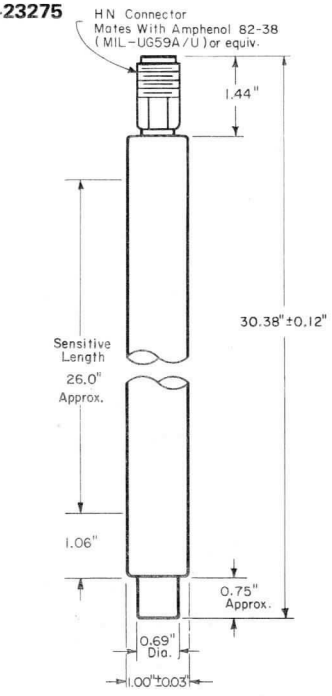

RANGE CHART

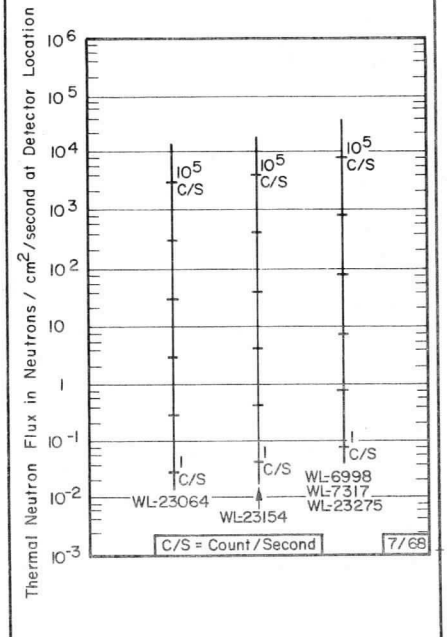

Application

This group of proportional counters is designed to detect neutrons of thermal energy in the range of 2.5×10^{-2} to 10^5 neutrons/cm^2/second. These extremely rugged counters are designed to meet Mil-S-901 for shock and Mil-Std-167 (type 1) for vibration.

Mechanical	Units	WL-6307	WL-23057	WL-23058	WL-23069	WL-23153	WL-23274
O.D. nominal	Inch	1.00	1.00	1.00	1.00	1.00	1.00
Length, nominal	Inches	12.00	15.44	12.00	15.44	15.44	12.00
Sensitive Length, nominal	Inches	8.6	12.0	8.6	12.0	12.0	8.6
Electrode Diameter	Inch	0.001	0.001	0.004	0.001	0.005	0.001
Net Weight	Ounces	6.0	8.0	6.0	8.0	8.0	6.0
Shipping Weight	Pounds	3.0	3.0	3.0	3.0	3.0	3.0
Materials							
Body	Aluminum	EC	EC	EC	EC	EC	EC
Electrode	Tungsten	W	W	W	W	W	W
Connector	Magnesium	Mg	Mg	Mg	Mg	Mg	Mg
Insulation, Electrode	–	AL_2O_3	AL_2O_3	AL_2O_3	AL_2O_3	AL_2O_3	AL_2O_3
Insulation, Connector	–	Rexolite	Rexolite	Rexolite	Rexolite	Rexolite	Rexolite
Sensitive Material	–	BF_3	BF_3	BF_3	BF_3	BF_3	BF_3
Gas Pressure	cm-Hg	55	160	160	55	167	55
Impedance							
Resistance, minimum	Ohms	10^{11}	10^{11}	10^{11}	10^{11}	10^{11}	10^{11}
Capacitance, approximate	pF	10	10	10	10	10	10
Ratings							
Voltage Between Electrodes	Volts	2500	3600	6000	2500	6500	2500
Operating Temperature, maximum	°F	250	250	250	250	250	250
External Pressure, maximum (note 1)	PSI	180	180	180	180	180	180
Thermal Neutron Flux:							
Operating, maximum	nv	10^5	2.6×10^4	4.0×10^4	7.5×10^4	2.5×10^4	10^5
Non-operating, maximum (note 2)	nv	10^{10}	10^{10}	10^{10}	10^{10}	10^{10}	10^{10}
Gamma Flux, maximum:							
Non-operating (note 2)	R/hr	10^5	10^5	10^5	10^5	10^5	10^5
Typical Operation (note 4)							
Voltage	Volts	2000	2200	4100	2000	4700	2000
Thermal Neutron Flux Range:							
With conventional circuitry:							
Lower Limit	nv	2.2×10^{-1}	5.0×10^{-2}	7.5×10^{-2}	1.5×10^{-1}	5.0×10^{-2}	2.2×10^{-1}
Upper Limit	nv	2.2×10^4	5.0×10^3	7.5×10^3	1.5×10^4	5.0×10^3	2.2×10^4
With special circuitry: (note 6)							
Lower Limit	nv	10^{-1}	2.6×10^{-2}	4.0×10^{-2}	7.5×10^{-2}	2.5×10^{-2}	10^{-1}
Upper Limit	nv	10^5	2.6×10^4	4.0×10^4	7.5×10^4	2.5×10^4	10^5
Sensitivity	CPS/nv	4.5	19	13	6.5	20	4.5
Plateau:							
Length, minimum	Volts	200	200	200	200	200	200
Slope	%	4	4	4	4	4	4
Output pulse							
Amplitude, approximate unloaded	Millivolts	60	60	60	60	60	60
Inherent Rise Time, average	Second	10^{-7}	10^{-7}	10^{-7}	10^{-7}	10^{-7}	10^{-7}
Inherent Background							
Approximate (note 7)	CPS	0.2	0.2	0.2	0.2	0.2	0.2

Notes

1. The pressurizing atmosphere must be dry and non-corrosive.
2. When in flux levels exceeding the maximum operating level the high voltage should be removed, and the tube shorted through a maximum of 3 megohms.
3. Exposure to high neutron flux levels results in tritium buildup, thus increasing the background counting rate.
4. Data given are for high impedance circuitry. These characteristics will vary depending upon the asspciated circuitry.
5. These characteristics will vary depending upon the associated circuitry.
6. With low-noise, high resolution circuitry.
7. In radiation free areas, and with low-noise circuitry, values of the order of 4 to 6 counts per minute have been observed. High humidity environments should be avoided since they may impair performance.

Westinghouse

Proportional Counters
BF_3 Filled, Single Unit, 1" O.D.

Sensitivity	Units	Tube Type
20	CPS/nv	WL-23153
19	CPS/nv	WL-23057
13	CPS-nv	WL-23058
6.5	CPS/nv	WL-23069
4.5	CPS/nv	WL-6307
4.5	CPS/nv	WL-23274

WL-23153

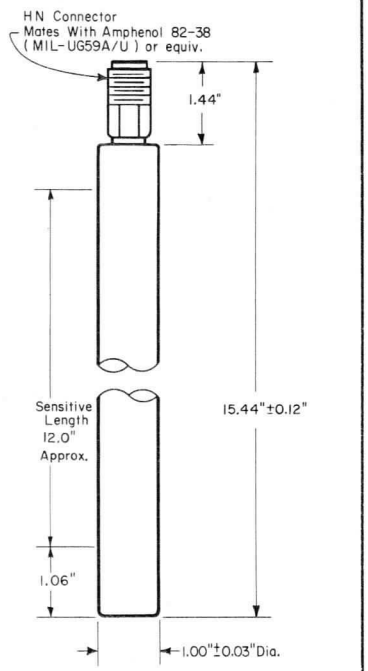

WL-23057

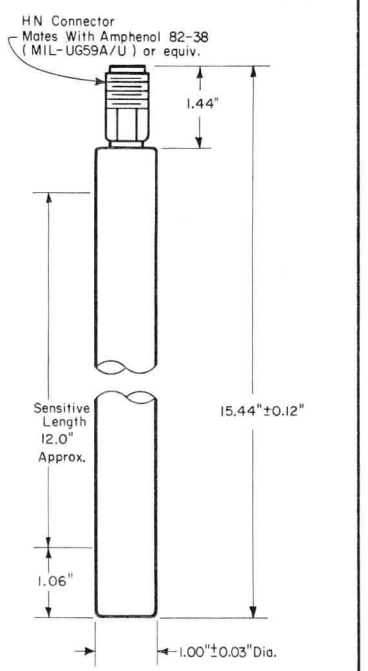

WL-23058

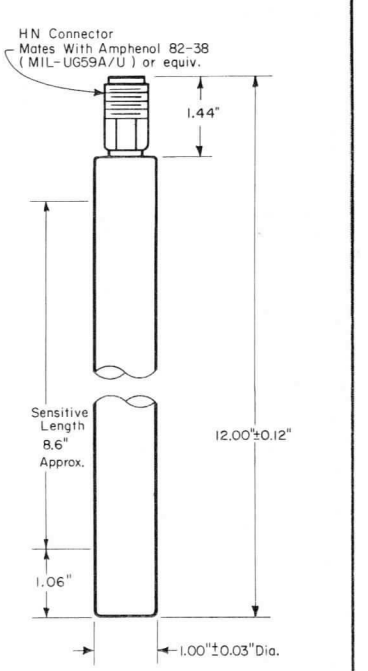

WL-23069

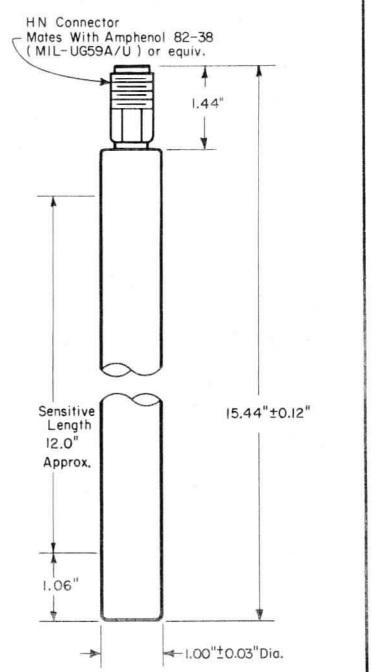

WL-6307
WL-23274

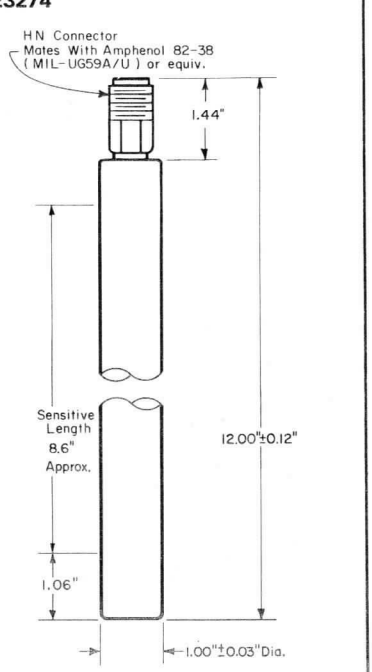

RANGE CHART

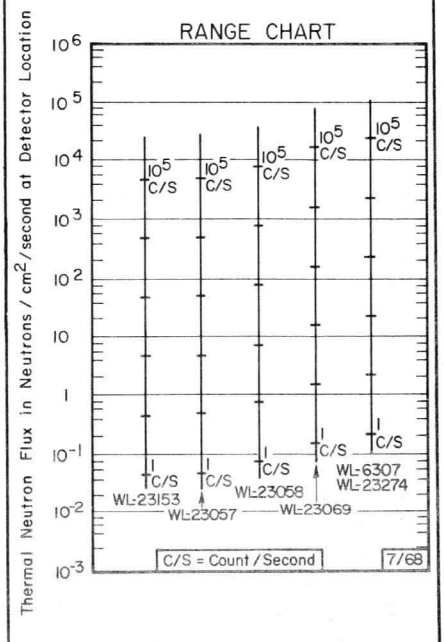

Application

This group of proportional counters is designed to detect neutrons of thermal energy in the range from 1.7×10^{-2} to 1.7×10^{5} neutrons/cm^2/second. These extremely rugged counters are designed to meet Mil-S-901 for shock and Mil-Std-167 (type 1) for vibration. The materials used in construction of the detectors have been selected for low activation properties.

Mechanical	Units	WL-22791	WL-22792	WL-22793	WL-23068	WL-23249	WL-23281
O.D. nominal	Inches	1.00	1.00	1.00	1.00	5.87	3.00
Length, nominal	Inches	30.38	12.81	14.94	12.0	39.62	33.0
Sensitive Length, nominal	Inches	26.0	8.62	10.50	8.62	26.0	26.0
Electrode Diameter	Inch	0.001	0.001	0.001	0.001	0.001	0.001
Net Weight	Pounds	0.8	0.4	0.5	0.4	36.75	10.0
Shipping Weight	Pounds	5.0	3.0	3.0	3.0	100.0	30.0
Materials							
Body	Aluminum	AL	AL	AL	TI	AL	AL
Electrode	Tungsten	W	W	W	W	W	W
Connector	–	Mg	Mg	Mg	Mg	Brass	Mg
Insulation, Electrode	–	AL_2O_3	AL_2O_3	AL_2O_3	AL_2O_3	AL_2O_3	AL_2O_3
Insulation, Connector	–	Rexolite	Rexolite	Rexolite	AL_2O_3	Rexolite	Rexolite
Sensitive Material	–	B^{10}	B^{10}	B^{10}	B^{10}	B^{10}	B^{10}
Gas Fill	–	AR-CO_2	AR-CO_2	AR-CO_2	AR-CO_2	AR-CO_2	AR-CO_2
Gas Pressure	cm-Hg	20	20	20	20	20	20
Impedance							
Resistance, minimum	Ohms	10^{12}	10^{12}	10^{12}	10^{12}	10^{11}	10^{11}
Capacitance, approximate	pF	20	12	14	12	610	70
Ratings							
Voltage Between Electrodes, maximum	Volts	1000	1000	1000	1000	1000	1000
Operating Temperature, maximum	°F	310	310	310	500	175	310
External Pressure, maximum	PSI	180	180	180	180	180	180
Thermal Neutron Flux:							
Operating, maximum	nv	5×10^{4}	1.7×10^{5}	1.25×10^{5}	1.7×10^{5}	1.7×10^{4}	1.7×10^{4}
Non-operating, maximum (note 1)	nv	5×10^{10}	10^{10}	10^{10}	10^{10}	10^{10}	10^{10}
Gamma Flux, maximum:							
Non-operating (note 1)	R/hr	10^{5}	10^{5}	10^{5}	10^{5}	10^{5}	10^{5}
Typical Operation (note 2)							
Voltage	Volts	800	800	800	800	800	800
Thermal Neutron Flux Range:							
With conventional circuitry:							
Lower Limit	nv	10^{-1}	3.3×10^{-1}	2.5×10^{-1}	3.3×10^{-1}	3.3×10^{-2}	3.3×10^{-2}
Upper Limit	nv	10^{4}	3.3×10^{4}	2.5×10^{4}	3.3×10^{4}	3.3×10^{3}	3.3×10^{3}
With special circuitry: (note 3)							
Lower Limit	nv	5.0×10^{-2}	1.7×10^{-1}	1.25×10^{-1}	1.7×10^{-1}	1.7×10^{-2}	1.7×10^{-2}
Upper Limit	nv	5.0×10^{4}	1.7×10^{5}	1.25×10^{5}	1.7×10^{5}	1.7×10^{4}	1.7×10^{4}
Sensitivity	CPS/nv	10	3	4	3	31	31
Plateau:							
Length, minimum	Volts	150	150	150	200	200	200
Slope, maximum	%/Volt	0.3	0.3	0.3	0.3	0.3	0.3
Output Pulse:							
Amplitude, approximate unloaded	Millivolts	80	80	80	80	10	80
Inherent Rise Time, average	Seconds	2.0×10^{-7}	2.0×10^{-7}	2.0×10^{-7}	2.0×10^{-7}	2.0×10^{-7}	2.0×10^{-7}
Inherent Background (note 4)	CPS	0.2	0.2	0.2	0.2	0.25	0.25

Notes

1. The pressurizing atmosphere must be dry and non-corrosive.
2. When in flux levels exceeding the maximum operating level the high voltage should be removed, and the tube shorted through a maximum of 3 megohms.
3. Exposure to high neutron flux levels results in tritium buildup, thus increasing the background counting rate.
4. Data given are for high impedance circuitry. These characteristics will vary depending upon the associated circuitry.
5. These characteristics will vary depending upon the associated circuitry.
6. With low-noise, high resolution circuitry.
7. In radiation free areas, and with low-noise circuitry, values of the order of 4 to 6 counts per minute have been observed. High humidity environments should be avoided since they may impair performance.

Westinghouse

Proportional Counters
B^{10} Lined

Sensitivity	Units	Tube Type
31	CPS/nv	WL-23249
31	CPS/nv	WL-23281
10	CPS/nv	WL-22791
4	CPS/nv	WL-22793
3	CPS/nv	WL-22792
3	CPS/nv	WL-23068

WL-23249

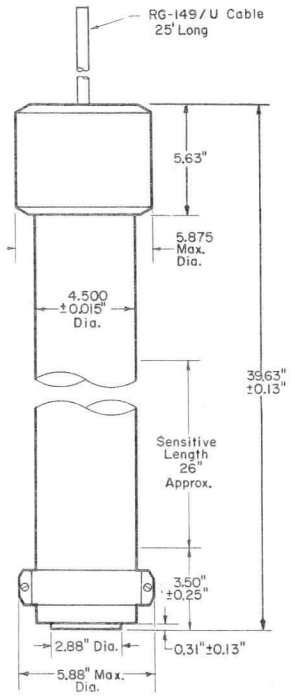

WL-23281

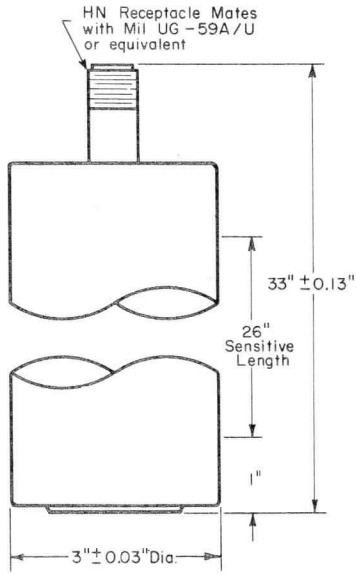

WL-22791

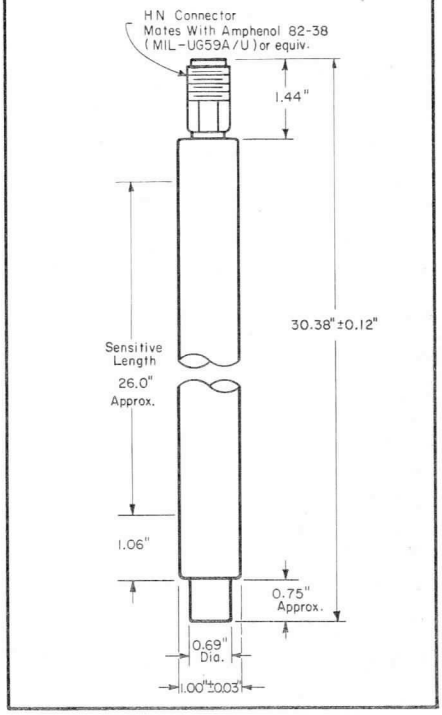

WL-22793

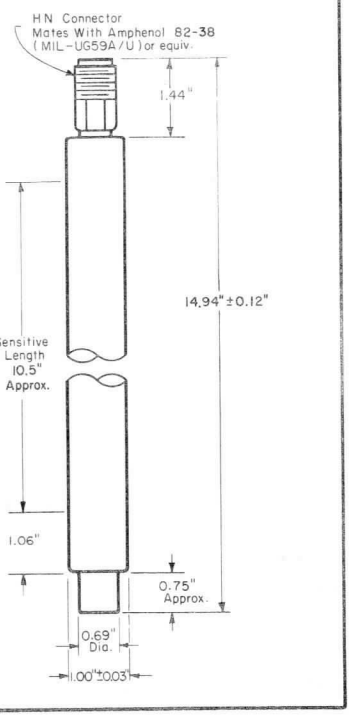

WL-22792
WL-23068

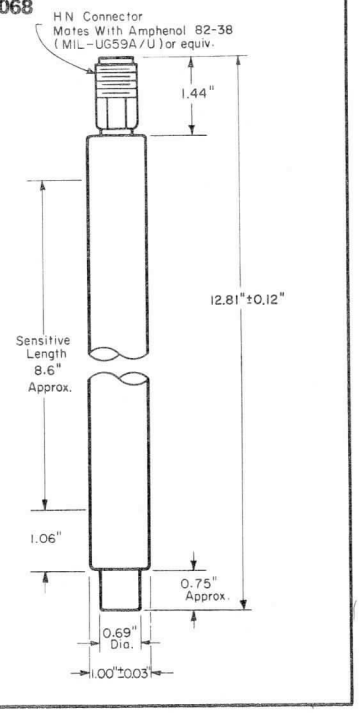

RANGE CHART

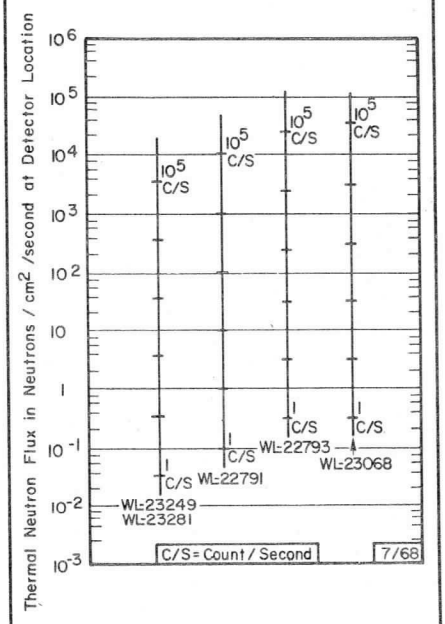

Application

This group of proportional counters is designed to detect neutrons of thermal energy in the range of 1.5×10^{-2} to 3.0×10^{4} neutrons/cm^2/second. The jitter time, important in slow neutron time-of-light studies, is approximately 10^{-6} seconds at operating voltage. They are extremely rugged and will operate in any position up to their rated temperatures.

Mechanical	Units	WL-23155	WL-23156	WL-23428
O.D. nominal	Inches	1.00	1.00	5.50 x 1.38
Length, nominal	Inches	10.38	12.0	9.0
Sensitive Length, nominal	Inches	6.0	8.62	4×6
Electrode Diameter	Inch	0.010	0.002	—
Sensitive Diameter	Inch	0.940	0.876	.005
Net Weight	Ounces	6.0	6.0	80
Shipping Weight	Pounds	3.0	3.0	10
Materials				
Body	Aluminum	EC	EC	EC
Electrode	—	W	W	Stainless Steel
Connector	Magnesium	Mg	Mg	Mg
Insulation, Electrode	—	AL_2O_3	AL_2O_3	AL_2O_3
Insulation, Connector	—	Rexolite	Rexolite	AL_2O_3
Sensitive Material	—	He^3	He^3	He^3
Gas Fill	—	He-CO_2	He-CO_2	He-CO_2
Enrichment	—	99.5%He^3	99.5%He^3	99.5%He^3
Gas Pressure	cm-Hg	760	152	608
Impedance				
Resistance, minimum	Ohms	10^{11}	10^{11}	10^{10}
Capacitance, approximate	pF	10	10	50
Ratings				
Voltage Between Electrodes	Volts	5000	1750	4000
Operating Temperature, maximum	°F	300	300	200
External Pressure, maximum (note 1)	PSI	180	180	180
Thermal Neutron Flux: (note 3)				
Operating, maximum	nv	2.5×10^{4}	3.0×10^{4}	1.5×10^{4}
Non-operating, maximum	nv	10^{10}	10^{10}	10^{10}
Gamma Flux, maximum:				
Non-operating	R/hr	10^{5}	10^{5}	10^{5}
Typical Operation (note 5)				
Voltage	VDC	4500	900	2400
Thermal Neutron Flux Range:				
With conventional circuitry:				
Lower Limit	nv	5.0×10^{-2}	6.0×10^{-2}	3.0×10^{-2}
Upper Limit	nv	5.0×10^{3}	6.0×10^{3}	3.0×10^{3}
With special circuitry:				
Lower Limit	nv	2.5×10^{-2}	3.0×10^{-2}	1.5×10^{-2}
Upper Limit	nv	2.5×10^{4}	3.0×10^{4}	1.5×10^{4}
Sensitivity	CPS/nv	22	16	33
Plateau:				
Length, minimum	Volts	200	200	200
Slope	%/Volt	0.05	0.05	0.15
Output pulse:				
Amplitude, approximate unloaded	Coulomb	2.8×10^{-13}	7.0×10^{-14}	2.8×10^{-13}
Inherent Rise Time, average	Second	3.0×10^{-6}	10^{-6}	3.0×10^{-6}
Inherent Background (note 7)	CPS	0.2	0.2	0.3
Jitter Time	Second	1.5×10^{-6}	1.6×10^{-6}	10^{-6}

Notes

1. The pressurizing atmosphere must be dry and non-corrosive.
2. When in flux levels exceeding the maximum operating level the high voltage should be removed, and the tube shorted through a maximum of 3 megohms.
3. Exposure to high neutron flux levels results in tritium buildup, thus increasing the background counting rate.
4. Data given are for high impedance circuitry. These characteristics will vary depending upon the associated circuitry.
5. These characteristics will vary depending upon the associated circuitry.
6. With low-noise, high resolution circuitry.
7. In radiation free areas, and with low-noise circuitry, values of the order of 4 to 6 counts per minute have been observed. High humidity environments should be avoided since they may impair performance.

Westinghouse

Proportional Counter
He^3 Filled

Sensitivity	Units	Tube Type
33	CPS/nv	WL-23428
22	CPS/nv	WL-23155
16	CPS/nv	WL-23156

WL-23428

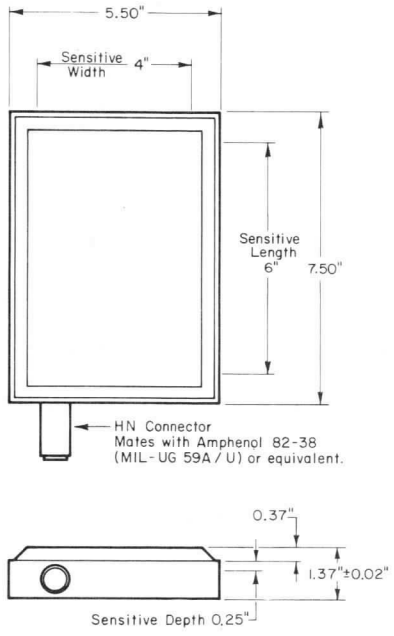

WL-23155

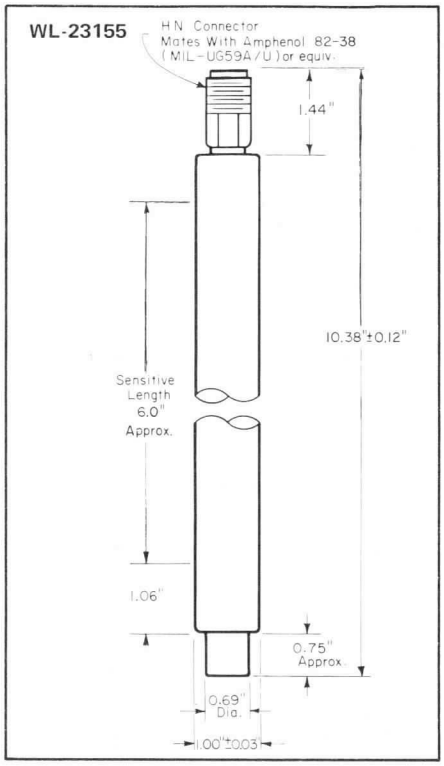

WL-23156

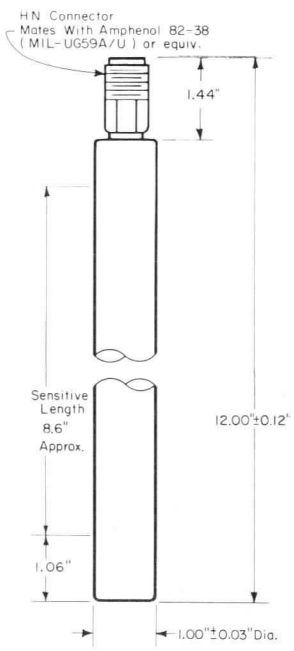

RANGE CHART

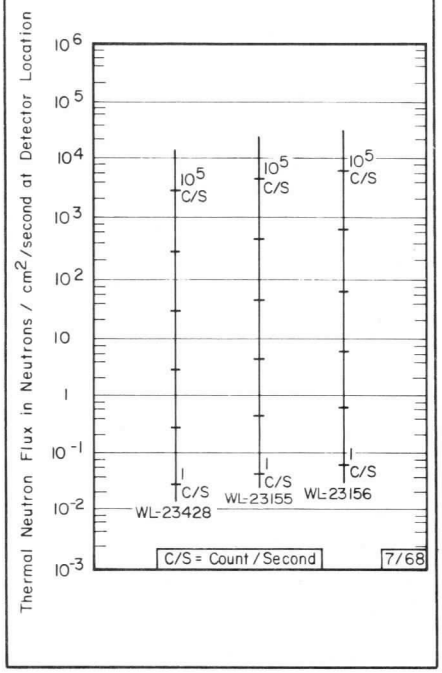

Proportional Counters

SPECIALTY PRODUCTS SALES OFFICES

STATE & CITY	ZIP CODE	ADDRESS	PHONE
ALABAMA			
Huntsville	35801	89 Holiday Office Center	(205) 881-2591
ARIZONA			
Phoenix	85004	Box 13649	(602) 254-5231
CALIFORNIA			
Compton	90224	18020 S. Santa Fe Avenue	(213) 636-0111
Los Angeles	90017	600 St. Paul Avenue	(213) 482-9660
Sunnyvale	94088	Bldg. 73, Hendy Avenue	(408) 735-2191
COLORADO			
Denver	80204	55 W. Fifth Avenue	(303) 534-8121
CONNECTICUT			
Hartford	06103	360 Market Street	(203) 249-5792
DISTRICT OF COLUMBIA			
Washington	20006	1625 K Street, N. W.	(202) 628-8843
FLORIDA			
Orlando	32814	1010 Executive Center Drive P. O. Box 20513	(305) 425-4511
GEORGIA			
Atlanta	30303	1299 Northside Drive N. W.	(404) 351-5200
ILLINOIS			
Chicago	60606	10 South Riverside Plaza	(312) 461-7040
INDIANA			
Fort Wayne	46802	Anthony Wayne Bank Bldg.	(219) 742-0221
Indianapolis	46207	1560 Stadium Drive	(317) 632-3301
MARYLAND			
Towson	21204	1055 Taylor Avenue	(301) 828-5400
MASSACHUSETTS			
Boston	02199	800 Boylston Street	(617) 542-0600
MICHIGAN			
Detroit	48232	5757 Trumbull Avenue	(313) 872-7010
Grand Rapids	49504	281 Leonard Street, N. W.	(616) 456-1531
MINNESOTA			
Minneapolis	55416	3501 S. Highway 100	(612) 927-6551
MISSOURI			
St. Louis	63101	411 N. Seventh Street	(314) 421-6911
NEW JERSEY			
E. Orange	07018	67 Evergreen Place	(201) 465-2473
NEW YORK			
Mineola	11501	1501 Franklin Avenue	(516) 248-9809
Rochester	14603	711 Exchange Street	(716) 232-4380
Syracuse	13206	4030 New Court Road	(315) 463-9581
OHIO			
Cleveland	44113	Illuminating Bldg. 55 Public Square	(216) 241-7600
Cincinnati	45237	7710 Reading Road	(513) 475-7229
Dayton	45404	1306 Farr Drive	(513) 461-3720
PENNSYLVANIA			
Bala Cynwd	19004	One Decker Square	(215) 878-1300
Pittsburgh	15230	Box 1017, Chatham Center Office Bldg.	(412) 255-3800
TEXAS			
Dallas	75247	8400 John W. Carpenter Freeway	(214) 631-2811
Houston	77002	507 Dallas Avenue	(713) 224-7791
WASHINGTON			
Seattle	98119	19 West Harrison Street	(206) 623-7001
WISCONSIN			
Milwaukee	53201	538 N. Broadway Avenue	(414) 276-1800

Westinghouse Electric Corporation
Electronic Tube Division, Elmira, N. Y. 14902
Printed in U. S. A.

FLUX MAPPING FISSION CHAMBER TYPE WL-7186

The WL-7186 is a miniature fission counter designed to detect thermal neutrons in the range from 10^3 to 10^8 neutrons/cm²/second. It consists of an active volume 0.210" in diameter and 3/8" long, with an integral radiation resistant, rigid coaxial cable approximately four feet long. The WL-7186 is rugged in construction and may be operated in any position at temperatures up to 575°F at sensitive end and 250°F at the connector end.

The sensitive coating consists of uranium oxide, highly enriched in the U-235 isotope. Thermal neutrons incident to the coating produce fission fragments which ionize the argon-nitrogen gas filling, thereby producing pulses. The pulse size and shape is comparable to that obtained with conventional fission counters, thereby permitting operation of the WL-7186 with commercially available circuitry with a gain of about 5×10^4.

The exposed portions of the chamber and integral cable are stainless steel, thereby permitting operation of the sensitive volume under water. (Note 1)

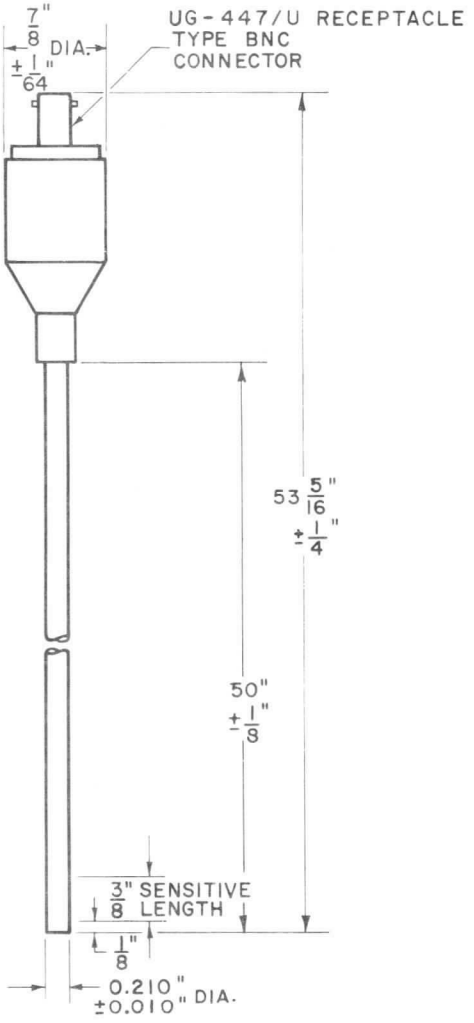

MECHANICAL

Body Diameter	0.210 ± 0.010	Inch
Head Diameter	7/8 ± 1/64	Inch
Overall Length	53-5/16 ± 1/4	Inches
Approximate Sensitive Length	3/8	Inch
Net Weight	1/2	Pound

MATERIALS

Body	Stainless Steel
Center Electrode	Stainless Steel
Insulation (Except BNC Connector)	Alumina Ceramic
Neutron Sensitive Material:	
Content	U_3O_8 Enriched to more than 90% in U-235
Total Quantity	0.00269 Grams
Gas Filling	Argon-Nitrogen Mixture

IMPEDANCE

Resistance	10^9 Ohms
Capacitance	55 pF

MAXIMUM RATINGS

Absolute Maximum Values

Voltage Between Electrodes	500 max.	Volts
Temperature:		
Sensitive End	575 max.	°F
Connector End	250 max.	°F
External Pressure (Note 2)	180 max.	Pounds/Inch²

TYPICAL OPERATION

Operating Voltage	250	Volts
Operating Voltage Plateau	250 to 500	Volts
Thermal Neutron Flux Range	10^3 nv to 10^8 nv	
Sensitivity (Note 3)	1.25×10^{-3}	CPS/nv
Output Pulse Characteristics:		
Amplitude	10^{-4}	Volts
Inherent Rise Time	2×10^{-7}	Seconds

NOTES

1. In operation of the unit partially immersed, care must be taken to keep the connector free of water.
2. If the connector end of the detector is exposed to pressure, the pressurizing atmosphere must be dry.
3. The sensitivity is a function of the setting of the pulse height selector on the associated equipment. See Figure 1.

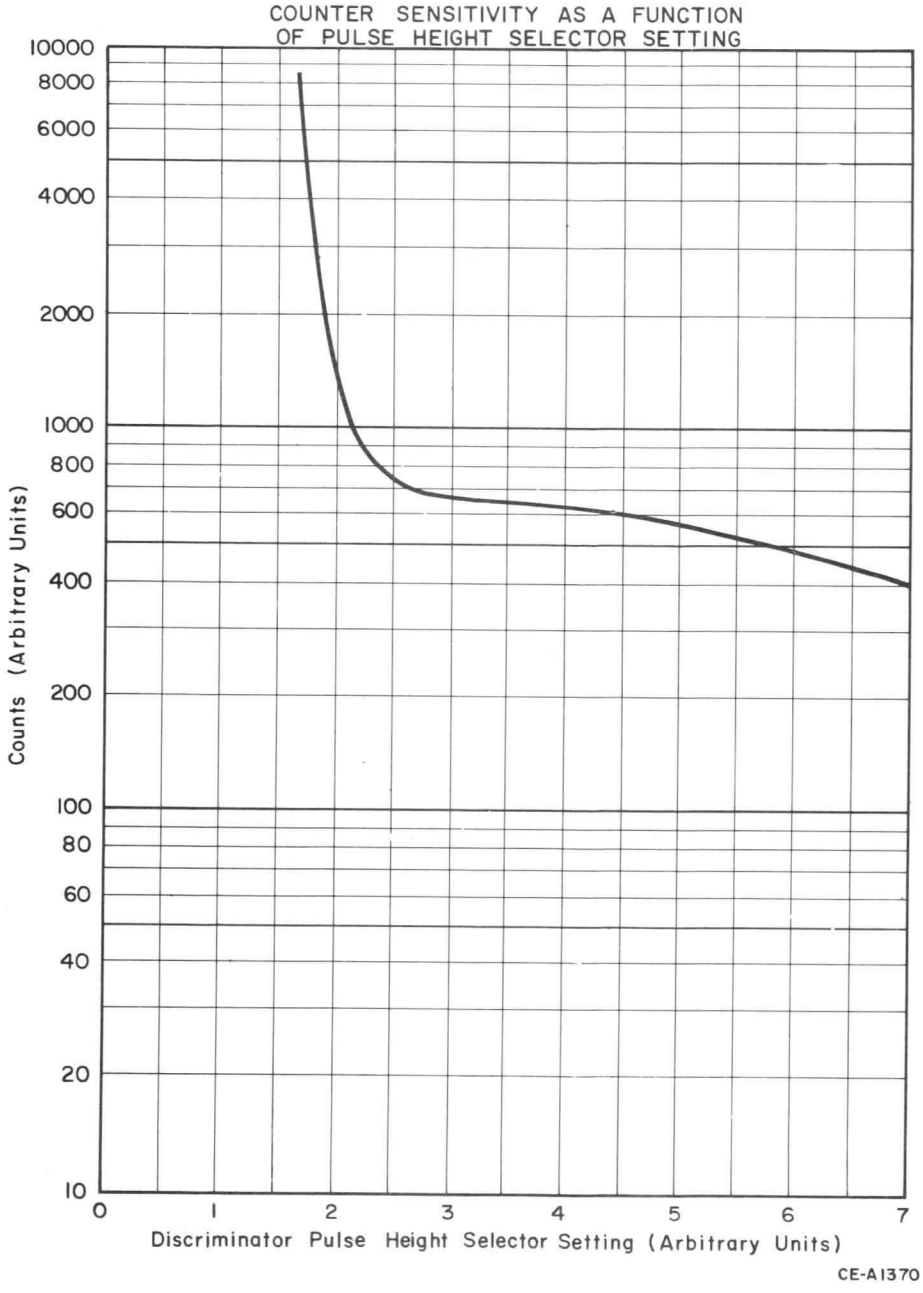

FIGURE 1

The information contained herein is supplied without assuming responsibility for infringement of patents or other rights of third parties which may result from its use. No license is granted by implication or otherwise under any patent or patent rights of Westinghouse Electric Corporation.

Westinghouse

WL-23081

August 15, 1966

VACUUM CHAMBER TYPE WL-23081

The WL-23081 is an uncompensated vacuum chamber designed to monitor pulse-type, reactor fluxes of thermal neutrons in the range from 5×10^{11} to 1×10^{18} neutrons/cm²/sec. The chamber is constructed of stainless steel with high-purity, alumina-ceramic insulation and will operate in any position at ambient temperatures up to 650 °F. The detector is provided with an integral 20-foot triaxial cable with a stainless steel jacket and alumina insulation.

The WL-23081 has a neutron sensitivity of about 2.3×10^{-18} amperes/neutron/cm²/second and a gamma sensitivity of approximately 6.6×10^{-15} amperes/roentgen/hour.

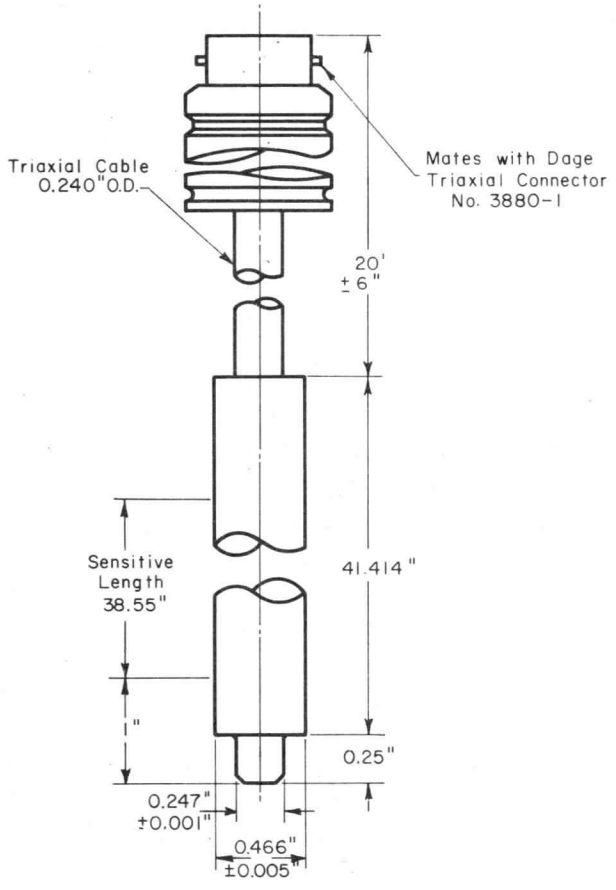

MECHANICAL

Diameter	0.466 ± 0.005	Inch
Length:		
Body (Max.)	41.68	Inches
Cable	20	Feet
Sensitive Length	38.55	Inches
Weight:		
Net (Approx.)	3	Pounds
Shipping (Approx.)	10	Pounds

MATERIALS

Outer Case	316 Stainless Steel
Electrode	304 Stainless Steel
Insulation	Alumina Ceramic
Neutron Sensitive Material	Boron Enriched in B^{10}
Gas Filling	Vacuum

IMPEDANCE (Approx.) Including Cable

Resistance: at 650 °F		
Center Conductor to Shell	10^9	Ohms
Guard Ring to Shell	10^8	Ohms
Center Conductor to Guard Ring	10^9	Ohms
Capacitance:		
Detector Only (Approx.)	120	pF
Detector and 20 ft. Cable (Approx.)	1000	pF

MAXIMUM RATINGS

Voltage	500 max.	Volts
Temperature (Ambient)	650 max.	Degrees F
External Pressure	1000 max.	Pounds/In²
Thermal Neutron Flux	1×10^{18} max.	nv
Total Integrated Neutron Flux. (for 10% loss in sensitivity)	2.75×10^{19} max.	nvt

TYPICAL OPERATION

Operating Voltage	100 to 500	Volts
Thermal Neutron Flux Range	$.5 \times 10^{11}$ to 1×10^{18}	nv
Thermal Neutron Sensitivity (Approx.)	2.3×10^{-18}	Amperes/nv
Gamma Sensitivity (Approx.)	6.6×10^{-15}	Amperes/R/Hr

PRINTED IN U.S.A. NEW INFORMATION IONIZATION CHAMBER

The information contained herein is supplied without assuming responsibility for infringement of patents or other rights of third parties which **may result from its use.** No license is granted by implication or otherwise under any patent or patent rights of Westinghouse Electric Corporation.

Westinghouse

WL-23175

August 15, 1966

COMPENSATED IONIZATION CHAMBER TYPE WL-23175

The WL-23175 is an electrically compensated ion chamber designed for operation with a fixed, applied compensating voltage. It has a thermal neutron flux range of 1×10^4 to 1.5×10^{12} neutrons/cm²/second.

The chamber is of guard-ring construction utilizing high-purity alumina ceramics throughout. The outer shell, miscellaneous support structures, and electrodes are titanium. The gas fill is nitrogen to maximize the plateau length. The WL-23175 may be operated at temperatures up to 660°F.

The thermal neutron sensitivity with a 19.5 cm nitrogen fill is 1×10^{-15} amperes nv. The uncompensated gamma sensitivity is about 2×10^{-13} amperes/R/hour.

MATERIALS

Outer Case	Titanium
Electrodes	Titanium
Insulation	Alumina
Neutron Sensitive Material:	
Content	Boron Enriched in B-10
Thickness	0.5 Mg/cm²
Gas Filling (Note 1)	Nitrogen
Fill Pressure	19.5 Cm Hg

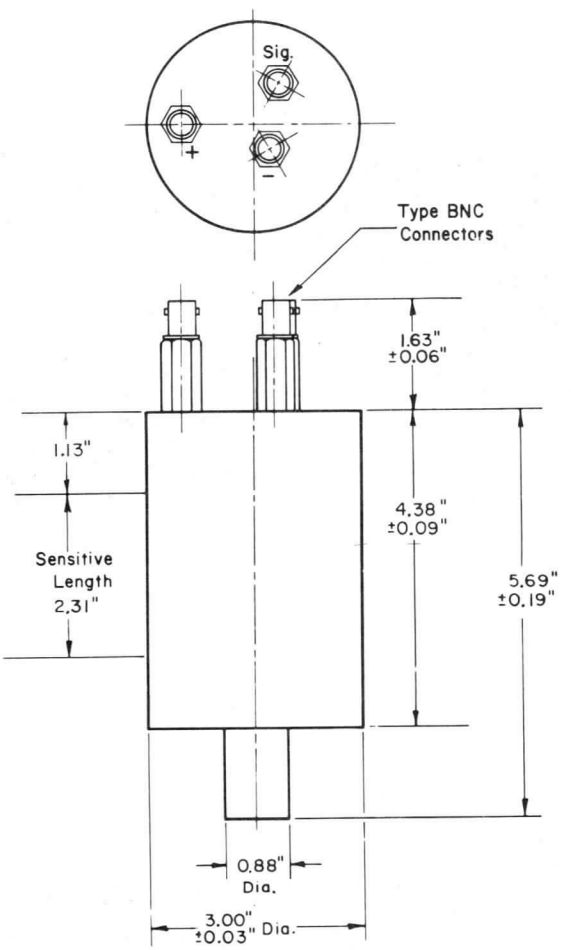

MECHANICAL

Diameter	3.00 ± 0.03	Inches
Overall Length	7.31" ± .19"	Inches
Approximate Sensitive Length	2.31	Inches
Collector Area	.75	cm²
Net Weight	3.	Pounds
Shipping Weight	.12	Pounds

IMPEDANCE

Resistance (Minimum) at 660°F:		
Signal to Case	5×10^{10}	Ohms
H.V. to Case	5×10^{9}	Ohms
Compensating to Case	5×10^{9}	Ohms
Capacitance (Approx.): (Note 2)		
Signal to Case	175	pF
H. V. to Case	135	pF
Compensating to Case	80	pF

MAXIMUM RATINGS

Voltage between Electrodes, d-c	500	Volts
Temperature	660	°F
External Pressure (Note 3)	180	PSI
Thermal Neutron Flux	1.5×10^{12}	nv
Gamma Flux	1×10^{7}	R/Hr

TYPICAL OPERATION

Operating Voltage (Note 4)	See Figure 1	
Compensating Voltage	See Figure 2	
Thermal Neutron Flux Range	10^4 to 1.5×10^{12}	nv
Thermal Neutron Sensitivity	1×10^{-15}	A/nv
Gamma Sensitivity:		
Uncompensated	2.0×10^{-13}	A/R/Hr
Compensated (95%)	1.0×10^{-14}	A/R/Hr

NOTES

1. Detectors similar to the WL-23175 but having a different gas fill for higher temperature operation and/or different fill pressure for operation at another voltage range over another flux range are also available from Westinghouse. Specific operational details will be supplied on request.
2. Capacitance is measured between an electrode and the case, with all other electrodes grounded to the case.
3. The pressurizing atmosphere must be dry and non-corrosive.
4. The saturation voltage for a saturation current density of 2×10^{-5} A/cm² of collector area is shown in Figure 1. The WL-23175 may be operated at higher current densities with a corresponding increase in saturation voltage. For additional information consult the manufacturer. For purposes of computing current density, the collector area is listed under "MECHANICAL".

WESTINGHOUSE ELECTRIC CORPORATION, ELECTRONIC TUBE DIVISION, ELMIRA, NEW YORK

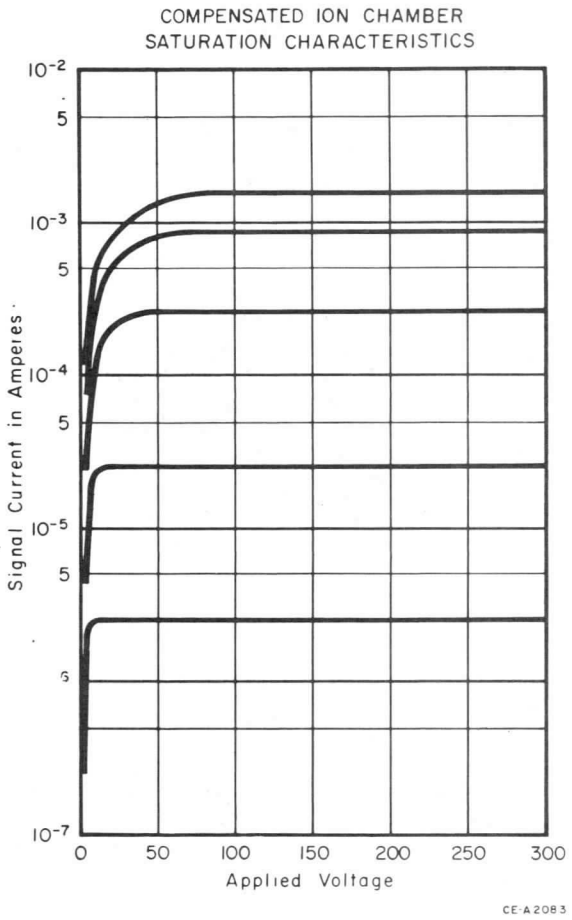

FIGURE 1

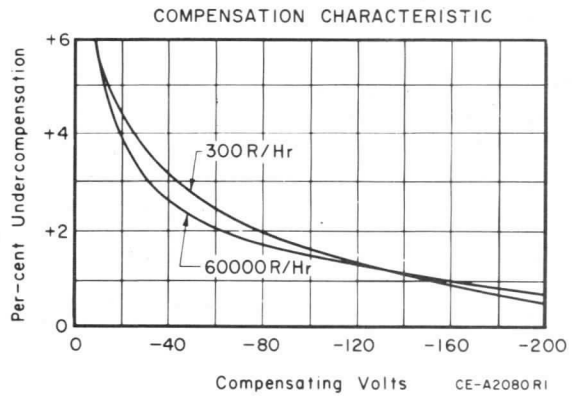

FIGURE 2

The information contained herein is supplied without assuming responsibility for infringement of patents or other rights of third parties which may result from its use. No license is granted by implication or otherwise under any patent or patent rights of Westinghouse Electric Corporation.

October 1, 1966

FLUX MAPPING FISSION COUNTER TYPE WL-23094

The WL-23094 is a miniature fission counter designed to detect thermal neutrons in the range from 10^6 to 10^{11} neutrons/cm^2/second. It consists of an active volume 0.090" in diameter and 0.34" long, with an integral semi-rigid coaxial cable approximately five feet long. The WL-23094 flux mapper is rugged in construction and may be operated in any position at temperatures up to 250°F.

The sensitive coating consists of uranium oxide, highly enriched in the U-235 isotope. Thermal neutrons incident to the coating produce fission fragments which ionize the argon-nitrogen gas filling, thereby producing pulses. The pulse size and shape is comparable to that obtained with conventional fission counters, thereby permitting operation of the device with commercially available circuitry with a gain of about 5×10^4.

The exposed portions of the chamber and integral cable are stainless steel, thereby permitting operation of the sensitive volume under water. (Note 1).

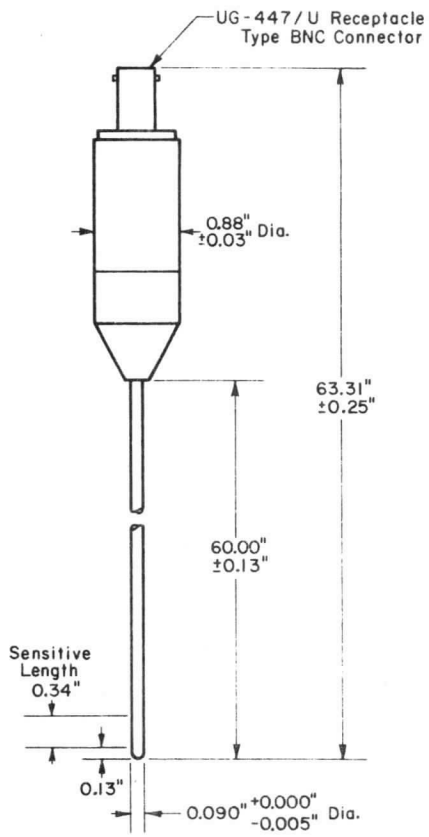

MECHANICAL		
Body Diameter	0.090 +0.000 −0.005	Inch
Head Diameter	0.88 ± 0.03	Inch
Overall Length	63.31 ± 0.25	Inches
Approximate Sensitive Length	0.34	Inch
Net Weight	0.5	Pound
MATERIALS		
Body	Stainless Steel	
Center Electrode	Stainless Steel	
Insulation:		
Detector	Teflon	
Connector	Cross-Linked Styrene (Rexolite)	
Neutron Sensitive Material:		
Content	U_3O_8 Enriched to More Than 90% in U-235	
Total Quantity	0.027 Milligrams	
Gas Filling	Argon-Nitrogen Mixture	
IMPEDANCE		
Resistance	10^9	Ohms
Capacitance	125	pF
MAXIMUM RATINGS		
Voltage Between Electrodes	200 max.	Volts
Temperature	250 max.	°F
External Pressure (Note 2)	180 max.	Pounds/Inch^2
Thermal Neutron Flux	10^{11} max.	nv
TYPICAL OPERATION		
Operating Voltage	100	Volts
Operating Voltage Plateau	100 to 200	Volts
Thermal Neutron Flux Range	10^6 to 10^{11}	nv
Sensitivity (Note 3)	1×10^{-5}	cps/nv
Output Pulse Characteristics:		
Amplitude	10^{-4}	Volts
Inherent Rise Time	2×10^{-7}	Seconds

NOTES

1. In operation of the unit partially immersed care must be taken to keep the connector free of water.
2. If the connector end of the detector is exposed to pressure, the pressurizing atmosphere must be dry.
3. The sensitivity is a function of the setting of the pulse height selector on the associated equipment.

The information contained herein is supplied without assuming responsibility for infringement of patents or other rights of third parties which may result from its use. No license is granted by implication or otherwise under any patent or patent rights of Westinghouse Electric Corporation.

NEUTRON DETECTORS

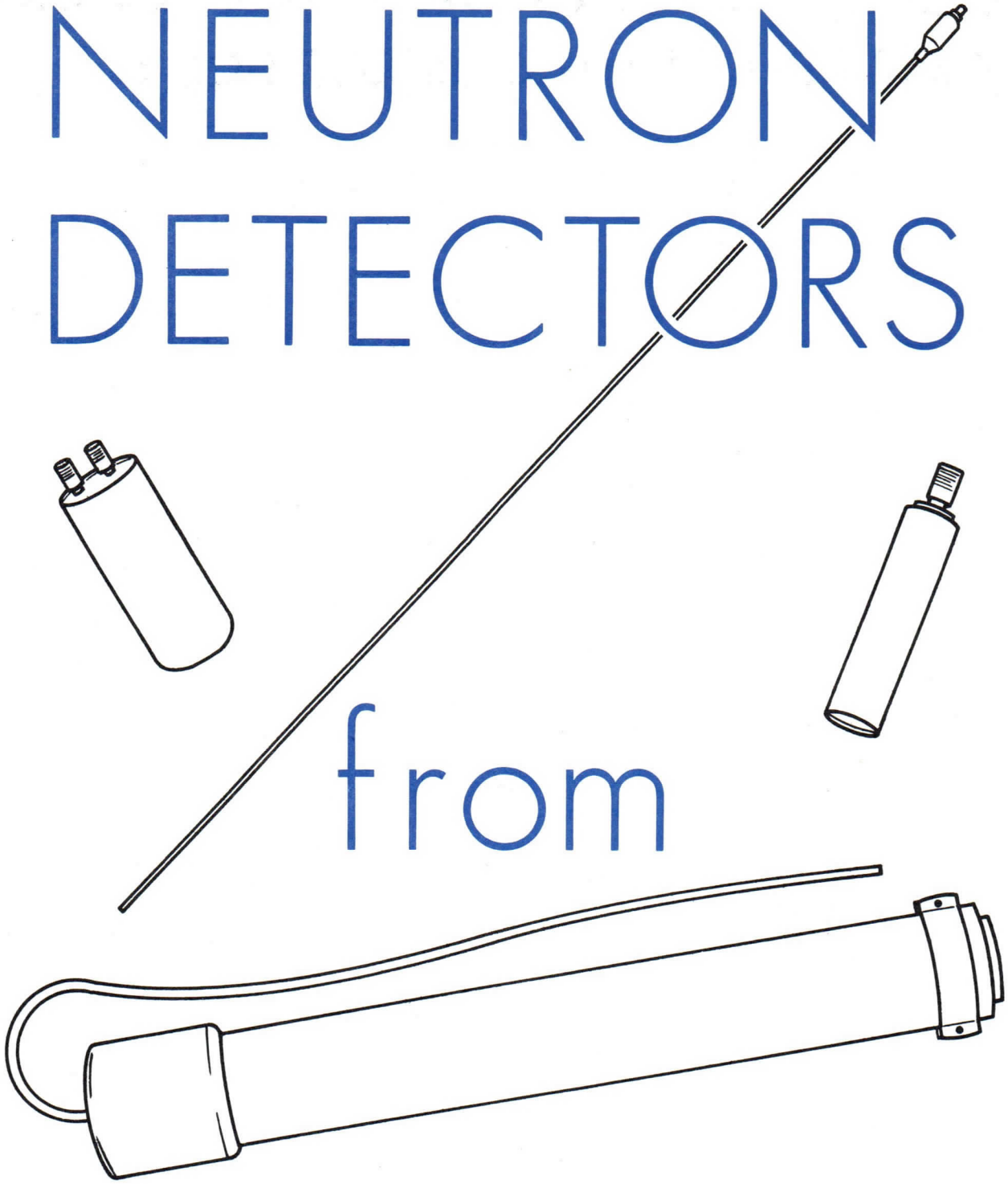

from

Westinghouse

ELECTRONIC TUBE DIVISION, ELMIRA, NEW YORK

BROADEST CHOICE OF OPERATING RATINGS AVAILABLE FROM A SINGLE SOURCE

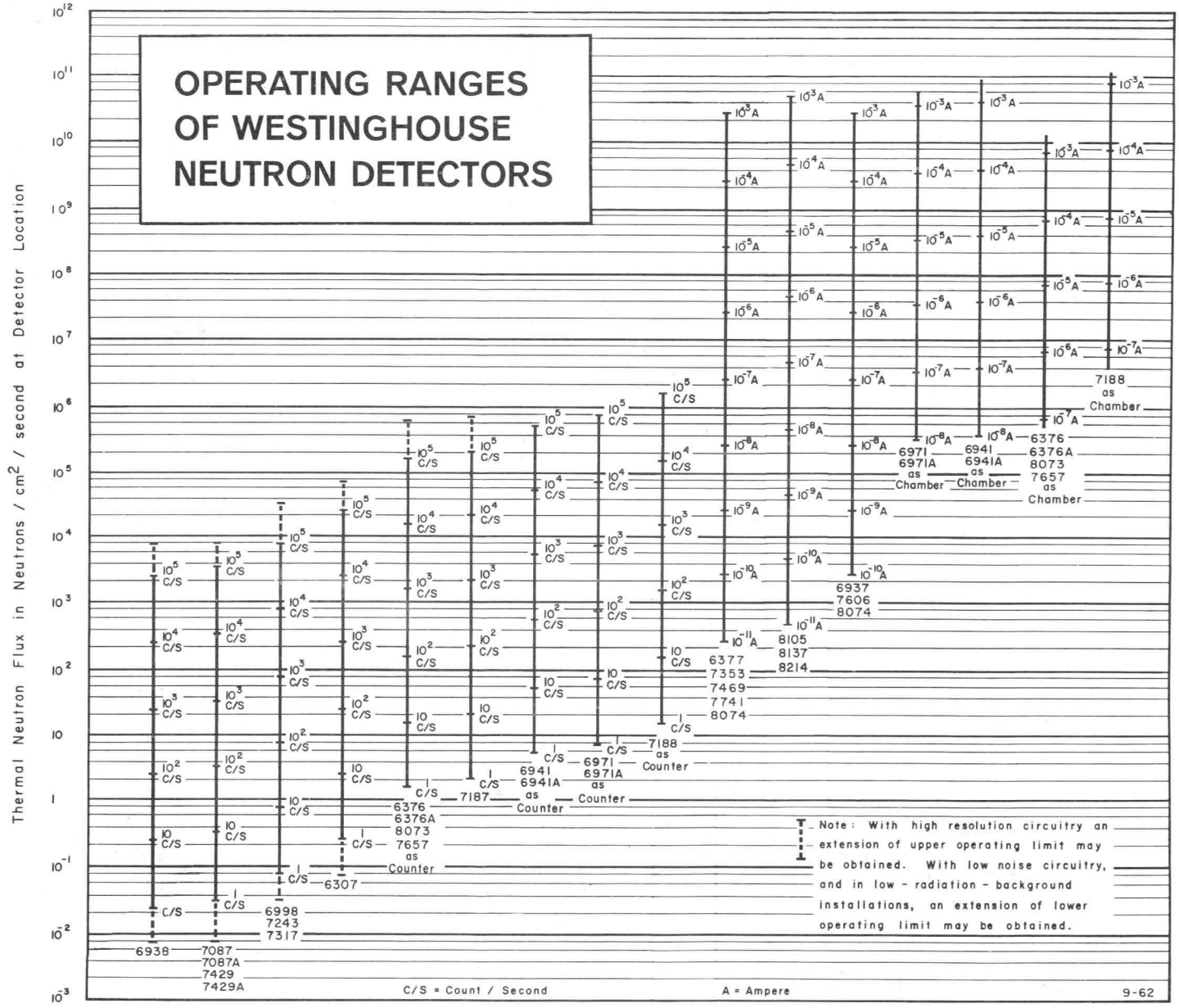

available now... for far less than you might expect

The neutron detector decade chart pictured above shows more than 75 different models in regular production at Westinghouse. Contrary to what you might suppose from these detector performance capabilities, their prices lie well within the budgetary limits of industrial reactor designs. Since most are "on-the-shelf" detectors, you can purchase now from Westinghouse.

Detector Type	Length (Inches)	Diameter (Inches)	Method of Oper.*	Neutron Sensitive Material	Type of Insulation	Max. Oper. Temp (°F)	Neutron Sensitivity (per nv)	Operating Ratings Thermal Neutron Flux (nv max.)	Operating Volts	Impedance	
										Resistance (minimum) Ohms	Capacitance pf
WL-6307	12⅛	1⅛₂	P.C.	$B^{10}F_3$	Alumina	175	4.5 Cps	10^5	2000	10^{11}	10
WL-6376A	11⅞	2³⁄₃₂	I.C./F.C.	U^{235}	Alumina	300	$1.4x10^{-13}$A.	$3x10^{10}$	300 to 800	10^9	190
WL-6377	24	3³⁄₁₆	I.C.	B^{10}	Stab. Poly.	175	$4x10^{-14}$A.	$2.5x10^{10}$	300 to 800	10^{14}	275
WL-6937A	13⅞	3³⁄₁₆	I.C.	B^{10}	Alumina	300	$4.4x10^{-14}$A.	$2.5x10^{10}$	200 to 800	10^{11}	250
WL-6938	32½	7¹⁵⁄₁₆	P.C.	$B^{10}F_3$	Alumina	175	45 Cps	10^4	2000	10^{10}	120
WL-6941A	11⅞	2³⁄₃₂	I.C./F.C.	U^{235}	Alumina	300	$2.6x10^{-14}$A.	$8.5x10^{10}$	300 to 800	10^9	180
WL-6971A	11⅞	2³⁄₃₂	I.C./F.C.	U^{235}	Alumina	300	0.14 Cps	$8.5x10^{10}$	300	10^9	190
WL-6998	30½	1⅛₂	P.C.	$B^{10}F_3$	Alumina	175	13 Cps	10^4	2000	10^{11}	20
WL-7087	39¾	5⅞	P.C.	$B^{10}F_3$	Alumina	175	40 Cps	10^4	2000	10^{11}	344
WL-7087A	39¾	5⅞	P.C.	$B^{10}F_3$	Alumina	175	40 Cps	10^4	2000	10^{11}	610
WL-7186	53⁹⁄₁₆	⅞	F.C.	U^{235}	Alumina	125	0.001 Cps	10^8	250 to 400	10^9	55
WL-7187	11⅞	2³⁄₃₂	F.C.	U^{235}	Alumina	300	0.52 Cps	$2x10^5$	300	10^9	190
WL-7188	11⅞	2³⁄₃₂	I.C./F.C.	U^{235}	Alumina	300	0.07 Cps	10^{10}	300	10^9	190
WL-7243	15¾	2¹⁵⁄₁₆	P.C.	$B^{10}F_3$	Alumina	175	13 Cps	10^4	2000	10^{10}	30
WL-7317	29¹⁵⁄₁₆	1⅛₂	P.C.	$B^{10}F_3$	Alumina	175	13 Cps	10^4	2000	10^{11}	15
WL-7353	24½	3⅝₂	I.C.	B^{10}	Stab. Poly.	175	$4x10^{-14}$A.	$2.5x10^{10}$	300 to 800	10^{14}	275
WL-7429	39¾	4¹³⁄₁₆	P.C.	$B^{10}F_3$	Alumina	175	40 Cps	10^4	2000	10^{11}	344
WL-7429A	39¾	4¹³⁄₁₆	P.C.	$B^{10}F_3$	Alumina	175	40 Cps	10^4	2000	10^{11}	610
WL-7606	13¹⁵⁄₁₆	3³⁄₁₆	I.C.	B^{10}	Alumina	500	$4.4x10^{-14}$A.	$2.5x10^{10}$	200 to 800	10^9	250
WL-7657	13¹⁵⁄₁₆	3³⁄₁₆	I.C./F.C.	U^{235}	Alumina	500	0.7 Cps	$1.4x10^5$	200 to 800	10^9	225
WL-7741	23¹³⁄₁₆	3³⁄₁₆	I.C.	B^{10}	Alumina	500	$4x10^{-14}$A.	$2x10^{10}$	300 to 800	10^{14}	315
WL-8073	11¹¹⁄₁₆	2¹⁄₁₆	I.C./F C	U^{235}	Alumina	300	0.7 Cps	$1.4x10^5$	300	10^9	190
WL-8074	23¹³⁄₁₆	3³⁄₁₆	I.C.	B^{10}	Stab. Poly.	175	$4x10^{-14}$A.	$2.5x10^{10}$	300 to 800	10^{13}	275
WL-8075	13⅞	3³⁄₁₆	I.C.	B^{10}	Alumina	300	$4.4x10^{-14}$A.	$2.5x10^{10}$	200 to 1000	10^{11}	250
WL-8105	10¾	3½	I.C.	B^{10}	Stab. Poly.	175	$2x10^{-14}$A.	$2.5x10^{10}$	300 to 800	10^{13}	130
WL-8137	10¾	3½	I.C.	B^{10}	Stab. Poly.	175	$2x10^{-14}$A.	$2.5x10^{10}$	300 to 800	10^{13}	110
WX-4344	11¹¹⁄₁₆	2¹⁄₁₆	F.C.	U^{235}	Alumina	700	0.7 Cps	$3x10^{10}$	300 to 800	10^7	190
WX-4414	13¾	3³⁄₃₂	I.C./F.C.	U^{235}	Alumina	700	0.25 Cps	$4x10^5$	300	10^7	200

DIRECTORY OF SALES OFFICES

FOR

WESTINGHOUSE ELECTRONIC COMPONENTS AND SPECIALTY PRODUCTS

NORTHEASTERN ZONE

CONNECTICUT:	119 Anne Street HARTFORD 3, Conn. Phone: (203) 246-5441
MASSACHUSETTS:	10 High Street BOSTON 10, Mass. Phone: (617) 542-0600
NEW YORK:	P. O. Box 148 JOHNSON CITY, N. Y. Phone: (607) 729-2258
	1501 Franklin Avenue MINEOLA, L. I., N. Y. Phone: (516) 248-9800
	711 Exchange Street ROCHESTER 8, N.Y. Phone: (716) 225-8900

EASTERN ZONE

ALABAMA:	89 Holiday Office Center HUNTSVILLE, Ala. Phone: (205) 881-2591
DISTRICT OF COLUMBIA:	1625 K Street, N. W. WASHINGTON 6, D. C. Phone: (202) 628-8843
FLORIDA:	367 North Orange Avenue ORLANDO, Fla. Phone: (305) 241-6597
MARYLAND:	10555 Taylor Avenue TOWSON 4, Md. Phone: (301) 828-5400
MICHIGAN:	5757 Trumbull Avenue DETROIT 32, Mich. Phone: (313) 872-7010
NEW JERSEY:	1180 Raymond Boulevard NEWARK 2, N. J. Phone: (201) 621-9000
	43 West Front Street RED BANK, N. J. Phone: (201) 747-5800
OHIO:	The Illuminating Building 55 Public Square CLEVELAND 13, Ohio Phone: (216) 241-7600
	1306 Farr Drive DAYTON, Ohio Phone: (513) 226-2511
PENNSYLVANIA:	3001 Walnut Street PHILADELPHIA 4, Pa. Phone: (215) 382-1200
	306 Fourth Avenue PITTSBURGH 30, Pa. Phone: (412) 391-2800

MID-UNITED STATES ZONE

COLORADO:	55 West Fifth Avenue DENVER 4, Colo. Phone: (303) 534-8121
ILLINOIS:	Merchandise Mart Plaza CHICAGO 54, Ill. Phone: (312) 527-3860
INDIANA:	1560 Stadium Drive INDIANAPOLIS 2, Ind. Phone: (317) 632-3301
MINNESOTA:	3501 S. Highway 100 MINNEAPOLIS 16, Minn. Phone: (612) 927-6551
MISSOURI:	411 N. Seventh Street ST. LOUIS 1, Mo. Phone: (314) 421-6911
TEXAS:	1232 Fidelity Union Life Bldg. 1511 Bryan Street DALLAS 1, Texas Phone: (214) 748-0711
	507 Dallas Avenue HOUSTON 2, Texas Phone: (713) 224-7791
WISCONSIN:	538 N. Broadway Avenue MILWAUKEE 2, Wis. Phone: (414) 276-1800

PACIFIC COAST ZONE

CALIFORNIA:	1010 S. Baldwin Avenue ARCADIA, Cal. Phone: (213) 446-4411
	P. O. Box 4847 COMPTON, Cal. Phone: (213) 631-6135
	600 St. Paul Avenue LOS ANGELES 17, Cal. Phone: (213) 482-9660
	1365 Sixth Avenue SAN DIEGO, Cal. Phone: (714) 234-4651
	Building 73, Hendy Avenue SUNNYVALE, Cal. Phone: (408) 735-2191
	15217 Burbank Boulevard VAN NUYS, Cal. Phone: (213) 782-9823
WASHINGTON:	3451 Marginal Way SEATTLE 4, Wash. Phone: (206) 622-0808

WESTINGHOUSE ELECTRIC CORPORATION
ELECTRONIC TUBE DIVISION
P. O. BOX 284
ELMIRA, N.Y.

PRINTED IN U.S.A.

ET-1436-0264-7.5 M

Westinghouse

Neutron & Radiation Detection Tubes

Radiation detection tubes are electronic devices which permit the passage of electrical current between electrodes when exposed to penetrating radiation. A variation of the intensity of radiation causes a corresponding variation in current between the electrodes. The tubes are designed to respond primarily to neutrons of thermal energies. Radiation detection tubes are of three general types: $B^{10}F_3$ (Boron Trifluoride) filled proportional counters, Uranium coated counters or ionization chambers, and B^{10} (Boron 10 Isotope) coated ionization chambers. At low levels of neutron flux, the current pulses due to the incident thermal neutrons are comparatively few in number, and therefore do not provide a steady current output. For this reason, in low flux level application, highly sensitive detector tubes, either BF_3 filled or Uranium coated are used in a pulse counting type circuit. The tube output is fed into a suitable amplifier, and pulses, proportional to the number of incident thermal neutrons, are registered on a scalar or rate meter. In applications of detector tubes in pulse counting, those pulses arising due to gamma photons which frequently accompany the neutron flux are sufficiently small that they may normally be biased out by a simple discriminator circuit. Uranium coated and B^{10} coated ionization chambers are used in higher neutron flux levels. The tubes are self-integrating, and the output, proportional to the incident thermal neutron flux, is read directly on a d-c current indicating device. The gamma photons, frequently accompanying the neutron flux, usually constitute a very small percentage at high neutron flux levels, and as such contribute insignificantly to the signal current. In applications involving a high gamma flux, however, the compensated ionization chamber may be used. This tube electrically reduces the signal due to gamma flux. This compensation is achieved by having two concentric volumes. One of these is sensitive to neutrons and gamma flux. The other is sensitive to gamma flux only. The effective gamma sensitivity of these volumes is made equal. The output signals from the volumes are combined with opposite polarity and the signals due to gamma flux cancel each other. The effectiveness of this cancellation is limited primarily by instrumentation and the reactor characteristics. In application the gamma sensitivity of this tube may thus be reduced by a factor of 100 to 1000. The lower operating limit of the compensated ion chamber is reduced still further by using a guard ring construction. With a guard ring construction, leakage currents, through the insulators due to the applied voltages, flow to ground and not through the signal circuit. Radiation detection tubes are used as laboratory instruments in atomic and nuclear radiation investigations, in the control of reactors, and in health monitoring for personnel protection.

TUBE RANGE CHART **INSTRUMENTATION RANGES**

TYPICAL NUCLEAR INSTRUMENTATION RANGES IN TERMS OF PER CENT REACTOR POWER

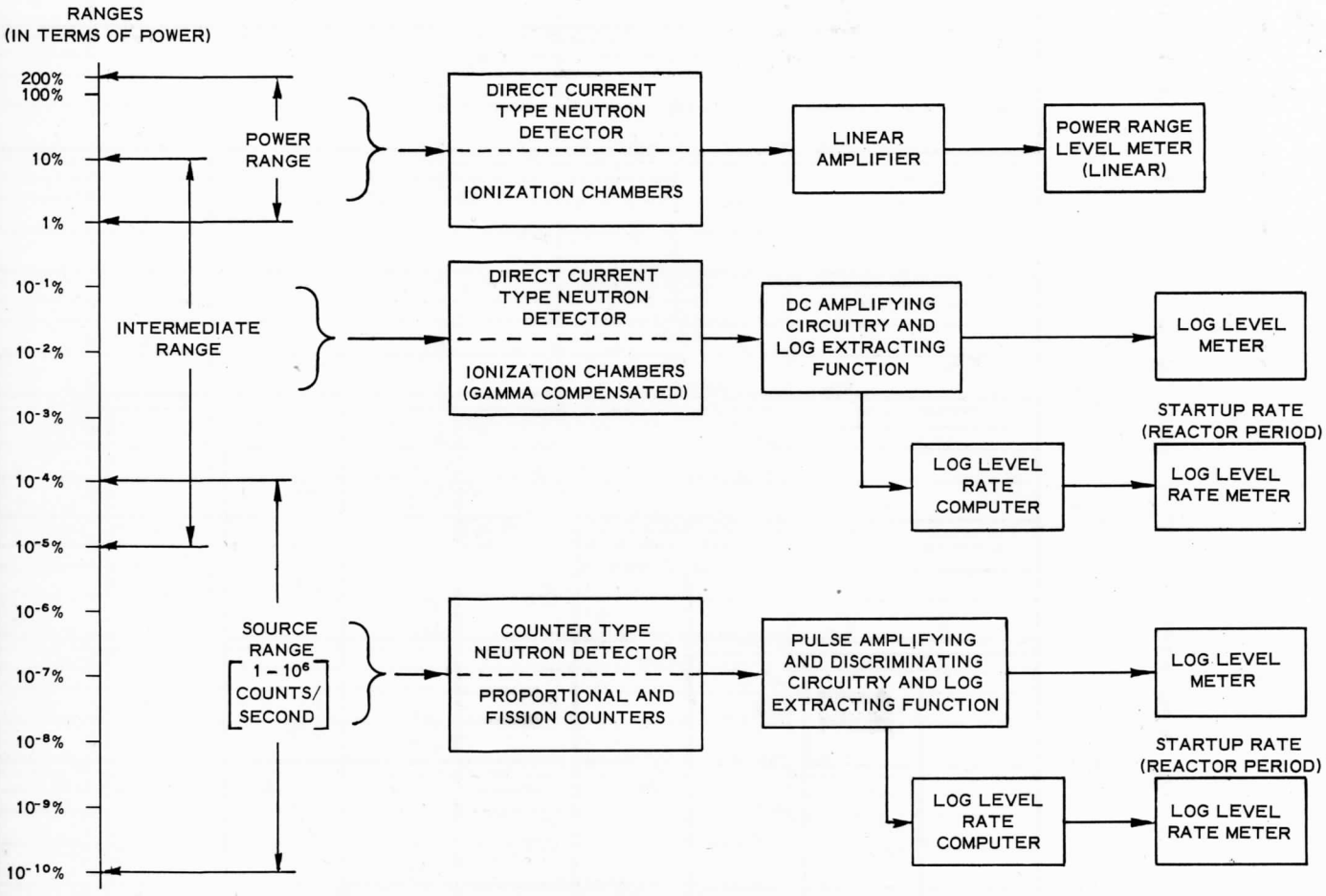

OPERATING RANGES OF WESTINGHOUSE NEUTRON DETECTORS

Thermal Neutron Flux in Neutrons / cm² / second at Detector Location

10^{12} 10^{11} 10^{10} 10^{9} 10^{8} 10^{7} 10^{6} 10^{5} 10^{4} 10^{3} 10^{2} 10 1 10^{-1} 10^{-2} 10^{-3}

6938 — 10^{5} C/S — 10^{4} C/S — 10^{3} C/S — 10^{2} C/S — 10 C/S — 1 C/S

7087 / 7087A / 7429 / 7429A — 10^{5} C/S — 10^{4} C/S — 10^{3} C/S — 10^{2} C/S — 10 C/S — 1 C/S

6998 / 7243 / 7317 — 10^{5} C/S — 10^{4} C/S — 10^{3} C/S — 10^{2} C/S — 10 C/S — 1 C/S

6307 — 10^{5} C/S — 10^{4} C/S — 10^{3} C/S — 10^{2} C/S — 10 C/S — 1 C/S

6376 / 6376A as Counter — 10^{5} C/S — 10^{4} C/S — 10^{3} C/S — 10^{2} C/S — 10 C/S — 1 C/S

7187 — 10^{5} C/S — 10^{4} C/S — 10^{3} C/S — 10^{2} C/S — 10 C/S — 1 C/S

6941 / 6941A as Counter — 10^{5} C/S — 10^{4} C/S — 10^{3} C/S — 10^{2} C/S — 10 C/S — 1 C/S

6971 / 6971A as Counter — 10^{5} C/S — 10^{4} C/S — 10^{3} C/S — 10^{2} C/S — 10 C/S — 1 C/S

7188 as Counter — 10^{5} C/S — 10^{4} C/S — 10^{3} C/S — 10^{2} C/S — 10 C/S — 1 C/S

6937 / 7606 — 10^{-9}A — 10^{-10}A

6377 / 7353 / 7469 / 7741 — 10^{-9}A — 10^{-10}A — 10^{-11}A

6971 / 6971A as Chamber — 10^{-3}A — 10^{-4}A — 10^{-5}A — 10^{-6}A — 10^{-7}A — 10^{-8}A

6941 / 6941A as Chamber — 10^{-3}A — 10^{-4}A — 10^{-5}A — 10^{-6}A — 10^{-7}A — 10^{-8}A

6376 / 6376A as Chamber — 10^{-3}A — 10^{-4}A — 10^{-5}A — 10^{-6}A — 10^{-7}A — 10^{-8}A

7188 as Chamber — 10^{-3}A — 10^{-4}A — 10^{-5}A — 10^{-6}A — 10^{-7}A

Note: With high resolution circuitry an extension of upper operating limit may be obtained. With low noise circuitry, and in low - radiation - background installations, an extension of lower operating limit may be obtained.

C/S = Count / Second A = Ampere 11-15-60

March 1, 1960

BF_3 PROPORTIONAL COUNTER TYPE 6307

The 6307 proportional counter is designed to detect neutrons of thermal energy in the range from 10^{-1} to 10^5 neutrons/cm^2/second. This counter is extremely rugged, meeting military specification MIL-S-901 for shock and MIL-Std-167(type 1) for vibration, and will operate in any position at temperatures up to 250°F.

The materials used in the construction of the detector, including the connector, have been selected for low activation properties, thereby facilitating handling after exposure to neutron fluxes. The thermal neutron sensitivity of the 6307 is approximately 4.5 counts/neutron/cm^2 at an operating voltage of 2000 volts.

MECHANICAL:

Maximum Diameter	1-1/32	Inches
Maximum Overall Length	12-1/8	Inches
Approximate Sensitive Length	8-5/8	Inches
Net Weight	6	Ounces
Shipping Weight	3	Pounds

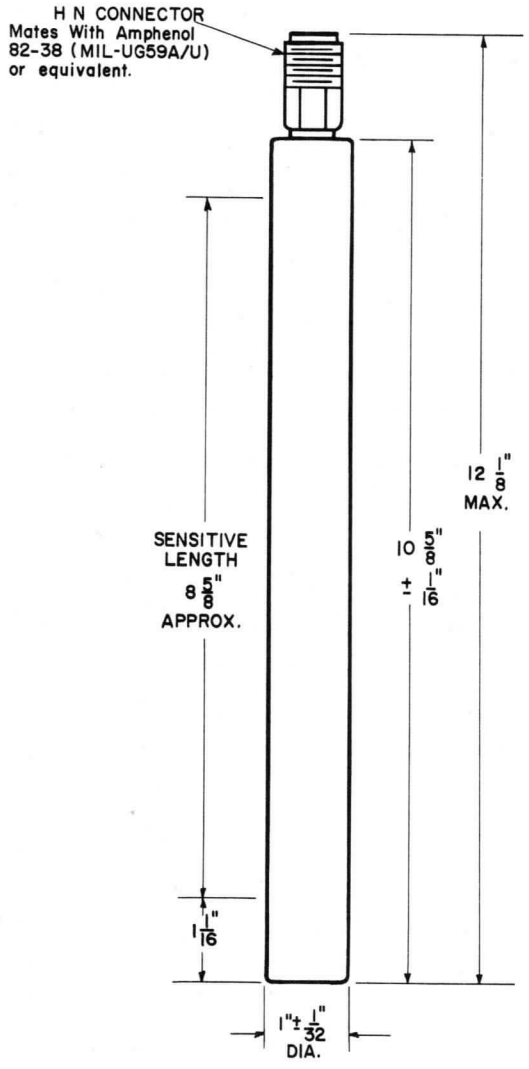

MATERIALS:

Body	EC Grade Aluminum
Electrode	0.001 Inch Dia. Tungsten
Connector	Magnesium
Insulation:	
Electrode Supports	Alumina Ceramic
Connector	Polystyrene
Neutron Sensitive Material:	
Content	Boron trifluoride enriched to 96% in Boron -10
Pressure	55 Cm of Hg

IMPEDANCE:

Resistance (minimum)	10^{11}	Ohms
Capacitance (approx.)	10	$\mu\mu f$

MAXIMUM RATINGS:

Voltage Between Electrodes	2500	Volts
Temperature	250	Degrees F
External Pressure (Note 3)	180	Pounds/$Inch^2$
Operating:		
Thermal Neutron Flux	10^5	nv
Non-Operating:		
Thermal Neutron Flux (Note 1)	10^{10}	nv
Gamma Flux (Note 1)	10^5	R/hr

TYPICAL OPERATION: (Note 2)

Operating Voltage	2000	Volts
Thermal Neutron Flux Range:		
With Conventional Circuitry	2.2×10^{-1} to 2.2×10^4	nv
With Special Circuitry (Note 4)	10^{-1} to 10^5	nv
Sensitivity	4.5	CPS/nv
Plateau Characteristics:		
Length (minimum)	200	Volts
Overall Slope (maximum)	4	Per-cent
Output Pulse Characteristics:		
Amplitude (approx. unloaded)	60	Millivolts
Inherent Rise Time (Average)	10^{-7}	Seconds
Inherent Background (Note 5) (approx.)	0.2	Counts/Second

1. When in flux levels exceeding the maximum operating level the high voltage should be removed, and the tube shorted through a maximum of 3 megohms.
2. These characteristics will vary depending upon the associated circuitry. For application details see the section entitled "Proportional Counter Operation".
3. The pressurizing atmosphere must be dry and non-corrosive.
4. With low-noise, high resolution circuitry.
5. In radiation free areas, and with low-noise circuitry, values of the order of 4 to 6 counts per minute have been observed. High humidity environments should be avoided since they may impair performance.

Westinghouse®

6376
6376A

March 15, 1960

DUAL RANGE FISSION CHAMBER TYPES 6376 AND 6376A

The 6376 fisson chamber is designed to detect thermal neutrons in the range of 1.4 to 1.4×10^5 neutrons/cm^2/second when operated as a counter, and in the range of 5×10^5 to 1.4×10^{10} neutrons/cm^2/second when operated as a chamber. The detector is extremely rugged in construction, meeting MIL-S-901 for shock and MIL-STD-167 (type1) for vibration, and may be operated in any position at temperatures up to 175°F. The 6376A is identical to the 6376 except being rated to 300°F.

The 6376 is constructed of aluminum, with high purity alumina ceramic insulators throughout, including those used in the type HN coaxial connector. In typical operation as a fission counter the 6376 has a thermal neutron sensitivity of approximately 0.7 counts/neutron/cm^2 throughout a wide range of applied voltage. When connected for service as an ionization chamber, the thermal neutron sensitivity is approximately 1.4×10^{-13} amperes/neutron/cm^2/second with a gamma sensitivity of approximately 4.2×10^{-11} amperes/R/Hour.

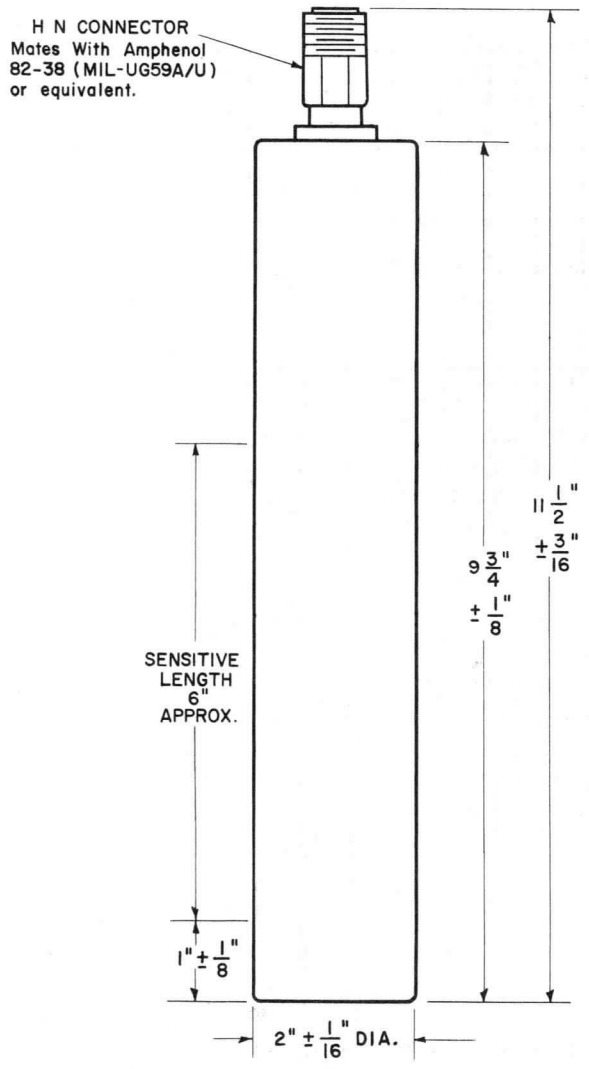

MECHANICAL:		
Maximum Diameter	2-1/16	Inches
Maximum Overall Length	11-11/16	Inches
Approximate Sensitive Length	6	Inches
Net Weight	1-3/4	Pounds
Shipping Weight	12	Pounds
MATERIALS:		
Outer Case		Aluminum
Electrodes		Aluminum
Insulation		Alumina Ceramic
Neutron Sensitive Material:		
Content	U_3O_8 Enriched to more than 90% in U-235	
Thickness		2 mg/cm^2
Total Quantity		1.72 Grams
Gas Filling		Argon-Nitrogen Mixture
Gas Pressure		76 cm of Hg
IMPEDANCE:		
Resistance (minimum)	10^9	Ohms
Capacitance	190	$\mu\mu f$
MAXIMUM RATINGS:		
Voltage Between Electrodes	1000	Volts
Temperature:		
6376	175	Degrees F
6376A	300	Degrees F
External Pressure (Note 2)	180	Pounds/$Inch^2$
Thermal Neutron Flux	3×10^{10}	nv

TYPICAL OPERATION AS A COUNTER: (Note 1)		
Operating Voltage	300	Volts
Operating Voltage Plateau (See Figure 2)	200 to 800	Volts
Thermal Neutron Flux Range	1.4 to 1.4×10^5	nv
Sensitivity (Note 1)	0.7	CPS/nv
Output Pulse Characteristics:		
Amplitude (unloaded)	2×10^{-4}	Volts
Inherent Rise Time (average)	2×10^{-7}	Seconds
TYPICAL OPERATION AS A CHAMBER:		
Operating Voltage (Note 3)	300 to 1000	Volts
Saturation Characteristics:	See Figure 3	
Thermal Neutron Flux Range (Note 4)	5×10^5 to 1.4×10^{10}	nv
Thermal Neutron Sensitivity	1.4×10^{-13}	Amperes/nv
Gamma Sensitivity	4.2×10^{-11}	Amperes/R/hour

1. The sensitivity is 0.7 counts/neutron/cm^2 when the alpha background counting rate of the naturally radioactive uranium is adjusted to 5 counts/second. By varying the pulse height selector on the associated circuitry other sensitivities are available. See Figure 1 and the section entitled "Fission Counter Operation".
2. The pressurizing atmosphere must be dry and non-corrosive.
3. The minimum voltage required for saturation is dependent upon the incident neutron flux level. See Figure 3.
4. The lower limit of operating range is determined by an inherent alpha background current of approximately 1.6×10^{-8} amperes.

COUNTER SENSITIVITY AS FUNCTION OF PULSE HEIGHT SETTING

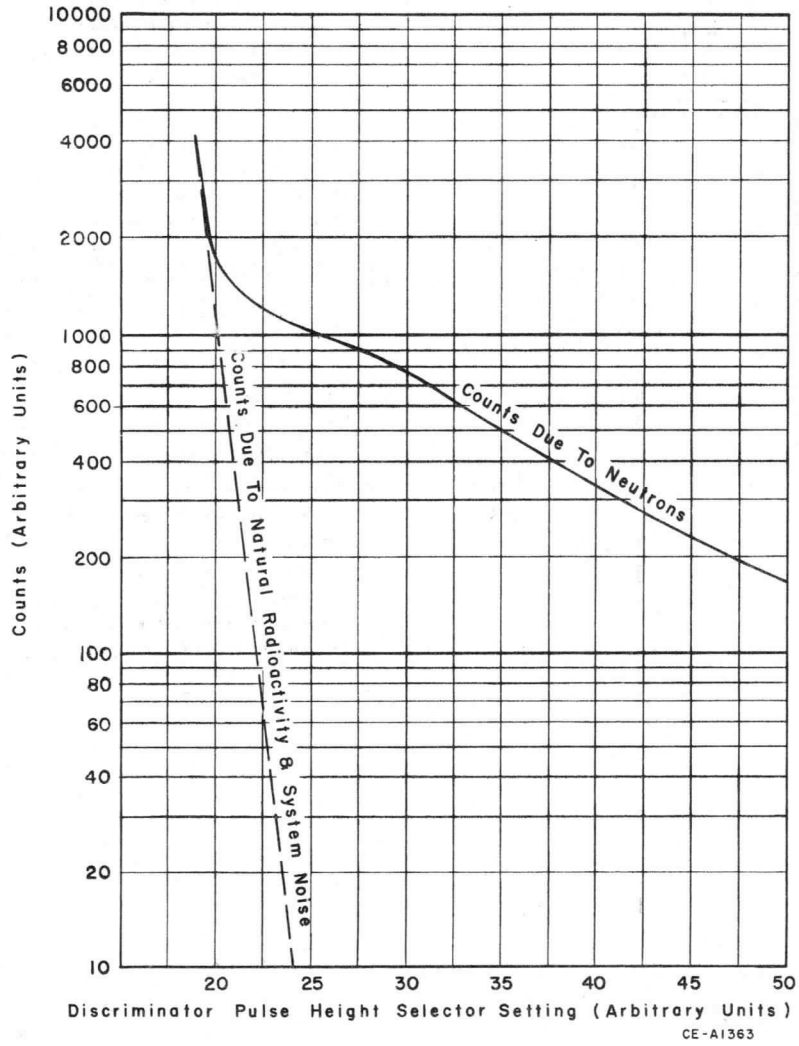

FIGURE 1

COUNTING RATE CHARACTERISTIC

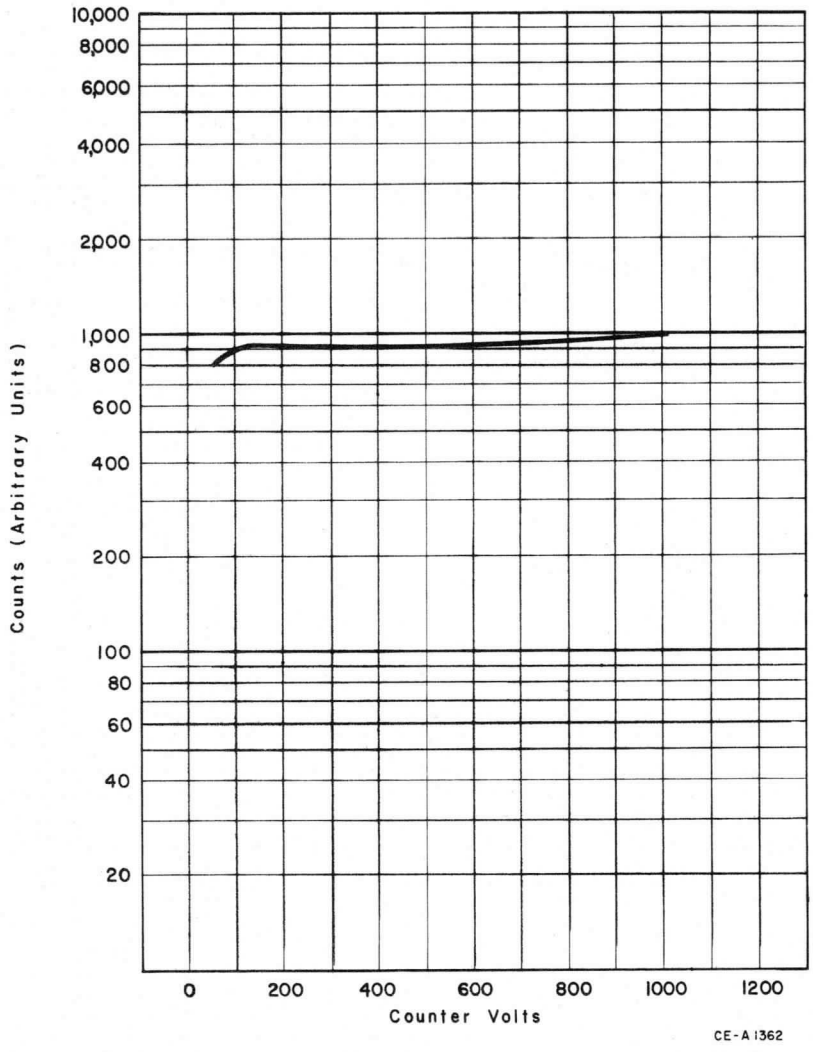

FIGURE 2

TYPICAL SATURATION CHARACTERISTICS
Ion Chamber Operation

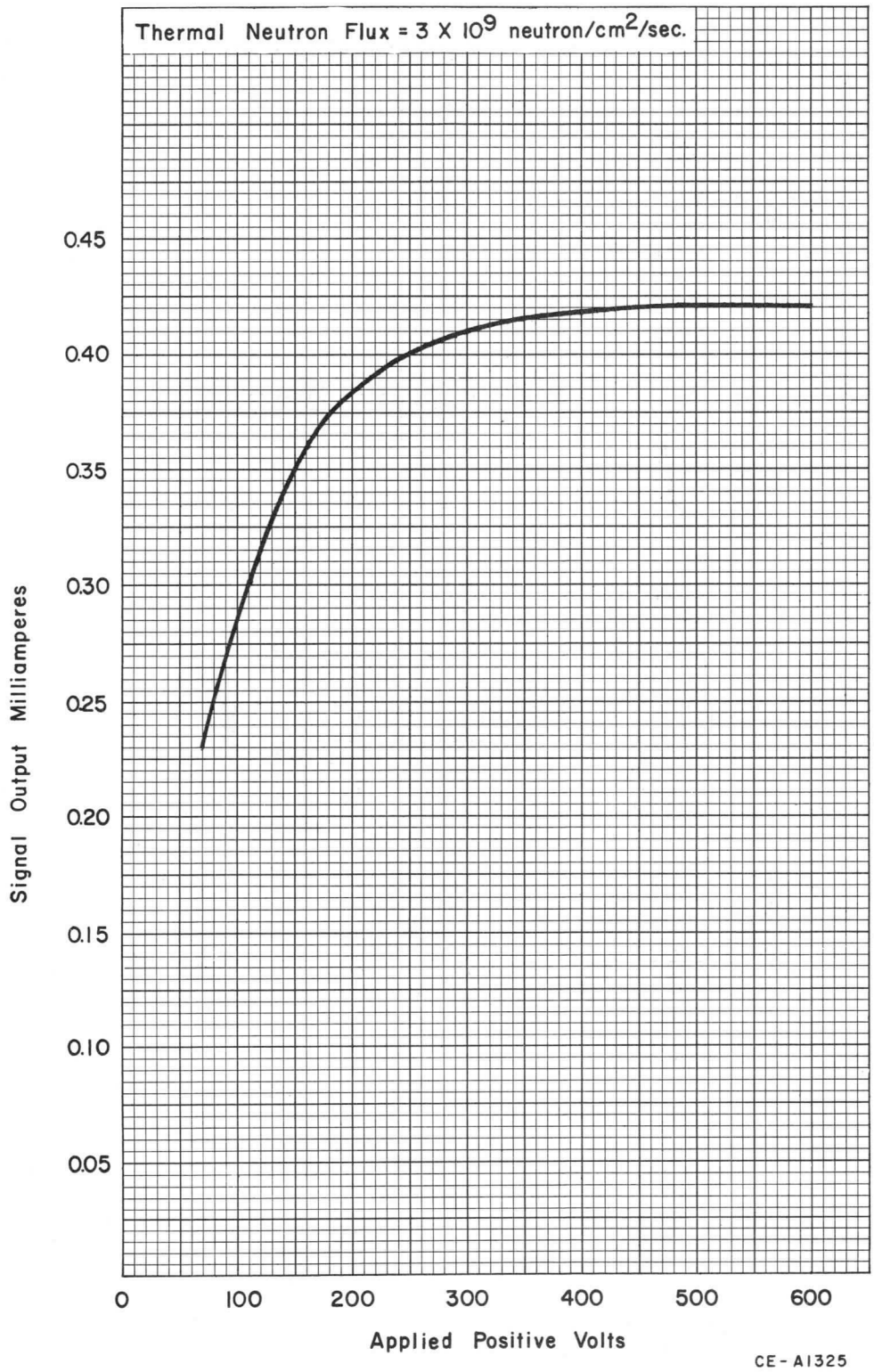

FIGURE 3

May 1, 1960

COMPENSATED IONIZATION CHAMBER TYPE 6377

The 6377 compensated ionization chamber is designed to detect thermal neutrons in the range from 2.5×10^2 to 2.5×10^{10} neutrons/cm^2/second, in the presence of very high gamma radiation fields. The detector is extremely rugged in construction, meeting MIL-S-901 for shock and MIL-Std-167 (type 1) for vibration, and may be operated in any position at temperatures up to 175°F. The 6377, including the connectors, is constructed of magnesium alloy, with high stability, crosslinked polystyrene insulation. The use of this latter material assures completely noise free performance of the detector, even in the lowest decade of operation.

The 6377 incorporates two outstanding features. The first is the use of guard ring construction throughout to minimize the reduction in signal currents due to electrical leakage of the insulators. The second is the provision for continuously variable, electrical compensation. This feature provides any desired degree of reduction of the signal caused by gamma radiation, including complete cancellation.

The thermal neutron sensitivity of the 6377 is approximately 4×10^{-14} amperes/neutron/cm^2/second. The gamma sensitivity, when operated uncompensated, is approximately 3×10^{-11} amperes/R/hour.

The 6377 is similar to the 7353, differing only in outline dimensions.

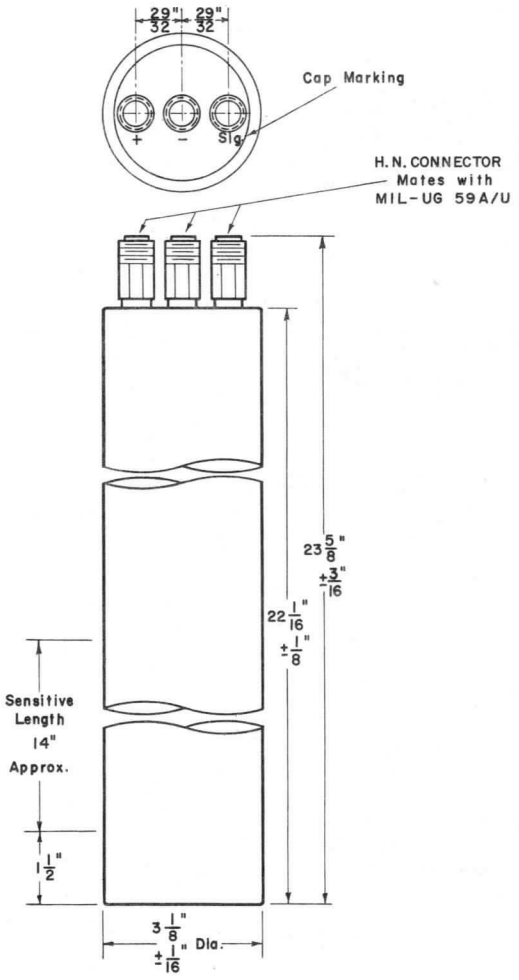

MECHANICAL:

Maximum Diameter	3-3/16	Inches
Maximum Overall Length	23-13/16	Inches
Approximate Sensitive Length	14	Inches
Net Weight	5-3/8	Pounds
Shipping Weight	19	Pounds

MATERIALS:

Outer Case	3% Al, 97% Mg Alloy
Electrodes	3% Al, 97% Mg Alloy
Insulation	Stabilized Polystyrene
Neutron Sensitive Material:	
Content	Boron enriched in B-10
Thickness	1 mg/cm^2
Gas Filling	Nitrogen

IMPEDANCE:

Resistance: (Note 2)		
Signal Electrode to Case (Minimum)	10^{14}	Ohms
H.V. Electrode to Case (Minimum)	10^{12}	Ohms
Compensating Electrode to Case (Minimum)	10^{12}	Ohms
Capacitance: (Note 1)		
Signal Electrode to Case (Approx.)	275	$\mu\mu$f
H.V. Electrode to Case (Approx.)	315	$\mu\mu$f
Compensating Electrode to Case (Approx.)	125	$\mu\mu$f

MAXIMUM RATINGS:

Voltage Between Electrodes (dc)	1500	max.	Volts
Temperature	175	max.	Degrees F
External Pressure (Note 3)	180	max.	Pounds/Inch^2
Thermal Neutron Flux	5×10^{11}	max.	nv

TYPICAL OPERATION:

Typical Connection	See Figure 1	
Operating Voltage	300 to 800	Volts
Compensating Voltage (See Figure 3)	−10 to −80	Volts
Saturation Characteristics	See Figure 2	
Thermal Neutron Flux Range	2.5×10^{2} to 2.5×10^{10}	nv
Thermal Neutron Sensitivity	4×10^{-14}	Amperes/nv
Gamma Sensitivity:		
Total Compensation		zero
Uncompensated	3×10^{-11}	Amperes/R/hour

1. Capacitance is measured between an electrode and case, with all other electrodes grounded.
2. The detector may not be immersed directly in water, and high humidity environments should be avoided as they will impair performance.
3. The pressurizing atmosphere must be dry and non-corrosive.

TYPICAL CONNECTION DIAGRAM

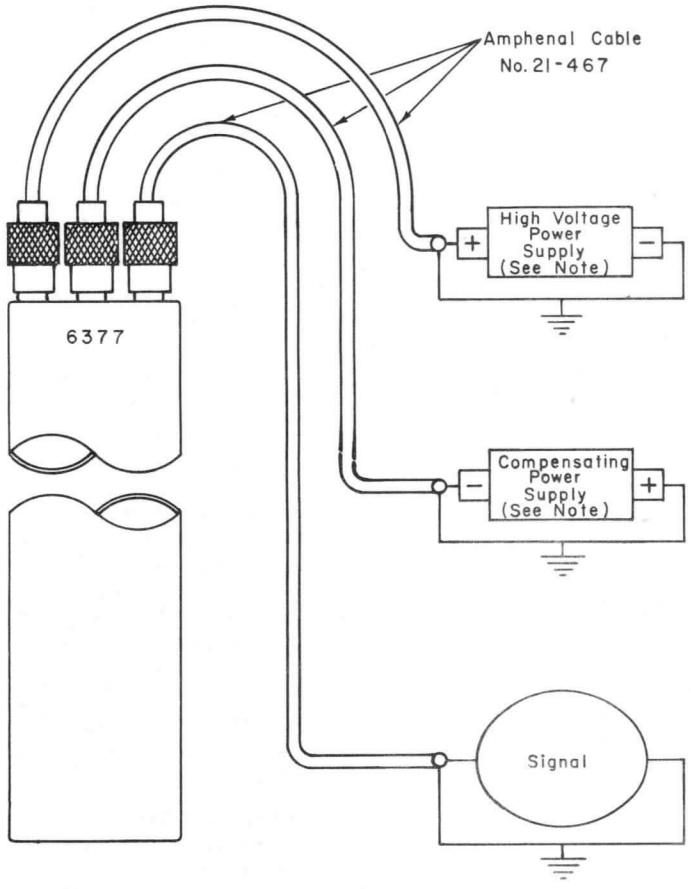

Note: Permissible power supply regulation and ripple will depend upon the particular application. See Section entitled "Ionization Chamber Operation."

CE-A1324 R1

FIGURE 1

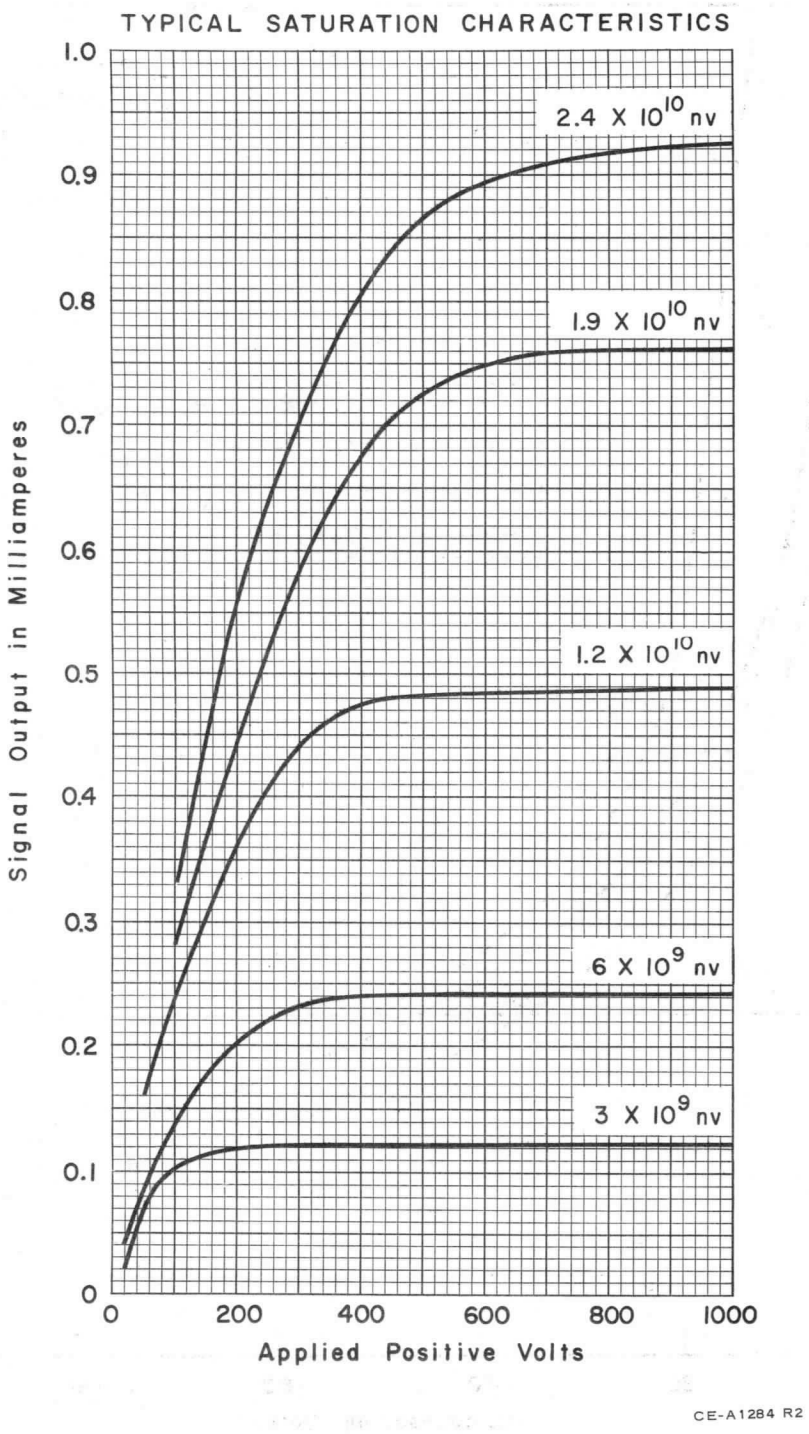
TYPICAL SATURATION CHARACTERISTICS
Signal Output in Milliamperes
1.0
0.9
0.8
0.7
0.6
0.5
0.4
0.3
0.2
0.1
0
0
200
400
600
800
1000
Applied Positive Volts
2.4 X 10^10 nv
1.9 X 10^10 nv
1.2 X 10^10 nv
6 X 10^9 nv
3 X 10^9 nv
CE-A1284 R2

FIGURE 2

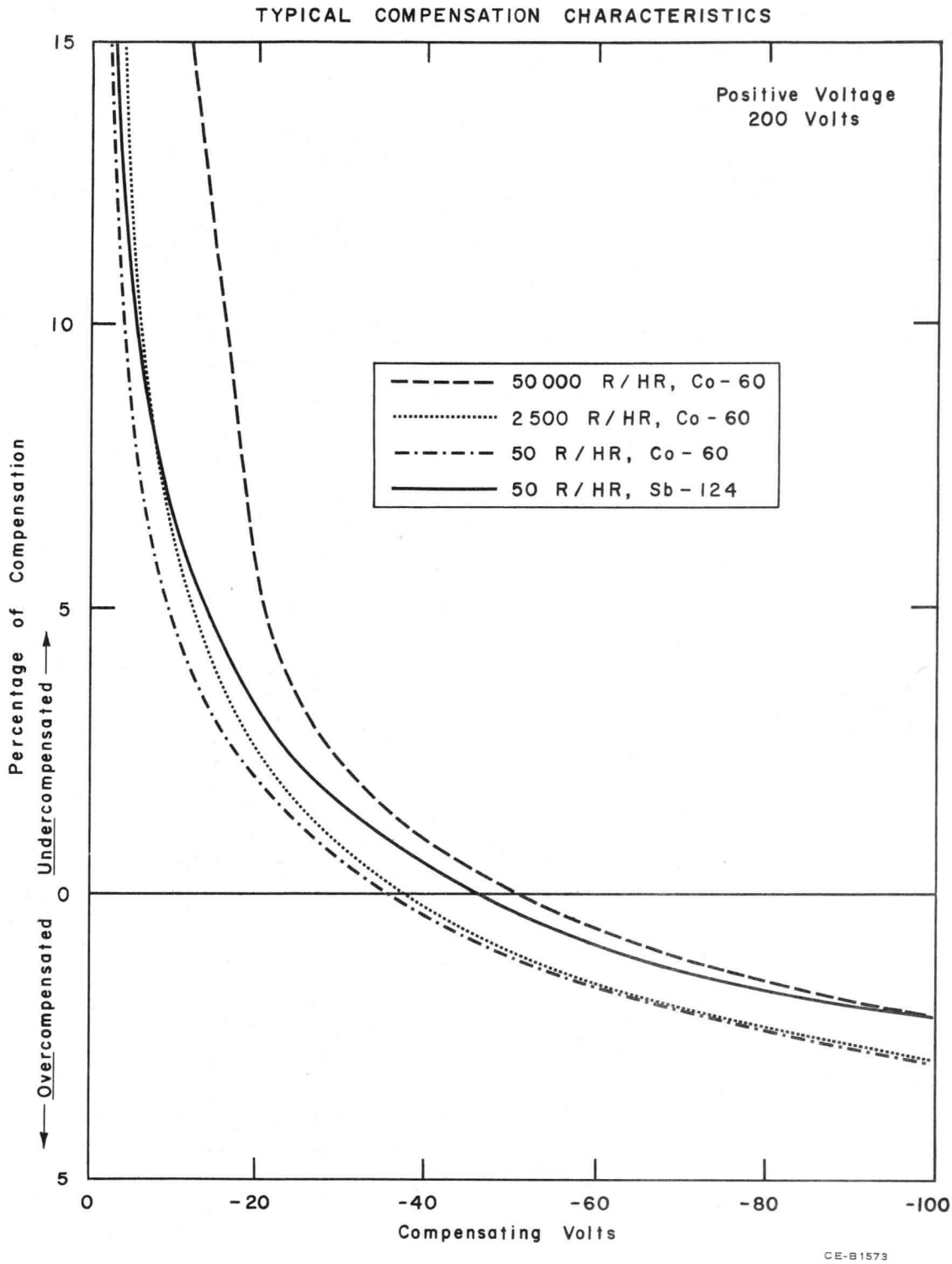
TYPICAL COMPENSATION CHARACTERISTICS
Positive Voltage
200 Volts
50 000 R/HR, Co-60
2 500 R/HR, Co-60
50 R/HR, Co-60
50 R/HR, Sb-124
Percentage of Compensation
Undercompensated
Overcompensated
15
10
5
0
5
0
-20
-40
-60
-80
-100
Compensating Volts
CE-B1573

FIGURE 3

Westinghouse®

6937
6937A

April 1, 1960

UNCOMPENSATED IONIZATION CHAMBER TYPES 6937 AND 6937A

The 6937 ionization chamber is designed to detect neutrons of thermal energy in the range from 2.5×10^3 to 2.5×10^{10} neutrons/cm^2/second. The chamber utilizes guard ring construction throughout, a feature which minimizes insulation leakage in low current devices. The 6937 is extremely rugged, meeting Military Specifications MIL-S-901 for shock and MIL-Std-167 (Type 1) for vibration, and may be operated in any position at temperatures up to 175°F. The 6937A is identical to the 6937 except being rated to 300°F.

The materials used in the construction of the detector, including those used in the type HN connectors have been selected for low activation properties, thereby facilitating handling after exposure to high intensity neutron fluxes. The thermal neutron sensitivity of the 6937 is approximately 4.4×10^{-14} amperes/neutron/cm^2/second, with a gamma sensitivity of approximately 5×10^{-11} amperes/R/hr. The 6937 and 6937A are similar to the 7606, differing primarily in temperature ratings.

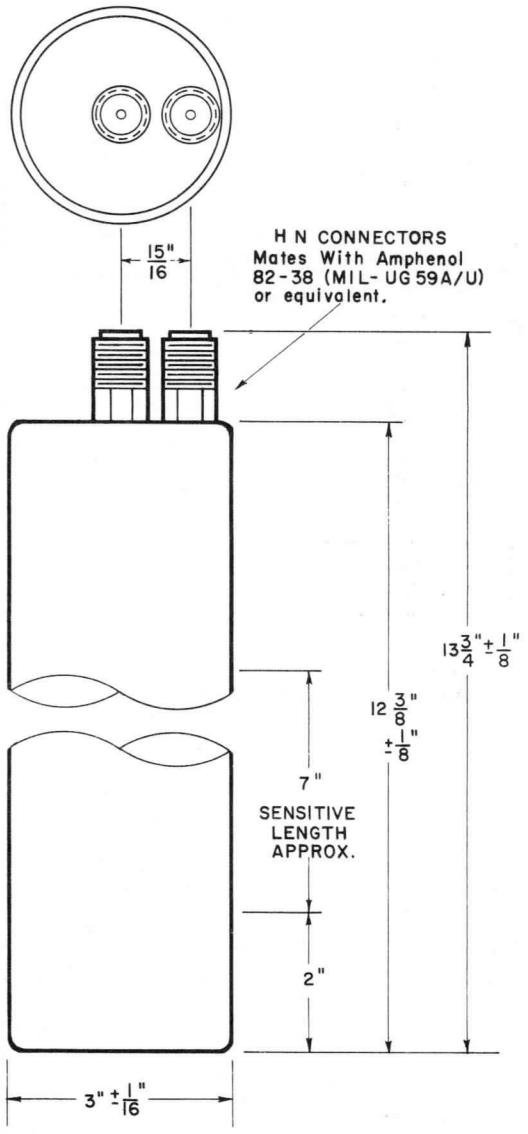

MECHANICAL:		
Maximum Diameter	3-1/16	Inches
Maximum Overall Length	13-7/8	Inches
Approximate Sensitive Length	7	Inches
Net Weight	2-1/2	Pounds
Shipping Weight	10	Pounds
MATERIALS:		
Outer Case	Aluminum	
Electrodes	Aluminum	
Insulation	Alumina Ceramic	
Neutron Sensitive Material	Boron Enriched to 96% in B-10	
Gas Filling	Argon-Nitrogen Mixture	
IMPEDANCE:		
Resistance:		
Signal Electrode to Case (minimum)	10^{11}	Ohms
H.V. Electrode to Case (minimum)	10^{11}	Ohms
Capacity:		
Signal Electrode to Case (Note 3)	250	$\mu\mu$f
H.V. Electrode to Case (Note 4)	170	$\mu\mu$f
MAXIMUM RATINGS:		
Voltage Between Electrodes	1500	Volts
Temperature:		
6937	175	°F
6397A	300	°F
External Pressure (Note 2)	180	Pounds/Inch^2
Thermal Neutron Flux	10^{11}	nv
TYPICAL OPERATION:		
Operating Voltage (Note 1)	200 to 1000	Volts
Saturation Characteristics	Figure 2	
Thermal Neutron Flux Range	2.5×10^3 to 2.5×10^{10}	nv
Thermal Neutron Sensitivity (Approx.)	4.4×10^{-14}	Amperes/nv
Gamma Sensitivity (Approx.)	5×10^{-11}	Amperes/R/hr

1. The voltage necessary to produce saturation varies with the neutron flux level. Either polarity may be used. See Figure 2.
2. The pressurizing atmosphere must be dry and non-corrosive.
3. With H.V. electrode grounded to case.
4. With signal electrode grounded to case.

TYPICAL CONNECTION DIAGRAM

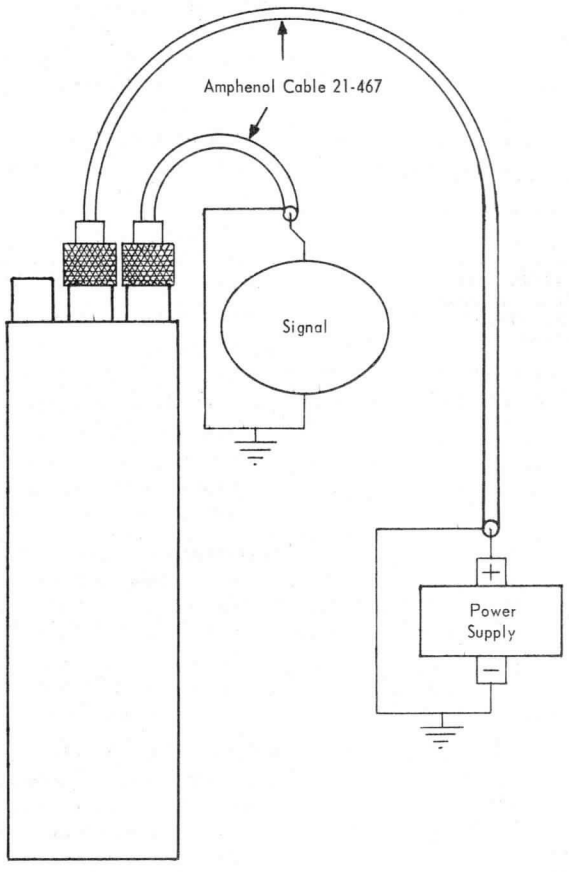

CE-A1293

FIGURE 1

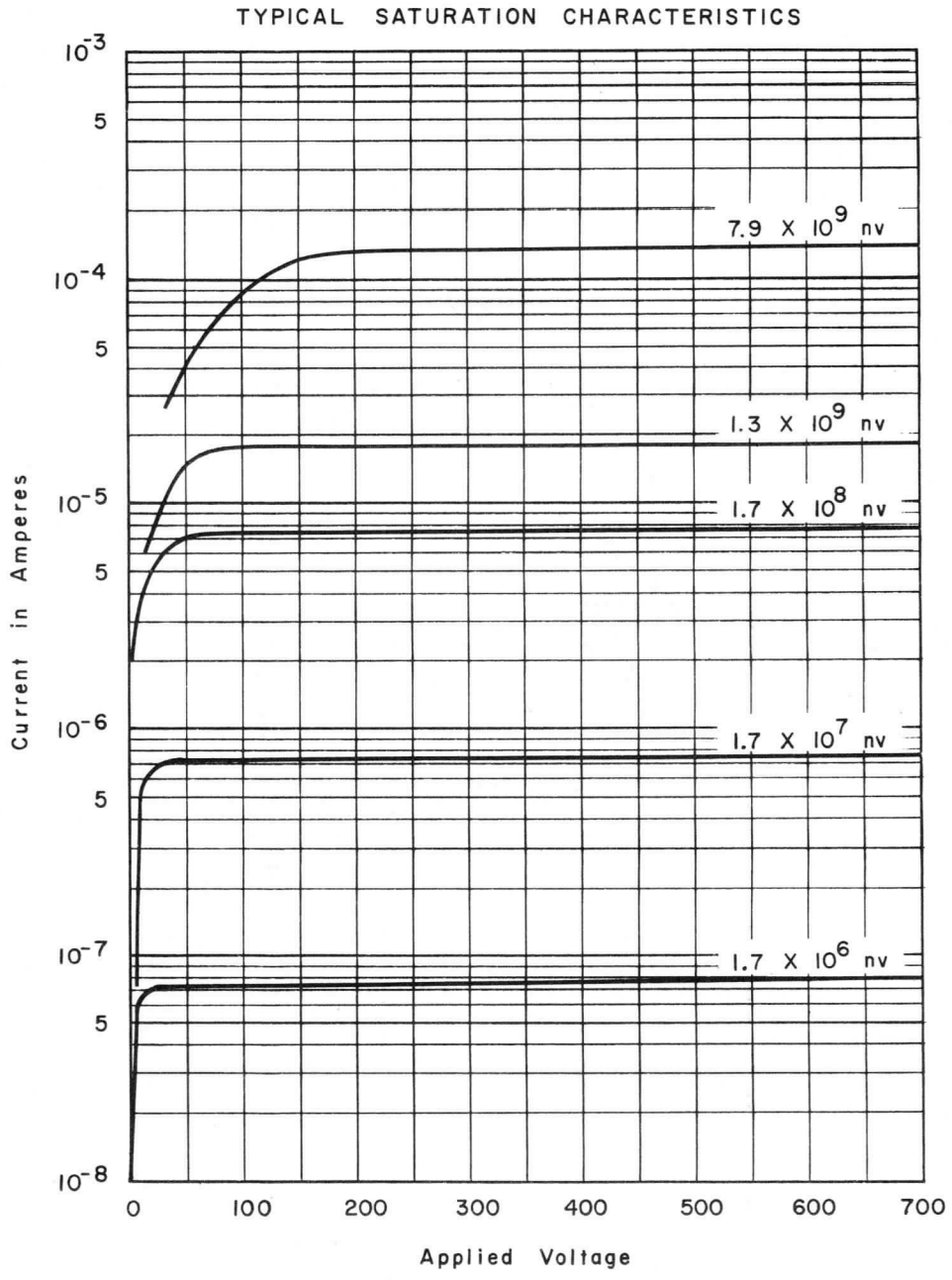
TYPICAL SATURATION CHARACTERISTICS
Current in Amperes
10^{-3}
5
10^{-4}
5
10^{-5}
5
10^{-6}
5
10^{-7}
5
10^{-8}
7.9 X 10^{9} nv
1.3 X 10^{9} nv
1.7 X 10^{8} nv
1.7 X 10^{7} nv
1.7 X 10^{6} nv
0
100
200
300
400
500
600
700
Applied Voltage
CE-A1292 R1

FIGURE 2

HIGH SENSITIVITY BF_3 PROPORTIONAL COUNTER TYPE 6938

The 6938 proportional counter is designed to detect neutrons of thermal and intermediate energies in the range from 2.2×10^{-2} to 2.2×10^{3} neutrons/cm^2/second. It is a multi-unit BF_3 proportional counter in which the outer case is electrically insulated from the elements, thereby avoiding ground loop problems in circuitry. The detector is provided with a type HN connector and four tapped holes in the connector end plate for mechanical support or handling. The 6938 is rugged in construction and will operate in any position up to 175°F.

The 6938 consists of four 7317 proportional counters positioned and insulated by a polyethylene moderator block within a heavy walled aluminum outer case. The materials used in the detector have been selected for low activation properties, thereby facilitating handling after exposure to neutron fluxes. The thermal neutron sensitivity of the 6938 is approximately 45 counts/neutron/cm^2 at an operating voltage of 2000 volts.

ot approximately 45 counts/neutron/cm^2 with an operati

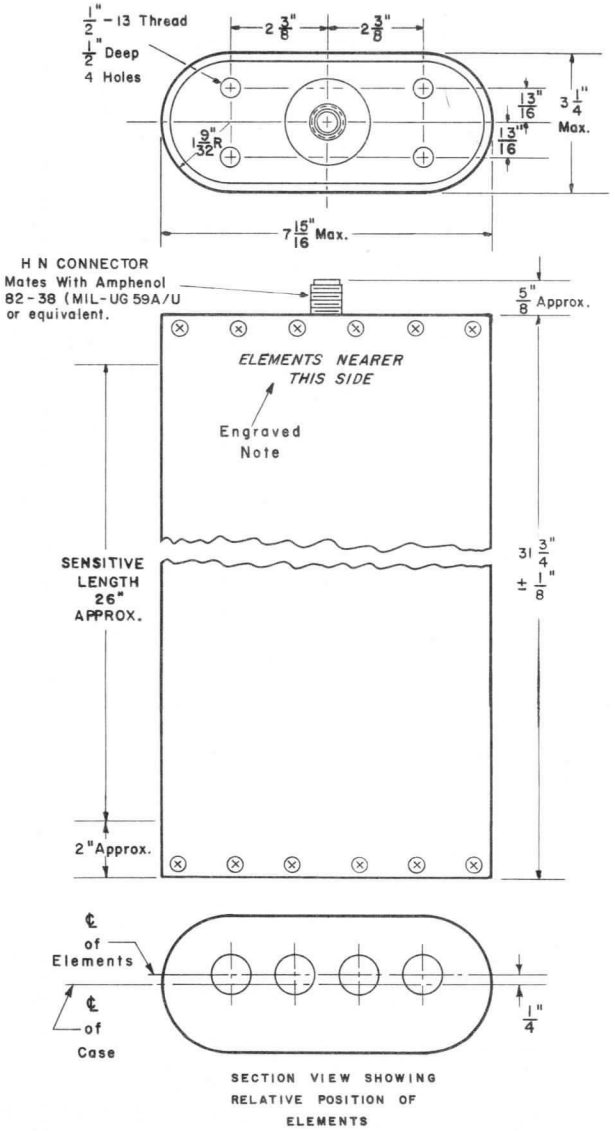

SECTION VIEW SHOWING RELATIVE POSITION OF ELEMENTS

MECHANICAL:		
Maximum Width & Thickness	7-15/16 x 3-1/4	Inches
Maximum Overall Length	31-7/8	Inches
Approximate Sensitive Length	26	Inches
Net Weight	30	Pounds
Shipping Weight	60	Pounds
MATERIALS:		
Outer Case		Aluminum
Element Body		EC Grade Aluminum
Electrodes		0.001 Inch Dia. Tungsten
Connector		Magnesium
Insulation:		
Elemental Detectors		Alumina Ceramic
Connector		Polystyrene
Moderator		Polyethylene
Neutron Sensitive Material:		
Content	Boron trifluoride enriched to 96% in Boron-10	
Pressure		55 Cm of Hg
IMPEDANCE:		
Resistance (minimum)	10^{10}	Ohms
Capacitance (approx.)	120	$\mu\mu$f
MAXIMUM RATINGS:		
Voltage Between Electrodes	2500	Volts
Temperature	175	Degrees F
External Pressure (Note 3)	180	Pounds/Inch^2
Operating:		
Thermal Neutron Flux	10^{4}	nv
Non-Operating:		
Thermal Neutron Flux (Note 1)	10^{10}	nv
Gamma Flux (Note 1)	10^{5}	R/hr
TYPICAL OPERATION: (Note 2)		
Operating Voltage	2000	Volts
Thermal Neutron Flux Range	2.2×10^{-2} to 2.2×10^{3}	nv
Sensitivity	45	CPS/nv
Plateau Characteristics:		
Length (minimum)	200	Volts
Overall Slope (maximum)	4	Per-cent
Output Pulse Characteristics:		
Amplitude (approx. unloaded)	60	Millivolts
Inherent Rise Time (average)	10^{-7}	Seconds
Inherent Background (Note 4)	1	Count/Second

1. When in radiation levels exceeding the maximum operating levels the high voltage should be removed and the tube shorted through a maximum of three megohms. See the section entitled "Proportional Counter Operation".
2. These characteristics will vary depending upon the associated circuitry. For application details see the section entitled "Proportional Counter Operation".
3. The pressurizing atmosphere must be dry and non-corrosive.
4. The tube may not be immersed in water. High humidity environments should be avoided as they may impair performance.

March 15, 1960

DUAL RANGE FISSION TYPES 6941 AND 6941A

The 6941 fission chamber is designed to detect thermal neutrons in the range of 5 to 5 x 10^5 neutrons/cm^2/second when operated as a counter, and in the range of 4 x 10^5 to 8.5 x 10^{10} neutrons/cm^2/second when operated as a chamber. The detector is extremely rugged in construction, meeting MIL-S-901 for shock and MIL-Std-167 (type 1) for vibration, and may be operated in any position at temperatures up to 175°F. The 6941A is identical to the 6941 except being rated to 300°F.

The 6941 consists of an aluminum outer case and electrodes, with high purity alumina ceramic insulators throughout, including those used in the type HN coaxial connector. In typical operation as a fission counter the 6941 has a thermal neutron sensitivity of approximately 0.2 counts/neutron/cm^2 throughout a wide range of applied voltage. When connected for service as an ionization chamber, the thermal neutron sensitivity is approximately 2.6 x 10^{-14} amperes/neutron/cm^2/second with a gamma sensitivity of approximately 3 x 10^{-11} amperes/R/hour.

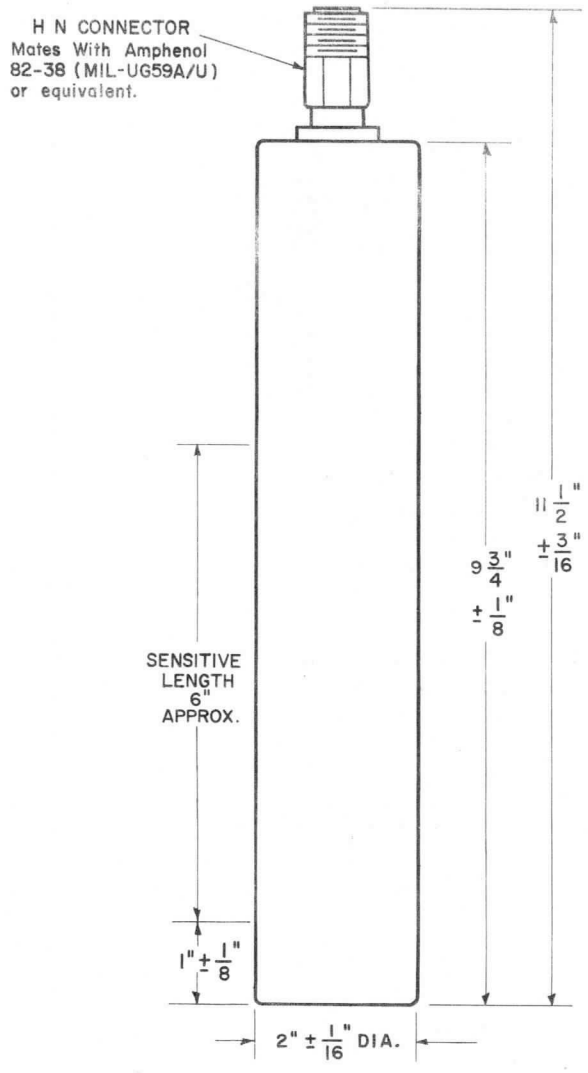

CE-A1253-RI

MECHANICAL:

Maximum Diameter	2-1/16	Inches
Maximum Overall Length	11-11/16	Inches
Approximate Sensitive Length	6	Inches
Net Weight	1-3/4	Pounds
Shipping Weight	12	Pounds

MATERIALS:

Outer Case	Aluminum
Electrodes	Aluminum
Insulation	Alumina Ceramic
Neutron Sensitive Material:	
Content	U_3O_8 Enriched to more than 90% in U-235
Thickness	2 mg/cm^2
Total Quantity	0.43 Grams
Gas Filling	Argon-Nitrogen Mixture
Gas Pressure	76 cm of Hg

IMPEDANCE:

Resistance (minimum)	10^9	Ohms
Capacitance	180	$\mu\mu f$

MAXIMUM RATINGS:

Voltage Between Electrodes	1000	Volts
Temperature:		
6941	175	Degrees F
6941A	300	Degrees F
External Pressure (Note 2)	180	Pounds/$Inch^2$
Operating:		
Thermal Neutron Flux	8.5 x 10^{10}	nv

TYPICAL OPERATION AS A COUNTER: (Note 1)

Operating Voltage	300	Volts
Operating Voltage Plateau (See Figure 2)	200 to 800	Volts
Thermal Neutron Flux Range	5 to 5 x 10^5	nv
Sensitivity	0.2	CPS/nv
Output Pulse Characteristics:		
Amplitude (unloaded)	2 x 10^{-4}	Volts
Inherent Rise Time (average)	2 x 10^{-7}	Seconds

TYPICAL OPERATION AS A CHAMBER:

Operating Voltage (Note 3)	300 to 1000	Volts
Saturation Characteristics	See Figure 3	
Thermal Neutron Flux Range (Note 4)	4 x 10^5 to 8.5 x 10^{10}	nv
Thermal Neutron Sensitivity	2.6 x 10^{-14}	Amperes/nv
Gamma Sensitivity	3 x 10^{-11}	Amperes/R/hour

1. The sensitivity is 0.2 counts/neutron/cm^2 when the alpha background counting rate of the naturally radioactive uranium is adjusted to about 2 counts/second. By varying the pulse height selector on the associated circuitry, or by use of high resolution circuitry, other sensitivities are available. See Figure 1 and the section entitled "Fission Counter Operation".
2. The pressurizing atmosphere must be dry and non-corrosive.
3. The minimum voltage required for saturation is dependent upon the incident neutron flux level. See Figure 3.
4. The lower limit of operating range is determined by an inherent alpha background current of approximately 3 x 10^{-9} amperes.

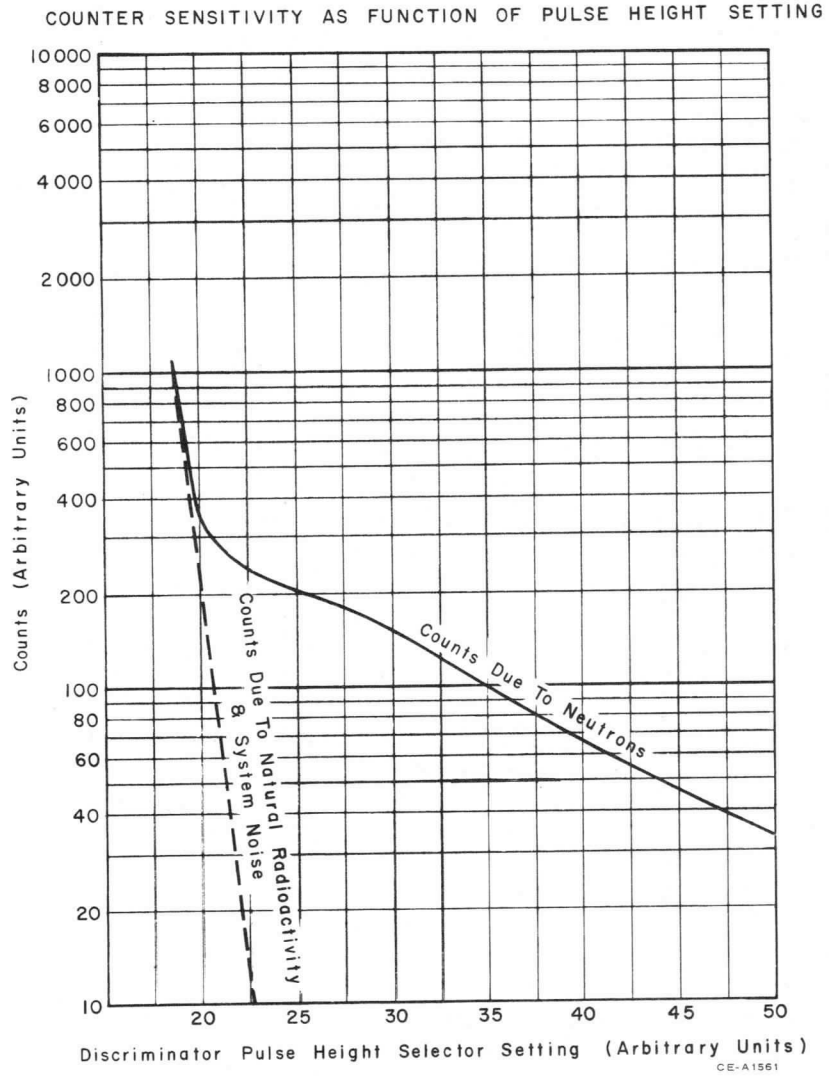

FIGURE 1

COUNTING RATE CHARACTERISTIC

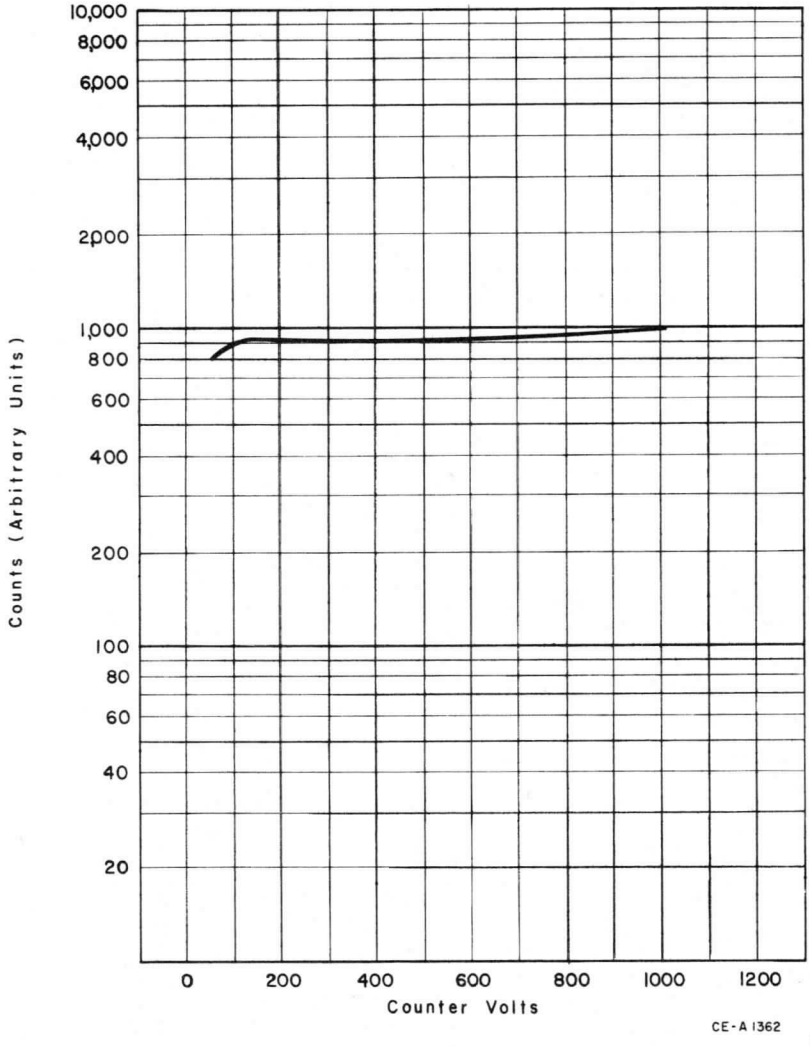

FIGURE 2

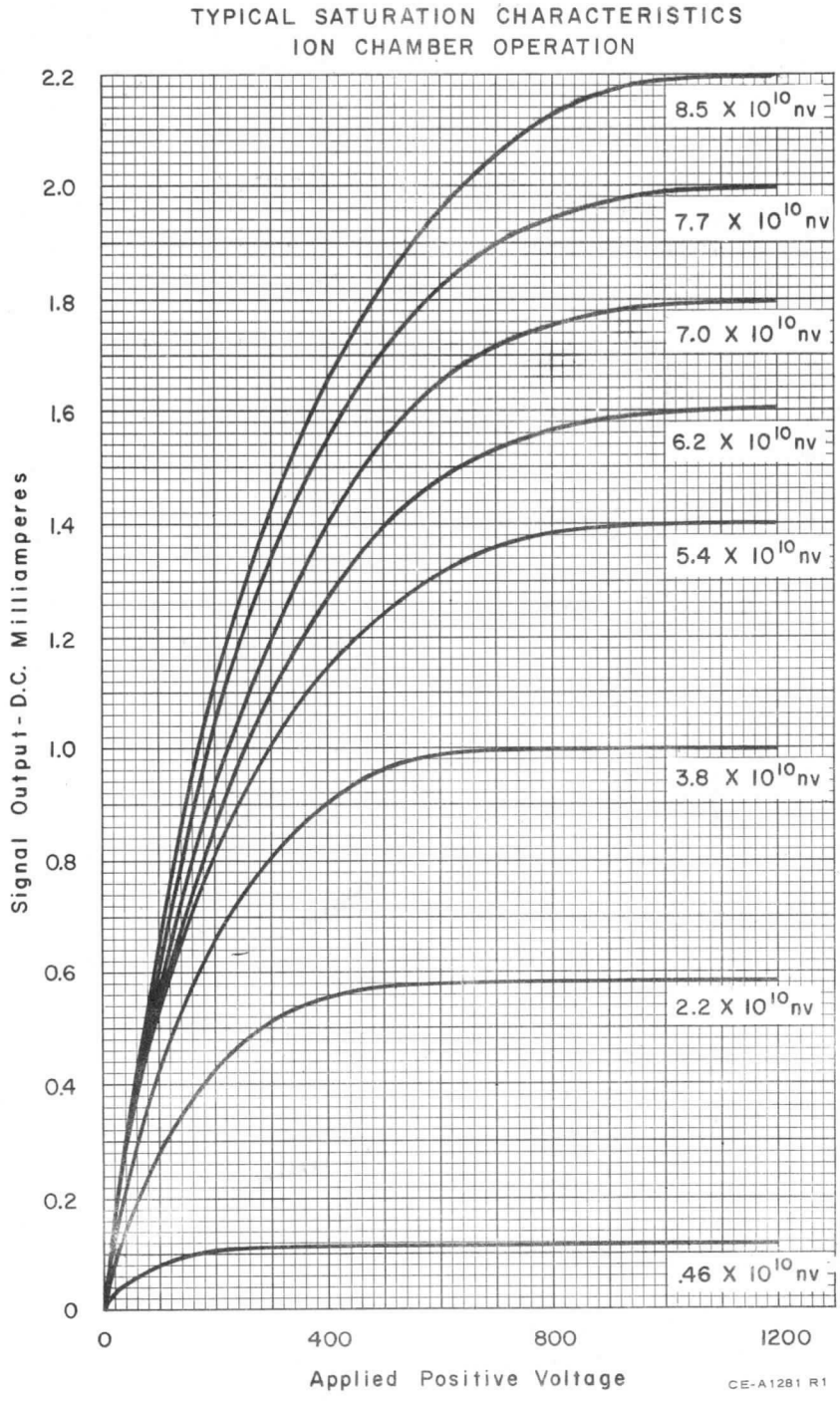
TYPICAL SATURATION CHARACTERISTICS
ION CHAMBER OPERATION
Signal Output - D.C. Milliamperes
2.2
2.0
1.8
1.6
1.4
1.2
1.0
0.8
0.6
0.4
0.2
0
8.5 X 10^10 nv
7.7 X 10^10 nv
7.0 X 10^10 nv
6.2 X 10^10 nv
5.4 X 10^10 nv
3.8 X 10^10 nv
2.2 X 10^10 nv
.46 X 10^10 nv
0
400
800
1200
Applied Positive Voltage
CE-A1281 R1

FIGURE 3

Westinghouse®

6971
6971A

March 15, 1960

DUAL RANGE FISSION CHAMBER TYPES 6971 AND 6971A

The 6971 fission chamber is designed to detect thermal neutrons in the range of 7 to 7 x 10^5 neutrons/cm^2/second when operated as a counter, and in the range of 3.3 x 10^5 to 6 x 10^{10} neutrons/cm^2/second when operated as a chamber. The detector is extremely rugged in construction, meeting MIL-S-901 for shock and MIL-Std-167 (type 1) for vibration, and may be operated in any position at temperatures up to 175°F. The 6971A is identical to the 6971 except being rated to 300°F.

The 6971 consists of an aluminum outer case and electrodes with high purity alumina ceramic insulators throughout, including those used in the type HN coaxial connector. In typical operation as a fission counter, the 6971 has a thermal neutron sensitivity of approximately 0.14 counts/neutron/cm^2 throughout a wide range of applied voltage. When connected for service as an ionization chamber, the thermal neutron sensitivity is approximately 3 x 10^{-14} amperes/neutron/cm^2/second with a gamma sensitivity of approximately 4.2 x 10^{-11} amperes/R/hour.

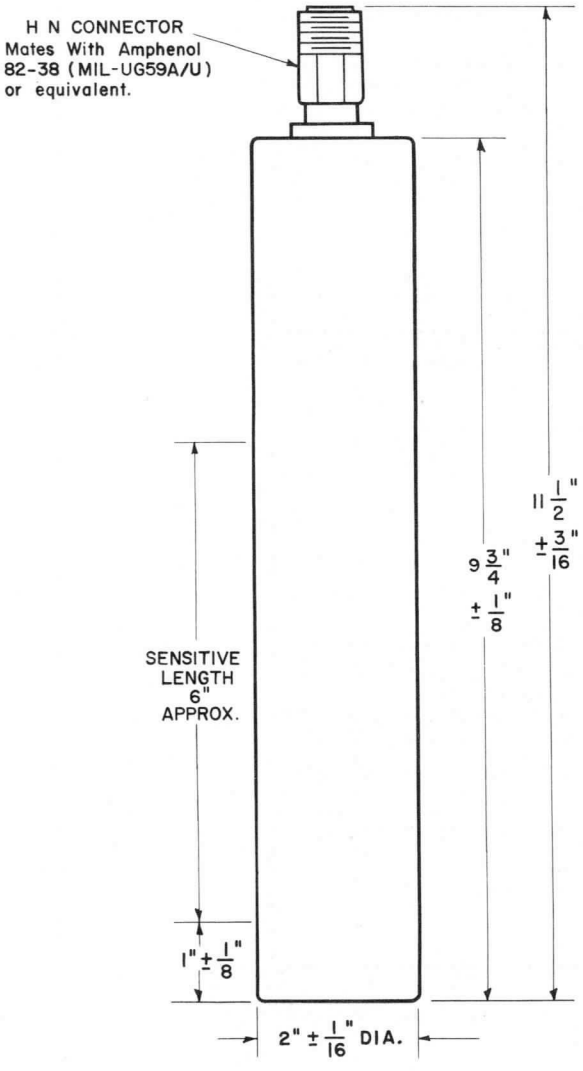

CE-A1253-R1

MECHANICAL:		
Maximum Diameter	2-1/16	Inches
Maximum Overall Length	11-11/16	Inches
Approximate Sensitive Length	6	Inches
Net Weight	1-3/4	Pounds
Shipping Weight	12	Pounds
MATERIALS:		
Outer Case		Aluminum
Electrodes		Aluminum
Insulation		Alumina Ceramic
Neutron Sensitive Material:		
Content	U_3O_8	Enriched to 20% in U-235
Thickness		2 mg/cm^2
Total Quantity		0.344 Grams
Gas Filling		Argon-Nitrogen Mixture
Gas Pressure		76 cm of Hg
IMPEDANCE:		
Resistance (minimum)	10^9	Ohms
Capacitance	190	$\mu\mu$f
MAXIMUM RATINGS:		
Voltage Between Electrodes	1000	Volts
Temperature:		
6971	175	Degrees F
6971A	300	Degrees F
External Pressure (Note 2)	180	Pounds/$Inch^2$
Operating:		
Thermal Neutron Flux	6 x 10^{10}	nv

Neutron & Radiation Detector Section

TYPICAL OPERATION AS A COUNTER: (Note 1)		
Operating Voltage	300	Volts
Operating Voltage Plateau (See Figure 2)	200 to 800	Volts
Thermal Neutron Flux Range	7 to 7 x 10^5	nv
Sensitivity	0.14	CPS/nv
Output Pulse Characteristics:		
Amplitude (unloaded)	2 x 10^{-4}	Volts
Inherent Rise Time (average)	2 x 10^{-7}	Seconds
TYPICAL OPERATION AS A CHAMBER:		
Operating Voltage (Note 3)	300 to 1000	Volts
Saturction Characteristics	See Figure 3	
Thermal Neutron Flux Range (Note 4)	3.3 x 10^5 to 6 x 10^{10}	Volts
Thermal Neutron Sensitivity	3 x 10^{-14}	Amperes/nv
Gamma Sensitivity	4.2 x 10^{-11}	Amperes/R/hour

1. The sensitivity is 0.14 counts/neutron/cm^2 when the alpha background counting rate of the naturally radioactive uranium is adjusted to about 1 count/second. By varying the pulse height selector on the associated circuitry, other sensitivities are available. See Figure 1, and the section entitled "Fission Counter Operation".
2. The pressurizing atmosphere must be dry and non-corrosive.
3. The minimum voltage required for saturation is dependent upon the incident neutron flux level. See Figure 3.
4. The lower limit of operating range is determined by an inherent alpha background current of approximately 3 x 10^{-9} amperes.

COUNTER SENSITIVITY AS FUNCTION OF PULSE HEIGHT SETTING

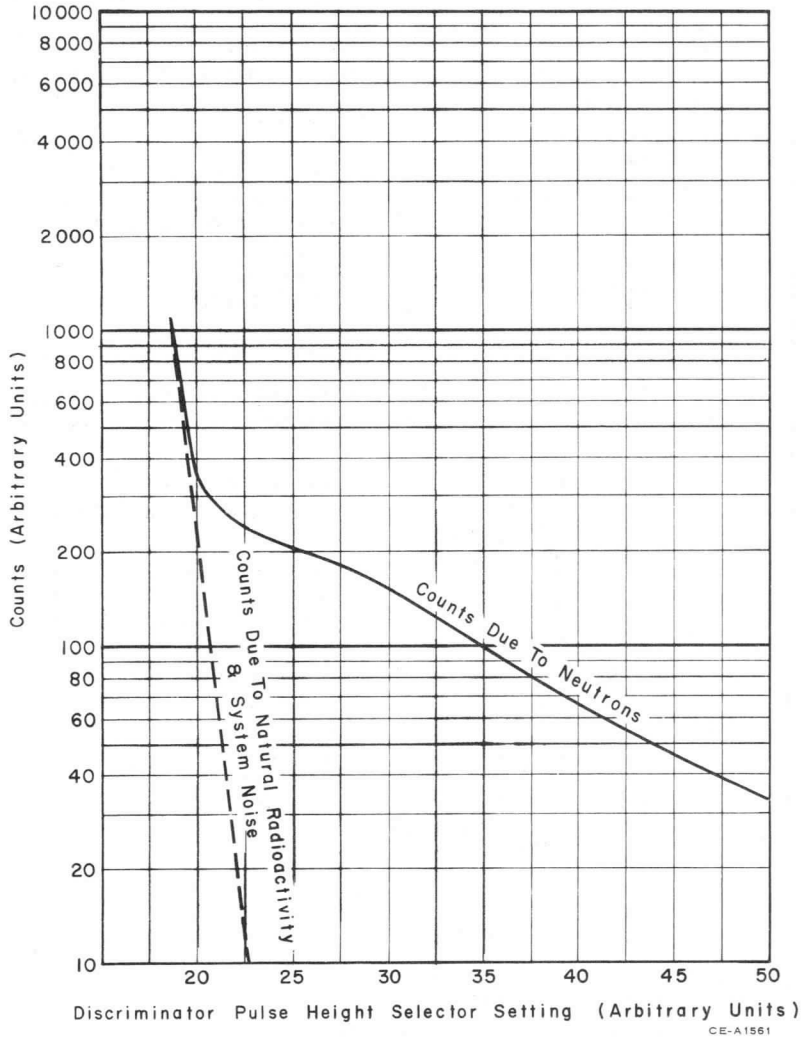

FIGURE 1

COUNTING RATE CHARACTERISTIC

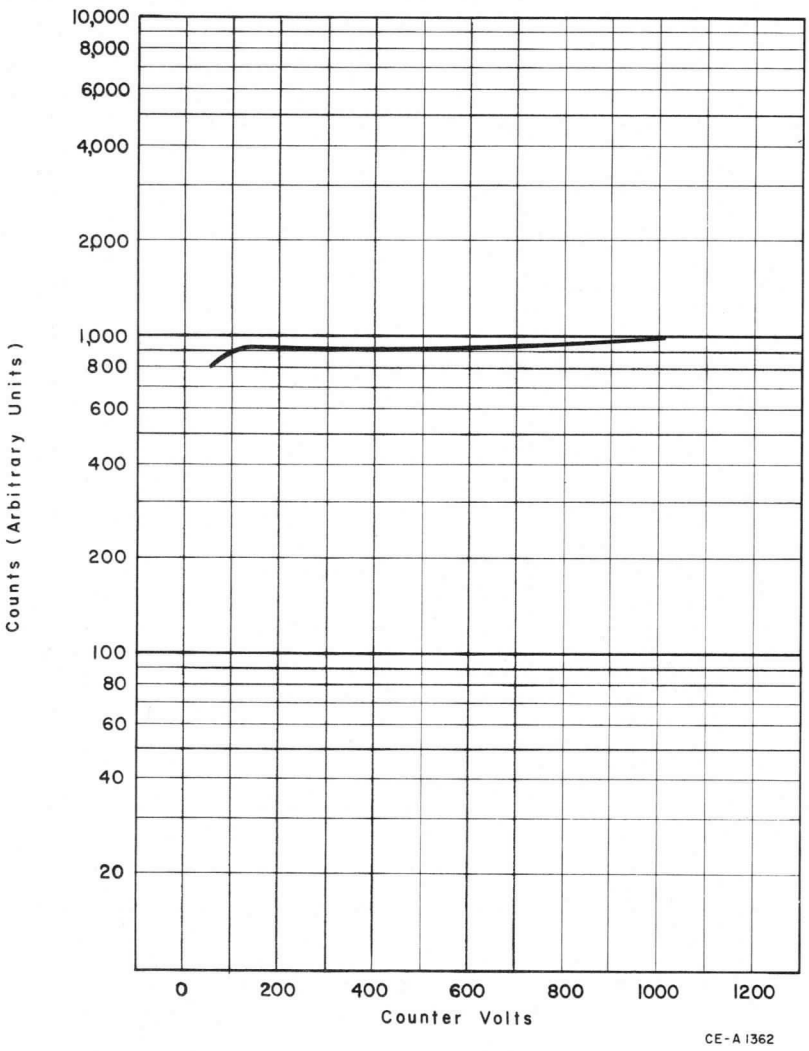

FIGURE 2

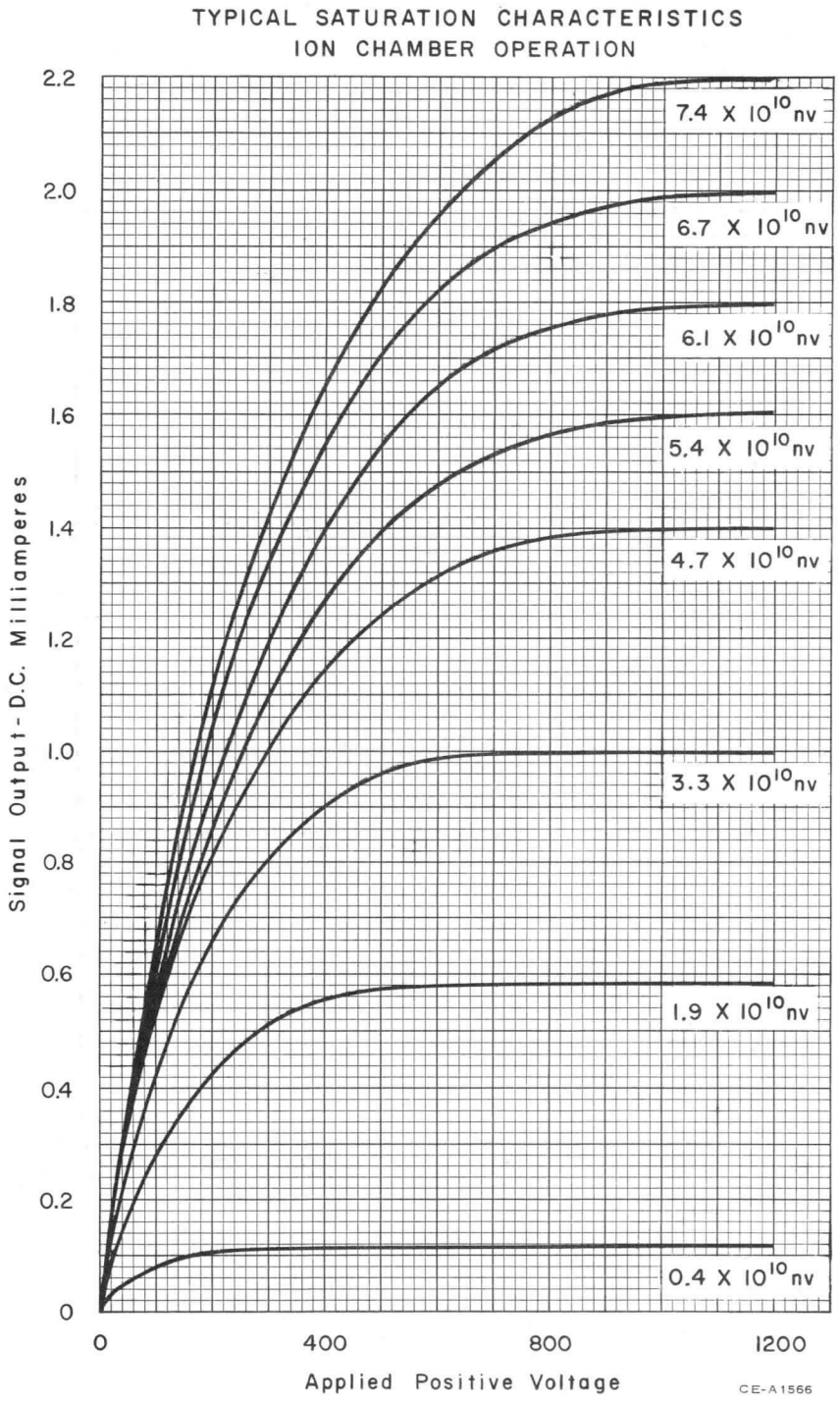
TYPICAL SATURATION CHARACTERISTICS
ION CHAMBER OPERATION
Signal Output - D.C. Milliamperes
2.2
2.0
1.8
1.6
1.4
1.2
1.0
0.8
0.6
0.4
0.2
0
7.4 X 10^10 nv
6.7 X 10^10 nv
6.1 X 10^10 nv
5.4 X 10^10 nv
4.7 X 10^10 nv
3.3 X 10^10 nv
1.9 X 10^10 nv
0.4 X 10^10 nv
0
400
800
1200
Applied Positive Voltage
CE-A1566

FIGURE 3

March 1, 1960

BF_3 PROPORTIONAL COUNTER TYPE 6998

The 6998 proportional counter is designed to detect neutrons of thermal energy in the range from 7.5×10^{-2} to 7.5×10^{3} neutrons/cm^2/second. The counter is extremely rugged, meeting military specification MIL-S-901 for shock and MIL-Std-167 (type 1) for vibration, and will operate in any position at temperatures up to 225°F.

The materials used in the construction of the detector, including the connector, have been selected for low activation properties, thereby facilitating handling after exposure to neutron fluxes. The thermal neutron sensitivity of the 6998 is approximately 13 counts/neutron/cm^2 at an operating voltage of 2000 volts.

The 6998 is similar to the 7317, differing only in having a coaxial connector instead of a flying lead.

MECHANICAL:

Maximum Diameter	1-1/32	Inches
Maximum Overall Length	30-1/2	Inches
Approximate Sensitive Length	26	Inches
Net Weight	10	Ounces
Shipping Weight	5	Pounds

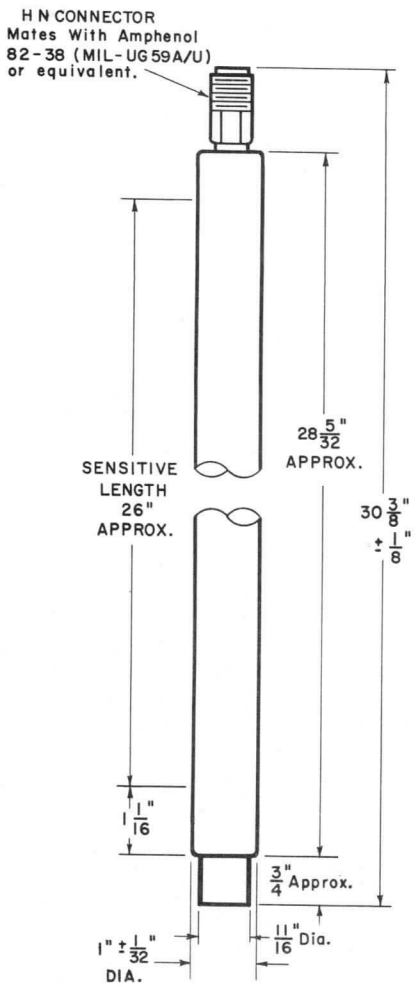

MATERIALS:

Body	EC Grade Aluminum
Electrode	0.001 Inch Dia. Tungsten
Connector	Magnesium
Insulation:	
Electrode Supports	Alumina Ceramic
Connector	Polystyrene
Neutron Sensitive Material:	
Content	Boron trifluoride enriched to 96% in Boron-10
Pressure	55 Cm of Hg

IMPEDANCE:

Resistance (minimum)	10^{11}	Ohms
Capacitance	20	$\mu\mu f$

MAXIMUM RATINGS:

Voltage Between Electrodes	2500	Volts
Temperature	225	°F
External Pressure (Note 3)	180	Pounds/$Inch^2$
Operating:		
Thermal Neutron Flux	4×10^4	nv
Non-Operating:		
Thermal Neutron Flux (Note 1)	10^{10}	nv
Gamma Flux (Note 1)	10^5	R/hr

TYPICAL OPERATION: (Note 2)

Operating Voltage	2000	Volts
Thermal Neutron Flux Range	7.5×10^{-2} to 7.5×10^3	nv
Sensitivity	13	CPS/nv
Plateau Characteristics:		
Length (minimum)	200	Volts
Overall Slope (maximum)	4	Per-cent
Output Pulse Characteristics:		
Amplitude (approx. unloaded)	60	Millivolts
Inherent Rise Time (Average)	10^{-7}	Seconds
Inherent Background (Note 4)	0.3	Counts/second

1. When in flux levels exceeding the maximum operating level the high voltage should be removed and the detector shorted through a maximum of three megohms. See the section entitled "Proportional Counter Operation".

2. These characteristics will vary depending upon the associated circuitry. For application details see the section entitled "Proportional Counter Operation".

3. The pressurizing atmosphere must be dry and non-corrosive.

4. High humidity environments should be avoided since they may impair performance.

Westinghouse®

WL-7087
WL-7087A

September 1, 1962

HIGH SENSITIVITY BF_3 PROPORTIONAL COUNTER
TYPES WL-7087 AND WL-7087A

The WL-7087 proportional counter is designed to detect neutrons of thermal and intermediate energies in the range from 1.25×10^{-2} to 1.25×10^{4} neutrons/cm²/second. It is a multi-unit BF_3 proportional counter in which the outer case is electrically insulated from the elements, thereby avoiding ground loop problems in circuitry. The detector is provided with an integral 12 foot length of RG-149/U coaxial cable. The cable and outer case are hermetically sealed, permitting operation in high humidity environments. The WL-7087 is rugged in construction, meeting MIL-S-901 for shock and MIL-Std-167 (type 1) for vibration, and will operate in any position at temperatures up to 175° F.

The detector consists of four type WL-7317 proportional counters surrounded by a heavy walled aluminum outer case. The materials used in the detector have been selected for low activation properties, thereby facilitating handling after exposure to neutron fluxes. The thermal neutron sensitivity of the WL-7087 is approximately 40 counts/neutron/cm² at an operating voltage of 2000 volts.

The WL-7087A is similar to the WL-7087, differing only in having a cable length of 25 feet. Except for outer diameter and weight, the WL-7087 and WL-7087A are identical to the WL-7429 and WL-7429A respectively.

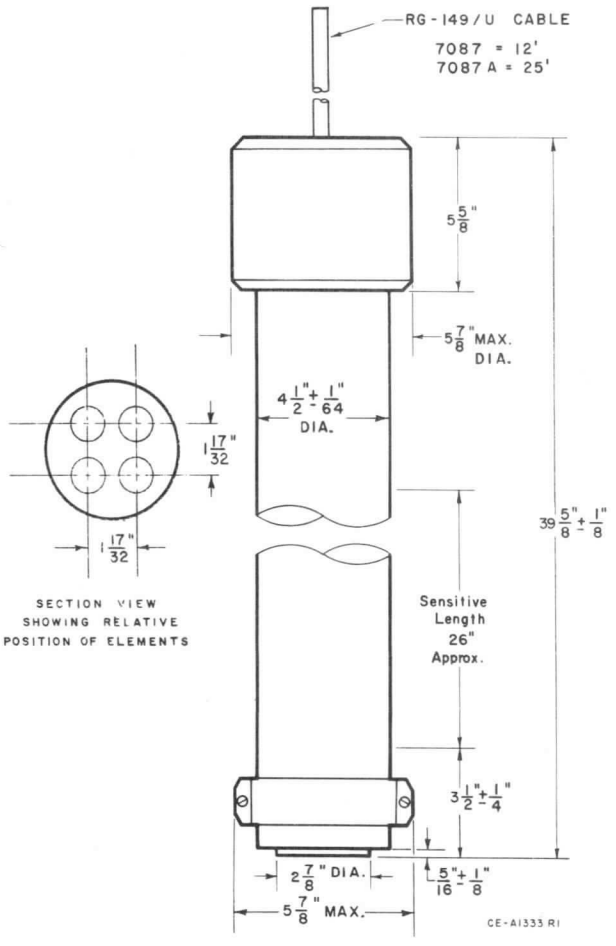

MECHANICAL:		
Maximum Diameter	5-7/8	Inches
Maximum Overall Length	39-3/4	Inches
Approximate Sensitive Length	26	Inches
Net Weight	36-3/4	Pounds
Shipping Weight	100	Pounds
Cable Length:		
WL-7087	12	Feet
WL-7087A	25	Feet
MATERIALS:		
Outer Case		Aluminum
Element Body		EC Grade Aluminum
Electrodes		0.001 Inch Dia. Tungsten
Insulation:		
Elemental Detectors		Alumina Ceramic
Cable Connectors		Polystyrene
Cable		Polyethylene
Moderator		Polyethylene
Neutron Sensitive Material:		
Content		Boron trifluoride enriched to 96% in Boron -10
Pressure		55 Cm of Hg
IMPEDANCE:		
Resistance (minimum)	10^{11}	Ohms
Capacitance:		
WL-7087	344	$\mu\mu f$
WL-7087A	610	$\mu\mu f$
MAXIMUM RATINGS:		
Voltage Between Electrodes	2500	Volts
Temperature	175	Degrees F
External Pressure (Note 3)	180	Pounds/Inch²
Operating:		
Thermal Neutron Flux	1.25×10^{4}	nv
Non-Operating:		
Thermal Neutron Flux (Note 1)	10^{10}	nv
Gamma Flux (Note 1)	10^{5}	R/hr

PRINTED IN U.S.A.

Neutron & Radiation Detector Section
WESTINGHOUSE ELECTRIC CORPORATION, ELECTRONIC TUBE DIVISION, ELMIRA, NEW YORK

TYPICAL OPERATION: (Note 2)

Operating Voltage	2000	Volts
Thermal Neutron Flux Range:		
With Conventional Circuitry	2.5×10^{-2} to 2.5×10^{3}	nv
With Special Circuitry (Note 4)	1.25×10^{-2} to 1.25×10^{4}	nv
Sensitivity	40	CPS/nv
Plateau Characteristics:		
Length (minimum)	200	Volts
Overall Slope (maximum)	4	Per-cent
Output Pulse Characteristics:		
Amplitude: (at cable end, approx. unloaded)		
WL-7087	15	Millivolts
WL-7087A	7.5	Millivolts
Inherent Background (Note 5)	0.25	Counts/second

1. When in radiation levels exceeding the maximum operating levels the high voltage should be removed and the tube shorted through a maximum of three megohms. See the section entitled "Proportional Counter Operation".
2. These characteristics will vary depending upon the associated circuitry. For application details see the section entitled "Proportional Counter Operation".
3. The pressurizing atmosphere must be dry and non-corrosive.
4. An extension of operating range of approximately the magnitude indicated may be obtained with the use of low-noise, high resolution circuitry.
5. In radiation free areas, and with low-noise circuitry, values of the order of 12 to 15 counts per minute have been observed.

The information contained herein is supplied without assuming responsibility for infringement of patents or other rights of third parties which may result from its use. No license is granted by implication or otherwise under any patent or patent rights of Westinghouse Electric Corporation.

FLUX MAPPING FISSION CHAMBER TYPE 7186

The 7186 is a miniature fission counter designed to detect thermal neutrons in the range from 10^3 to 10^8 neutrons/cm^2/second. It consists of an active volume 0.215" in diameter and 3/8" long, with an integral radiation resistant, rigid coaxial cable approximately four feet long. The 7186 is rugged in construction and may be operated in any position at temperatures up to 125°C.

The sensitive coating consists of uranium oxide, highly enriched in the U-235 isotope. Thermal neutrons incident to the coating produce fission fragments which ionize the argon-nitrogen gas filling, thereby producing pulses. The pulse size and shape is comparable to that obtained with conventional fission counters, thereby permitting operation of the 7186 with commercially available circuitry with a gain of about 5×10^4.

The exposed portions of the chamber and integral cable are stainless steel, thereby permitting operation of the sensitive volume under water. (Note 1)

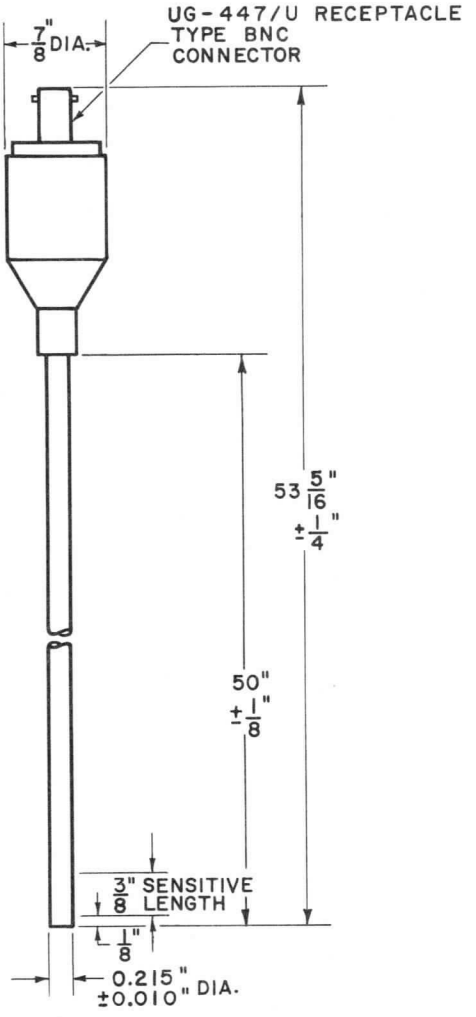

CE-A1357 R2

MECHANICAL:

Body Diameter (Max.)	0.225	Inch
Head Diameter	7/8	Inch
Overall Length	53-5/16	Inches
Approximate Sensitive Length	3/8	Inch
Net Weight	1/2	Pound

MATERIALS:

Body	Stainless Steel
Center Electrode	Stainless Steel
Insulation (Except BNC Connector)	Alumina Ceramic
Neutron Sensitive Material:	
Content	U_3O_8 enriched to more than 90% in U-235
Total Quantity	0.0017 grams
Gas Filling	Argon-Nitrogen Mixture

IMPEDANCE:

Resistance	10^9	Ohms
Capacitance	55	$\mu\mu f$

MAXIMUM RATINGS:

Voltage Between Electrodes	500	Volts
Temperature	125	Degrees C
External Pressure (Note 2)	180	Pounds/Inch^2

TYPICAL OPERATION:

Operating Voltage	250	Volts
Operating Voltage Plateau	250 to 500	Volts
Thermal Neutron Flux Range	10^3 nv to 10^8 nv	
Sensitivity (Note 3)	1.25×10^{-3}	cps/nv
Output Pulse Characteristics:		
Amplitude	10^{-4}	Volts
Inherent Rise Time	2×10^{-7}	Seconds

1. In operation of the unit partially immersed, care must be taken to keep the connector free of water.
2. If the connector end of the detector is exposed to pressure, the pressurizing atmosphere must be dry.
3. The sensitivity is a function of the setting of the pulse height selector on the associated equipment. See figure 1.

COUNTER SENSITIVITY AS A FUNCTION OF PULSE HEIGHT

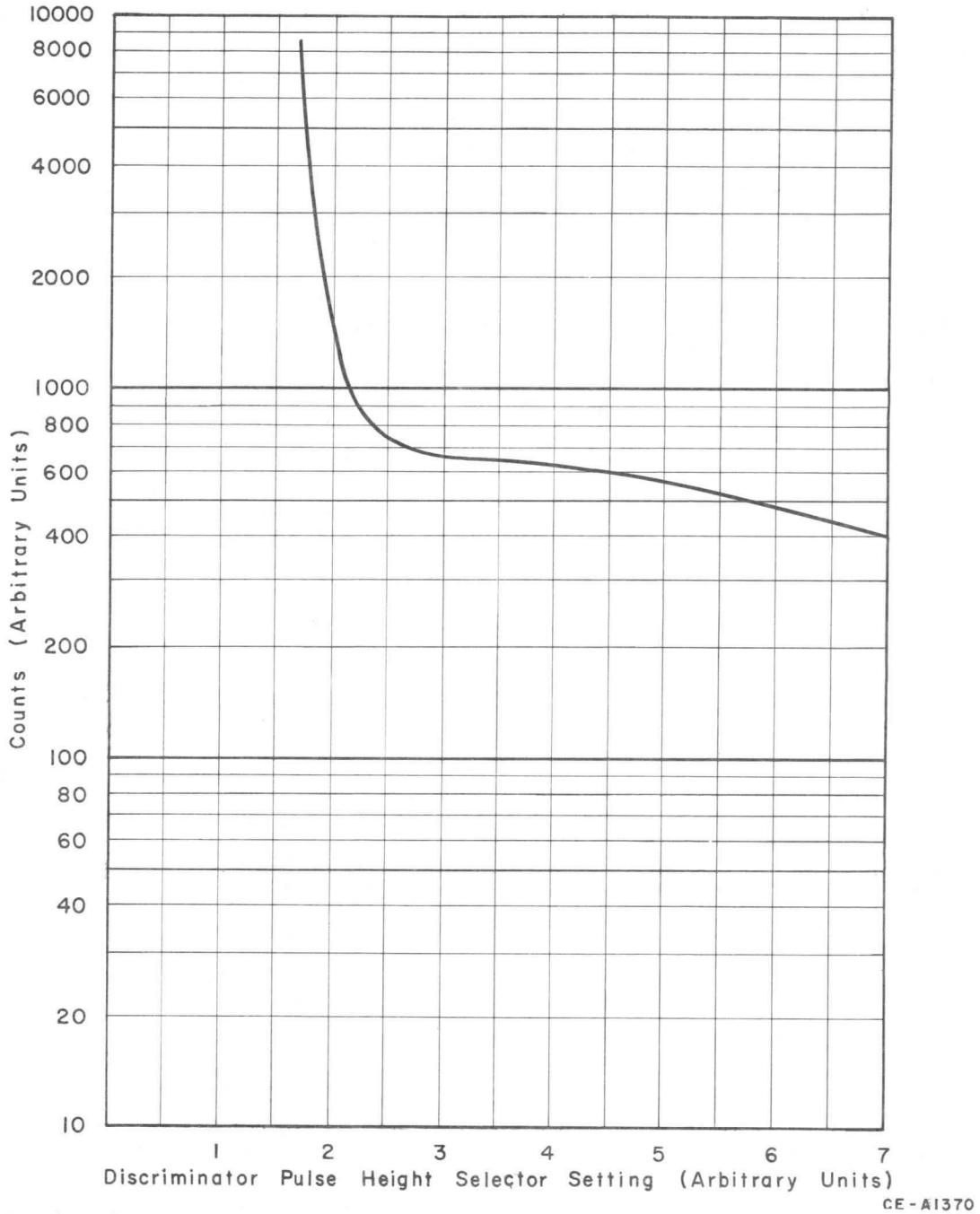

FIGURE 1

March 15, 1960

FISSION COUNTER TYPE 7187

The 7187 fission counter is designed to detect thermal neutrons in the range of 2 to 2 x 10^5 neutrons/cm^2/second. The characteristics are such that the 7187 has a flatter integral bias characteristic than that available with dual range fission chambers. This has been achieved at the expense of an increased gamma response. For this reason the detector finds primary application in critical facilities, where the gamma is inherently low, and day to day reproducibility of readings is important. The 7187 is extremely rugged, meeting MIL-S-901 for shock and MIL-Std-167 (type 1) for vibration, and may be operated in any position at temperatures up to 300°F.

The 7187 consists of an aluminum outer case and electrodes, with high purity alumina ceramic insulators throughout, including those used in the type HN coaxial connector. In typical operation, the counter has a thermal neutron sensitivity of 0.52 counts/neutron/cm^2 throughout a wide range of applied voltage.

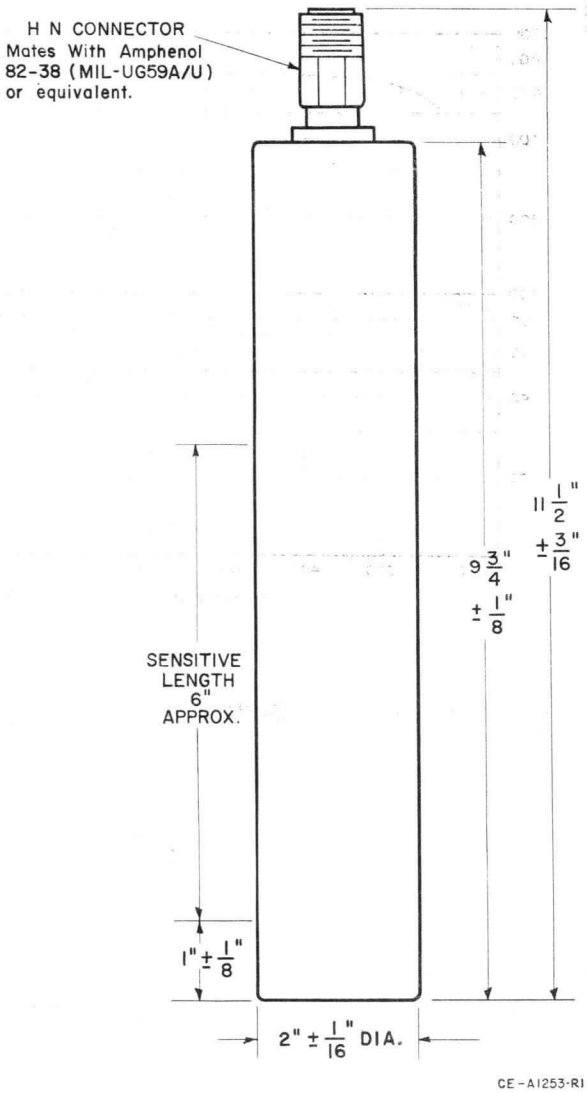

MECHANICAL:		
Maximum Diameter	2-1/16	Inches
Maximum Overall Length	11-11/16	Inches
Approximate Sensitive Length	6	Inches
Net Weight	1-3/4	Pounds
Shipping Weight	12	Pounds
MATERIALS:		
Outer Case		Aluminum
Electrodes		Aluminum
Insulation		Alumina Ceramic
Neutron Sensitive Material:		
Content	U_3O_8 Enriched to more than 90% in U-235	
Thickness		1.0 mg/cm^2
Total Quantity		0.86 Grams
Gas Filling		Argon-Nitrogen Mixture
Gas Pressure		220 Cm of Hg
IMPEDANCE:		
Resistance (minimum)	10^9	Ohms
Capacitance	190	$\mu\mu f$
MAXIMUM RATINGS:		
Voltage Between Electrodes	1000	Volts
Temperature	300	Degrees F
External Pressure (Note 2)	180	Pounds/$Inch^2$
Thermal Neutron Flux	3 x 10^{10}	nv
TYPICAL OPERATION: (Note 1)		
Operating Voltage	300	Volts
Operating Voltage Plateau (See Figure 2)	200 to 800	Volts
Thermal Neutron Flux Range	2 to 2 x 10^5	nv
Sensitivity (Note 1)	0.52	CPS/nv
Output Pulse Characteristics:		
Amplitude (unloaded)	2 x 10^{-4}	Volts
Inherent Rise Time (average)	2 x 10^{-7}	Seconds

1. The sensitivity is 0.52 counts/neutron/cm^2 when the alpha background counting rate of the naturally radioactive uranium is adjusted to 5 counts/second. By varying the pulse height selector on the associated circuitry other sensitivities are available. See Figure 1, and the section entitled "Fission Counter Operation".

2. The pressurizing atmosphere must be dry and non-corrosive.

COUNTER SENSITIVITY AS FUNCTION OF PULSE HEIGHT SETTING

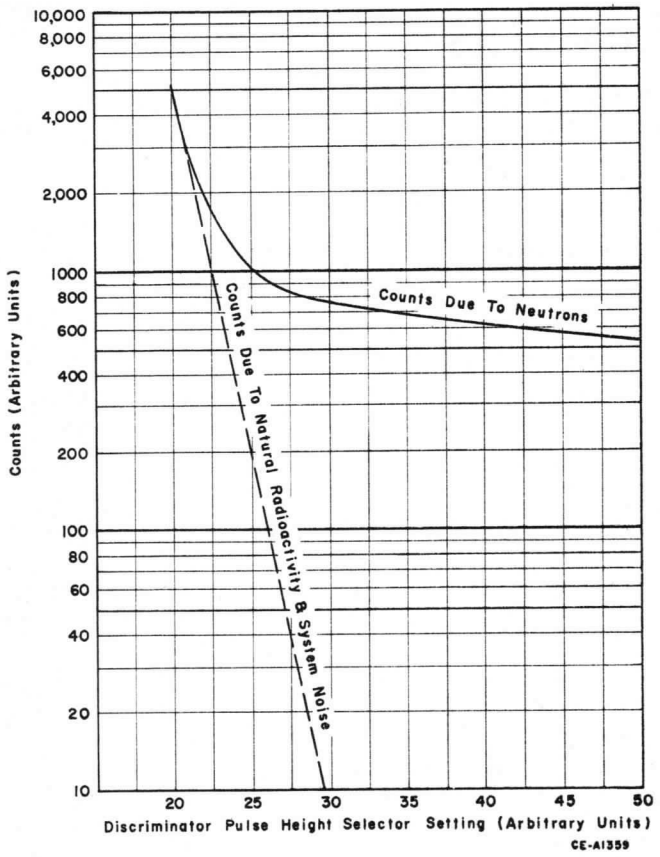

FIGURE 1

COUNTING RATE CHARACTERISTIC

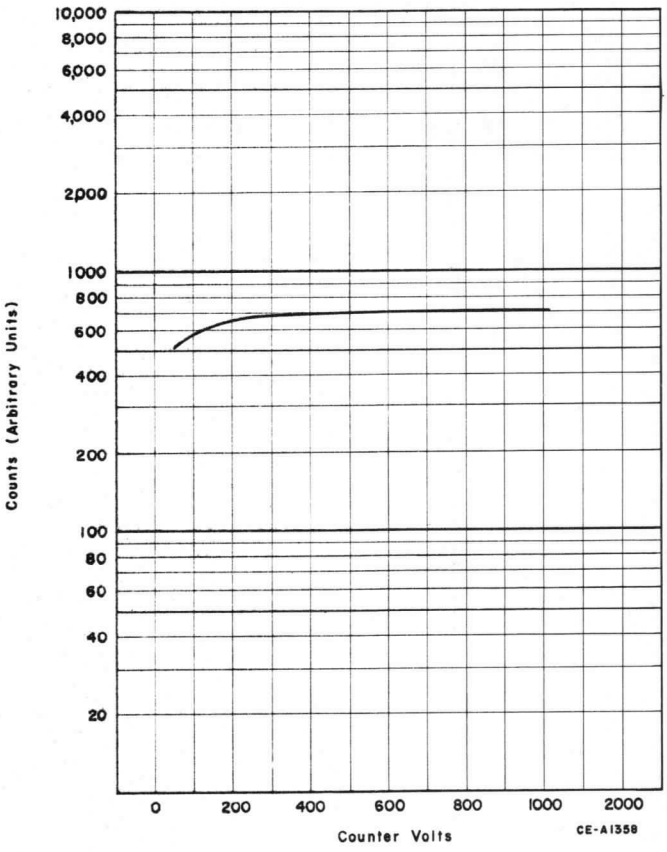

FIGURE 2

April 1, 1960

DUAL RANGE FISSION CHAMBER TYPE 7188

The 7188 fission chamber is designed to detect thermal neutrons in the range of 1.4 x 10 to 1.4 x 10^6 neutrons/cm^2/second when operated as a counter, and in the range of 4 x 10^6 to 1.4 x 10^{11} neutrons/cm^2/second when operated as a chamber. The detector is extremely rugged in construction, meeting MIL-S-901 for shock and MIL-Std-167 (Type 1) for vibration, and may be operated in any position at temperatures up to 300°F.

The 7188 consists of an aluminum outer case and electrodes, with high purity alumina ceramic insulators throughout, including those used in the type HN coaxial connector. In typical operation as a fission counter the 7188 has a thermal neutron sensitivity of approximately 0.07 counts/neutron/cm^2 throughout a wide range of applied voltage. When connected for service as an ionization chamber, the thermal neutron sensitivity is approximately 1.4 x 10^{-14} amperes/neutron/cm^2/second with a gamma sensitivity of approximately 4.2 x 10^{-11} amperes/R/hour.

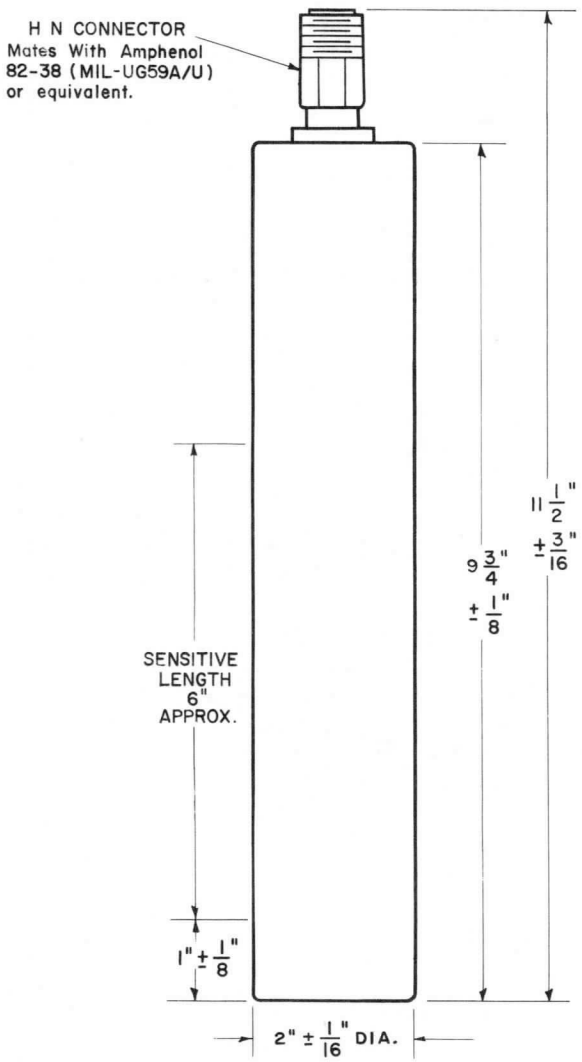

MECHANICAL:		
Maximum Diameter	2-1/16	Inches
Maximum Overall Length	11-11/16	Inches
Approximate Sensitive Length	6	Inches
Net Weight	1-3/4	Pounds
Shipping Weight	12	Pounds
MATERIALS:		
Outer Case		Aluminum
Electrodes		Aluminum
Insulation		Alumina Ceramic
Neutron Sensitive Material:		
Content	U_3O_8 enriched to more than 90% in U-235	
Thickness		0.2 mg/cm^2
Total Quantity		0.086 gm
Gas Filling		Argon-Nitrogen mixture
Gas Pressure		76 cm of Hg
IMPEDANCE:		
Resistance (minimum)	10^9	Ohms
Capacitance	190	$\mu\mu f$
MAXIMUM RATINGS:		
Voltage Between Electrodes	1000	Volts
Temperature	300	Degrees F
External Pressure (Note 2)	180	Pounds/Inch^2
Thermal Neutron Flux	2 x 10^{11}	nv
TYPICAL OPERATION AS A COUNTER: (Note 1)		
Operating Voltage	300	Volts
Operating Voltage Plateau (See Figure 2)	200 to 800	Volts
Thermal Neutron Flux Range	1.4 x 10 to 1.4 x 10^6	nv
Sensitivity	0.07	cps/nv
Output Pulse Characteristics:		
Amplitude (unloaded)	2 x 10^{-4}	Volts
Inherent Rise Time (average)	2 x 10^{-7}	Seconds
TYPICAL OPERATION AS A CHAMBER:		
Operating Voltage (Note 3)	300 to 1000	Volts
Saturation Characteristics (Note 3)		
Thermal Neutron Flux Range (Note 4)		nv
	4 x 10^6 to 1.4 x 10^{11}	nv
Thermal Neutron Sensitivity	1.4 x 10^{-14}	Amperes/nv
Gamma Sensitivity	4.2 x 10^{-11}	Amperes/R/hr

1. The sensitivity is 0.07 counts/neutron/cm^2 when the alpha background counting rate of the naturally radioactive uranium is adjusted to 5 counts/second. By varying the pulse height selector on the associated circuitry other sensitivities are available. See Figure 1 and the section entitled "Fission Counter Operation".
2. The pressurizing atmosphere must be dry and non-corrosive.
3. The minimum voltage required for saturation is dependent upon the incident neutron flux level. See Figure 3.
4. The lower limit of operating range is determined by an inherent alpha background current of approximately 1.4×10^{-8} amperes.

COUNTER SENSITIVITY AS FUNCTION OF PULSE HEIGHT SETTING

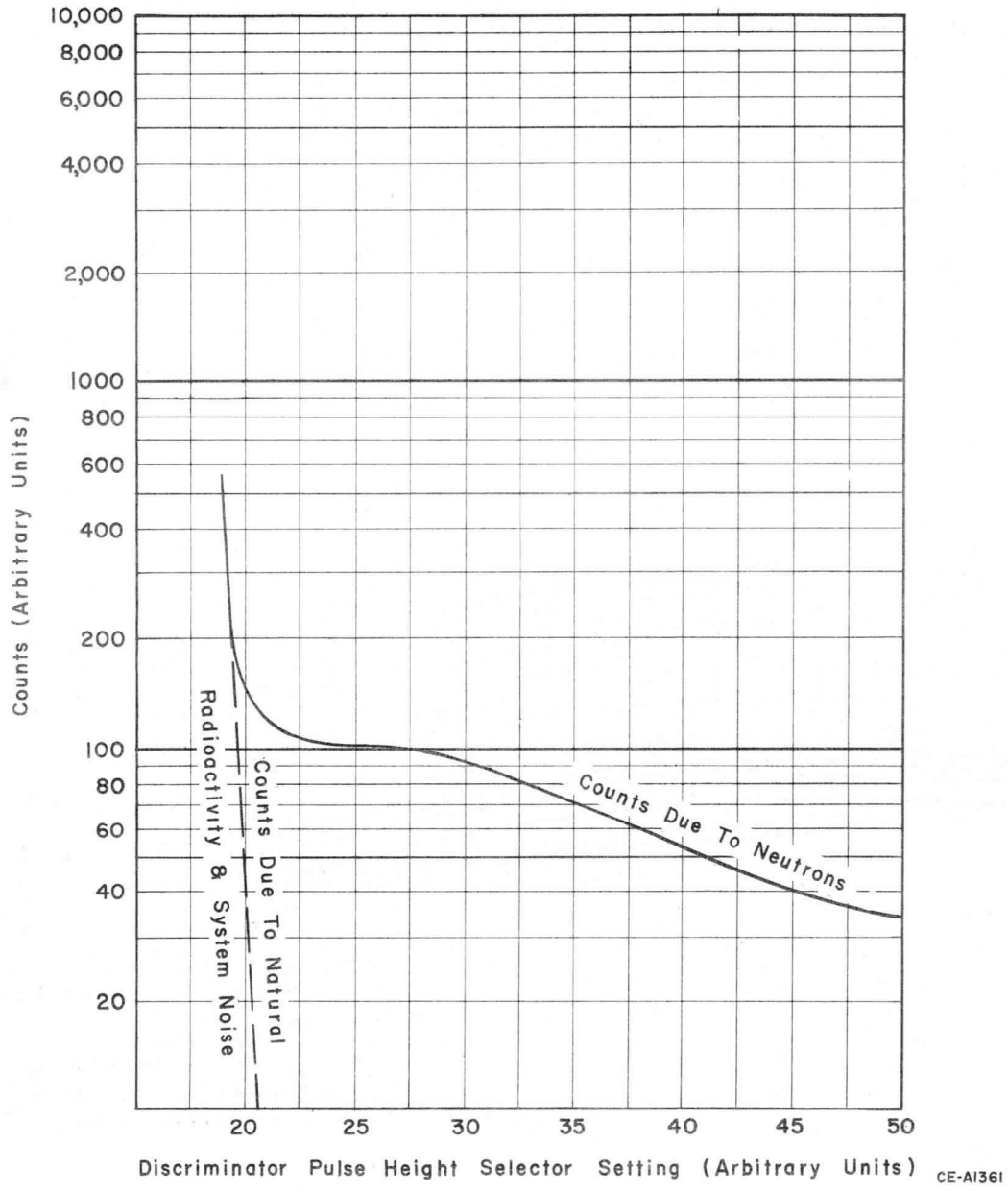

FIGURE 1

COUNTING RATE CHARACTERISTIC

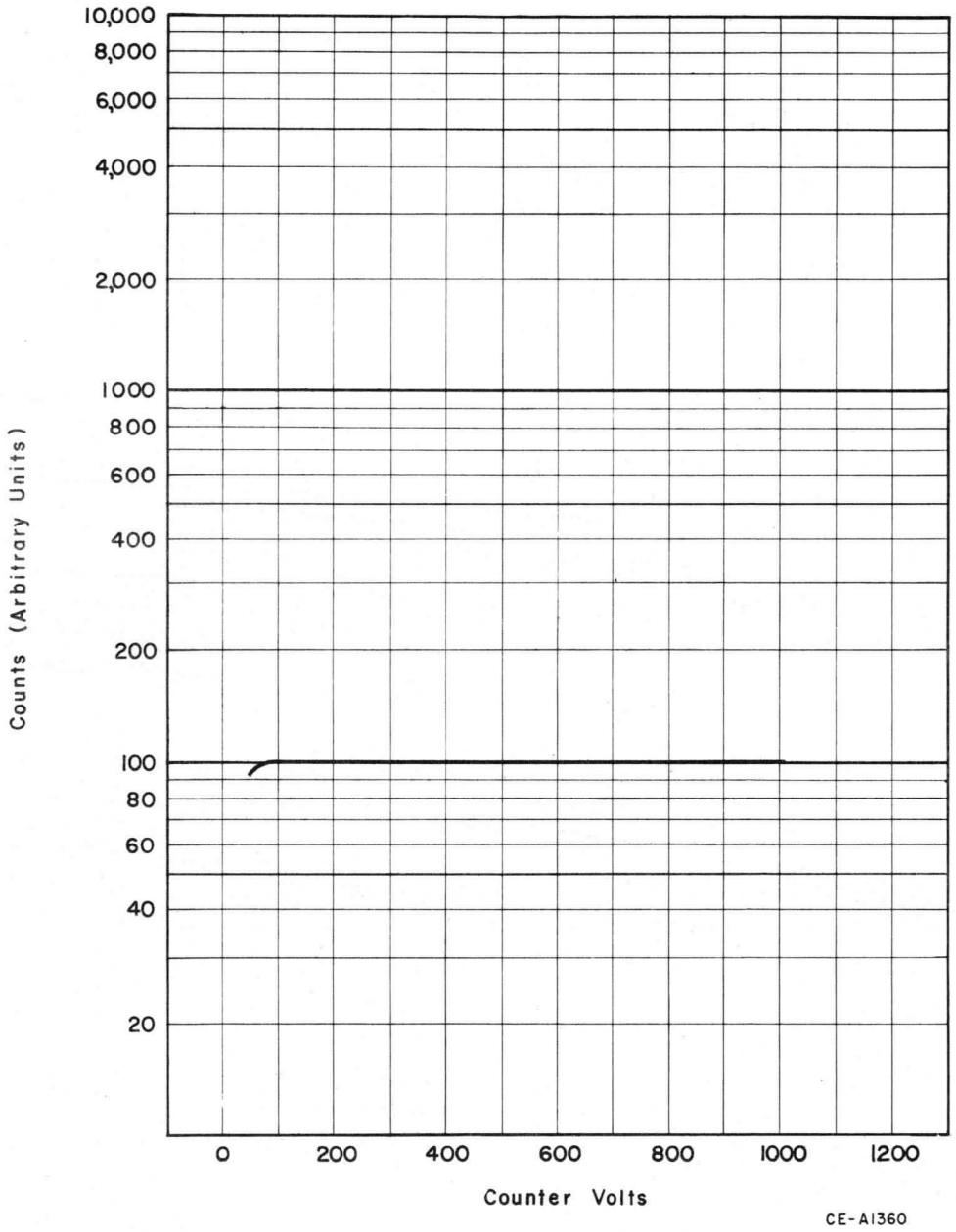

FIGURE 2

Westinghouse®

7243

March 1, 1960

BF_3 PROPORTIONAL COUNTER TYPE 7243

The 7243 proportional counter is designed to detect neutrons of thermal energy in the range from 7.5×10^{-2} to 7.5×10^{3} neutron/cm^2/second. It is a multi-unit BF_3 proportional counter, in which the elemental detectors are hermetically sealed within the outer case. The counter is extremely rugged, meeting military specification MIL-S-901 for shock and MIL-Std-167 (type 1) for vibration, and will operate in any position at temperatures up to 175°F.

The 7243 consists of three type 6307 proportional counters rigidly held within a heavy walled outer case, and terminating in a single type HN connector. The materials used in the detector, including the connector, have been selected for low activation properties, thereby facilitating handling after exposure to neutron fluxes. The thermal neutron sensitivity of the 7243 is approximately 13 counts/neutron/cm^2 at an operating voltage of 2000 volts.

MECHANICAL:

Maximum Diameter	2-15/16	Inches
Maximum Overall Length	15-3/4	Inches
Approximate Sensitive Length	8-5/8	Inches
Net Weight	3-1/8	Pounds
Shipping Weight	8	Pounds

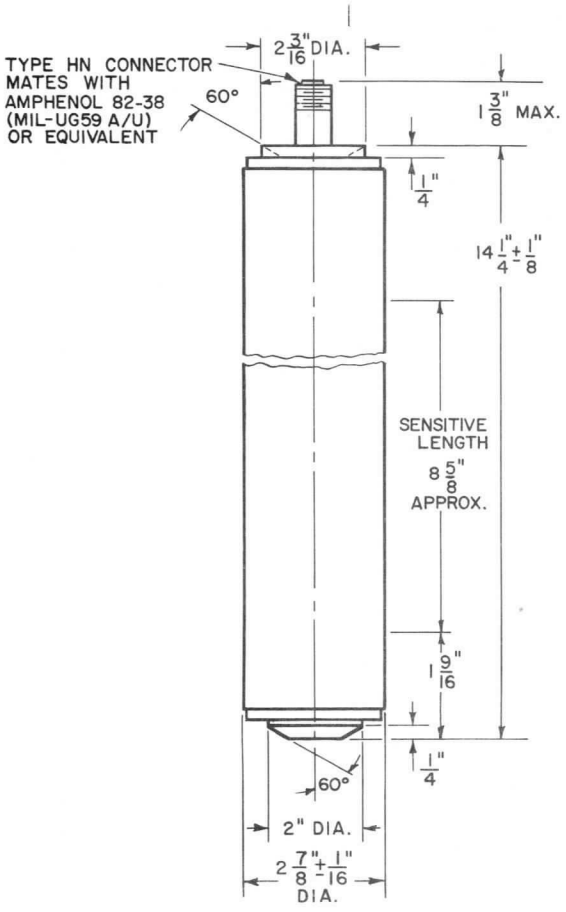

MATERIALS:

Outer Case	Aluminum
Element Body	EC Grade Aluminum
Electrodes	0.001 Inch Dia. Tungsten
Connector	Magnesium
Insulation	Alumina
Neutron Sensitive Material:	
Content	Boron trifluoride enriched to 96% in Boron -10
Pressure	55 Cm of Hg

IMPEDANCE:

Resistance (minimum)	10^{10}	Ohms
Capacitance	30	$\mu\mu f$

MAXIMUM RATINGS:

Voltage Between Electrodes	2500	Volts
Temperature	175	Degrees F
External Pressure (Note 3)	130	Pounds/$Inch^2$
Operating:		
Thermal Neutron Flux	4×10^{4}	nv
Non-Operating:		
Thermal Neutron Flux (Note 1)	10^{10}	nv
Gamma Flux (Note 1)	10^{5}	R/hr

TYPICAL OPERATION: (Note 2)

Operating Voltage	2000	Volts
Thermal Neutron Flux Range	$.7.5 \times 10^{-2}$ to 7.5×10^{3}	nv
Sensitivity	13	CPS/nv
Plateau Characteristics:		
Length (minimum)	200	Volts
Overall Slope (maximum)	4	Per-cent
Output Pulse Characteristics:		
Amplitude (approx. unloaded)	60	Millivolts
Inherent Rise Time (Average)	10^{-7}	Seconds
Inherent Background (Note 4)	0.4	Counts/Second

1. When in radiation levels exceeding the maximum operating levels the high voltage should be removed and the tube shorted through a maximum of three megohms. See the section entitled "Proportional Counter Operation".
2. These characteristics will vary depending upon the associated circuitry. For application details see the section entitled "Proportional Counter Operation".
3. The pressurizing atmosphere must be dry and non-corrosive.
4. The tube may not be immersed in water. High humidity environments should be avoided as they may impair performance.

March 1, 1960

BF_3 PROPORTIONAL COUNTER TYPE 7317

The 7317 proportional counter is designed to detect neutrons of thermal energy in the range from 7.5×10^{-2} to 7.5×10^{3} neutrons/cm^2/second. The counter is extremely rugged, meeting military specification MIL-S-901 for shock and MIL-Std-167 (type 1) for vibration, and will operate in any position at temperatures up to 225° F.

The materials used in the construction of the detector have been selected for low activation properties, thereby facilitating handling after exposure to neutron fluxes. The thermal neutron sensitivity of the 7317 is approximately 13 counts/neutron/cm^2 at an operating voltage of 2000 volts.

The 7317 is similar to the 6998, differing only in having a flying lead instead of a coaxial connector.

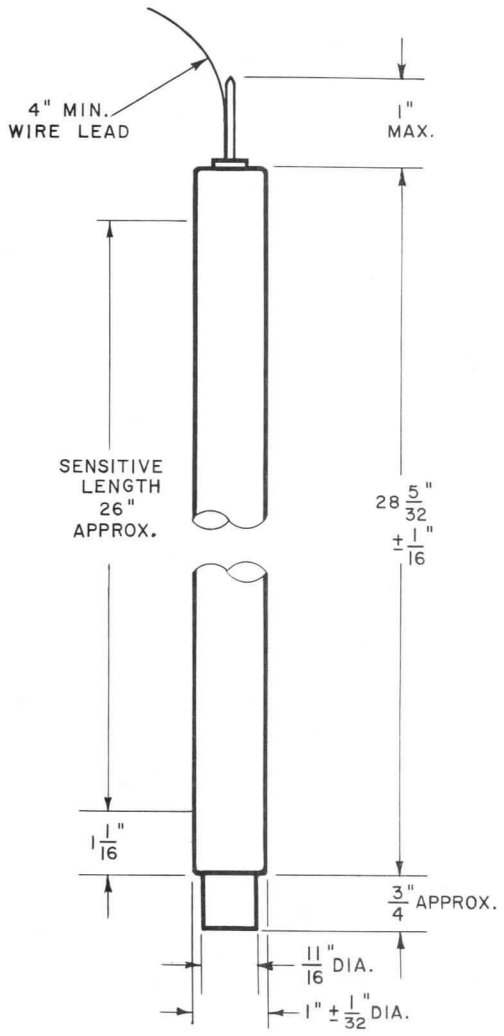

MECHANICAL:		
Maximum Diameter	1-1/32	Inches
Maximum Overall Length	30	Inches
Approximate Sensitive Length	26	Inches
Net Weight	9	Ounces
Shipping Weight	5	Pounds
MATERIALS:		
Body	EC Grade Aluminum	
Electrode	0.001 Inch Dia. Tungsten	
Insulation	Alumina Ceramic	
Neutron Sensitive Material:		
Content	Boron trifluoride enriched to 96% in Boron -10	
Pressure	55 Cm of Hg	
IMPEDANCE:		
Resistance (minimum)	10^{11}	Ohms
Capacitance	15	$\mu\mu f$
MAXIMUM RATINGS:		
Voltage Between Electrodes	2500	Volts
Temperature	225	°F
External Pressure (Note 3)	180	Pounds/$Inch^2$
Operating:		
Thermal Neutron Flux	4×10^{4}	nv
Non-Operating:		
Thermal Neutron Flux (Note 1)	10^{10}	nv
Gamma Flux (Note 1)	10^{5}	R/hr
TYPICAL OPERATION: (Note 2)		
Operating Voltage	2000	Volts
Thermal Neutron Flux Range	7.5×10^{-2} to 7.5×10^{3}	nv
Sensitivity	13	CPS/nv
Plateau Characteristics:		
Length (minimum)	200	Volts
Overall Slope (maximum)	4	Per-cent
Output Pulse Characteristics:		
Amplitude (approx. unloaded)	60	Millivolts
Inherent Rise Time (average)	10^{-7}	Seconds
Inherent Background (Note 4)	0.3	Counts/Second

1. When in flux levels exceeding the maximum operating level the high voltage should be removed and the detector shorted through a maximum of three megohms. See the section entitled "Proportional Counter Operation".
2. These characteristics will vary depending upon the associated circuitry. For application details see the section entitled "Proportional Counter Operation".
3. The pressurizing atmosphere must be dry and non-corrosive.
4. High humidity environments should be avoided since they may impair performance.

May 1, 1960

COMPENSATED IONIZATION CHAMBER TYPE 7353

The 7353 compensated ionization chamber is designed to detect thermal neutrons in the range from 2.5×10^2 to 2.5×10^{10} neutrons/cm^2/second, in the presence of very high gamma radiation fields. The detector is extremely rugged in construction, meeting MIL-S-901 for shock and MIL-Std-167 (type 1) for vibration, and may be operated in any position at temperatures up to 175°F. The 7353, including the connectors, is constructed of magnesium alloy, with high stability, crosslinked polystyrene insulation. The use of this latter material assures completely noise free performance of the detector, even in the lowest decade of operation.

The 7353 incorporates two outstanding features. The first is the use of guard ring construction throughout to minimize the reduction in signal currents due to electrical leakage of the insulators. The second is the provision for continuously variable, electrical compensation. This feature provides any desired degree of reduction of the signal caused by gamma radiation, including complete cancellation.

The thermal neutron sensitivity of the 7353 s approximately 4×10^{-14} amperes/neutron/cm^2/second. The gamma sensitivity, when operated uncompensated, is approximately 3×10^{-11} amperes/R/hour.

The 7353 is similar to the 6377, differing only in outline dimensions.

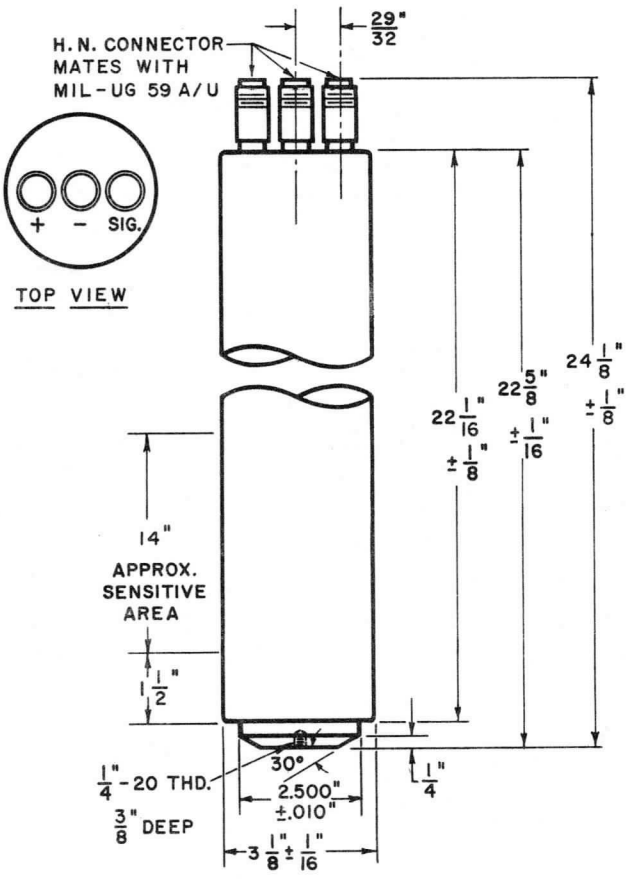

MECHANICAL:

Maximum Diameter	3-3/16	Inches
Maximum Overall Length	24-1/4	Inches
Approximate Sensitive Length	14	Inches
Net Weight	5-3/8	Pounds
Shipping Weight	19	Pounds

MATERIALS:

Outer Case	3% Al, 97% Mg Alloy
Electrodes	3% Al, 97% Mg Alloy
Insulation	Stabilized Polystyrene
Neutron Sensitive Material:	
Content	Boron enriched in B-10
Thickness	1 mg/cm^2
Gas Filling	Nitrogen

IMPEDANCE:

Resistance: (Note 2)		
Signal Electrode to Case (Minimum)	10^{14}	Ohms
H.V. Electrode to Case (Minimum)	10^{12}	Ohms
Compensating Electrode to Case (Minimum)	10^{12}	Ohms
Capacitance: (Note 1)		
Signal Electrode to Case (Approx.)	275	$\mu\mu$f
H.V. Electrode to Case (Approx.)	315	$\mu\mu$f
Compensating Electrode to Case (Approx.)	125	$\mu\mu$f

MAXIMUM RATINGS:

Voltage Between Electrodes (dc)	1500	max.	Volts
Temperature	175	max.	Degrees F
External Pressure (Note 3)	180	max.	Pounds/Inch^2
Thermal Neutron Flux	5×10^{11}	max.	nv

TYPICAL OPERATION:

Typical Connection	See Figure 1	
Operating Voltage	300 to 800	Volts
Compensating Voltage (See Figure 3)	−10 to −80	Volts
Saturation Characteristics	See Figure 2	
Thermal Neutron Flux Range	2.5×10^{2} to 2.5×10^{10}	nv
Thermal Neutron Sensitivity	4×10^{-14}	Amperes/nv
Gamma Sensitivity:		
Total Compensation	zero	
Uncompensated	3×10^{-11}	Amperes/R/hour

NOTES

1. Capacitance is measured between an electrode and case, with all other electrodes grounded.
2. The detector may not be immersed directly in water, and high humidity environments should be avoided as they will impair performance.
3. The pressurizing atmosphere must be dry and non-corrosive.

TYPICAL CONNECTION DIAGRAM

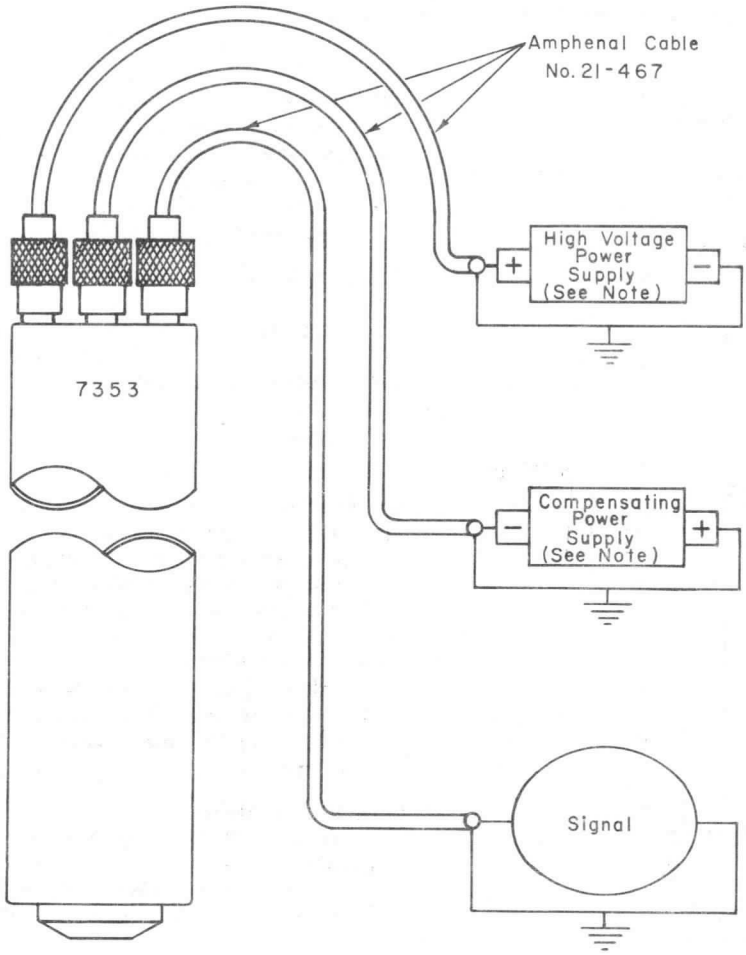

Note: Permissible power supply regulation and ripple will depend upon the particular application. See Section entitled "Ionization Chamber Operation."

FIGURE 1

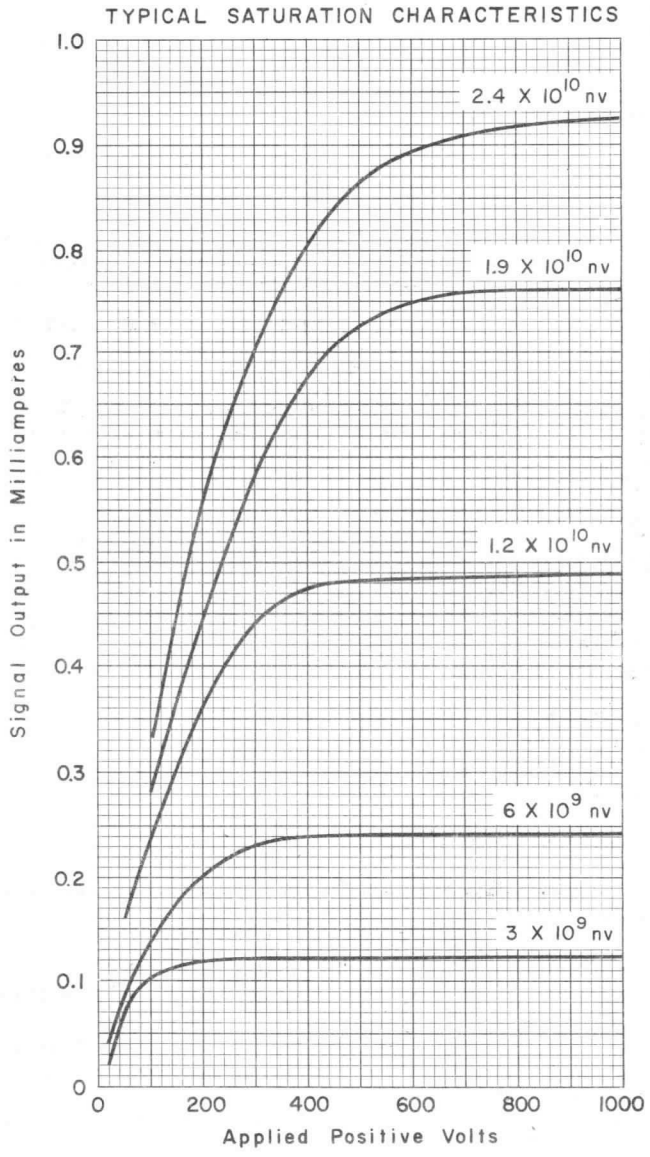
TYPICAL SATURATION CHARACTERISTICS
Signal Output in Milliamperes
1.0
0.9
0.8
0.7
0.6
0.5
0.4
0.3
0.2
0.1
0
2.4 X 10^10 nv
1.9 X 10^10 nv
1.2 X 10^10 nv
6 X 10^9 nv
3 X 10^9 nv
0
200
400
600
800
1000
Applied Positive Volts
CE-A1284 R2

FIGURE 2

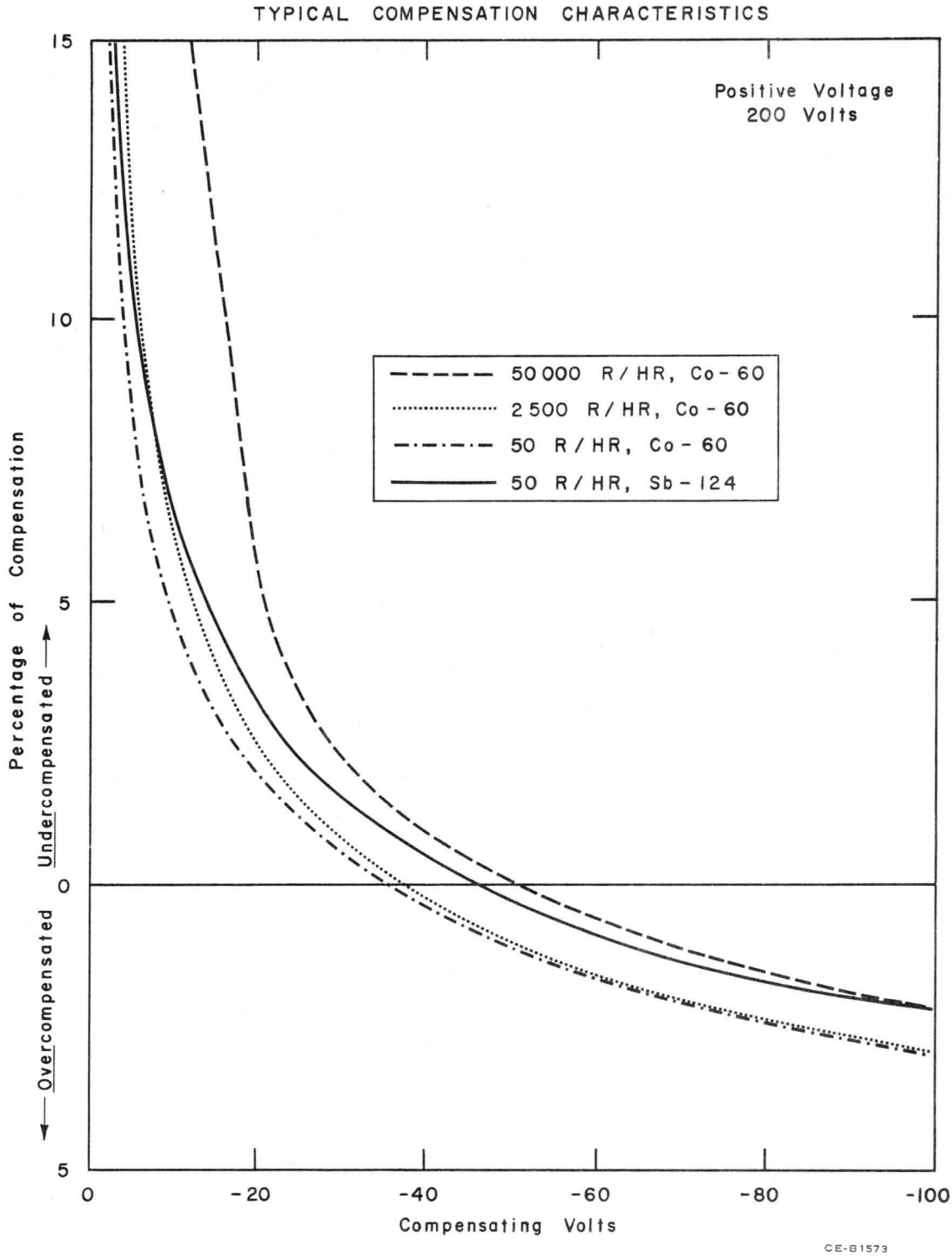
TYPICAL COMPENSATION CHARACTERISTICS
Positive Voltage
200 Volts
50 000 R/HR, Co-60
2 500 R/HR, Co-60
50 R/HR, Co-60
50 R/HR, Sb-124
Percentage of Compensation
Undercompensated
Overcompensated
15
10
5
0
5
0
-20
-40
-60
-80
-100
Compensating Volts
CE-B1573

FIGURE 3

Westinghouse

WL-7429
WL-7429A

November 1, 1961

HIGH SENSITIVITY BF_3 PROPORTIONAL COUNTER
TYPES 7429 AND 7429A

The 7429 proportional counter is designed to detect neutrons of thermal and intermediate energies in the range from 1.25×10^{-2} to 1.25×10^{4} neutrons/cm^2/second. It is a multi-unit BF_3 proportional counter in which the outer case is electrically insulated from the elements, thereby avoiding ground loop problems in circuitry. The detector is provided with an integral 12 foot length of RG 149/U coaxial cable. The cable and outer case are hermetically sealed, permitting operation in high-humidity environments. The 7429 is rugged in construction, meeting MIL-S-901 for shock and MIL-Std-167 (type 1) for vibration, and will operate in any position at temperature up to 175°F.

The detector consists of four type 7317 proportional counters surrounded by a polyethylene moderator block, and enclosed in a heavy walled aluminum outer case. The materials used in the detector have been selected for low activation properties, thereby facilitating handling after exposure to neutron fluxes. The thermal neutron sensitivity of the 7429 is approximately 40 counts/neutron/cm^2 at an operating voltage of 2000 volts.

The 7429A is similar to the 7429 differing only in having a cable length of 25 feet. Except for outer diameter and weight, the 7429 and 7429A are identical to the 7087 and 7087A respectively.

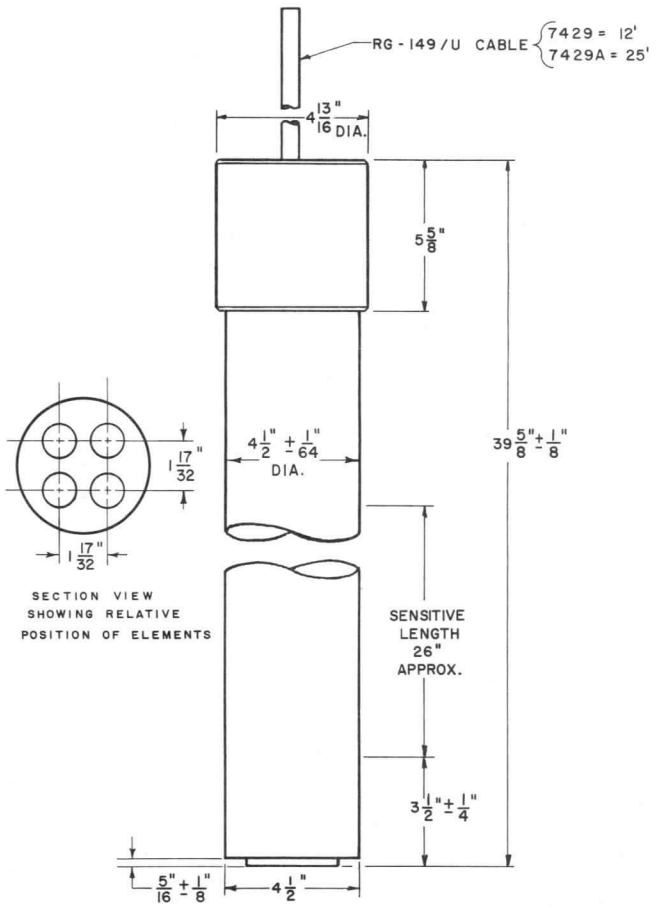

MECHANICAL:		
Maximum Diameter	4-13/16	Inches
Maximum Overall Length	39-3/4	Inches
Approximate Sensitive Length	26	Inches
Net Weight	34	Pounds
Shipping Weight	100	Pounds
Cable Length:		
7429	12	Feet
7429A	25	Feet
MATERIALS:		
Outer Case		Aluminum
Element Body		EC Grade Aluminum
Electrodes		0.001 Inch Dia. Tungsten
Insulation:		
Elemental Detectors		Alumina ceramic
Cable Connectors		Polystyrene
Cable		Polyethylene
Moderator		Polyethylene
Neutron Sensitive Material:		
Content	Boron trifluoride enriched to 96% in Boron -10	
Pressure		55 Cm of Hg
IMPEDANCE:		
Resistance (minimum)	10^{11}	Ohms
Capacitance:		
7429	344	$\mu\mu$f
7429A	610	$\mu\mu$f
MAXIMUM RATINGS:		
Voltage Between Electrodes	2500	Volts
Temperature	175	Degrees F
External Pressure (Note 3)	180	Pounds/Inch^2
Operating:		
Thermal Neutron Flux	1.25×10^4	nv
Non-Operating:		
Thermal Neutron Flux (Note 1)	10^{10}	nv
Gamma Flux (Note 1)	10^5	R/hr

TYPICAL OPERATION: (Note 2)

Operating Voltage	2000	Volts
Thermal Neutron Flux Range:		
With Conventional Circuitry	2.5×10^{-2} to 2.5×10^{3}	nv
With Special Circuitry (Note 4).	1.25×10^{-2} to 1.25×10^{4}	nv
Sensitivity	40	CPS/nv
Plateau Characteristics:		
Length (minimum)	200	Volts
Overall Slope (maximum)	4	Per-cent
Output Pulse Characteristics:		
Inherent Rise Time (Average)	10^{-7}	Seconds
Amplitude: (at cable end, approx. unloaded)		
7429	15	Millivolts
7429A	7.5	Millivolts
Inherent Background (Note 5)	0.25	Counts/second

1. When in radiation levels exceeding the maximum operating levels the high voltage should be removed and the tube shorted through a maximum of three megohms. See the section entitled "Proportional Counter Operation".
2. These characteristics will vary depending upon the associated circuitry. For application details see the section entitled "Proportional Counter Operation".
3. The pressurizing atmosphere must be dry and non-corrosive.
4. An extension of operating range of approximately the magnitude indicated may be obtained with the use of low-noise, high resolution circuitry.
5. In radiation free areas, and with low-noise circuitry, values of the order of 12 to 15 counts per minute have been observed.

HIGH TEMPERATURE UNCOMPENSATED IONIZATION CHAMBER TYPE WL-7606

The WL-7606 ionization chamber is designed to detect neutrons of thermal energy in the range from 2.5×10^{3} to 5.0×10^{10} neutrons/cm²/second. The chamber utilizes guard ring construction throughout, a feature which minimizes insulation leakage in low current devices. The WL-7606 is extremely rugged, being designed to pass MIL-S-901 for shock and Mil-Std-167 (Type 1) for vibration, and may be operated in any position at temperatures up to 300° C.

The chamber is constructed of an aluminum outer case and electrodes, with high purity alumina ceramic insulation, including that used in the type HN connectors. The WL-7606 design assures noise free operation throughout the working range of both neutron flux and temperature. The thermal neutron sensitivity of the WL-7606 is approximately 4.4×10^{-14} amperes neutron/cm²/second, with a gamma sensitivity of approximately 4.5×10^{-11} amperes/R/hour. The WL-7606 is similar to the WL-6937A, differing primarily in the temperature rating.

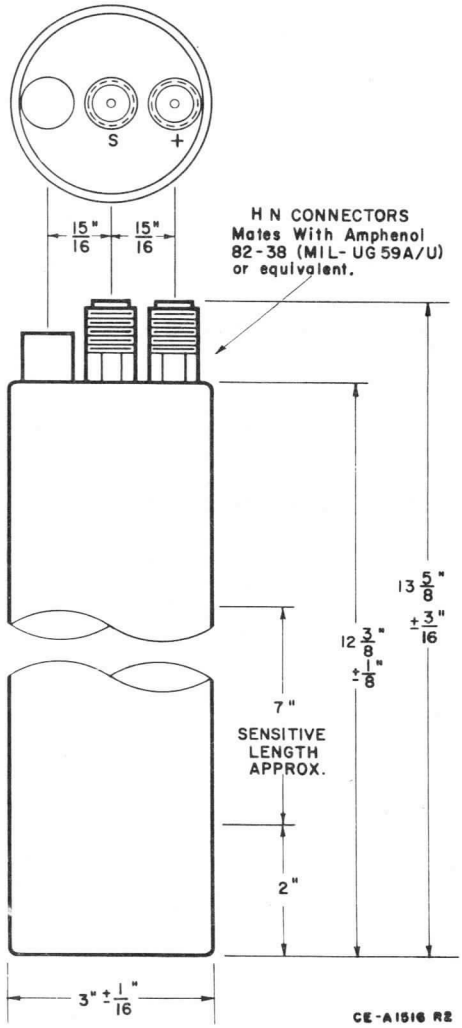

MECHANICAL

Diameter	3 ± 1/16	Inches
Overall Length	13-5/8 ± 3/16	Inches
Approximate Sensitive Length	7	Inches
Net Weight	2-1/2	Pounds
Shipping Weight	.10	Pounds

MATERIALS

Outer Case	Aluminum
Electrodes	Aluminum
Insulation	High Purity Alumina Ceramic
Neutron Sensitive Material	Boron Enriched in B-10
Gas Filling	Argon-Nitrogen Mixture

IMPEDANCE

Resistance:		
Signal Electrode to Case (@300° C)	10^{10}	Ohms
H.V. Electrode to Case (@300° C)	10^{10}	Ohms
Capacity		
Signal Electrode to Case (Note 3)	170	pF
H.V. Electrode to Case (Note 4)	250	pF

MAXIMUM RATINGS

Absolute Maximum Values

Voltage Between Electrodes	1500 max.	Volts
Temperature	300 max	°C
External Pressure (Note 2)	180 max.	Pounds/Inch²
Thermal Neutron Flux	10^{11} max.	nv

TYPICAL OPERATION See Figure 1

Operating Voltage (Note 1)	200 to 1000	Volts
Saturation Characteristics	See Figure 2	
Thermal Neutron Flux Range	2.5×10^{3} to 5.0×10^{10}	nv
Thermal Neutron Sensitivity, Unperturbed (Approx.) (Note 5)	4.4×10^{-14}	Amperes/nv
Thermal Neutron Sensitivity, Perturbed (Approx.) (Note 6)	8.7×10^{-14}	Amperes/nv
Gamma Sensitivity (Approx.)	4.5×10^{-11}	Amperes/R/Hr

NOTES

1. The voltage necessary to produce saturation varies with the neutron flux level. See Figure 2.
2. The pressurizing atmosphere must be dry and non-corrosive.
3. With H.V. electrode grounded to case.
4. With Signal electrode grounded to case.

5. The unperturbed thermal neutron sensitivity is the ratio of the output signal to the thermal neutron flux present in the volume to be occupied by the detector. The unperturbed sensitivity is normally determined by measuring the thermal neutron flux in a specified reactor volume and then inserting the detector into this volume and obtaining a signal output. The unperturbed sensitivity should be used when calculating the approximate detector signal resulting from exposure to an estimated reactor flux level.

6. The perturbed thermal neutron sensitivity is the ratio of the detector signal to the thermal neutron flux in the sensitive volume of the detector. This sensitivity is determined at Westinghouse in a paraffin lined, calibrated, source box containing a Pu-Be source. When using the perturbed sensitivity to calculate detector signal level the effects of flux depression by the detector and surrounding media (moderators and/or insertion mechanism) must be calculated so that the true perturbed flux value is known.

TYPICAL CONNECTION DIAGRAM

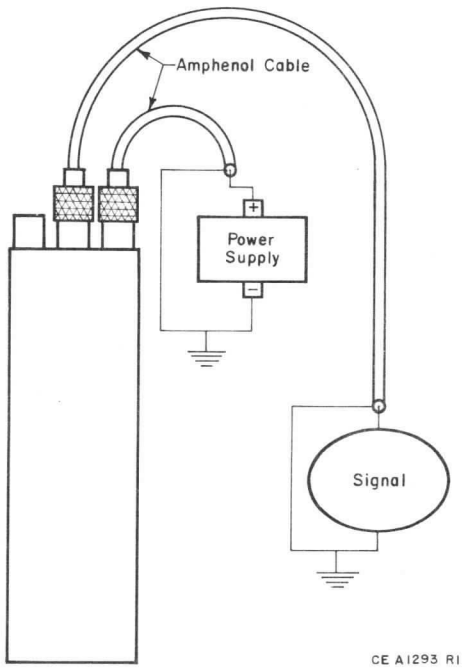

FIGURE 1

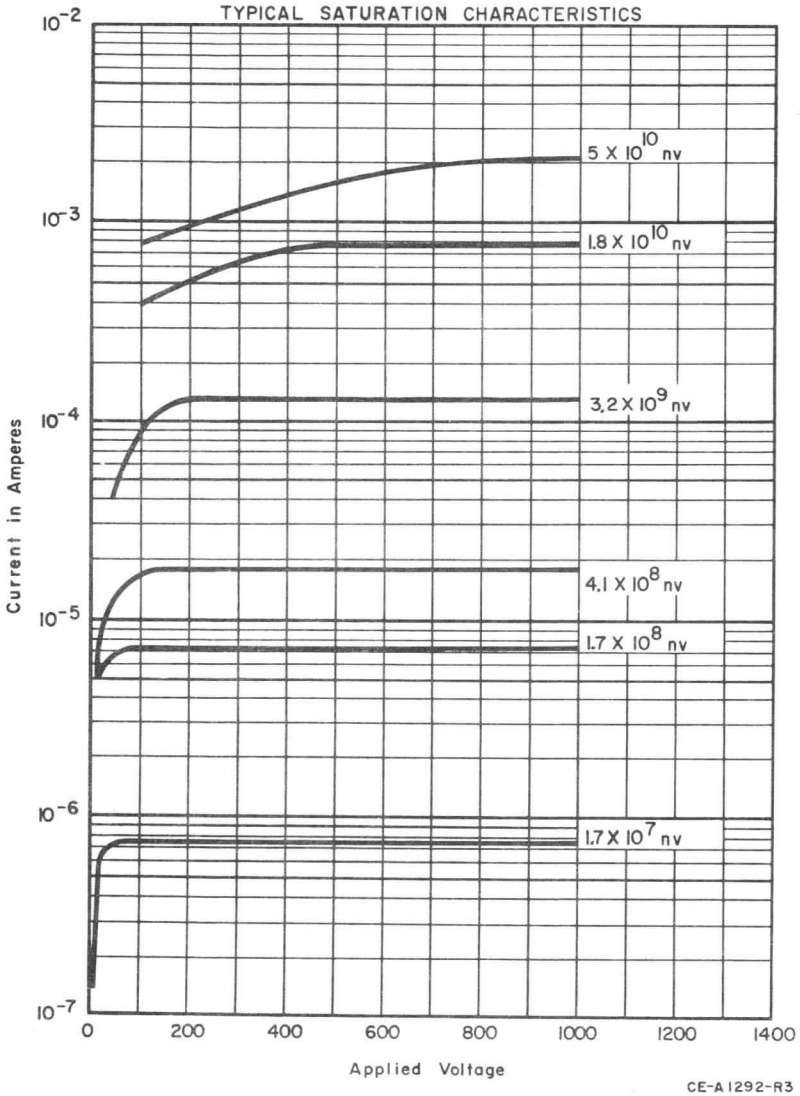

FIGURE 2

The information contained herein is supplied without assuming responsibility for infringement of patents or other rights of third parties which may result from its use. No license is granted by implication or otherwise under any patent or patent rights of Westinghouse Electric Corporation.

November 1, 1964

HIGH TEMPERATURE GUARD RING FISSION CHAMBER WL-7657

The WL-7657 fission chamber is designed to detect thermal neutrons in the range of 1.4 to 1.4 × 10^5 neutrons/cm^2/second. The detector is extremely rugged in construction designed to pass MIL-S-901 for shock and MIL-Std-167 (Type 1) for vibration. The WL-7657 is of guard ring construction, a feature which minimizes electrical leakage across the internal insulators, and it may be operated in any position at temperatures up to 300 °C.

The WL-7657 is constructed of aluminum, with high purity alumina ceramic insulators throughout, including those used in the type HN coaxial connectors. In typical operation, the counter has a thermal neutron sensitivity of 0.7 counts/neutron/cm^2 throughout a wide range of applied voltage.

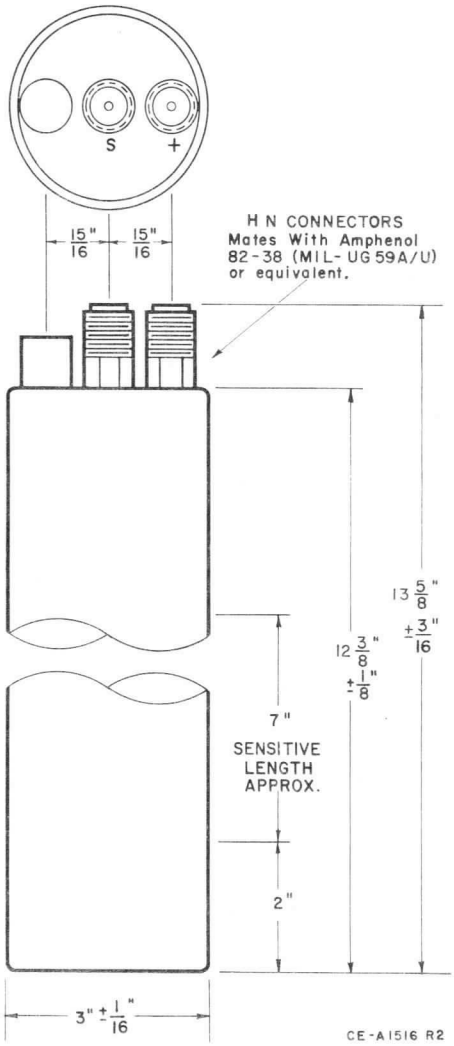

MECHANICAL:		
Maximum Diameter	3-1/16	Inches
Maximum Overall Length	13-13/16	Inches
Approximate Sensitive Length	7	Inches
Net Weight	2-1/2	Pounds
Shipping Weight	10	Pounds
MATERIALS:		
Element Body		Aluminum
Electrodes		Aluminum
Insulation		Hi-purity Alumina Ceramic
Neutron Sensitive Material:		
Content	U_3O_8 Enriched to more than 90% in U-235	
Thickness		2 mg/cm^2
Total Quantity of U-235		1.68 grams
Gas Filling		Argon-Nitrogen Mixture
Gas Pressure		76 Cm of Hg
IMPEDANCE:		
Resistance at 500°F (minimum)	10^9	Ohms
Capacitance:		
Signal Electrode to Case (approx.)	225	pf
High Voltage Electrode to Case (approx.)	160	pf
MAXIMUM RATINGS:		
Voltage Between Electrodes	1000	Volts
Temperature	300	°C
External Pressure (Note 2)	180	Pounds/$Inch^2$
Thermal Neutron Flux	10^{11}	nv
TYPICAL OPERATION: (Note 1)		
Operating Voltage	300	Volts
Operating Voltage Plateau (See Figure 2)	200 to 800	Volts
Thermal Neutron Flux Range	1.4 to 1.4 × 10^5	nv
Sensitivity (Note 1)	0.7	cps/nv
Output Pulse Characteristics:		
Amplitude (Unloaded)	2 × 10^{-4}	Volts
Inherent Rise Time (Average)	2 × 10^{-7}	Seconds

1. The sensitivity is 0.7 counts/neutron/cm^2 when the alpha background counting rate of the naturally radioactive uranium is adjusted to 5 counts/second. By varying the pulse height selector on the associated circuitry other sensitivities are available. See Figure 1, also the section entitled "Fission Counter Operation".
2. The pressurizing atmosphere must be dry and non-corrosive.

COUNTER SENSITIVITY AS FUNCTION OF PULSE HEIGHT SETTING

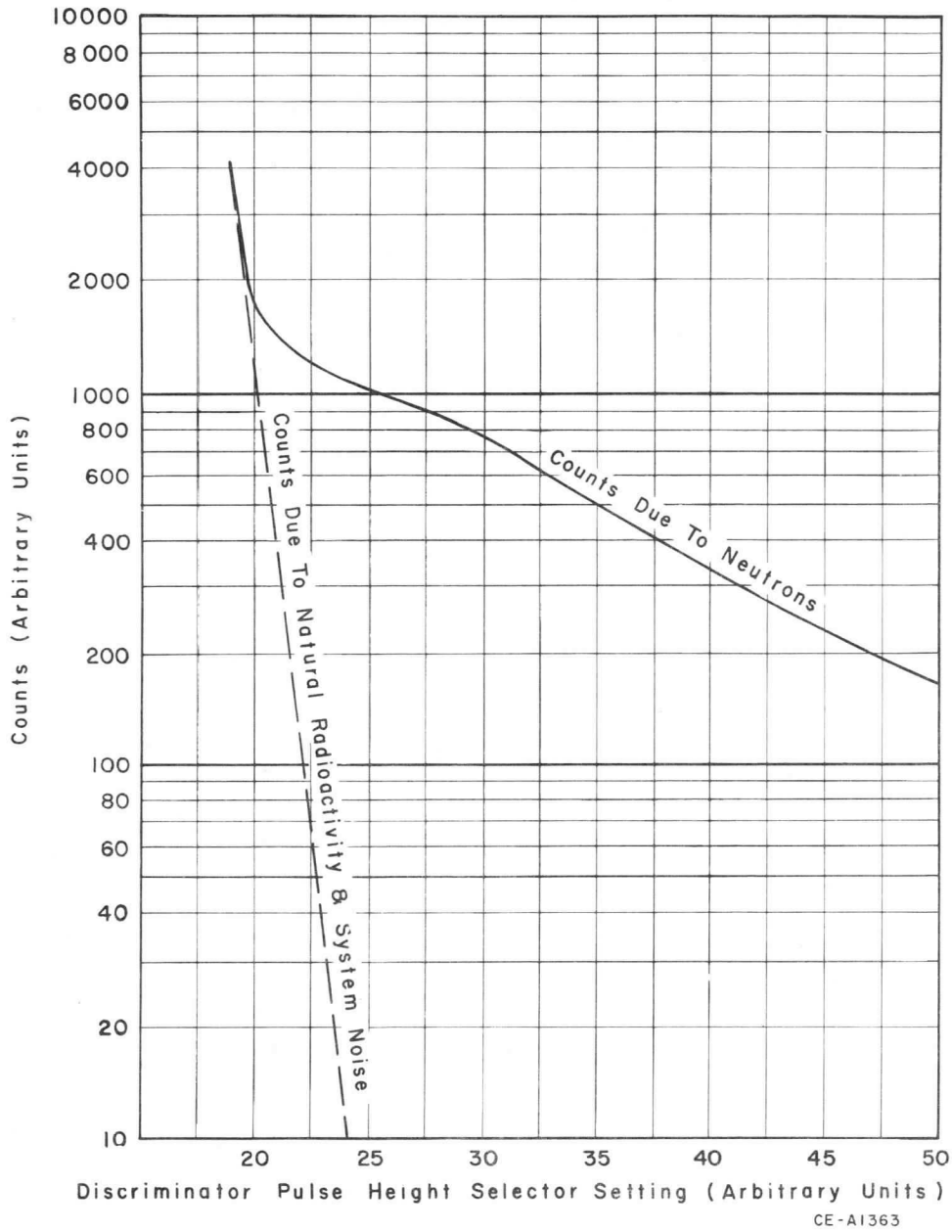

FIGURE 1

COUNTING RATE CHARACTERISTIC

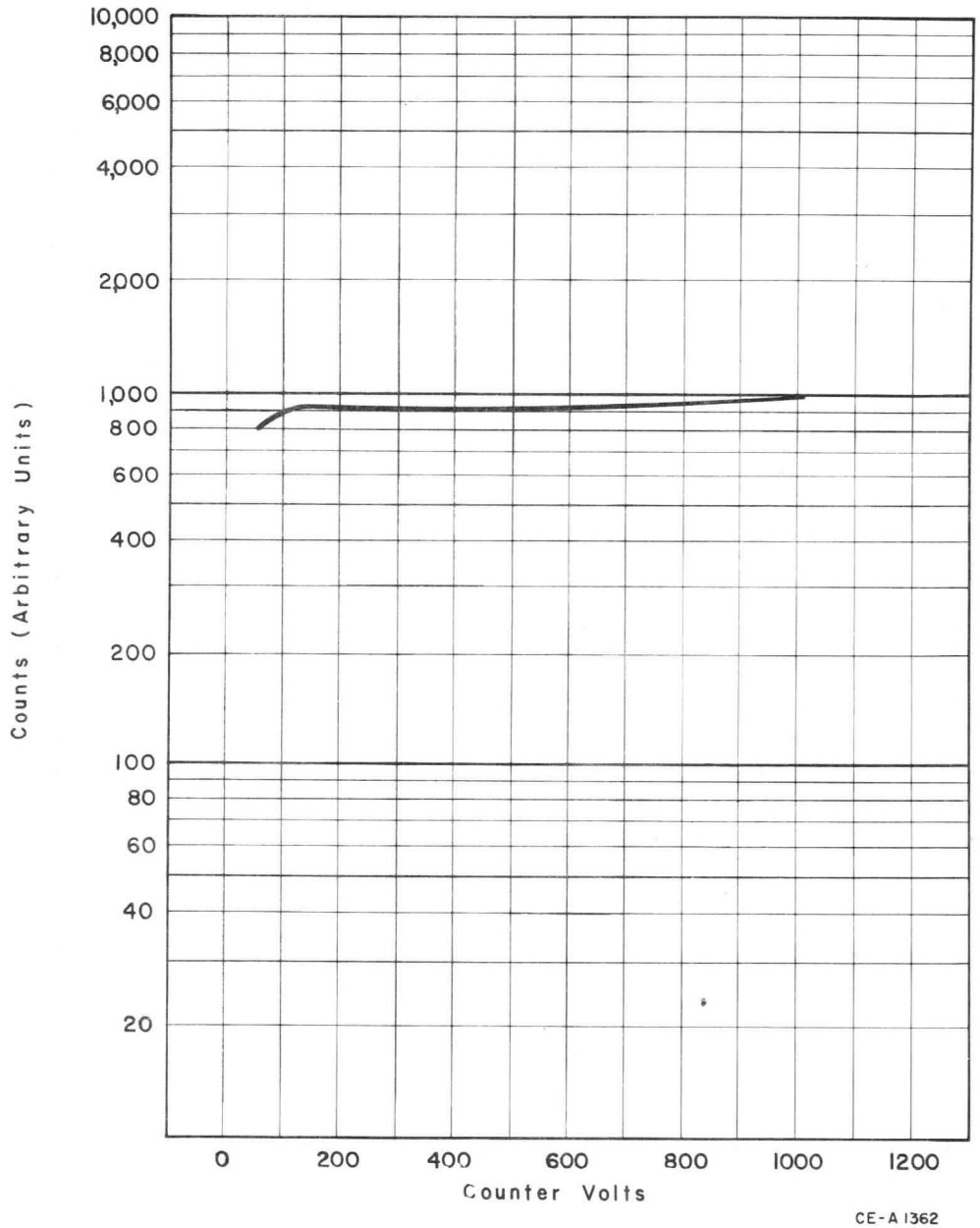

FIGURE 2

The information contained herein is supplied without assuming responsibility for infringement of patents or other rights of third parties which may result from its use. No license is granted by implication or otherwise under any patent or patent rights of Westinghouse Electric Corporation.

COMPENSATED IONIZATION CHAMBER TYPE 7741

The 7741 compensated ionization chamber is designed to detect thermal neutrons in the range from 2.5×10^2 to 2.5×10^{10} neutrons/cm²/second, in the presence of very high gamma radiation fields. The detector is of rugged construction, incorporating a design which allows operation at temperatures up to 300 °C.

The 7741 incorporates two outstanding design features. The first is the use of a "guard ring" type of construction to minimize reduction in signal currents due to leakage through the insulators. The second is the provision for continuously variable, electrical compensation. The neutron sensitivity of the chamber is approximately 4×10^{-14} amperes/neutron/cm²/second. Gamma sensitivity is approximately 3×10^{-11} amperes/R/hr when operated uncompensated, but it is reduced to approximately 3×10^{-13} amperes/R/hr in compensated operation, thus extending the operating range two decades.

The 7741 is constructed of high purity materials to reduce the effect of induced radioactivity. The case is 1100 aluminum; the electrodes of 3% aluminum, 97% magnesium alloy. Insulation is high purity alumina.

The 7741 is similar to the 6377 and 7353 in performance characteristics, differing primarily in outline dimensions and operating temperature.

MATERIALS:

Outer Case	1100 Aluminum
Electrodes	3% Al, 97% Mg Alloy
Insulation	Alumina
Neutron Sensitive Material:	
Content	Boron Enriched in B-10
Thickness	1 mg/cm²
Gas Filling	Nitrogen

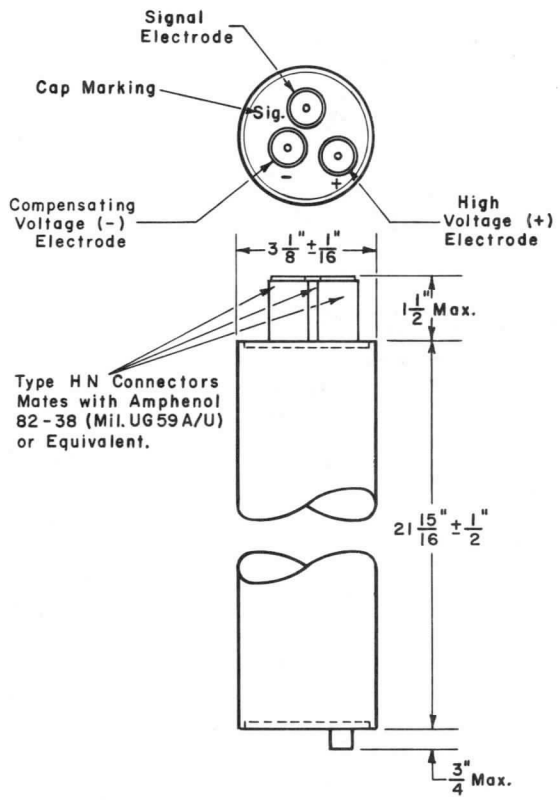

MECHANICAL:

Maximum Diameter	3-3/16	Inches
Maximum Overall Length	24	Inches
Approximate Sensitive Length	14	Inches
Net Weight	6-1/2	Pounds
Shipping Weight	20	Pounds

IMPEDANCE:

Resistance (300°C):		
Signal to Case (Minimum)	10^{12}	Ohms
H.V. to Case (Minimum)	10^{10}	Ohms
Compensating to Case (Minimum)	10^{10}	Ohms
Resistance (20°C):		
Signal to Case (Minimum)	10^{14}	Ohms
H.V. to Case (Minimum)	10^{12}	Ohms
Compensating to Case (Minimum)	10^{12}	Ohms
Capacitance: (Remaining Electrodes Tied to Case)		
Signal to Case (Approx.)	315	μμf
H.V. to Case (Approx.)	420	μμf
Compensating to Case (Approx.)	200	μμf

MAXIMUM RATINGS:

Voltage:		
H.V. to Case	1500	Vdc
L.V. to Case	500	Vdc
Signal to Case (for test)	500	Vdc
Temperature:		
Operating (Max.)	300	°C
External Pressure:		
(Dry and Non-corrosive atmosphere)	180	Pounds/In²
Thermal Neutron Flux	5×10^{11}	nv

TYPICAL OPERATION: (For Connection See Figure 1)

Operating Voltage	300 to 800	Vdc
Compensating Voltage (See Figure 2)	−10 to −80	Vdc
Thermal Neutron Flux Range	2.5×10^2 to 2.5×10^{10}	n/cm²/sec
Thermal Neutron Sensitivity	4×10^{-14}	Amperes/nv
Gamma Sensitivity Uncompensated	3×10^{-11}	Amperes/R/hr
Saturation Characteristics	See Figure 3	

TYPICAL CONNECTION DIAGRAM

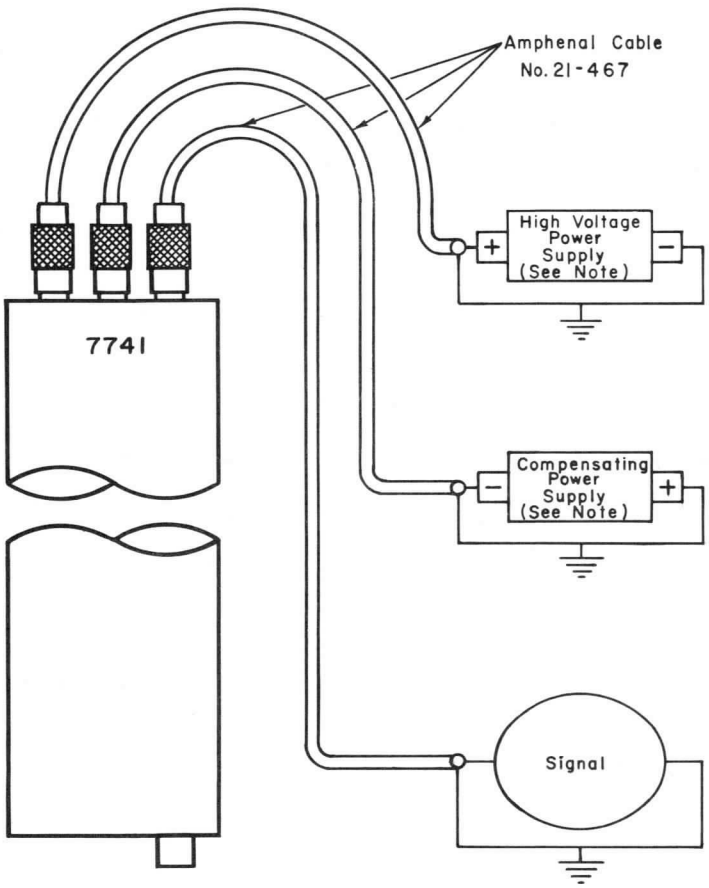

Note: Permissible power supply regulation and ripple will depend upon the particular application. See Section entitled "Ionization Chamber Operation."

CE-A1764

FIGURE 1

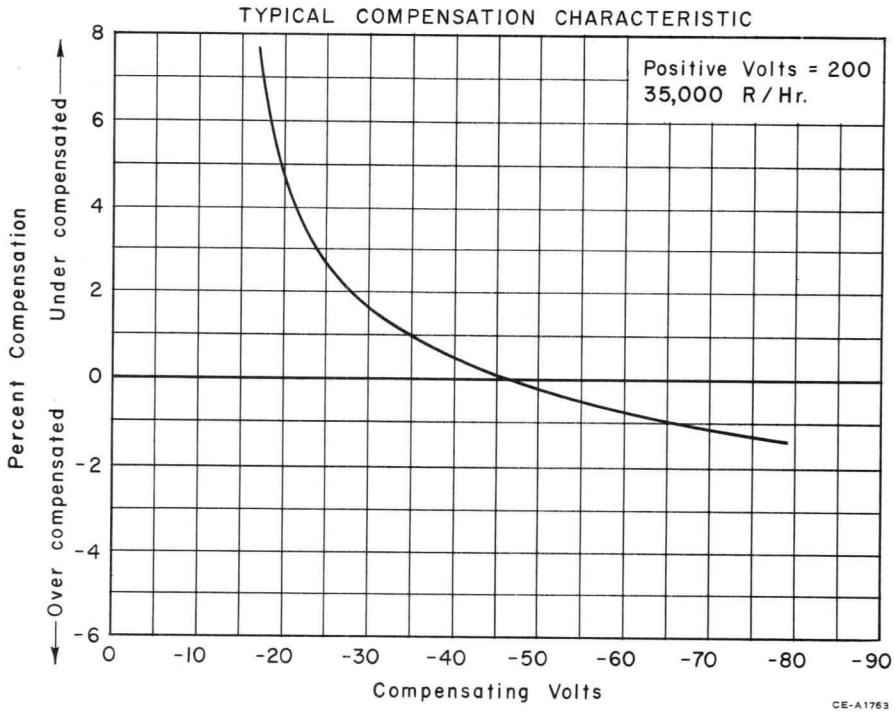
TYPICAL COMPENSATION CHARACTERISTIC
Positive Volts = 200
35,000 R/Hr.
Percent Compensation
Under compensated
Over compensated
8
6
4
2
0
-2
-4
-6
0
-10
-20
-30
-40
-50
-60
-70
-80
-90
Compensating Volts
CE-A1763

FIGURE 2

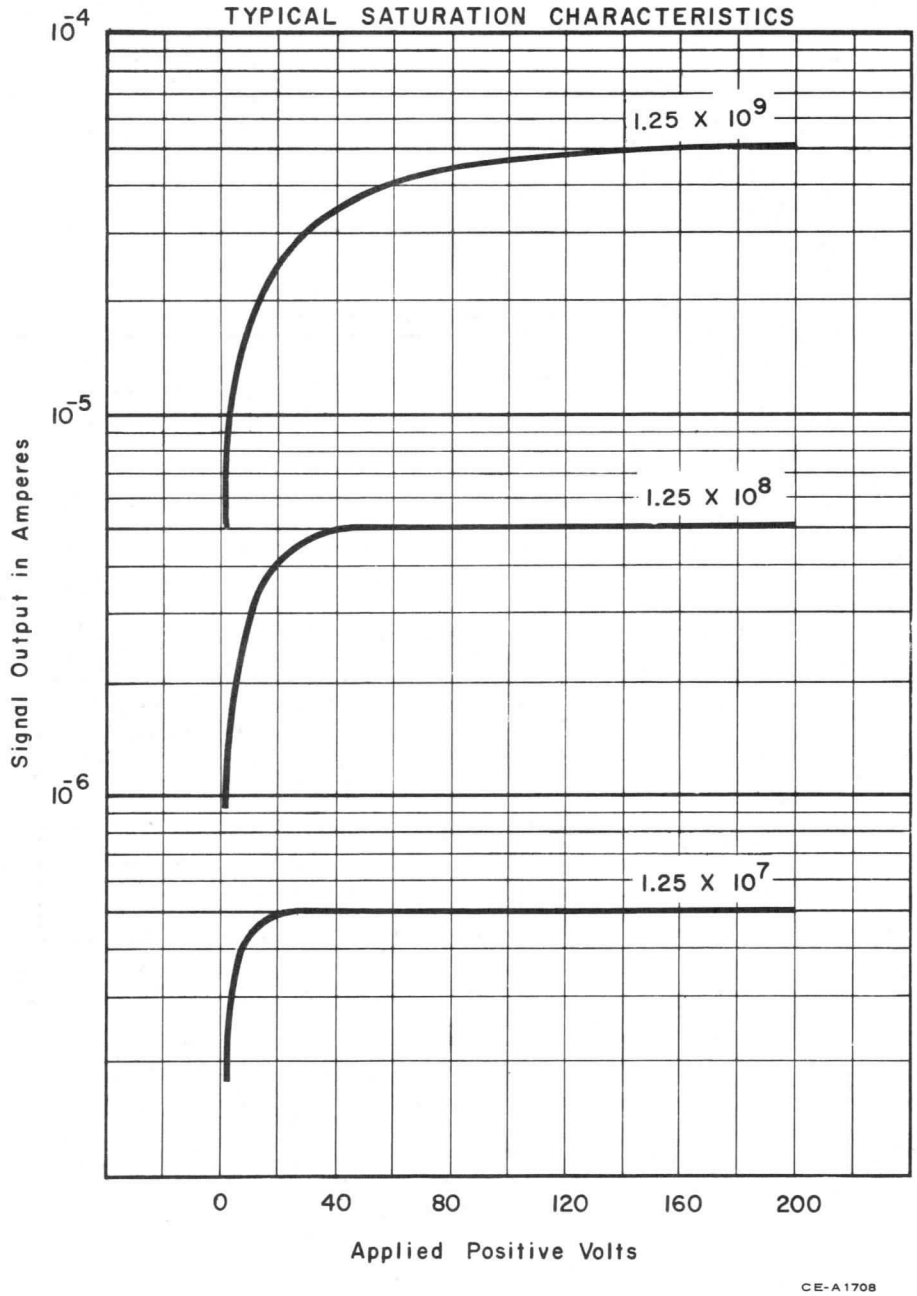

The information contained herein is supplied without assuming responsibility for infringement of patents or other rights of third parties which may result from its use. No license is granted by implication or otherwise under any patent or patent rights of Westinghouse Electric Corporation.

DUAL RANGE FISSION CHAMBER TYPE WL-8073

The WL-8073 provides the instrumentation designer with a device which permits operation as a counter for low flux levels and as an ionization chamber for high flux, power range monitoring. The range as a counter is about 1.4 to 1.4×10^5 neutrons/cm²/second; as a chamber, the range is approximately 5×10^5 to 1.4×10^{10} neutrons/cm²/second.

The WL-8073 is of aluminum construction with high purity alumina insulation. The use of alumina thoughout the detector permits operation to 300°F and yields a design of extremely rugged construction with high resistance to deterioration due to radiation damage. Operated as a fission counter producing large pulses above background electrical and ground noise, the thermal neutron sensitivity is approximately 0.7 counts/neutron/cm². Operation as an ionization chamber yields a thermal neutron sensitivity of approximately 1.4×10^{-13} ampere/neutron/cm²/second and a gamma sensitivity of approximately 4.2×10^{-11} amperes/R/hour.

MECHANICAL:

Maximum Diameter	2-1/16	Inches
Maximum Overall Length	11-11/16	Inches
Approximate Sensitive Length	6	Inches
Net Weight	1-3/4	Pounds
Shipping Weight	12	Pounds

MATERIALS:

Outer Case	Aluminum
Electrodes	Aluminum
Insulation	Alumina Ceramic
Neutron Sensitive Material:	
Content	U_3O_8 Enriched to more than 90% in U-235
Thickness	2 mg/cm²
Total Quantity	1.68 Grams
Gas Filling	Argon-Nitrogen Mixture
Gas Pressure	76 cm of Hg

IMPEDANCE:

Resistance (minimum)	10^9	Ohms
Capacitance	190	$\mu\mu$f

MAXIMUM RATINGS:

Voltage Between Electrodes	1000	Volts
Temperature	300	°F
External Pressure (Note 2)	180	Pounds/Inch²
Thermal Neutron Flux	3×10^{10}	nv

TYPICAL OPERATION AS A COUNTER: (Note 1)

Operating Voltage	300	Volts
Operating Voltage Plateau (See Figure 2)	200 to 800	Volts
Thermal Neutron Flux Range	1.4 to 1.4×10^5	nv
Sensitivity (Note 1)	0.7	CPS/nv
Output Pulse Characteristics:		
Amplitude (unloaded)	2×10^{-4}	Volts
Inherent Rise Time (average)	2×10^{-7}	Seconds

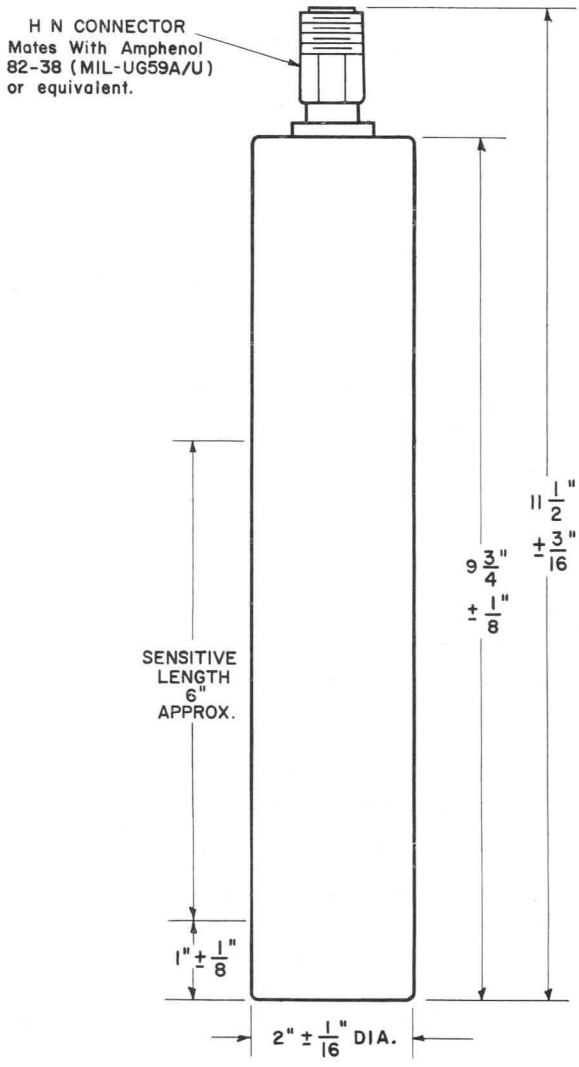

TYPICAL OPERATION AS A CHAMBER:

Operating Voltage (Note 3).	300 to 1000	Volts
Saturation Characteristics:	See Figure 3	
Thermal Neutron Flux Range (Note 4).	5×10^5 to 1.4×10^{10}	nv
Thermal Neutron Sensitivity	1.4×10^{-13}	Amperes/nv
Gamma Sensitivity	4.2×10^{-11}	Amperes/R/hour

NOTES

1. The sensitivity is 0.7 counts/neutron/cm^2 when the alpha background counting rate of the naturally radioactive uranium is adjusted to 5 counts/second. By varying the pulse height selector on the associated circuitry other sensitivities are available. See Figure 1 and the section entitled "Fission Counter Operation".
2. The pressurizing atmosphere must be dry and non-corrosive.
3. The minimum voltage required for saturation is dependent upon the incident neutron flux level. See Figure 3.
4. The lower limit of operating range is determined by an inherent alpha background current of approximately 1.6×10^{-8} amperes.

COUNTER SENSITIVITY AS FUNCTION OF PULSE HEIGHT SETTING

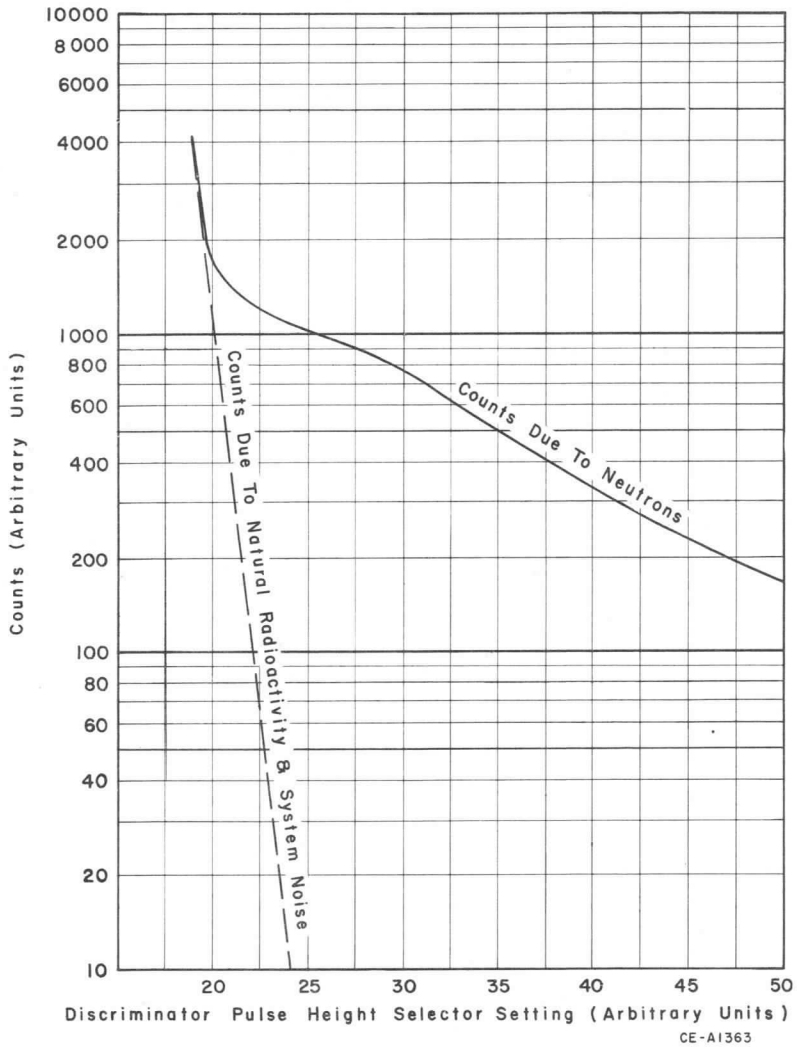

FIGURE 1

COUNTING RATE CHARACTERISTIC

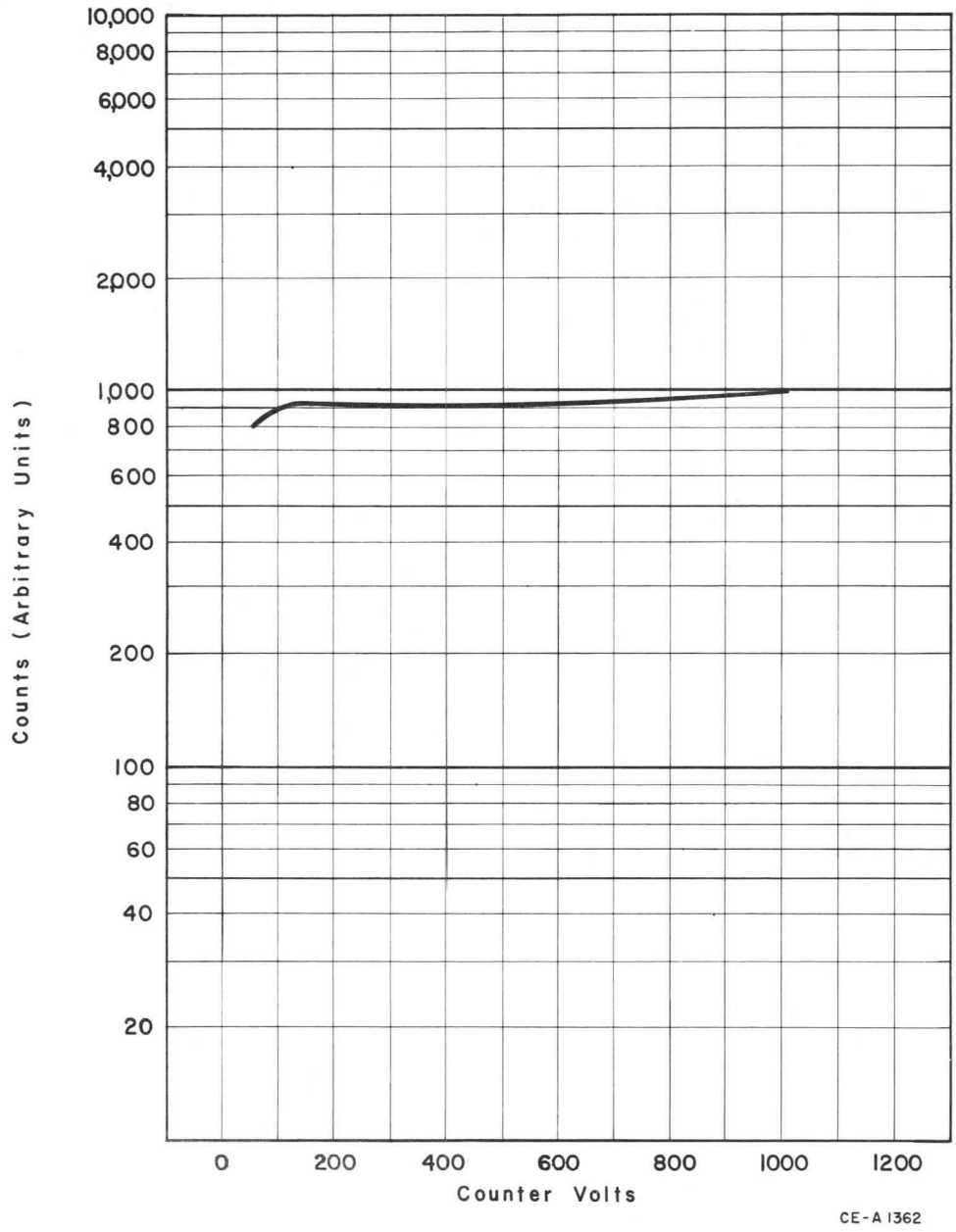

FIGURE 2

TYPICAL SATURATION CHARACTERISTICS
Ion Chamber Operation

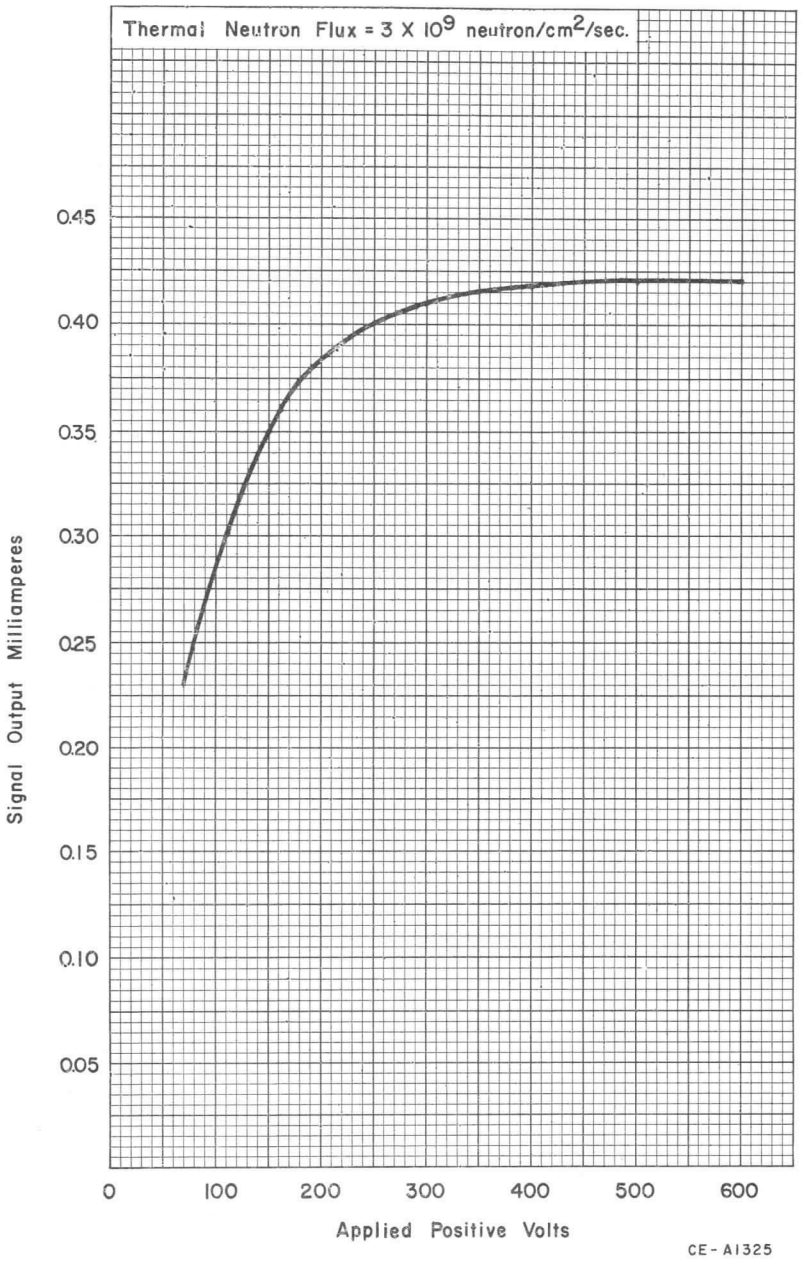

FIGURE 3

The information contained herein is supplied without assuming responsibility for infringement of patents or other rights of third parties which may result from its use. No license is granted by implication or otherwise under any patent or patent rights of Westinghouse Electric Corporation.

COMPENSATED IONIZATION CHAMBER TYPE 8074

The 8074 compensated ionization chamber is designed to detect thermal neutrons in the presence of high gamma radiation fields. Provision for electrical adjustment of compensation after installation makes it particularly useful for Intermediate and Power range operation in reactor facilities where high gamma gradients are encountered. The use of stabilized polystyrene and the rugged, guard-ring design assures noise-free operation and minimizes spurious signal currents due to electrical leakage.

The use of materials of low-activation cross section minimizes handling problems and shift of characteristics during exposure. Careful design of the sensitive volumes minimizes shift in compensation characteristics over a wide range of gamma does rates (See Figure 3).

The thermal neutron sensitivity of the 8074 is approximately 4×10^{-14} amperes/neutron/cm^2/second. The gamma sensitivity, when operated uncompensated, is approximately 3×10^{-11} amperes/R/hour. The combination of these parameters permits highly reliable operation from 2.5×10^{2} to 2.5×10^{10} neutrons/cm^2/second.

MECHANICAL		
Maximum Diameter	3-3/16	Inches
Maximum Overall Length	23-13/16	Inches
Approximate Sensitive Length	14	Inches
Net Weight	5-3/8	Pounds
Shipping Weight	19	Pounds
MATERIALS		
Outer Case	3% Al, 97% Mg Alloy	
Electrodes	3% Al, 97% Mg Alloy	
Insulation	Stabilized Polystyrene	
Neutron Sensitive Material:		
Content	Boron Enriched in B-10	
Thickness	1 mg/cm^2	
Gas Filling	Nitrogen	
IMPEDANCE		
Resistance: (Note 2)		
Signal Electrode to Case (minimum)	10^{13}	Ohms
H.V. Electrode to Case (minimum)	10^{12}	Ohms
Compensating Electrode to Case (minimum)	10^{12}	Ohms
Capacitance: (Note 1)		
Signal Electrode to Case (Approx.)	275	$\mu\mu$f
H.V. Electrode to Case (Approx.)	315	$\mu\mu$f
Compensating Electrode to Case (Approx.)	125	$\mu\mu$f
MAXIMUM RATINGS		
Voltage Between Electrodes (dc)	1500 max.	Volts
Temperature	175 max.	Degrees F
External Pressure (Note 3)	180 max.	Pounds/Inch^2
Thermal Neutron Flux	5×10^{11} max.	nv

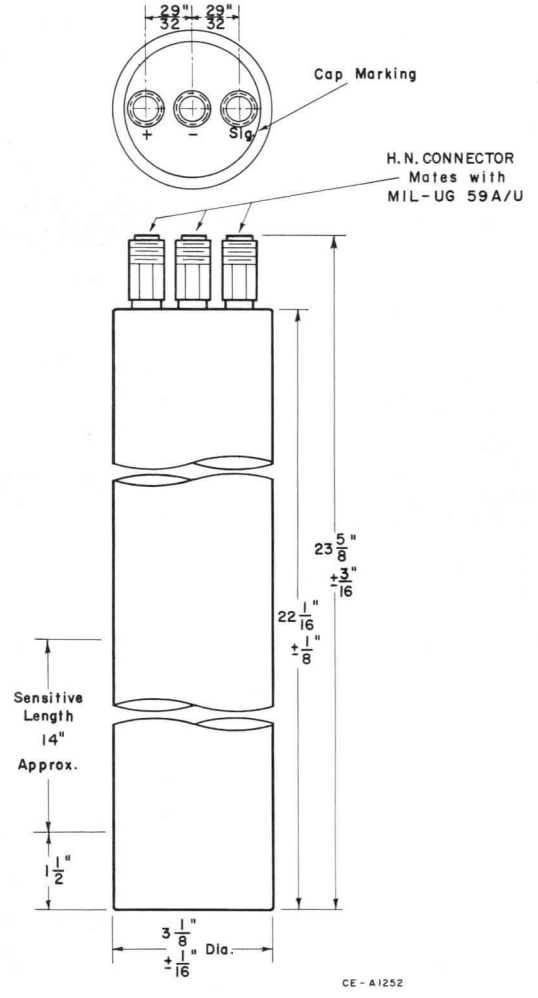

TYPICAL OPERATION

Typical Connection		See Figure 1
Operating Voltage	300 to 800	Volts
Compensating Voltage (See Figure 3)	−10 to −80	Volts
Saturation Characteristics		See Figure 2
Thermal Neutron Flux Range	2.5×10^{2} to 2.5×10^{10}	nv
Thermal Neutron Sensitivity	4×10^{-14}	Amperes/nv
Gamma Sensitivity:		
Total Compensation		zero
Uncompensated	3×10^{-11}	Amperes/R/hour

NOTES

1. Capacitance is measured between an electrode and case, with all other electrodes grounded.
2. The detector may not be immersed directly in water, and high humidity environments should be avoided as they will impair performance.
3. The pressurizing atmosphere must be dry and non-corrosive.

TYPICAL CONNECTION DIAGRAM

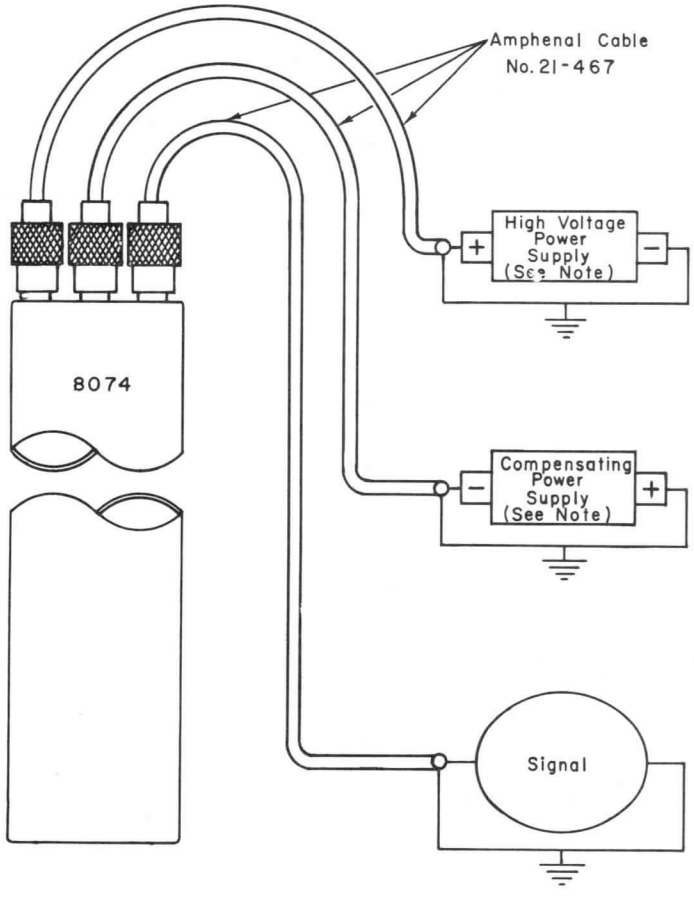

Note: Permissible power supply regulation and ripple will depend upon the particular application. See Section entitled "Ionization Chamber Operation."

CE-A1324 R1

FIGURE 1

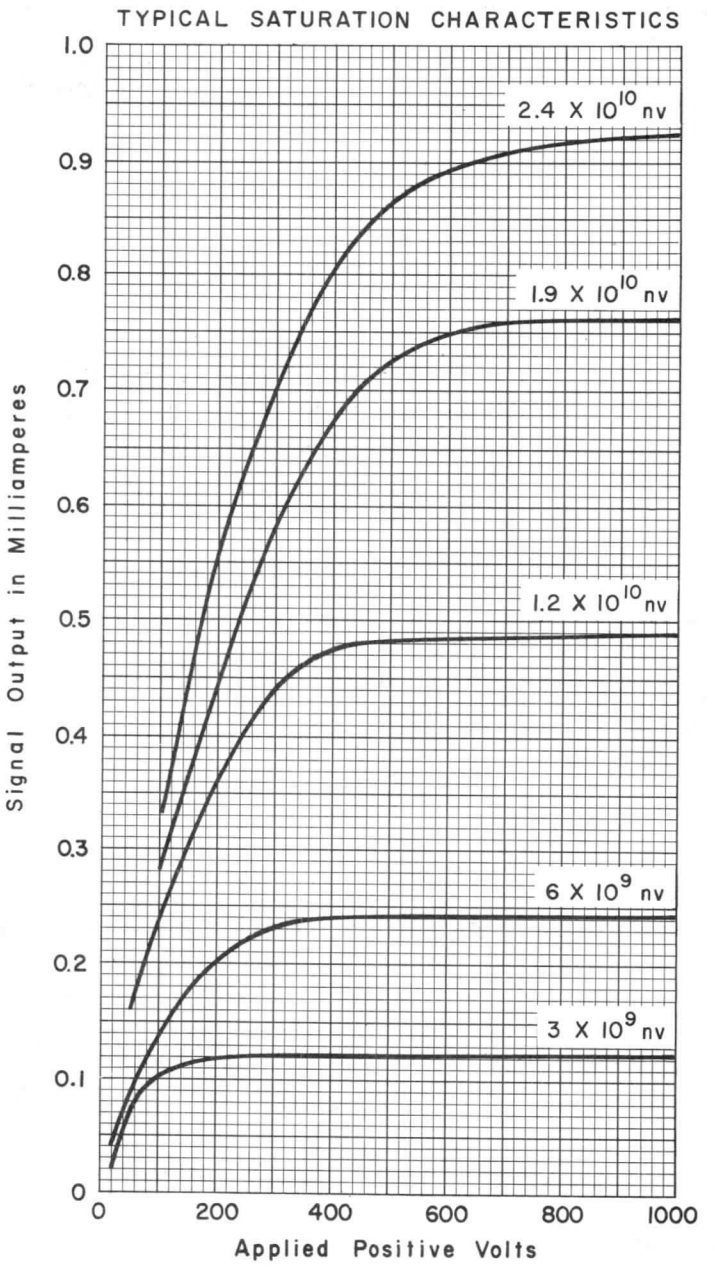
TYPICAL SATURATION CHARACTERISTICS
Signal Output in Milliamperes
1.0
0.9
0.8
0.7
0.6
0.5
0.4
0.3
0.2
0.1
0
2.4 X 10^10 nv
1.9 X 10^10 nv
1.2 X 10^10 nv
6 X 10^9 nv
3 X 10^9 nv
0
200
400
600
800
1000
Applied Positive Volts
CE-A1284 R2

FIGURE 2

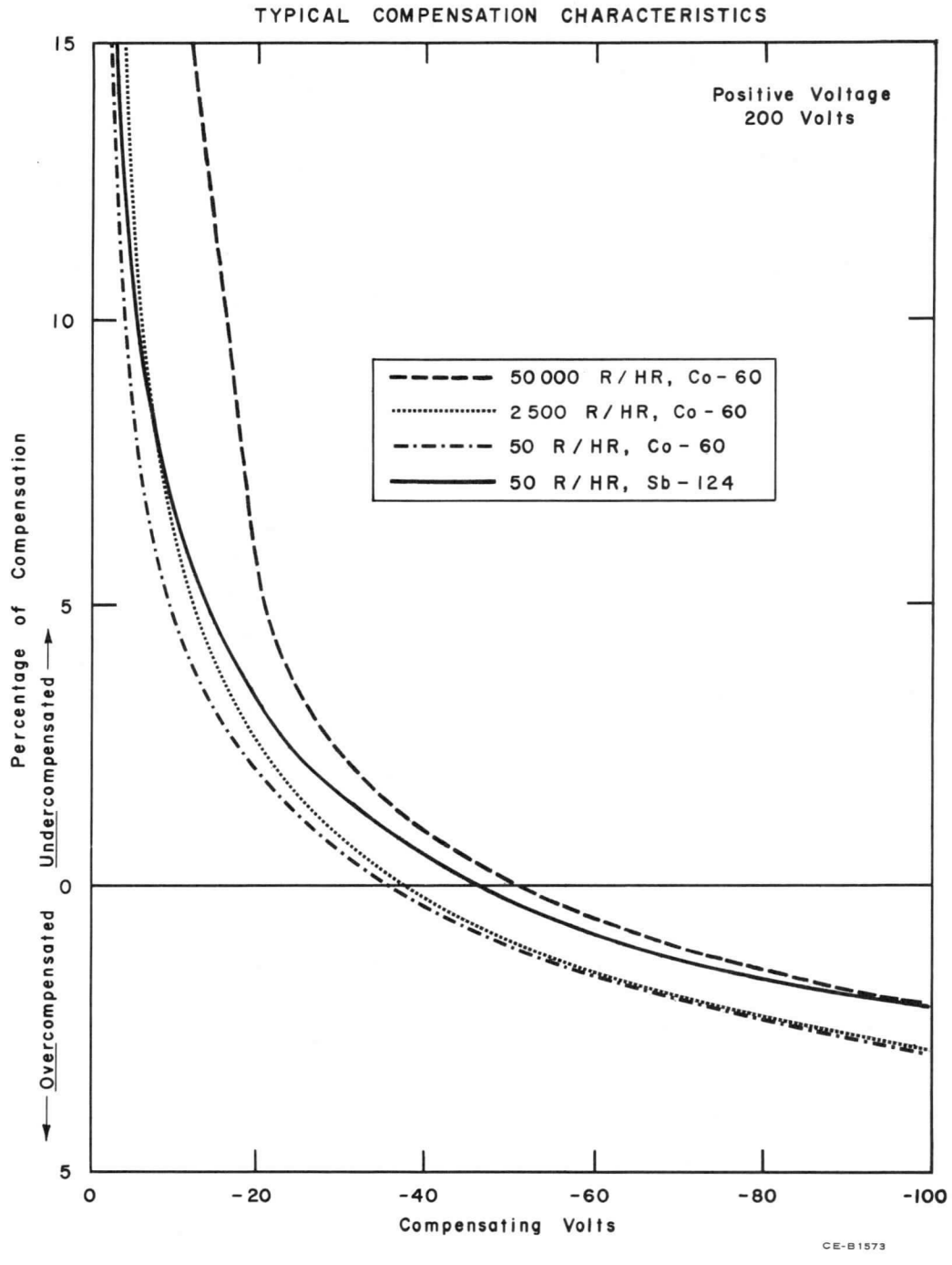

FIGURE 3

The information contained herein is supplied without assuming responsibility for infringement of patents or other rights of third parties which may result from its use. No license is granted by implication or otherwise under any patent or patent rights of Westinghouse Electric Corporation.

UNCOMPENSATED IONIZATION CHAMBER TYPE WL-8075

The WL-8075 is a guard-ring ionization chamber designed to detect thermal neutrons in the range from 2.5×10^3 to 2.5×10^{10} neutrons/cm²/second. The guard-ring construction combined with the use of high-purity alumina ceramics provides a design which minimizes leakage currents usually detrimental to low current operation. The detector is extremely rugged and the high alumina insulation used throughout permits operation to 300°F and minimized deterioration due to radiation damage.

The rugged construction makes the detector especially useful for Safety and Power range reactor instrumentation where mechanical shock and vibration present problems. The internal design provides a relatively high unperturbed thermal neutron sensitivity of about 4.4×10^{-14} amperes/neutron/cm²/second in a compact device. The gamma sensitivity is approximately 5×10^{-11} amperes/R/hour.

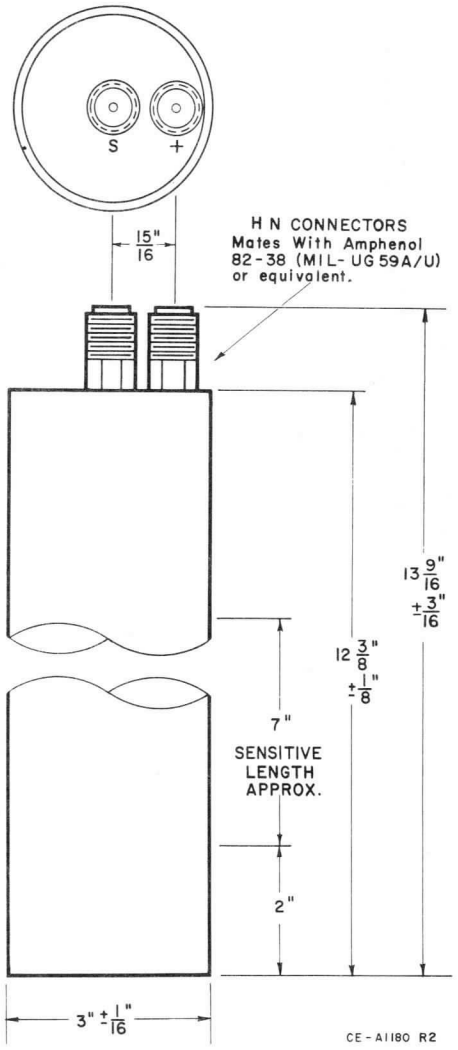

MECHANICAL

Maximum Diameter	3-1/16	Inches
Maximum Overall Length	13-3/4	Inches
Approximate Sensitive Length	7	Inches
Net Weight	2-1/2	Pounds
Shipping Weight	10	Pounds

MATERIALS

Outer Case	Aluminum
Electrodes	Aluminum
Insulation	Hi-Purity Alumina Ceramic
Neutron Sensitive Material	Boron Enriched to 96% in B-10
Gas Filling	Argon-Nitrogen Mixture

IMPEDANCE

Resistance:		
Signal Electrode to Case (minimum)	10^{11}	Ohms
H.V. Electrode to Case (minimum)	10^{11}	Ohms
Capacity:		
Signal Electrode to Case (Note 3)	250	pf
H.V. Electrode to Case (Note 4)	170	pf

MAXIMUM RATINGS

Voltage Between Electrodes	1500	Volts
Temperature	300	°F
External Pressure (Note 2)	180	Pounds/Inch²
Thermal Neutron Flux	10^{11}	nv

TYPICAL OPERATION

Operating Voltage (Note 1)	200 to 1000	Volts
Saturation Characteristics		Figure 2
Thermal Neutron Flux Range	2.5×10^3 to 2.5×10^{10}	nv
Thermal Neutron Sensitivity (Approx.)	4.4×10^{-14}	Amperes/nv
Gamma Sensitivity (Approx.)	5×10^{-11}	Amperes/R/hr

NOTES

1. The voltage necessary to produce saturation varies with the neutron flux level. Either polarity may be used. See Figure 2.
2. The pressurizing atmosphere must be dry and non-corrosive.
3. With H.V. electrode grounded to case.
4. With signal electrode grounded to case.

TYPICAL CONNECTION DIAGRAM

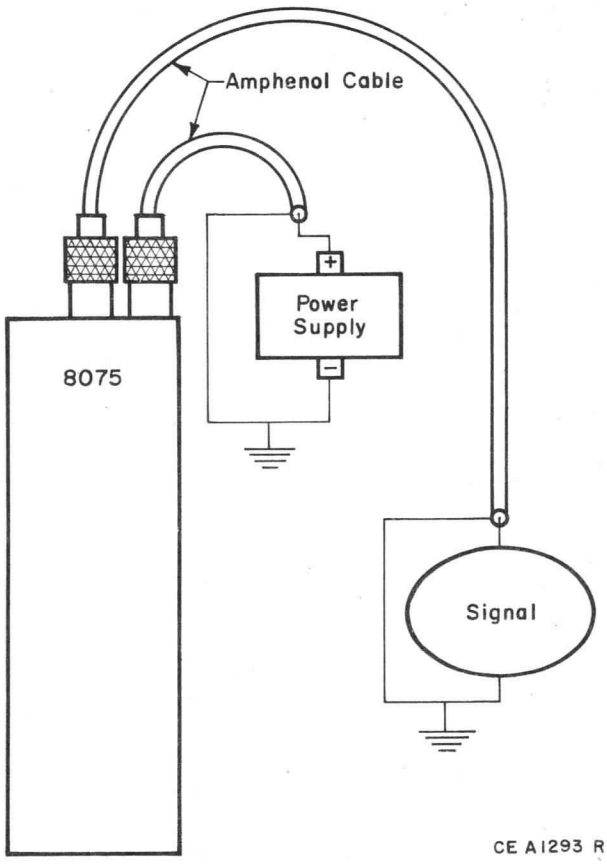

FIGURE 1

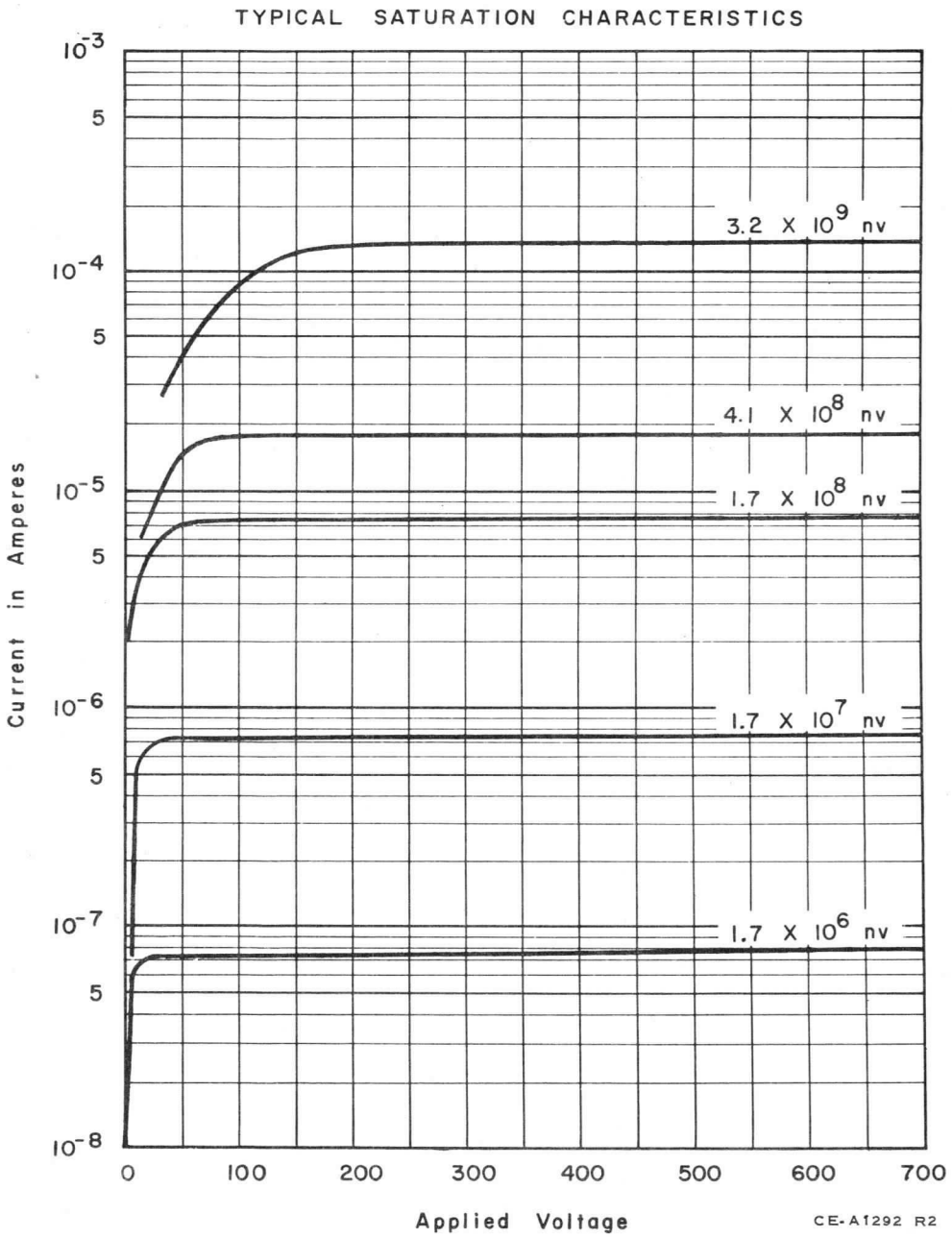
TYPICAL SATURATION CHARACTERISTICS
Current in Amperes
10^{-3}
5
10^{-4}
5
10^{-5}
5
10^{-6}
5
10^{-7}
5
10^{-8}
3.2 X 10^{9} nv
4.1 X 10^{8} nv
1.7 X 10^{8} nv
1.7 X 10^{7} nv
1.7 X 10^{6} nv
0
100
200
300
400
500
600
700
Applied Voltage
CE-A1292 R2

FIGURE 2

Westinghouse®

The information contained herein is supplied without assuming responsibility for infringement of patents or other rights of third parties which may result from its use. No license is granted by implication or otherwise under any patent or patent rights of Westinghouse Electric Corporation.

WESTINGHOUSE ELECTRIC CORPORATION, ELECTRONIC TUBE DIVISION, ELMIRA, NEW YORK

Westinghouse

WL-8075

February 1, 1962

UNCOMPENSATED IONIZATION CHAMBER TYPE WL-8075

The WL-8075 is a guard-ring ionization chamber designed to detect thermal neutrons in the range from 2.5×10^3 to 2.5×10^{10} neutrons/cm^2/second. The guard-ring construction combined with the use of high-purity alumina ceramics provides a design which minimizes leakage currents usually detrimental to low current operation. The detector is extremely rugged and the high alumina insulation used throughout permits operation to 300°F and minimized deterioration due to radiation damage.

The rugged construction makes the detector especially useful for Safety and Power range reactor instrumentation where mechanical shock and vibration present problems. The internal design provides a relatively high thermal neutron sensitivity of about 4.4×10^{-14} amperes/neutron/cm^2/second in a compact device. The gamma sensitivity is approximately 5×10^{-11} amperes/R/hour.

MECHANICAL		
Maximum Diameter	3-1/16	Inches
Maximum Overall Length	13-7/8	Inches
Approximate Sensitive Length	7	Inches
Net Weight	2-1/2	Pounds
Shipping Weight	10	Pounds
MATERIALS		
Outer Case	Aluminum	
Electrodes	Aluminum	
Insulation	Alumina Ceramic	
Neutron Sensitive Material	Boron Enriched to 96% in B-10	
Gas Filling	Argon-Nitrogen Mixture	
IMPEDANCE		
Resistance:		
Signal Electrode to Case (minimum)	10^{11}	Ohms
H.V. Electrode to Case (minimum)	10^{11}	Ohms
Capacity:		
Signal Electrode to Case (Note 3)	250	$\mu\mu$f
H.V. Electrode to Case (Note 4)	170	$\mu\mu$f
MAXIMUM RATINGS		
Voltage Between Electrodes	1500	Volts
Temperature	300	°F
External Pressure (Note 2)	180	Pounds/Inch^2
Thermal Neutron Flux	10^{11}	nv
TYPICAL OPERATION		
Operating Voltage (Note 1)	200 to 1000	Volts
Saturation Characteristics	Figure 2	
Thermal Neutron Flux Range	2.5×10^3 to 2.5×10^{10}	nv
Thermal Neutron Sensitivity (Approx.)	4.4×10^{-14}	Amperes/nv
Gamma Sensitivity (Approx.)	5×10^{-11}	Amperes/R/hr

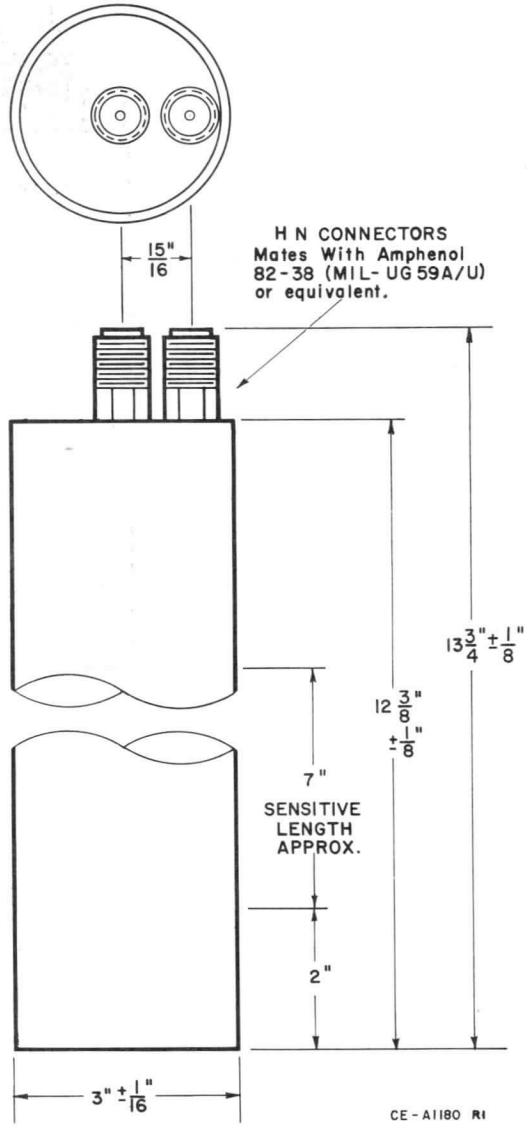

NOTES

1. The voltage necessary to produce saturation varies with the neutron flux level. Either polarity may be used. See Figure 2.
2. The pressurizing atmosphere must be dry and non-corrosive.
3. With H.V. electrode grounded to case.
4. With signal electrode grounded to case.

TYPICAL CONNECTION DIAGRAM

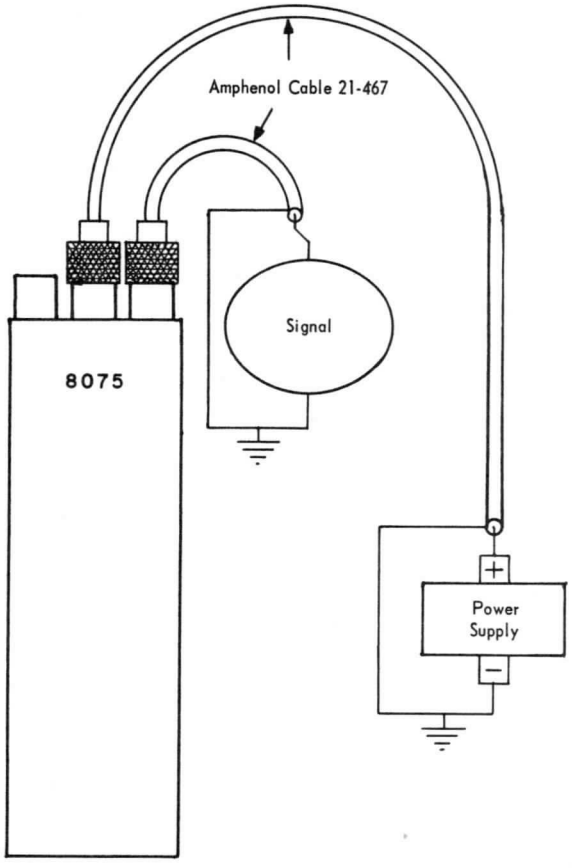

FIGURE 1

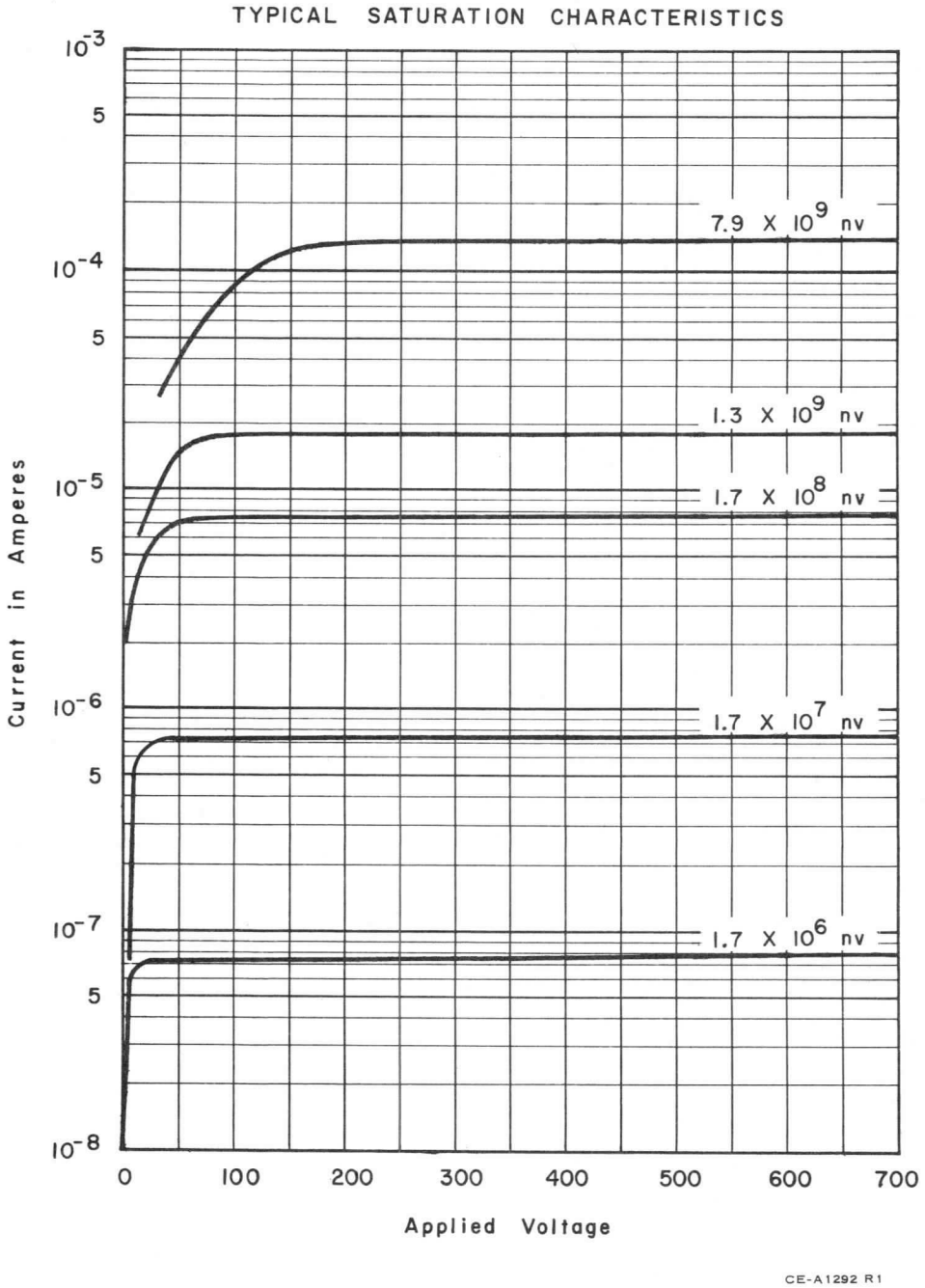
TYPICAL SATURATION CHARACTERISTICS
Current in Amperes
10^{-3}
5
10^{-4}
5
10^{-5}
5
10^{-6}
5
10^{-7}
5
10^{-8}
7.9 X 10^{9} nv
1.3 X 10^{9} nv
1.7 X 10^{8} nv
1.7 X 10^{7} nv
1.7 X 10^{6} nv
0
100
200
300
400
500
600
700
Applied Voltage
CE-A1292 R1

FIGURE 2

Westinghouse®

The information contained herein is supplied without assuming responsibility for infringement of patents or other rights of third parties which may result from its use. No license is granted by implication or otherwise under any patent or patent rights of Westinghouse Electric Corporation.

June 15, 1965

COMPENSATED IONIZATION CHAMBER TYPE WL-8105

The WL-8105 is a compensated ionization chamber designed to detect thermal neutrons in the presence of relatively high gamma radiation fields. The chamber is a fixed, electrically compensated type and it should find wide application in critical core research and low and high power reactor facilities. The use of stabilized polystyrene and the rugged, guard-ring design minimizes signals due to electrical leakage.

The chamber is constructed of high purity aluminum in the electrodes, case, and major support structures to minimize handling problems and shift in compensation due to activation. The chamber is hydrogen filled to reduce the saturation voltage requirements at high flux levels.

The thermal neutron sensitivity of the WL-8105 is approximately 1.5×10^{-14} amperes/neutron/cm^2/second. The gamma sensitivity, when operated uncompensated, is approximately 3.5×10^{-12} amperes/R/hr.

MECHANICAL:

Maximum Diameter	3-1/2	Inches
Maximum Over-all Length	10-3/4	Inches
Approximate Sensitive Length	5-1/2	Inches
Net Weight	3-3/4	Pounds
Shipping Weight	12	Pounds

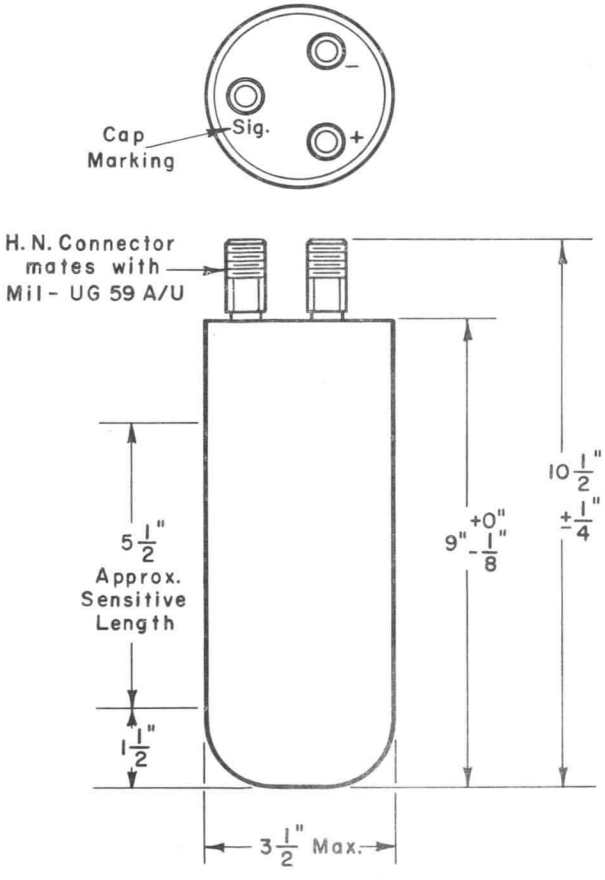

MATERIALS:

Outer Case	Aluminum
Electrodes	Aluminum
Insulation	Stabilized Polystyrene
Neutron Sensitive Material:	
Content	Boron Enriched in B-10
Thickness	1 mg/cm^2
Gas Filling	Hydrogen

IMPEDANCE:

Resistance: (Note 1)		
Signal-to-case, Minimum	10^{13}	Ohms
H.V.-to-case, Minimum	10^{12}	Ohms
Compensating-to-case, Minimum	10^{12}	Ohms
Capacitance: (Note 2)		
Signal-to-case, Approx.	130	$\mu\mu$f
H.V.-to-case, Approx.	140	$\mu\mu$f
Compensating-to-case, Approx.	75	$\mu\mu$f

MAXIMUM RATINGS:

Voltage Between Electrodes (dc)	1000	Volts
Temperature	175	°F
External Pressure (Note 3)	180	PSI
Thermal Neutron Flux	5×10^{11}	nv

TYPICAL OPERATION:

Typical Connections	See Figure 1	
Operating Voltage	300 to 800	Volts
Saturation Characteristics	See Figure 2	
Compensating Voltage	See Figure 3	
Thermal Neutron Flux Range	2.5×10^2 to 2.5×10^{10}	
Thermal Neutron Sensitivity	1.5×10^{-14}	Amperes/nv
Gamma Sensitivity:		
Compensated	2.5×10^{-13}	Amperes/R/hr
Uncompensated	3.5×10^{-12}	Amperes/R/hr

NOTES

1. The detector may not be immersed directly in water, and high humidity environments should be avoided as they will impair performance.
2. Capacitance is measured between an electrode and the case, with all other electrodes grounded to the case.
3. The pressurizing atmosphere must be dry and non-corrosive.

TYPICAL CONNECTION DIAGRAM

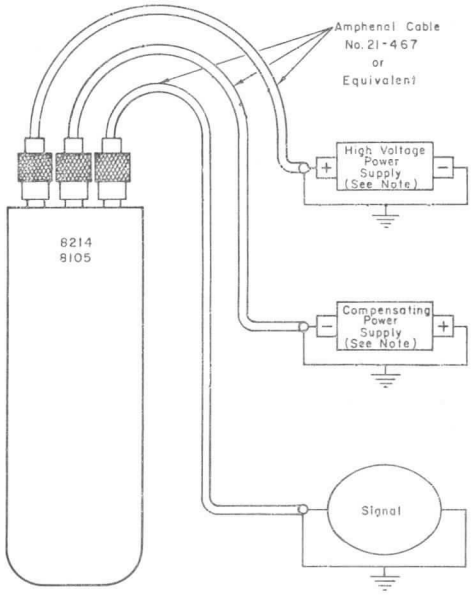

Note: Permissible power supply regulation and ripple will depend upon the particular application. See Section entitled "Ionization Chamber Operation."

CE-A1762

FIGURE 1

TYPICAL SATURATION CHARACTERISTICS

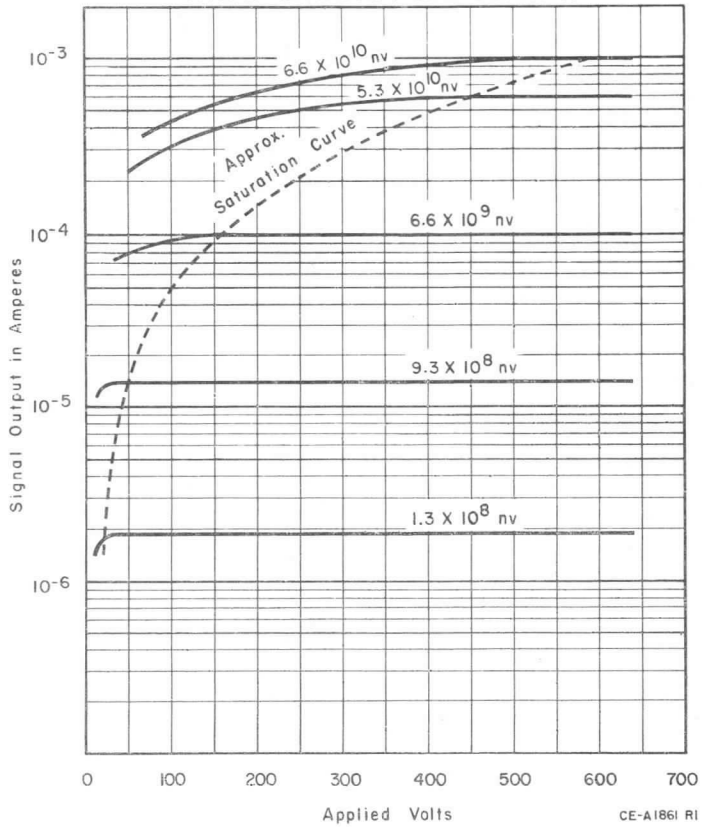

CE-A1861 RI

FIGURE 2

TYPICAL COMPENSATION CHARACTERISTICS

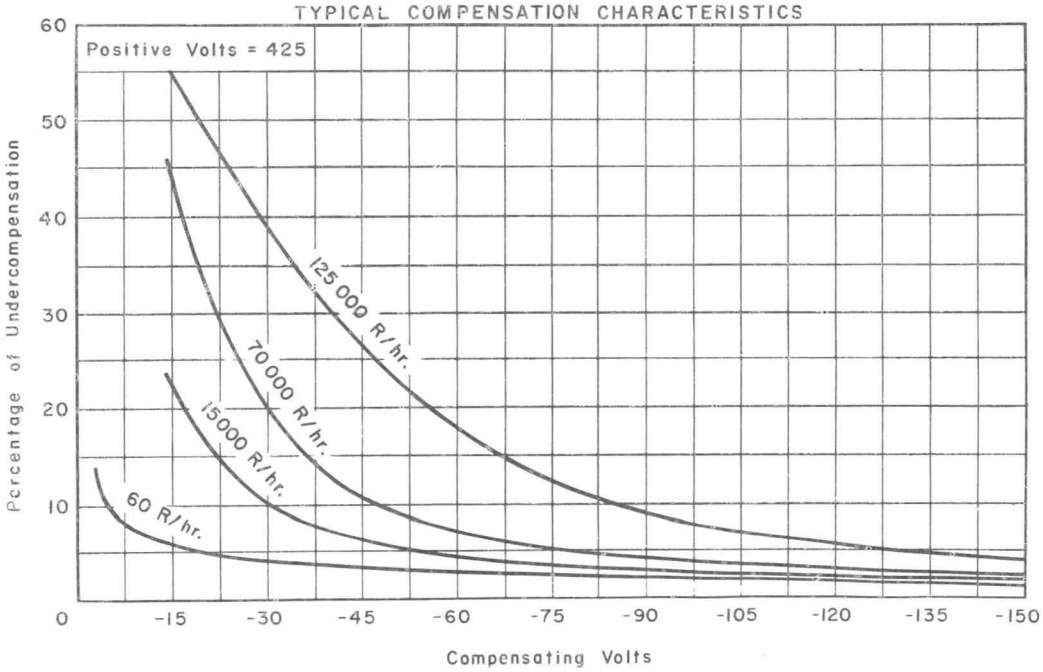

FIGURE 3

The information contained herein is supplied without assuming responsibility for infringement of patents or other rights of third parties which may result from its use. No license is granted by implication or otherwise under any patent or patent rights of Westinghouse Electric Corporation.

June 15, 1965

UNCOMPENSATED IONIZATION CHAMBER TYPE WL-8137

The WL-8137 uncompensated ionization chamber is designed to detect thermal neutrons for the control of reactors in the power range and to feed safety channel instrumentation. Rugged construction and guard-ring design reduce spurious signals due to mechanical vibration and electrical leakage. The chamber is hydrogen filled to reduce the saturation voltage requirements at high flux levels.

The chamber electrodes, case, and major support members are constructed of high purity aluminum to minimize handling problems due to activation. The insulation is high stability, cross-linked polystyrene.

The thermal neutron sensitivity is approximately 1.5×10^{-14} amperes/cm^2/second. The gamma sensitivity is approximately 3.5×10^{-12} amperes/R/hr. These values allow operation in thermal neutron fluxes from 5×10^3 to 5×10^{10} neutrons/cm^2/second.

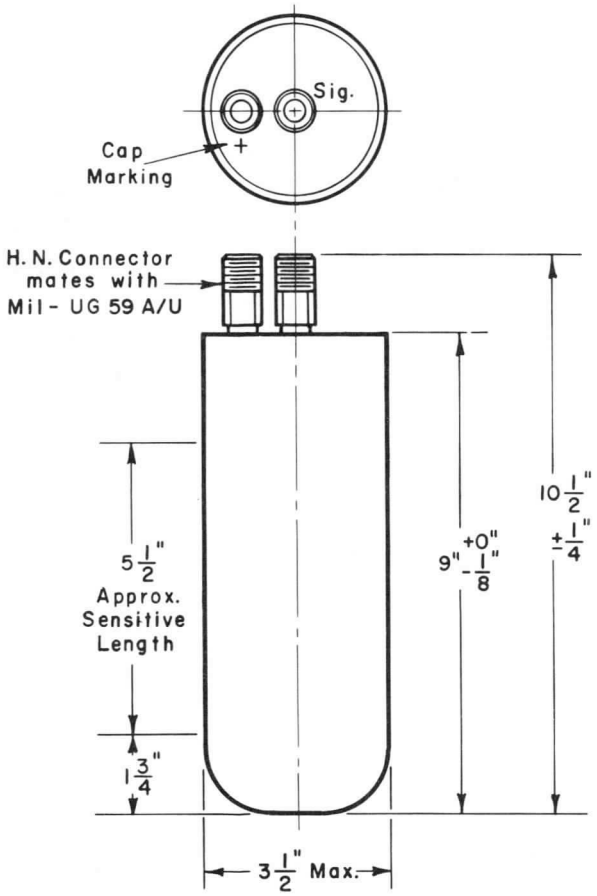

MECHANICAL:

Maximum Diameter	3-1/2	Inches
Maximum Overall Length	10-3/4	Inches
Approximate Sensitive Length	5-1/2	Inches
Net Weight	3-1/2	Pounds
Shipping Weight	12	Pounds

MATERIALS:

Outer Case	Aluminum
Electrodes	Aluminum
Insulation	Stabilized Polystyrene
Neutron Sensitive Material:	
Content	Boron Enriched in B-10
Thickness	1 mg/cm^2
Gas Filling	Hydrogen

IMPEDANCE:

Resistance:		
Signal-to-Case, Minimum	10^{13}	Ohms
H.V.-to-Case, Minimum	10^{12}	Ohms
Capacitance: (Note 1)		
Signal-to-Case, Approx.	110	$\mu\mu$f
H.V.-to-Case, Approx.	150	$\mu\mu$f

MAXIMUM RATINGS:

Voltage Between Electrodes (dc)	1000	Volts
Temperature	175	°F
External Pressure (Note 2)	180	PSI
Thermal Neutron Flux	5×10^{11}	nv

TYPICAL OPERATION:

Operating Voltage	300 to 800	Volts
Thermal Neutron Flux Range	5×10^3 to 5×10^{10}	nv
Thermal Neutron Sensitivity	1.5×10^{-14}	Amperes/nv
Gamma Sensitivity	3.5×10^{-12}	Amperes/R/hr

1. Capacitance is measured between an electrode and the case, with all other electrodes grounded to the case.
2. The pressurizing atmosphere must be dry and non-corrosive.

TYPICAL CONNECTION DIAGRAM

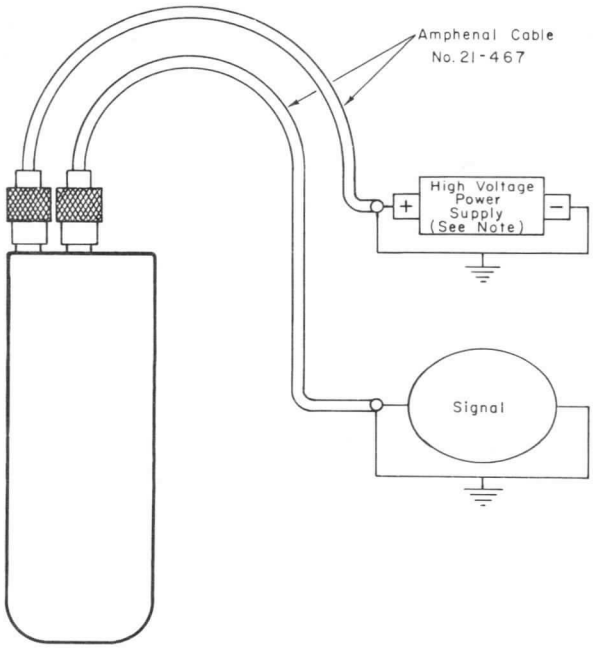

Note: Permissible power supply regulation and ripple will depend upon the particular application. See section entitled "Ionization Chamber Operation."

CE-A1929

FIGURE 1

TYPICAL SATURATION CHARACTERISTICS

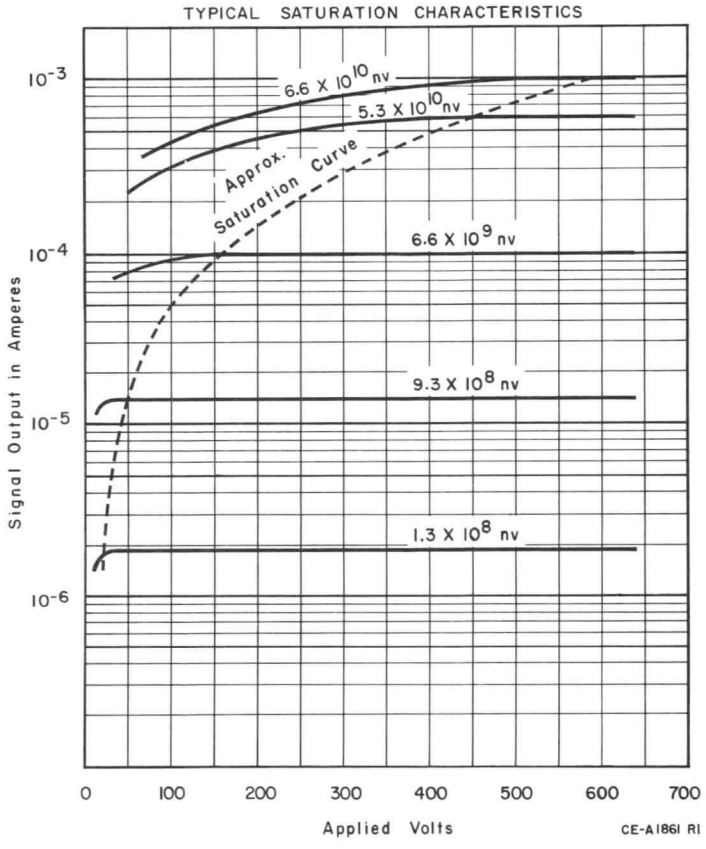

CE-A1861 RI

FIGURE 2

The information contained herein is supplied without assuming responsibility for infringement of patents or other rights of third parties which may result from its use. No license is granted by implication or otherwise under any patent or patent rights of Westinghouse Electric Corporation.

June 15, 1965

COMPENSATED IONIZATION CHAMBER TYPE WL-8214

The WL-8214 ionization chamber is designed to detect thermal neutrons in the presence of relatively high gamma radiation fields when varying strength or a high gradient of the field is encountered. The chamber is a variable, electrically compensated type and should find wide application in high power facilities and in research institutions. The guard-ring design employs stabilized polystyrene to reduce electrical leakage and minimize spurious signals. The chamber is constructed of high purity aluminum in the electrodes, case, and major support structures to minimize handling problems and shift in compensation due to activation. The chamber is hydrogen filled to reduce the saturation voltage requirements at high flux levels.

The thermal neutron sensitivity of the WL-8214 is approximately 1.5×10^{-14} amperes/neutron/cm^2/second. The gamma sensitivity is approximately 3.5×10^{-12} amperes/R/hr (uncompensated), and a reduction of this sensitivity by a factor of 100 may easily be achieved.

MECHANICAL

Maximum Diameter	3-1/2	Inches
Maximum Over-all Length	10-3/4	Inches
Approximate Sensitive Length	5-1/2	Inches
Net Weight	4	Pounds
Shipping Weight	12	Pounds

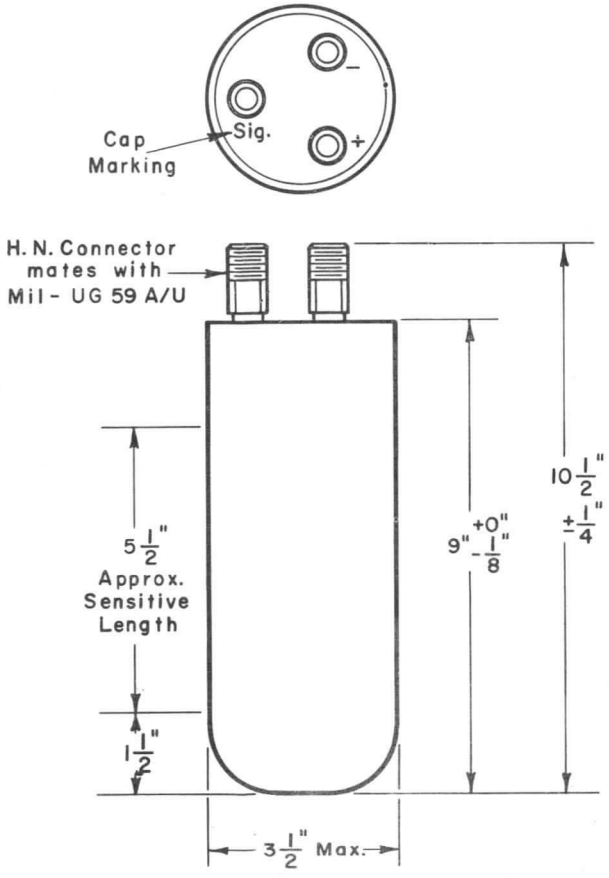

MATERIALS

Outer Case	Aluminum
Electrodes	Aluminum
Insulation	Stabilized Polystyrene
Neutron-Sensitive Material:	
Content	Boron Enriched in B-10
Thickness	1 mg/cm^2
Gas Filling	Hydrogen

IMPEDANCE

Resistance: (Note 1)		
Signal-to-case, minimum	10^{13}	Ohms
H.V.-to-case, minimum	10^{12}	Ohms
Compensating-to-case, minimum	10^{12}	Ohms
Capacitance: (Note 2)		
Signal-to-case, Approx.	135	$\mu\mu$f
H.V.-to-case, Approx.	140	$\mu\mu$f
Compensating-to-case, Approx.	80	$\mu\mu$f

MAXIMUM RATINGS

Voltage Between Electrodes, (d-c)	1000	Volts
Temperature	175	°F
External Pressure (Note 3)	180	PSI
Thermal Neutron Flux	5×10^{11}	nv

TYPICAL OPERATION

Typical Connections	See Figure 1	
Operating Voltage	300 to 800	Volts
Saturation characteristics	See Figure 2	
Compensating Voltage	See Figure 3	
Thermal Neutron Flux Range	2.5×10^2 to 2.5×10^{10}	nv
Thermal Neutron Sensitivity	1.5×10^{-14}	Amperes/nv
Gamma Sensitivity:		
Uncompensated	3.5×10^{-12}	Amperes/R/hr
Total Compensation	Zero	

NOTES

1. The detector may not be immersed directly in water and high humidity environments should be avoided.
2. Capacitance is measured between an electrode and the case, with all other electrodes grounded to the case.
3. The pressurizing atmosphere must be dry and non-corrosive.

TYPICAL CONNECTION DIAGRAM

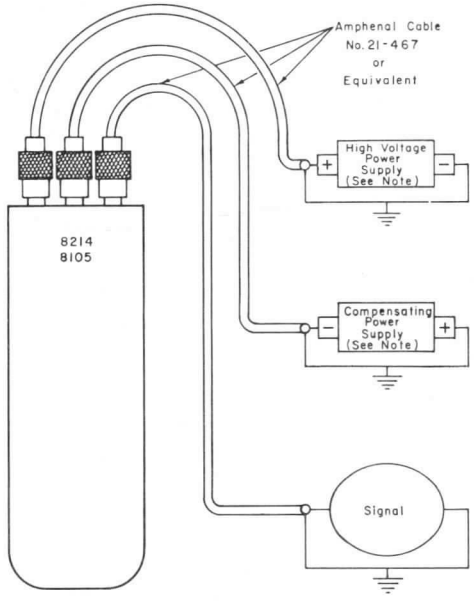

Note: Permissible power supply regulation and ripple will depend upon the particular application. See Section entitled "Ionization Chamber Operation."

CE-A1762

FIGURE 1

TYPICAL SATURATION CHARACTERISTICS

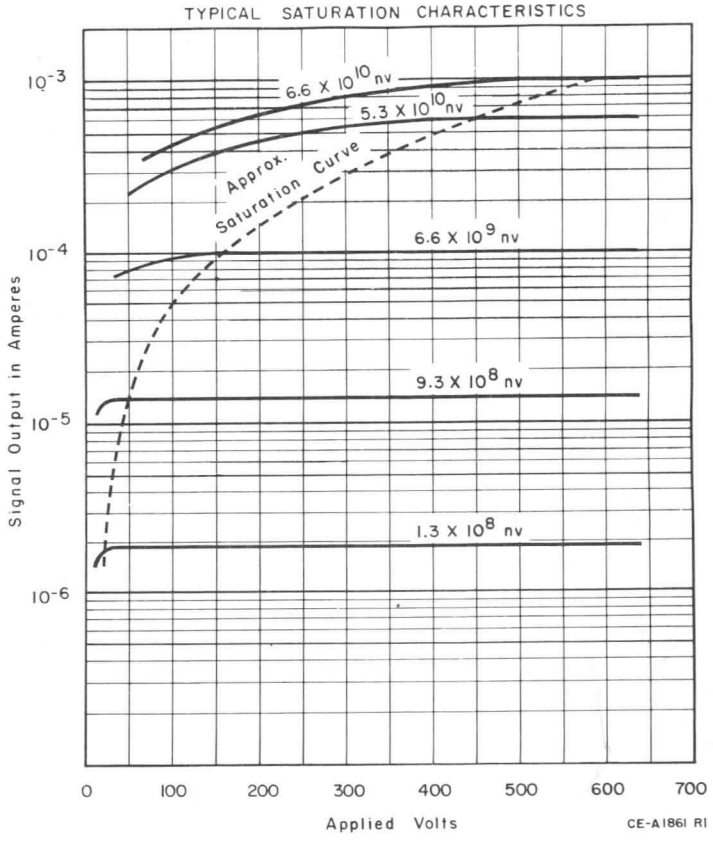

CE-A1861 RI

FIGURE 2

TYPICAL COMPENSATION CHARACTERISTIC
AT
LOW GAMMA LEVELS

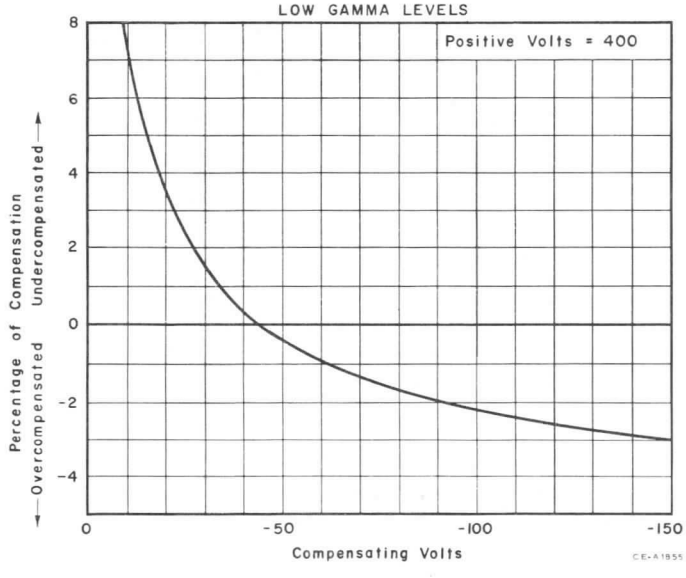

CE-A1955

FIGURE 3

The information contained herein is supplied without assuming responsibility for infringement of patents or other rights of third parties which may result from its use. No license is granted by implication or otherwise under any patent or patent rights of Westinghouse Electric Corporation.

Westinghouse

WL-22716
WL-22716A

February 1, 1963

HERMETICALLY SEALED DETECTOR THIMBLE TYPES WL-22716 AND WL-22716A FOR USE WITH TYPE WL-6377 AND WL-8074

The WL-22716 and WL-22716A are designed for use with the WL-6377 compensated ionization chamber, primarily in high humidity and swimming-pool reactor applications. The housing serves both as a watertight container and an electrical insulation between the detector and ground. This latter feature minimizes ground loop pickup problems.

The WL-22716 and WL-22716A are constructed of aluminum outer case, end caps and fittings. All exterior metal surfaces are alodited to extend the useful life while submerged in water or water vapor. The housing is supplied with three 80 foot lengths of Amphenol 21-541 low-noise coaxial cable, each with a connector to mate to the detector inside and an integral dual-seal collar for watertight entry of the cables to the detector tube. The entire assembly is demountable, by the user, to permit servicing of the detector or cables.

The WL-22716 and WL-22716A have a top cap with 2 eye-bolts for attachment of lifting cables. The WL-22716 has a bottom cap with tapped holes to facilitate adding ballast for submersion. The WL-22716A features a ballast, sufficient for submersion, installed on the bottom cap of the tube. This ballast may be removed by the customer.

MECHANICAL

Diameter	4 Inches
Overall Length (Less Cable & Eye-bolts)	
WL-22716	35-1/2 Inches
WL-22716A	37-1/4 Inches
Net Weight (Less Cable)	
WL-22716	7 Pounds
WL-22716A	17 Pounds
Shipping Weight (Complete)	
WL-22716	20 Pounds
WL-22716A	30 Pounds

MATERIALS

Outer Case & Fittings	Aluminum
Cables	Amphenol 21-541

MAXIMUM RATINGS

Submersion Depth	30 Feet of Water
Temperature	175° F

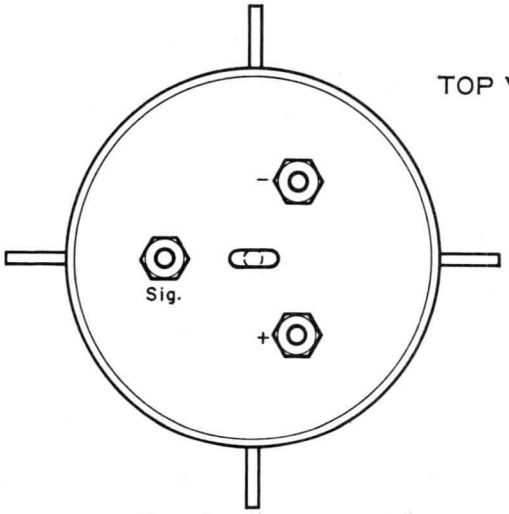

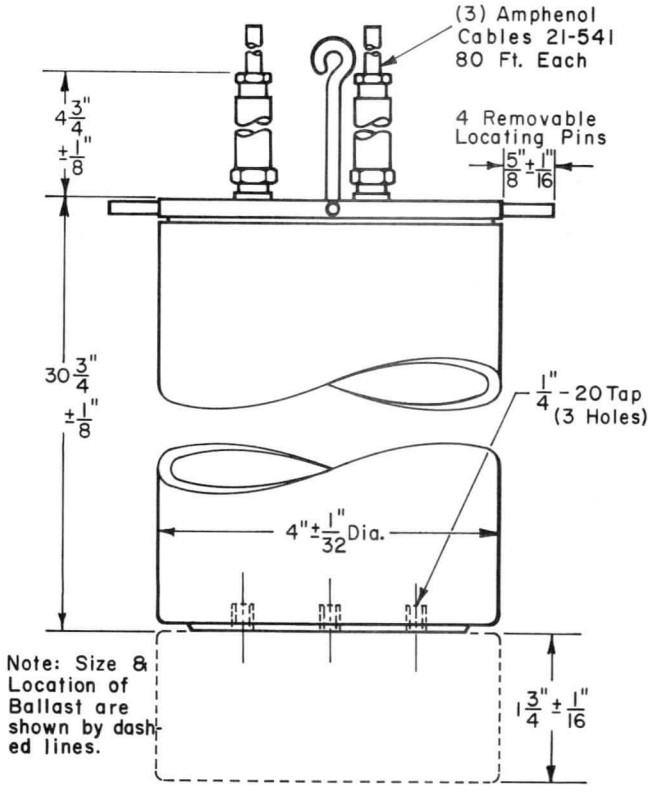

The information contained herein is supplied without assuming responsibility for infringement of patents or other rights of third parties which may result from its use. No license is granted by implication or otherwise under any patent or patent rights of Westinghouse Electric Corporation.

PRINTED IN U.S.A.

Neutron & Radiation Detector Section
WESTINGHOUSE ELECTRIC CORPORATION, ELECTRONIC TUBE DIVISION, ELMIRA, NEW YORK

Westinghouse

WL-22717
WL-22717A

February 1, 1963

HERMETICALLY SEALED DETECTOR THIMBLE TYPES WL-22717 AND WL-22717A FOR USE WITH TYPE WL-6307

The WL-22717 and WL-22717A are designed for use with the WL-6307 proportional counter, primarily in high humidity and swimming-pool reactor applications. The housing serves both as a watertight container and an electrical insulation between the detector and ground. This latter feature minimizes ground loop pickup problems.

The WL-22717 and WL-22717A are constructed of aluminum outer case, end caps and fittings. All exterior metal surfaces are alodited to extend the useful life while submerged in water or water vapor. The housing is supplied with an 80 foot length of RG 149/U low-noise coaxial cable, with a connector to mate to the detector inside and an integral dual-seal collar for watertight entry of the cable to the detector tube. The entire assembly is demountable, by the user, to permit servicing of the detector or cable

The WL-22717 has a bottom cap with a tapped hole to facilitate adding ballast for submersion. The WL-22717A features a ballast, sufficient for submersion, installed on the bottom cap of the tube. This ballast may be removed by the customer.

MECHANICAL

Diameter	1-5/8 Inches
Overall Length (Less Cable)	
WL-22717	21 Inches
WL-22717A	23 Inches
Net Weight (Less Cable)	
WL-22717	3-1/2 Pounds
WL-22717A	8-1/2 Pounds
Shipping Weight (Complete)	
WL-22717	15 Pounds
WL-22717A	20 Pounds

MATERIALS

Outer Case & Fittings	Aluminum
Cable	RG 149/U

MAXIMUM RATINGS

Submersion Depth	30 Feet of Water
Temperature	175° F

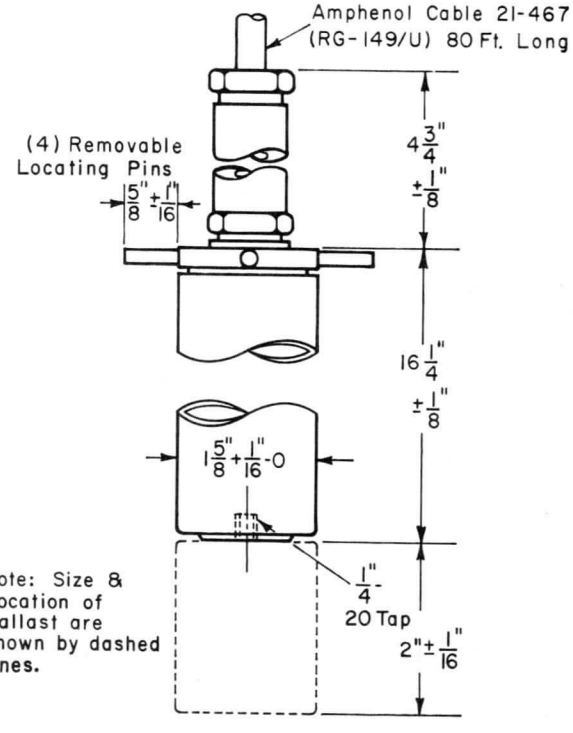

TOP VIEW

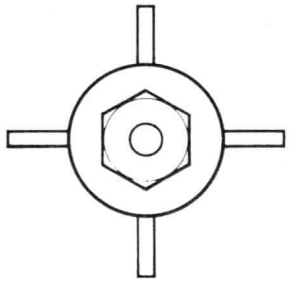

The information contained herein is supplied without assuming responsibility for infringement of patents or other rights of third parties which may result from its use. No license is granted by implication or otherwise under any patent or patent rights of Westinghouse Electric Corporation.

PRINTED IN U.S.A.

Westinghouse

WL-22718
WL-22718A

February 1, 1963

HERMETICALLY SEALED DETECTOR THIMBLE TYPES WL-22718 AND WL-22718A FOR USE WITH TYPE WL-6376 AND WL-8073

The WL-22718 and WL-22718A are designed for use with the WL-6376 fission counter primarily in high humidity and swimming-pool reactor applications. The housing serves both as a watertight container and an electrical insulation between the detector and ground. This latter feature minimizes ground loop pickup problems.

The WL-22718 and WL-22718A are constructed of aluminum outer case, end caps and fittings. All exterior metal surfaces are alodited to extend the useful life while submerged in water or water vapor. The housing is supplied with an 80 foot length of Amphenol 21-541 low-noise coaxial cable, with a connector to mate to the detector inside and an integral dual-seal collar for watertight entry of the cable to the detector tube. The entire assembly is demountable, by the user, to permit servicing of the detector or cables.

The WL-22718 and WL-22718A have a top cap with 2 eye-bolts for attachment of lifting cables. The WL-22718 has a bottom cap with tapped holes to facilitate adding ballast for submersion. The WL-22718A features a ballast, sufficient for submersion, installed on the bottom cap of the tube. This ballast may be removed by the customer.

MECHANICAL

Diameter	2-7/8 Inches
Overall Length (Less Cable & Eye-bolts)	
WL-22718	23-1/4 Inches
WL-22718A	25 Inches
Net Weight (Less Cable)	
WL-22718	3 Pounds
WL-22718A	7 Pounds
Shipping Weight (Complete)	
WL-22718	13 Pounds
WL-22718A	17 Pounds

MATERIALS

Outer Case & Fittings	Aluminum
Cable	Amphenol 21-541

MAXIMUM RATINGS

Submersion Depth	30 Feet of Water
Temperature	175° F

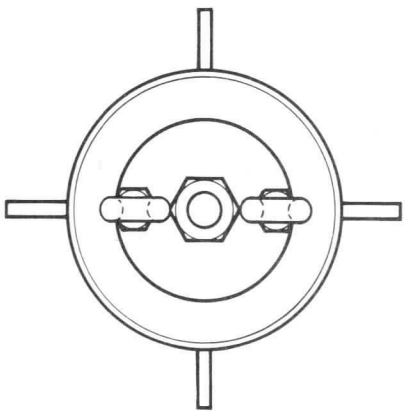

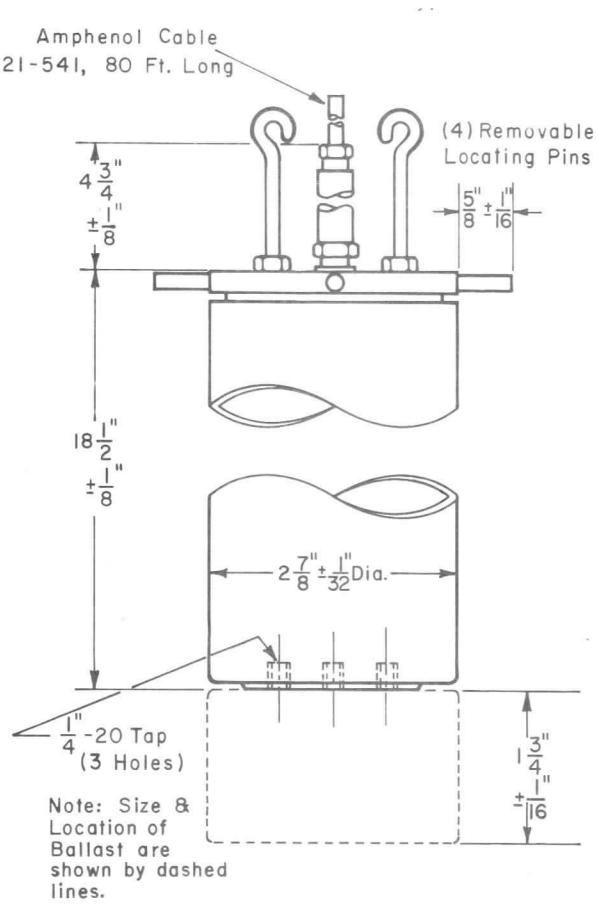

The information contained herein is supplied without assuming responsibility for infringement of patents or other rights of third parties which may result from its use. No license is granted by implication or otherwise under any patent or patent rights of Westinghouse Electric Corporation.

PRINTED IN U.S.A.

Neutron & Radiation Detector Section
WESTINGHOUSE ELECTRIC CORPORATION, ELECTRONIC TUBE DIVISION, ELMIRA, NEW YORK

Westinghouse

WL-22719
WL-22719A

February 1, 1963

HERMETICALLY SEALED DETECTOR THIMBLE TYPES WL-22719 AND WL-22719A FOR USE WITH TYPE WL-6937 AND WL-8075

The WL-22719 and WL-22719A are designed for use with the WL-6937 uncompensated ionization chamber, primarily in high humidity and swimming-pool reactor applications. The housing serves both as a watertight container and an electrical insulation between the detector and ground. This latter feature minimizes ground loop pickup problems.

The WL-22719 and WL-22719A are constructed of aluminum outer case, end caps and fittings. All exterior metal surfaces are alodited to extend the useful life while submerged in water or water vapor. The housing is supplied with two 80 foot lengths of Amphenol 21-541 low-noise coaxial cable, each with a connector to mate to the detector inside and an integral dual-seal collar for watertight entry of the cables to the detector tube. The entire assembly is demountable, by the user, to permit servicing of the detector or cables.

The WL-22719 and WL-22719A have a top cap with 2 eye-bolts for attachment of lifting cables. The WL-22719 has a bottom cap with tapped holes to facilitate adding ballast for submersion. The WL-22719A features a ballast, sufficient for submersion, installed on the bottom cap of the tube. This ballast may be removed by the customer.

MECHANICAL

Diameter	4 Inches
Overall Length (Less Cable & Eye-bolts)	
WL-22719	25-3/4 Inches
WL-22719A	27-1/2 Inches
Net Weight (Less Cable)	
WL-22719	7 Pounds
WL-22719A	17 Pounds
Shipping Weight (Complete)	
WL-22719	20 Pounds
WL-22719A	30 Pounds

MATERIALS

Outer Case & Fittings	Aluminum
Cables	Amphenol 21-541

MAXIMUM RATINGS

Submersion Depth	30 Feet of Water
Temperature	175° F

TOP VIEW

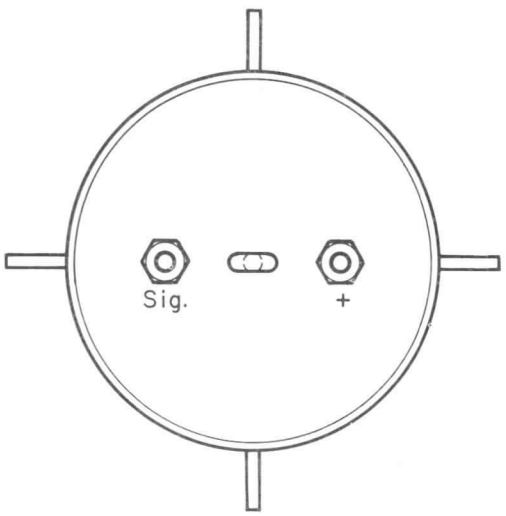

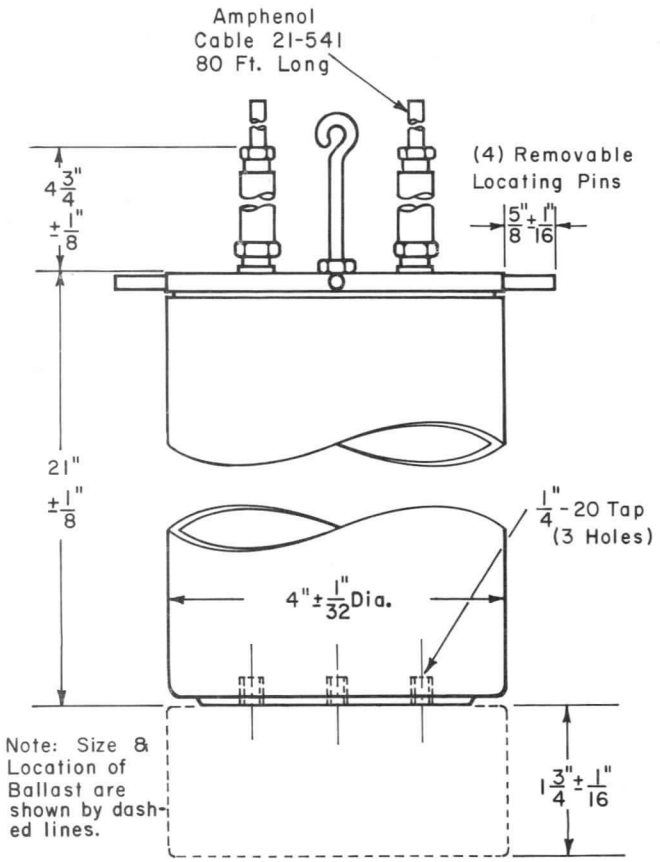

The information contained herein is supplied without assuming responsibility for infringement of patents or other rights of third parties which may result from its use. No license is granted by implication or otherwise under any patent or patent rights of Westinghouse Electric Corporation.

PRINTED IN U.S.A.

Neutron & Radiation Detector Section

Westinghouse

WL-22791

December 1, 1963

B_{10} LINED PROPORTIONAL COUNTER TYPE WL-22791

The WL-22791 proportional counter is designed to detect neutrons of thermal energy in the range from 10^{-1} to 5×10^4 neutrons/cm^2/second. This counter is extremely rugged, designed to meet military specification MIL-S-901 for shock and MIL-Std-167 (type 1) for vibration, and will operate in any position at temperatures up to 310° F.

The materials used in the construction of the detector, including the connector, have been selected for low activation properties, thereby facilitating handling after exposure to neutron fluxes. The thermal neutron sensitivity of the WL-22791 is approximately 10 counts/neutron/cm^2 at an operating voltage of 800 volts.

MECHANICAL

Maximum Diameter	1-1/32	Inches
Maximum Over-all Length	30-1/2	Inches
Approximate Sensitive Length	26	Inches
Net Weight	10	Ounces
Shipping Weight	5	Pounds

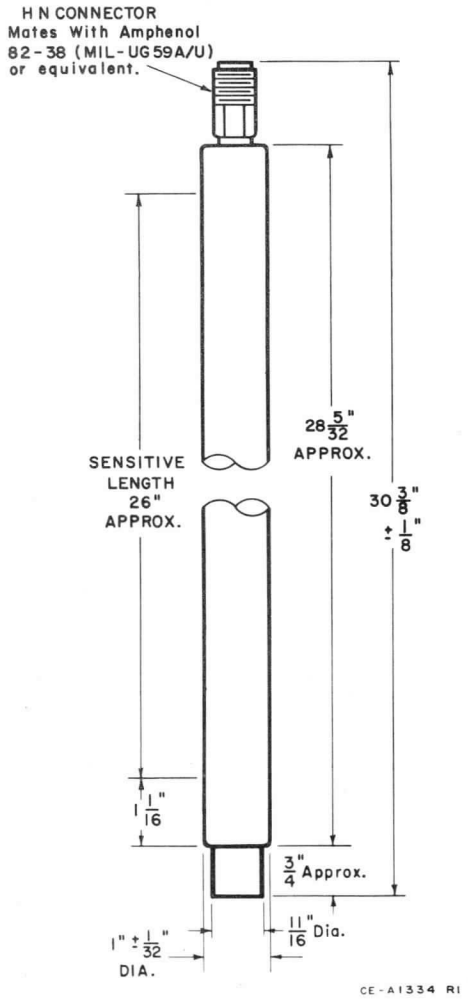

MATERIALS

Body	EC Grade Aluminum
Electrode	0.001 Inch Dia. Tungsten
Connector	Aluminum
Insulation:	
Electrode Supports	Alumina
Connector	Polystyrene
Neutron Sensitive Material:	
Content	Boron Highly Enriched in Boron-10
Gas Fill	Argon (95%) - CO_2 (5%)

IMPEDANCE

Resistance (minimum)	10^{12}	Ohms
Capacitance (approx.)	20	$\mu\mu$f

MAXIMUM RATINGS

Voltage Between Electrodes	1500	Volts
Temperature	310	°F
External Pressure	180	Pounds/Inch^2
Operating:		
Thermal Neutron Flux	4×10^4	nv
Non-operating:		
Thermal Neutron Flux (Note 1)	5×10^{10}	nv
Gamma Flux (Note 1)	10^5	R/hr

TYPICAL OPERATION (Note 2)

Operating Voltage	800	Volts
Thermal Neutron Flux Range	10^{-1} to 5×10^4	nv
Sensitivity	.10	cps/nv
Plateau Characteristics:		
Length (minimum)	150	Volts
Over-all Slope (maximum)	0.3	%/Volt
Output Pulse Characteristics:		
Amplitude (approx. unloaded)	80	Millivolts
Inherent Rise Time (average)	2×10^{-7}	Seconds
Inherent Background (Note 3) (approx.)	0.2	Counts/second

NOTES

1. When in flux levels exceeding the maximum operating level, the high voltage should be removed, and the tube shorted through a maximum of 3 megohms.
2. These characteristics will vary depending upon the associated circuitry. For application details see the section entitled "Proportional Counter Operation".
3. In radiation free areas, and with low-noise circuitry, values of the order of 4 to 6 counts per minute have been observed. High humidity environments should be avoided since they may impair performance.

PRINTED IN U.S.A.

Neutron & Radiation Detector Section

The information contained herein is supplied without assuming responsibility for infringement of patents or other rights of third parties which may result from its use. No license is granted by implication or otherwise under any patent or patent rights of Westinghouse Electric Corporation.

Westinghouse

WL-22792

December 15, 1963

B_{10} LINED PROPORTIONAL COUNTER TYPE WL-22792

The WL-22792 proportional counter is designed to detect neutrons of thermal energy in the range from 3×10^{-1} to 1.7×10^{5} neutrons/cm²/second. This counter is extremely rugged, designed to meet military specification MIL-S-901 for shock and MIL-Std-167 (type 1) for vibration, and will operate in any position at temperatures up to 310°F.

The materials used in the construction of the detector, including the connector, have been selected for low activation properties, thereby facilitating handling after exposure to neutron fluxes. The thermal neutron sensitivity of the WL-22792 is approximately 3.0 counts/neutron/cm² at an operating voltage of 750 volts.

MECHANICAL

Maximum Diameter	1-1/32	Inches
Maximum Overall Length	12-7/8	Inches
Approximate Sensitive Length	8-5/8	Inches
Net Weight	6	Ounces
Shipping Weight	3	Pounds

MATERIALS

Body	EC Grade Aluminum
Electrode	0.001 Inch Dia. Tungsten
Connector	Aluminum
Insulation:	
Electrode Supports	Alumina Ceramic
Connector	Polystyrene
Neutron Sensitive Material:	
Content	Boron Highly Enriched in Boron-10
Gas Fill	Argon (95%) - CO_2 (5%)

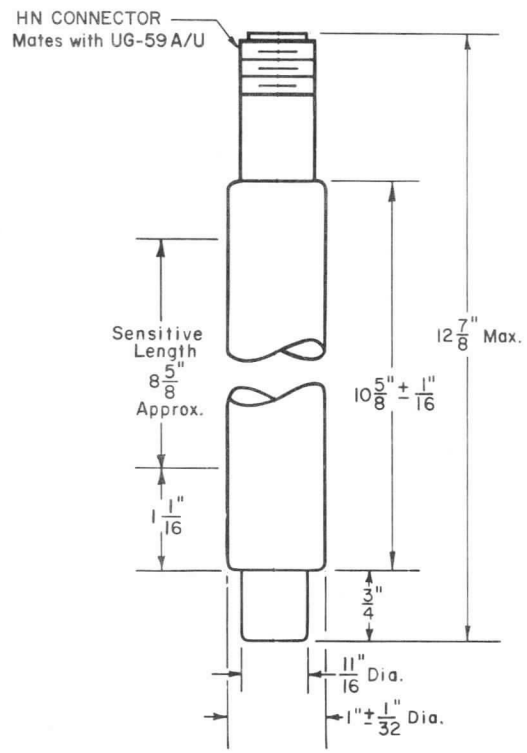

IMPEDANCE

Resistance (minimum)	10^{12}	Ohms
Capacitance (approx.)	12	pf

MAXIMUM RATINGS

Voltage Between Electrodes	900	Volts
Temperature	310	°F
External Pressure (Note 3)	180	Pounds/Inch²
Operating:		
Thermal Neutron Flux	3×10^{5}	nv
Non-operating:		
Thermal Neutron Flux (Note 1)	10^{10}	nv
Gamma Flux (Note 1)	10^{5}	R/hr

TYPICAL OPERATION (Note 2)

Operating Voltage	750	Volts
Thermal Neutron Flux Range:		
With Conventional Circuitry	3×10^{-1} to 1.7×10^{5}	nv
With Special Circuitry (Note 4)	10^{-1} to 3×10^{5}	nv
Sensitivity	3.0	cps/nv
Plateau Characteristics:		
Length (minimum)	150	Volts
Overall Slope (maximum)	0.3	%/Volt
Output Pulse Characteristics:		
Amplitude (approx. unloaded)	80	Millivolts
Inherent Rise Time (average)	2×10^{-7}	Seconds
Inherent Background (Note 5) (approx.)	0.2	Counts/Second

NOTES

1. When in flux levels exceeding the maximum operating level the high voltage should be removed, and the tube shorted through a maximum of 3 megohms.
2. These characteristics will vary depending upon the associated circuitry. For application details see the section entitled "Proportional Counter Operation".
3. The pressurizing atmosphere must be dry and non-corrosive.
4. With low-noise, high resolution circuitry.
5. In radiation free areas, and with low-noise circuitry, values of the order of 4 to 6 counts per minute have been observed. High humidity environments should be avoided since they may impair performance.

PRINTED IN U.S.A.

Neutron & Radiation Detector Section

The information contained herein is supplied without assuming responsibility for infringement of patents or other rights of third parties which may result from its use. No license is granted by implication or otherwise under any patent or patent rights of Westinghouse Electric Corporation.

Westinghouse

WL-22793

December 15, 1963

B_{10} LINED PROPORTIONAL COUNTER TYPE WL-22793

The WL-22793 proportional counter is designed to detect neutrons of thermal energy in the range from 2.5×10^{-1} to 1.2×10^{5} neutrons/cm²/second. This counter is extremely rugged, designed to meet military specification MIL-S-901 for shock and MIL-Std-167 (type 1) for vibration, and will operate in any position at temperatures up to 310°F.

The materials used in the construction of the detector, including the connector, have been selected for low activation properties, thereby facilitating handling after exposure to neutron fluxes. The thermal neutron sensitivity of the WL-22793 is approximately 4.0 counts/neutron/cm² at an operating voltage of 750 volts.

MECHANICAL

Maximum Diameter	1-1/32	Inches
Maximum Overall Length	.15	Inches
Approximate Sensitive Length	10-1/2	Inches
Net Weight	8	Ounces
Shipping Weight	3	Pounds

MATERIALS

Body	EC Grade Aluminum
Electrode	0.001 Inch Dia. Tungsten
Connector	Aluminum
Insulation:	
Electrode Supports	Alumina Ceramic
Connector	Polystyrene
Neutron Sensitive Material:	
Content	Boron Highly Enriched in Boron-10
Gas Fill	Argon (95%) - CO_2 (5%)

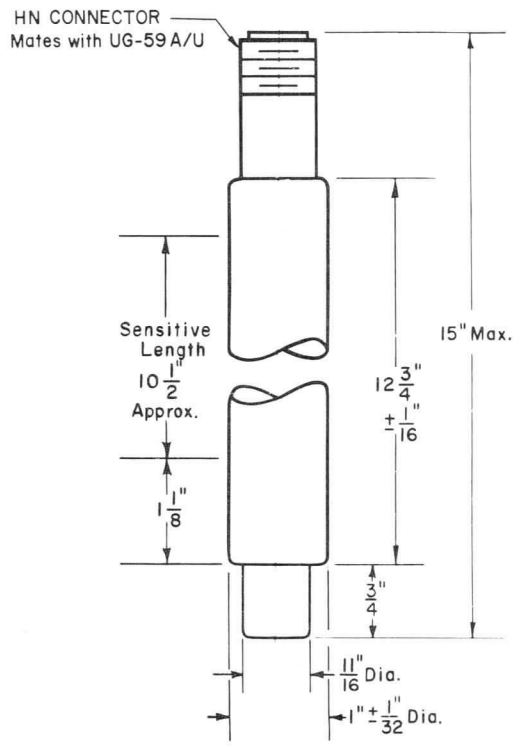

IMPEDANCE

Resistance (minimum)	10^{12}	Ohms
Capacitance (approx.)	14	$\mu\mu$f

MAXIMUM RATINGS

Voltage Between Electrode	900	Volts
Temperature	310	°F
External Pressure (Note 3)	180	Pounds/Inch²
Operating:		
Thermal Neutron Flux	2.5×10^{5}	nv
Non-operating:		
Thermal Neutron Flux (Note 1)	10^{10}	nv
Gamma Flux (Note 1)	10^{5}	R/hr.

TYPICAL OPERATION (Note 2)

Operating Voltage	750	Volts
Thermal Neutron Flux Range:		
With Conventional Circuitry	2.5×10^{-1} to 10^{5}	nv
With Special Circuitry (Note 4)	10^{-1} to 2.5×10^{5}	nv
Sensitivity	4.0	cps/nv
Plateau Characteristics:		
Length (minimum)	150	Volts
Overall Slope (maximum)	0.3	%/Volt
Output Pulse Characteristics:		
Amplitude (approx. unloaded)	80	Millivolts
Inherent Rise Time (average)	$.2 \times 10^{-7}$	Seconds
Inherent Background (Note 5) (approx.)	0.2	Counts/Second

NOTES

1. When in flux levels exceeding the maximum operating level the high voltage should be removed, and the tube shorted through a maximum of 3 megohms.
2. These characteristics will vary depending upon the associated circuitry. For application details see the section entitled "Proportional Counter Operation".
3. The pressurizing atmosphere must be dry and non-corrosive.
4. With low-noise, high resolution circuitry.
5. In radiation free areas, and with low-noise circuitry, values of the order of 4 to 6 counts per minute have been observed. High humidity environments should be avoided since they may impair performance.

PRINTED IN U.S.A.

Neutron & Radiation Detector Section

The information contained herein is supplied without assuming responsibility for infringement of patents or other rights of third parties which may result from its use. No license is granted by implication or otherwise under any patent or patent rights of Westinghouse Electric Corporation.

Westinghouse®

WL-23033

August 15, 1964

HIGH TEMPERATURE FISSION COUNTER TYPE WL-23033

The WL-23033 fission counter is designed to detect thermal neutrons in the range of 1.4 to 1.4 × 10^5 neutrons/cm^2/second. The WL-23033 is extremely rugged, meeting MIL-S-901 for shock and MIL-Std-167 (type 1) for vibration, and may be operated in any position at temperatures up to 700° F.

The WL-23033 consists of an aluminum outer case and electrodes, with high purity alumina ceramic insulators throughout, including those used in the type HN coaxial connector. In typical operation, the counter has a thermal neutron sensitivity of 0.7 counts/neutron/cm^2 throughout a wide range of applied voltage.

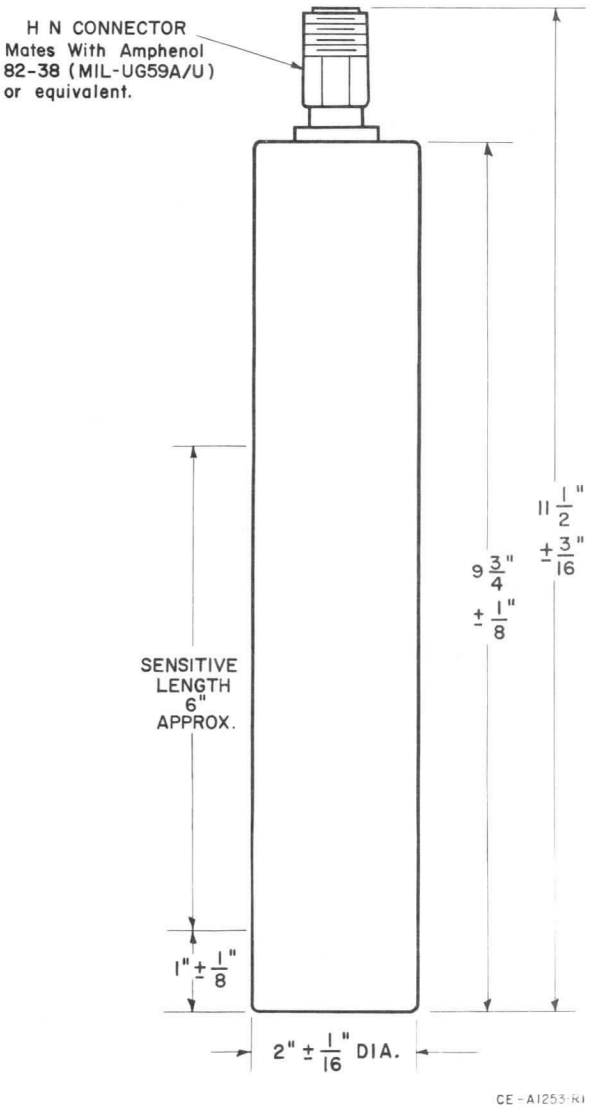

MECHANICAL

Maximum Diameter	2-1/16	Inches
Maximum Overall Length	11-11/16	Inches
Approximate Sensitive Length	6	Inches
Net Weight	1-3/4	Pounds
Shipping Weight	12	Pounds

MATERIALS

Outer Case	Aluminum
Electrodes	Aluminum
Insulation	Alumina Ceramic
Neutron Sensitive Material:	
Content	U_3O_8 Enriched to more than 90% in U-235
Thickness	2 mg/cm^2
Total Quantity	1.72 Grams
Gas Filling	Argon-Nitrogen Mixture
Gas Pressure	76 Cm of Hg

IMPEDANCE

Resistance (Minimum)	10^7	Ohms
Capacitance	190	pf

MAXIMUM RATINGS

Voltage Between Electrodes	1000	Volts
Temperature	700	°F
External Pressure (Note 2)	180	Pounds/$Inch^2$
Thermal Neutron Flux	3 × 10^{10}	nv

TYPICAL OPERATION (Note 1)

Operating Voltage	300	Volts
Operating Voltage Plateau (See Figure 2)	250 to 800	Volts
Thermal Neutron Flux Range	1.4 to 1.4 × 10^5	nv
Output Pulse Characteristics:		
Amplitude (unloaded)	2 × 10^{-4}	Volts
Inherent Rise Time (average)	2 × 10^{-7}	Seconds

NOTES

1. The sensitivity is 0.7 counts/neutron/cm^2 when the alpha background counting rate of the naturally radioactive uranium is adjusted to 5 counts/second. By varying the pulse height selector on the associated circuitry other sensitivities are available. See Figure 1.
2. The pressurizing atmosphere must be dry and non-corrosive.

PRINTED IN U.S.A.
Initial Issue: Supersedes WX-4344

Radiation Detector Section
WESTINGHOUSE ELECTRIC CORPORATION, ELECTRONIC TUBE DIVISION, ELMIRA, NEW YORK

COUNTING RATE CHARACTERISTIC

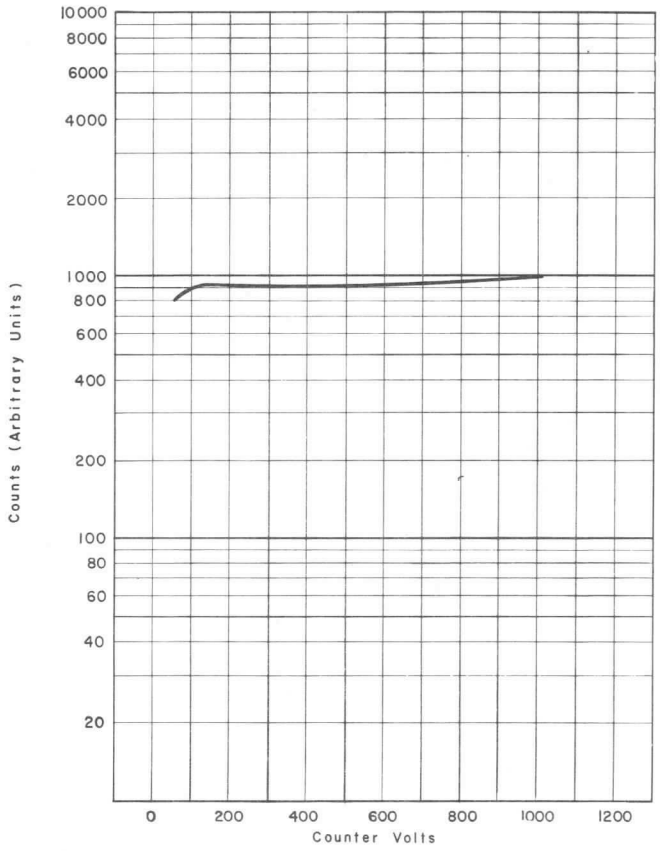

FIGURE 1

COUNTER SENSITIVITY AS FUNCTION OF PULSE HEIGHT SETTING

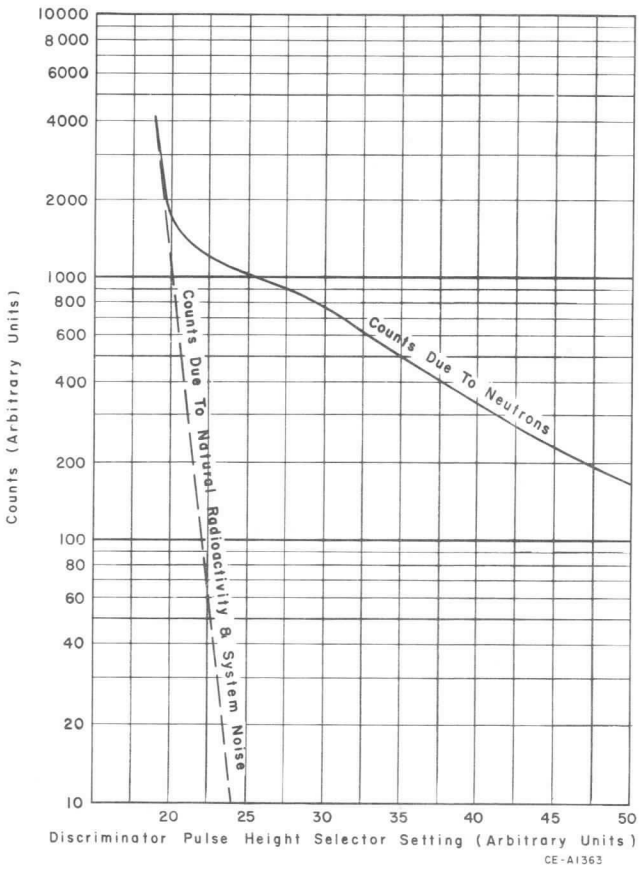

FIGURE 2

The information contained herein is supplied without assuming responsibility for infringement of patents or other rights of third parties which may result from its use. No license is granted by implication or otherwise under any patent or patent rights of Westinghouse Electric Corporation.

August 15, 1965

HIGH SENSITIVITY BF_3 PROPORTIONAL COUNTER TYPE WL-23055

The WL-23055 proportional counter is designed to detect neutrons of thermal energies in the range from 1.25×10^{-2} to 1.25×10^{4} neutrons/cm²/second. It is a multiunit BF_3 proportional counter. The WL-23055 is rugged in construction, designed to meet MIL-S-901 for shock and MIL-Std-167 (type 1) for vibration, and will operate in any position at temperatures up to 310°F.

The detector consists of four type 7317 proportional counters surrounded by a heavy walled aluminum outer case with a hermetically sealed HN connector permitting operation in high humidity environments. The materials used in the detector have been selected for low activation properties, thereby facilitating handling after exposure to neutron fluxes. The thermal neutron sensitivity of the WL-23055 is approximately 35 counts/neutron/cm² at an operating voltage of 2000 volts.

MATERIALS

Outer Case	Aluminum
Element Body	EC Grade Aluminum
Electrodes	0.001 Inch Dia. Tungsten
Insulation:	
Elemental Detectors	Alumina Ceramic
Connector	Polystyrene
Neutron Sensitive Material:	
Content	Boron Trifluoride Enriched to 96% in Boron – 10
Pressure	55 Cm of Hg

IMPEDANCE

Resistance (minimum)	10^{11}	Ohms
Capacitance (Approx.)	70	pF

HN Receptacle Mates with Mil. UG-59A/U or equivalent.

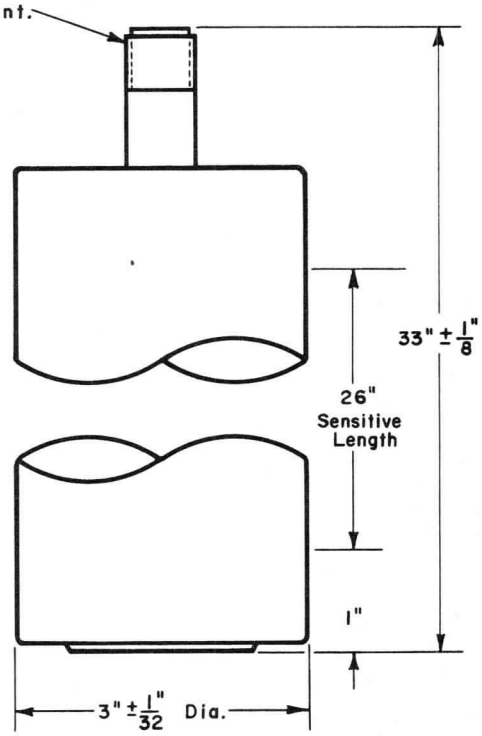

MECHANICAL

Maximum Diameter	3-1/32	Inches
Maximum Overall Length	33-1/8	Inches
Approximate Sensitive Length	26	Inches
Connector	Hermetically Sealed Type HN	
Net Weight	.10	Pounds
Shipping Weight	.30	Pounds

MAXIMUM RATINGS

Voltage Between Electrodes	2500	max.	Volts
Temperature	310	max.	Degrees F
External Pressure	180	max.	Pounds/Inch²
Operating:			
Thermal Neutron Flux	1.25×10^{4}	max.	nv
Non-Operating:			
Thermal Neutron Flux (Note 1)	10^{10}	max.	nv
Gamma Flux (Note 1)	10^{5}	max.	R/hr

TYPICAL OPERATION (Note 2)

Operating Voltage	2000	Volts
Thermal Neutron Flux Range:		
With Conventional Circuitry	2.85×10^{-2} to 2.85×10^{3}	nv
With Special Circuitry (Note 3)	1.25×10^{-2} to 1.25×10^{4}	nv
Sensitivity	35	cps/nv
Plateau Characteristics:		
Length (minimum)	200	Volts
Overall Slope (maximum)	.4	Per-cent
Output Pulse Characteristics:		
Amplitude: (Approx. Unloaded)	.60	Millivolts
Inherent Rise Time	10^{-7}	Seconds
Inherent Background (Note 4)	0.20	Counts/Second

NOTES

1. When in radiation levels exceeding the maximum operating levels the high voltage should be removed and the tube shorted through a maximum of three megohms.
2. These characteristics will vary depending upon the associated circuitry.
3. An extension of operating range of approximately the magnitude indicated may be obtained with the use of low-noise, high resolution circuitry.
4. In radiation-free areas and with low-noise circuitry.

PRINTED IN U.S.A. SUPERSEDES WX-4337 PROPORTIONAL COUNTER

The information contained herein is supplied without assuming responsibility for infringement of patents or other rights of third parties which may result from its use. No license is granted by implication or otherwise under any patent or patent rights of Westinghouse Electric Corporation.

Westinghouse

WL-23056

August 15, 1966

HIGH SENSITIVITY BF_3 PROPORTIONAL COUNTER TYPE WL-23056

The WL-23056 proportional counter is designed to detect neutrons of thermal and intermediate energies in the range from 1×10^{-2} to 1×10^{4} neutrons/cm²/second. It is a multi-unit BF_3 proportional counter in which the outer case is electrically insulated from the elements, thereby avoiding ground loop problems in circuitry. The detector is provided with an integral 40 foot length of Amphenol 621-102 Triaxial cable. The cable and outer case are hermetically sealed permitting operation in high humidity environment. The WL-23056 is rugged in construction and will operate in any position up to 175°F.

The WL-23056 consists of four type 7317 proportional counters positioned and insulated by a polyethylene moderator block within a heavy walled aluminum outer case. The materials used in the detector have been selected for low activation properties, thereby facilitating handling after exposure to neutron fluxes. The thermal neutron sensitivity of the WL-23056 is approximately 45 counts/neutron/cm² at an operating voltage of 2000 volts.

MECHANICAL

Width & Thickness	7.938 + 0 − 0.060 × 3.188 + 0 − 0.060	Inches
Overall Length	33.50 ± 0.13	Inches
Approximate Sensitive Length	26	Inches
Net Weight	30	Pounds
Shipping Weight	60	Pounds

MATERIALS

Outer Case	Aluminum
Element Body	EC Grade Aluminum
Electrodes	0.001 Inch Dia. Tungsten
Cable	Amphenol 621-102
Insulation:	
Elemental Detectors	Alumina Ceramic
Moderator	Polyethylene
Neutron Sensitive Material:	
Content	Boron Trifluoride Enriched to 96% in Boron −10
Pressure	55 Cm of Hg

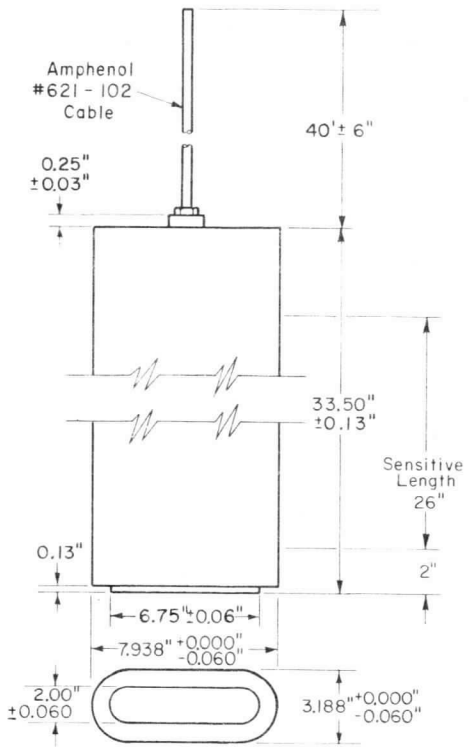

IMPEDANCE

Resistance (Minimum)	10^{10}	Ohms
Capacitance: (Approx.)		
Detector Only	120	pF
Detector with 40' of Cable	780	pF

MAXIMUM RATINGS

Voltage Between Electrodes	2500 max.	Volts
Temperature	175 max.	Degrees F
External Pressure (Note 1)	180 max.	Pounds/Inch²
Operating:		
Thermal Neutron Flux	10^{4} max.	nv
Non Operating:		
Thermal Neutron Flux (Note 2)	10^{10} max.	nv
Gamma Flux (Note 2)	10^{5} max.	R/hr

TYPICAL OPERATION: (Note 3)

Operating Voltage (Note 4)	2000	Volts
Thermal Neutron Flux Range:		
With Conventional Circuitry	2.2×10^{-2} to 2.2×10^{3}	nv
With Special Circuitry (Note 5)	1×10^{-2} to 1×10^{4}	nv
Sensitivity	45	CPS/nv
Plateau Characteristics:		
Length (Minimum)	200	Volts
Overall Slope (Maximum)	4	Per Cent
Output Pulse Characteristics:		
Amplitude (Approx. Unloaded)	60	Millivolts
Inherent Rise Time (Average)	10^{-7}	Seconds
Inherent Background (Note 6)	0.25	Count/Second

NOTES

1. The pressurizing atmosphere must be dry and non-corrosive. The tube may not be immersed in water.
2. When in radiation levels exceeding the maximum operating levels, the high voltage should be removed and the tube shorted through a maximum of three megohms.
3. These characteristics will vary depending upon the associated circuitry.
4. Dependent on length of cable used from detector to preamplifier.
5. With low noise, high resolution circuitry.
6. In radiation free areas, and with low-noise circuitry, values of the order of 12 to 15 counts per minute have been observed.

PRINTED IN U.S.A. NEW INFORMATION PROPORTIONAL COUNTER

The information contained herein is supplied without assuming responsibility for infringement of patents or other rights of third parties which may result from its use. No license is granted by implication or otherwise under any patent or patent rights of Westinghouse Electric Corporation.

Westinghouse®

WL-23057

October 15, 1965

BF_3 PROPORTIONAL COUNTER TYPE WL-23057

The WL-23057 proportional counter is designed to detect neutrons of thermal energy in the range from 5.0×10^{-2} to 5×10^{3} neutrons/cm²/second. The counter is extremely rugged, designed to meet military specification MIL-S-901 for Shock and MIL-STD-167 (Type 1) for Vibration, and will operate in any position at temperatures up to 250°F.

The materials used in the construction of the detector, including the connector, have been selected for low activation properties, thereby reducing the inherent background counting rate.

The thermal neutron sensitivity of the WL-23057 is approximately 19 counts/neutron/cm².

MECHANICAL

Maximum Diameter	1-1/32	Inches
Maximum Overall Length	15-9/16	Inches
Approximate Sensitive Length	12	Inches
Net Weight	8	Ounces
Shipping Weight	3	Pounds

MATERIALS

Body	EC Grade Aluminum
Electrode	0.001 Inch Dia. Tungsten
Connector	Magnesium
Insulation:	
Electrode Supports	Alumina Ceramic
Connector	Polystyrene
Neutron Sensitive Material:	
Content	Boron Trifluoride Enriched to 96% in Boron-10
Pressure	160 Cm of Hg

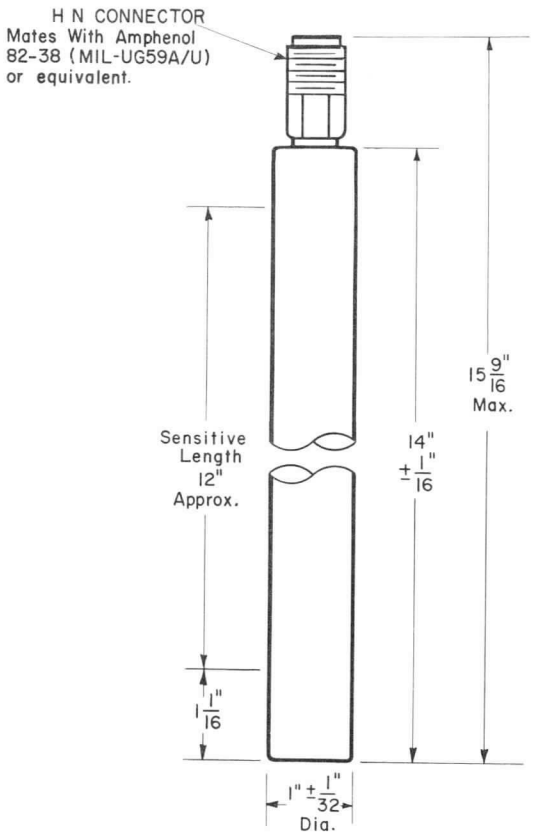

IMPEDANCE

Resistance (minimum)	10^{11}	Ohms
Capacitance (Approx.)	5	pF

MAXIMUM RATINGS

Voltage Between Electrodes	3600	Volts
Temperature	250	Degrees F
External Pressure (Note 1)	180	Pounds/Inch²
Operating:		
Thermal Neutron Flux	2.6×10^{4}	nv
Non-Operating:		
Thermal Neutron Flux (Note 2)	10^{10}	nv
Gamma Flux (Note 2)	10^{5}	R/hr

TYPICAL OPERATION (Note 3)

Operating Voltage	2200	Volts
Thermal Neutron Flux Range:		
With Conventional Circuitry	5.0×10^{-2} to 5.0×10^{3}	nv
With Special Circuitry (Note 4)	2.6×10^{-2} to 2.6×10^{4}	nv
Sensitivity	19	CPS/nv
Plateau Characteristics:		
Length (minimum)	200	Volts
Overall Slope (maximum)	4	Per-cent
Output Pulse Characteristics:		
Amplitude (Approx. Unloaded)	60	Millivolts
Inherent Rise Time (Average)	10^{-7}	Seconds
Inherent Background (Note 5) (Approx.)	0.2	Counts/Second

NOTES

1. The pressurizing atmosphere must be dry and non-corrosive.
2. When in flux levels exceeding the maximum operating level the high voltage should be removed, and the tube shorted through a maximum of 3 megohms.
3. Data given are for high impedance circuitry. These characteristics will vary depending upon the associated circuitry.
4. With low-noise, high resolution circuitry.
5. In radiation free areas, and with low-noise circuitry, values of the order of 4 to 6 counts per minute have been observed. High humidity environments should be avoided since they may impair performance.

PRINTED IN U.S.A. SUPERSEDES WX-30236 PROPORTIONAL COUNTER

The information contained herein is supplied without assuming responsibility for infringement of patents or other rights of third parties which may result from its use. No license is granted by implication or otherwise under any patent or patent rights of Westinghouse Electric Corporation.

WESTINGHOUSE ELECTRIC CORPORATION, ELECTRONIC TUBE DIVISION, ELMIRA, NEW YORK

BF_3 PROPORTIONAL COUNTER TYPE WL-23058

The WL-23058 proportional counter is designed to detect neutrons of thermal energy in the range from 7.5×10^{-2} to 7.5×10^{3} neutrons/cm²/second. The counter is extremely rugged, designed to meet military specification MIL-S-901 for Shock and MIL-STD-167 (Type 1) for Vibration, and will operate in any position at temperatures up to 250°F.

The materials used in the construction of the detector, including the connector, have been selected for low activation properties, thereby reducing the inherent background counting rate. The thermal neutron sensitivity of the WL-23058 is approximately 13 counts/neutron/cm².

MECHANICAL

Maximum Diameter	1-1/32 Inches
Maximum Overall Length	12-1/8 Inches
Approximate Sensitive Length	8-5/8 Inches
Net Weight	6 Ounces
Shipping Weight	3 Pounds

MATERIALS

Body	EC Grade Aluminum
Electrode	0.004 Inch Dia. Tungsten
Connector	Magnesium
Insulation:	
Electrode Supports	Alumina Ceramic
Connector	Polystyrene
Neutron Sensitive Material:	
Content	Boron Trifluoride Enriched to 96% in Boron-10
Pressure	160 Cm of Hg

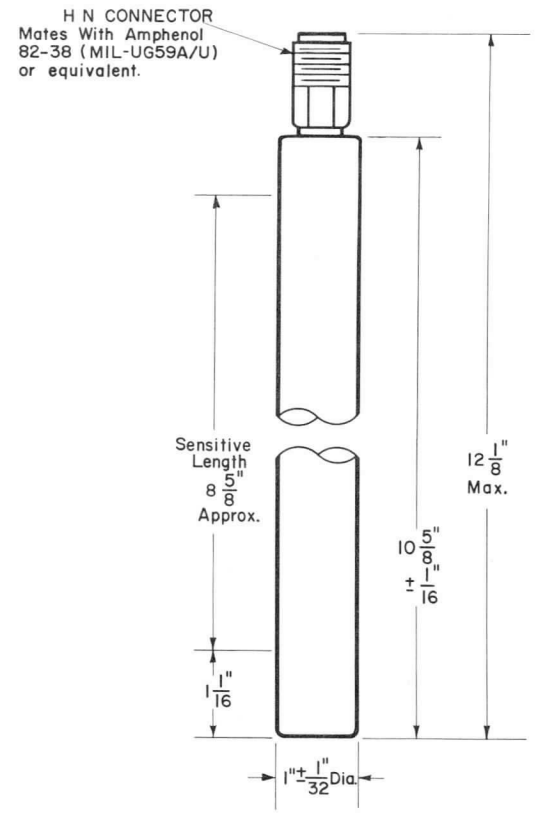

IMPEDANCE

Resistance (minimum)	10^{11} Ohms
Capacitance (Approx.)	10 pF

MAXIMUM RATINGS

Voltage Between Electrodes	6000 Volts
Temperature	250 Degrees F
External Pressure (Note 1)	180 Pounds/Inch²
Operating:	
Thermal Neutron Flux	4.0×10^{4} nv
Non-Operating:	
Thermal Neutron Flux (Note 2)	10^{10} nv
Gamma Flux (Note 2)	10^{5} R/hr

TYPICAL OPERATION (Note 3)

Operating Voltage	4100 Volts
Thermal Neutron Flux Range:	
With Conventional Circuitry	7.5×10^{-2} to 7.5×10^{3} nv
With Special Circuitry (Note 4)	4.0×10^{-2} to 4.0×10^{4} nv
Sensitivity	13 CPS/nv
Plateau Characteristics:	
Length (minimum)	200 Volts
Overall Slope (maximum)	4 Per-cent
Output Pulse Characteristics:	
Amplitude (Approx. Unloaded)	.60 Millivolts
Inherent Rise Time (Average)	10^{-7} Seconds
Inherent Background (Note 5) (Approx.)	0.2 Counts/Second

NOTES

1. The pressurizing atmosphere must be dry and non-corrosive.
2. When in flux levels exceeding the maximum operating level the high voltage should be removed, and the tube shorted through a maximum of 3 megohms.
3. Data given are for high impedance circuitry. These characteristics will vary depending upoh the associated circuitry.
4. With low-noise, high resolution circuitry.
5. In radiation free areas, and with low-noise circuitry, values of the order of 4 to 6 counts per minute have been observed. High humidity environments should be avoided since they may impair performance.

The information contained herein is supplied without assuming responsibility for infringement of patents or other rights of third parties which may result from its use. No license is granted by implication or otherwise under any patent or patent rights of Westinghouse Electric Corporation.

WESTINGHOUSE ELECTRIC CORPORATION, ELECTRONIC TUBE DIVISION, ELMIRA, NEW YORK

Westinghouse®

WL-23064

October 15, 1965

BF_3 PROPORTIONAL COUNTER TYPE WL-23064

The WL-23064 proportional counter is designed to detect neutrons of thermal energy in the range from 2.5×10^{-2} to 2.5×10^{3} neutrons/cm²/second. The counter is extremely rugged and will operate in any position at temperatures up to 300°F.

The materials used in the construction of the detector, including the connector, have been selected for low activation properties, thereby reducing the inherent background counting rate. The thermal neutron sensitivity of the WL-23064 is approximately 40 counts/neutron/cm².

MECHANICAL

Maximum Diameter	2-1/32 Inches
Maximum Overall Length	15-7/8 Inches
Approximate Sensitive Length	12 Inches
Net Weight	15 Ounces
Shipping Weight	4 Pounds

MATERIALS

Body	1100 Aluminum, 0.055" Wall
Electrode	0.002 Inch Dia. Tungsten
Connector	Magnesium
Insulation:	
Electrode Supports	Alumina Ceramic
Connector	Polystyrene
Neutron Sensitive Material:	
Content	Boron Trifluoride Enriched to 96% in Boron-10
Pressure	70 Cm of Hg

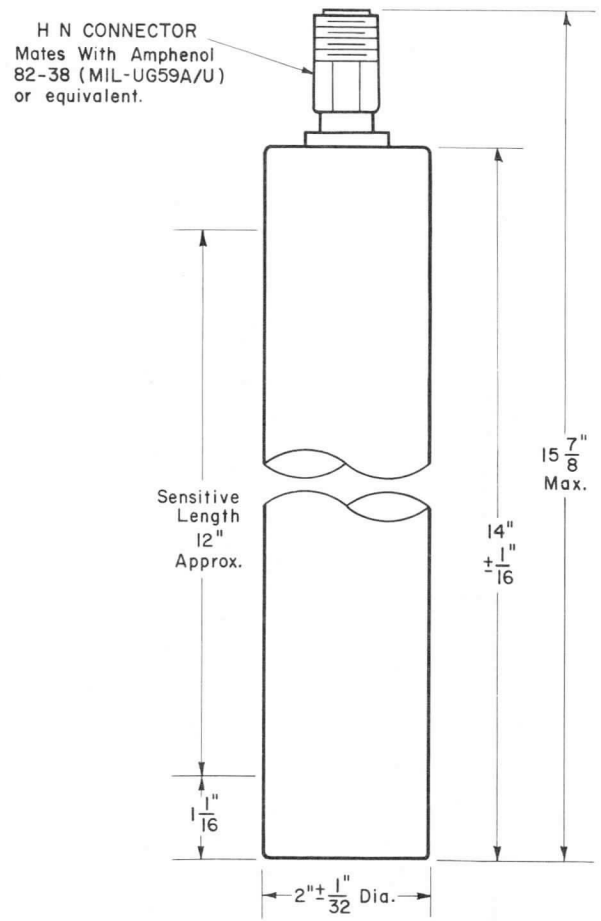

IMPEDANCE

Resistance (minimum)	10^{12} Ohms
Capacitance (Approx.)	10 pF

MAXIMUM RATINGS

Voltage Between Electrodes	3500 Volts
Temperature	300 Degrees F
External Pressure (Note 1)	180 Pounds/Inch²
Operating:	
Thermal Neutron Flux	1.25×10^{4} nv
Non-Operating:	
Thermal Neutron Flux (Note 2)	10^{10} nv
Gamma Flux (Note 2)	10^{5} R/hr

TYPICAL OPERATION (Note 3)

Operating Voltage	2100 Volts
Thermal Neutron Flux Range:	
With Conventional Circuitry	2.5×10^{-2} to 2.5×10^{3} nv
With Special Circuitry (Note 4)	1.25×10^{-2} to 1.25×10^{4} nv
Sensitivity	40 CPS/nv
Resolution	29% FWHM
Plateau Characteristics:	
Length (minimum)	300 Volts
Overall Slope	Less than 2%/100 Volts
Output Pulse Characteristics:	
Amplitude (Approx. Unloaded)	.60 Millivolts
Inherent Rise Time (Average)	10^{-7} Seconds
Inherent Background (Note 5) (Approx.)	0.2 Counts/Second

NOTES

1. The pressurizing atmosphere must be dry and non-corrosive.
2. When in flux levels exceeding the maximum operating level the high voltage should be removed, and the tube shorted through a maximum of 3 megohms.
3. Data given are for high impedance circuitry. These characteristics will vary depending upon the associated circuitry.
4. With low-noise, high resolution circuitry.
5. In radiation free areas, and with low-noise circuitry, values of the order of 4 to 6 counts per minute have been observed. High humidity environments should be avoided since they may impair performance.

PRINTED IN U.S.A. NEW INFORMATION PROPORTIONAL COUNTER

The information contained herein is supplied without assuming responsibility for infringement of patents or other rights of third parties which may result from its use. No license is granted by implication or otherwise under any patent or patent rights of Westinghouse Electric Corporation.

WESTINGHOUSE ELECTRIC CORPORATION, ELECTRONIC TUBE DIVISION, ELMIRA, NEW YORK

Westinghouse®

WL-23065

October 15, 1965

FISSION COUNTER TYPE WL-23065

The WL-23065 fission counter is designed to detect thermal neutrons in the range of 10 to 10^6 neutrons/cm^2/second. The detector is extremely rugged in construction and may be operated in any position at temperatures up to 300 °C.

The WL-23065 is constructed of aluminum with high-purity alumina ceramic insulators throughout, including those used in the type-HN coaxial connector. The WL-23065 has a thermal neutron sensitivity of approximately 0.1 counts/neutron/cm^2 throughout a wide range of applied voltage.

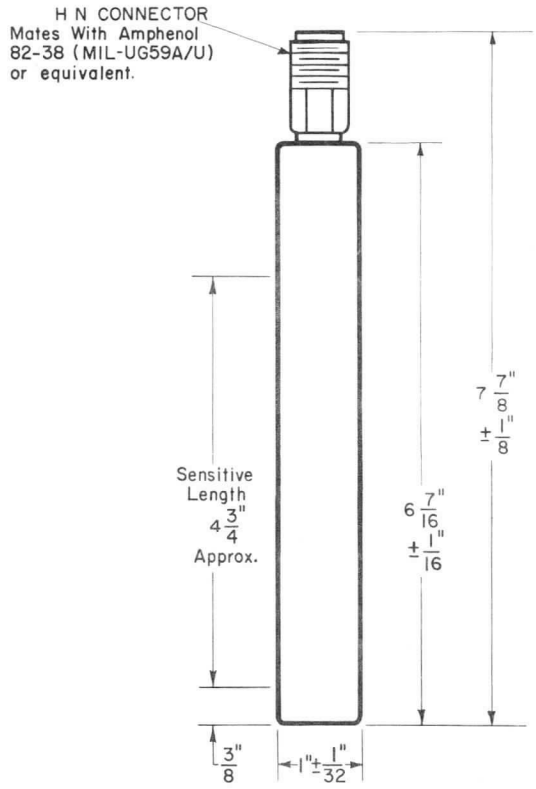

MECHANICAL

Maximum Diameter	1-1/32	Inches
Maximum Overall Length	8	Inches
Approximate Sensitive Length	4-3/4	Inches
Net Weight	4	Ounces
Shipping Weight	3	Pounds

MATERIALS

Outer Case	EC Grade Aluminum 0.032" Wall
Electrodes	EC Grade Aluminum
Insulation	Alumina Ceramic
Neutron Sensitive Material:	
Content	U_3O_8 Enriched to more than 90% in U-235
Thickness	2 mg/cm^2
Total Quantity	0.239 Grams
Gas Filling	Argon-Nitrogen Mixture
Gas Pressure	76 Cm of Hg

IMPEDANCE

Resistance (minimum)	10^9	Ohms
Capacitance (Approx.)	30	pF

MAXIMUM RATINGS

Voltage Between Electrodes	800	Volts
Temperature	300	Degrees C
External Pressure (Note 1)	180	Pounds/Inch^2
Thermal Neutron Flux	10^{11}	nv
Gamma Flux	10^6	R/hr

TYPICAL OPERATION

Operating Voltage	300	Volts
Operating Voltage Plateau	300 to 800	Volts
Thermal Neutron Flux Range	10 to 10^6	nv
Thermal Neutron Sensitivity (Note 2)	0.1	CPS/nv
Output Pulse Characteristics:		
Amplitude (Unloaded)	2×10^{-4}	Volts
Inherent Rise Time (Average)	2×10^{-7}	Seconds

NOTES

1. The pressurizing atmosphere must be dry and non-corrosive.
2. The sensitivity is 0.7 counts/neutron/cm^2 when the alpha background counting rate of the naturally radioactive uranium is adjusted to 5 counts/second. By varying the pulse height selector on the associated circuitry other sensitivities are available. See Figure 1.

The information contained herein is supplied without assuming responsibility for infringement of patents or other rights of third parties which may result from its use. No license is granted by implication or otherwise under any patent or patent rights of Westinghouse Electric Corporation.

Westinghouse®

WL-23068

October 1, 1965

B_{10} LINED PROPORTIONAL COUNTER TYPE WL-23068

The WL-23068 proportional counter is designed to detect neutrons of thermal energy in the range from 10^{-1} to 10^{5} neutrons/cm²/second. This counter is extremely rugged, designed to meet military specification MIL-S-901 for shock and MIL-Std-167 (type 1) for vibration, and will operate in any position at temperatures up to 200 °C.

The materials used in the construction of the detector, including the connector, have been selected for low activation properties, thereby reducing the inherent background counting rate. The thermal neutron sensitivity of the WL-23068 is approximately 3.0 counts/neutron/cm² at an operating voltage of 750 volts.

MECHANICAL

Maximum Diameter	1-1/32 Inches
Maximum Overall Length	12-1/8 Inches
Approximate Sensitive Length	8-5/8 Inches
Net Weight	6 Ounces
Shipping Weight	3 Pounds

MATERIALS

Body	EC Grade Aluminum
Electrode	0.001 Inch Dia. Tungsten
Connector	Magnesium
Insulation:	
Electrode Supports	Alumina Ceramic
Connector	Alumina Ceramic
Neutron Sensitive Material:	
Content	Boron Highly Enriched in Boron-10
Gas Fill	Argon (95%) - CO_2 (5%)
Pressure	20 Cm of Hg

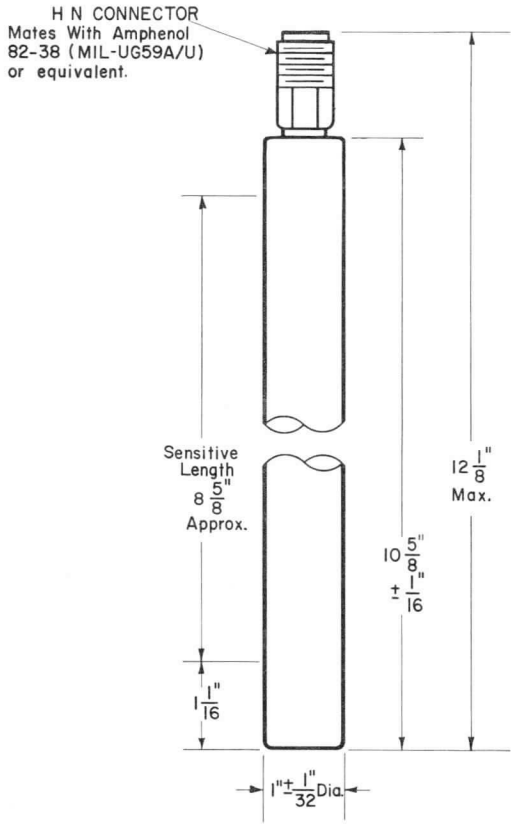

IMPEDANCE

Resistance (minimum)	10^{12} Ohms
Capacitance (Approx.)	12 pF

MAXIMUM RATINGS

Voltage Between Electrodes	1000 Volts
Temperature	200 Degrees C
External Pressure (Note 1)	180 Pounds/Inch²
Operating:	
Thermal Neutron Flux	10^{5} nv
Non-Operating:	
Thermal Neutron Flux (Note 2)	10^{10} nv
Gamma Flux (Note 2)	10^{5} R/hr

TYPICAL OPERATION (Note 3)

Operating Voltage	750 Volts
Thermal Neutron Flux Range:	
With Conventional Circuitry	3.3×10^{-1} to 3.3×10^{4} nv
With Special Circuitry (Note 4)	1.7×10^{-1} to 1.7×10^{5} nv
Sensitivity	3.0 CPS/nv
Plateau Characteristics:	
Length (minimum)	200 Volts
Overall Slope (maximum)	0.3 %/Volt
Output Pulse Characteristics:	
Amplitude (Approx. Unloaded)	80 Millivolts
Inherent Rise Time (Average)	2×10^{-7} Seconds
Inherent Background (Note 5) (Approx.)	0.2 Counts/Second

NOTES

1. The pressurizing atmosphere must be dry and non-corrosive.
2. When in flux levels exceeding the maximum operating level the high voltage should be removed, and the tube shorted through a maximum of 3 megohms.
3. These characteristics will vary depending upon the associated circuitry.
4. With low-noise, high resolution circuitry.
5. In radiation free areas, and with low-noise circuitry, values of the order of 4 to 6 counts per minute have been observed. High humidity environments should be avoided since they may impair performance.

The information contained herein is supplied without assuming responsibility for infringement of patents or other rights of third parties which may result from its use. No license is granted by implication or otherwise under any patent or patent rights of Westinghouse Electric Corporation.

Westinghouse®

WL-23069

October 15, 1965

BF_3 PROPORTIONAL COUNTER TYPE WL-23069

The WL-23069 proportional counter is designed to detect neutrons of thermal energy in the range from 0.15 to 1.5×10^4 neutrons/cm²/second. The counter is extremely rugged, designed to meet military specification MIL-S-901 for Shock and MIL-STD-167 (Type 1) for Vibration, and will operate in any position at temperatures up to 250 °F.

The materials used in the construction of the detector, including the connector, have been selected for low activation properties, thereby reducing the inherent background counting rate. The thermal neutron sensitivity of the WL-23069 is approximately 6.5 counts/neutron/cm².

MECHANICAL		
Maximum Diameter	1-1/32	Inches
Maximum Overall Length	15-9/16	Inches
Approximate Sensitive Length	12	Inches
Net Weight	8	Ounces
Shipping Weight	3	Pounds

MATERIALS	
Body	EC Grade Aluminum
Electrode	0.001 Inch Dia. Tungsten
Connector	Magnesium
Insulation:	
Electrode Supports	Alumina Ceramic
Connector	Polystyrene
Neutron Sensitive Material:	
Content	Boron Trifluoride Enriched to 96% in Boron-10
Pressure	55 Cm of Hg

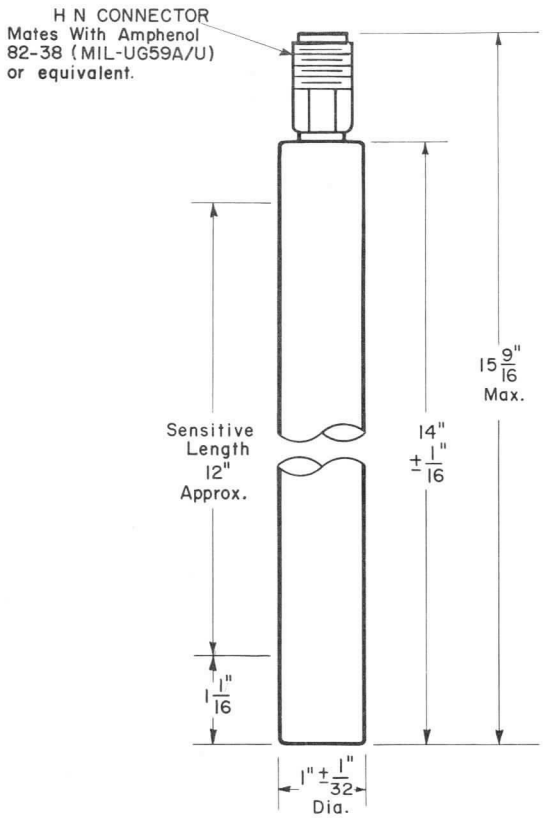

IMPEDANCE		
Resistance (minimum)	10^{11}	Ohms
Capacitance (Approx.)	.5	pF

MAXIMUM RATINGS		
Voltage Between Electrodes	2500	Volts
Temperature	250	Degrees F
External Pressure (Note 3)	180	Pounds/Inch²
Operating:		
Thermal Neutron Flux	7.5×10^4	nv
Non-Operating:		
Thermal Neutron Flux (Note 1)	10^{10}	nv
Gamma Flux (Note 1)	10^5	R/hr

TYPICAL OPERATION (Note 2)		
Operating Voltage	2000	Volts
Thermal Neutron Flux Range:		
With Conventional Circuitry	1.5×10^{-1} to 1.5×10^4	nv
With Special Circuitry (Note 4)	7.5×10^{-2} to 7.5×10^4	nv
Sensitivity	6.5	CPS/nv
Plateau Characteristics:		
Length (minimum)	200	Volts
Overall Slope (maximum)	4	Per-cent
Output Pulse Characteristics:		
Amplitude (Approx. Unloaded)	.60	Millivolts
Inherent Rise Time (Average)	10^{-7}	Seconds
Inherent Background (Note 5) (Approx.)	0.2	Counts/Second

NOTES

1. When in flux levels exceeding the maximum operating level the high voltage should be removed, and the tube shorted through a maximum of 3 megohms.
2. These characteristics will vary depending upon the associated circuitry.
3. The pressurizing atmosphere must be dry and non-corrosive.
4. With low-noise, high resolution circuitry.
5. In radiation free areas, and with low-noise circuitry, values of the order of 4 to 6 counts per minute have been observed. High humidity environments should be avoided since they may impair performance.

PRINTED IN U.S.A. SUPERSEDES WX-31035 PROPORTIONAL COUNTER

The information contained herein is supplied without assuming responsibility for infringement of patents or other rights of third parties which may result from its use. No license is granted by implication or otherwise under any patent or patent rights of Westinghouse Electric Corporation.

WESTINGHOUSE ELECTRIC CORPORATION, ELECTRONIC TUBE DIVISION, ELMIRA, NEW YORK

Westinghouse®

WL-23070

September 15, 1965

DUAL RANGE FISSION CHAMBER TYPE WL-23070

The WL-23070 is an aluminum cased dual range thermal neutron detector of guard ring construction. Ionization pulses are produced in the argon-nitrogen atmosphere by fission fragments resulting from thermal neutrons incident to the sensitive coating. The sensitive coating consists of uranium oxide, enriched to 20% in the U-235 isotope. The detector is extremely rugged and may be operated in any position and at temperatures up to 500 °F.

The WL-23070 may be operated either as a fission counter in a flux range of 7 to 7×10^5 neutrons/cm²/second, or as an ionization chamber in the flux range of 5×10^5 to 5×10^{10} neutrons/cm²/second.

In typical operation as a fission counter, the detector has a thermal neutron sensitivity of approximately 0.14 counts/neutron/cm² with an operating voltage of 300 volts. When connected for service as an ionization chamber, the neutron sensitivity is approximately 2.8×10^{-14} amperes/neutron/cm²/second, and the gamma sensitivity is approximately 4×10^{-11} amperes/R/hour.

MECHANICAL

Maximum Diameter	3-1/16	Inches
Maximum Overall Length	13-13/16	Inches
Approximate Sensitive Length	7	Inches
Net Weight	2-1/2	Pounds
Shipping Weight	12	Pounds

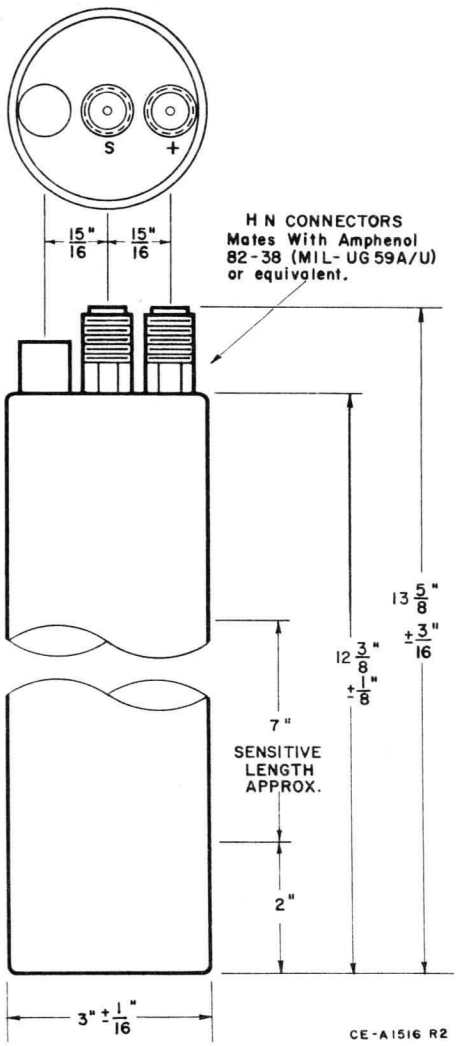

MATERIALS

Outer Case	Aluminum
Electrodes	Aluminum
Insulation	Alumina Ceramic
Neutron Sensitive Material:	
Content	U_3O_8 Enriched 20% in U-235
Thickness	2 mg/cm²
Total Quantity	0.4 Grams
Gas Filling	Argon-Nitrogen Mixture
Gas Pressure	76 Cm of Hg

IMPEDANCE

Resistance at 500 °F	10^9 min.	Ohms
Capacitance:		
Signal Electrode to Case (Approx.)	250	pF
H.V. Electrode to Case (Approx.)	170	pF

MAXIMUM RATINGS

Voltage Between Electrodes	800	Volts
Temperature	500	Degrees F
Thermal Neutron Flux	10^{11}	nv

TYPICAL OPERATION AS A COUNTER

Operating Voltage	300	Volts
Operating Voltage Plateau	200 to 800	Volts
Thermal Neutron Flux Range	7 to 7×10^5	nv
Sensitivity (Note 1)	0.14	CPS/nv
Output Pulse Characteristics:		
Amplitude (Unloaded)	2×10^{-4}	Volts
Inherent Rise Time (Average)	2×10^{-7}	Seconds

TYPICAL OPERATION AS AN ION CHAMBER

Operating Voltage (Note 2)	300 to 800	Volts
Thermal Neutron Flux Range (Note 3)	5×10^5 to 5×10^{10}	nv
Thermal Neutron Sensitivity (Approx.)	2.8×10^{-14}	Amperes/nv
Gamma Sensitivity (Approx.)	4×10^{-11}	A/R/hour

NOTES

1. The thermal neutron sensitivity is 0.14 counts/neutron/cm² when the alpha background counting rate of the naturally radioactive uranium is adjusted to 5 counts/second.
2. The minimum voltage required for saturation is dependent upon the incident neutron flux level.
3. The lower limit of operating range is determined by an inherent alpha background current of approximately 3×10^{-9} amperes.

PRINTED IN U.S.A. SUPERSEDES WX-3871 FISSION CHAMBER

The information contained herein is supplied without assuming responsibility for infringement of patents or other rights of third parties which may result from its use. No license is granted by implication or otherwise under any patent or patent rights of Westinghouse Electric Corporation.

Westinghouse

WL-23071

September 1, 1965

HIGH TEMPERATURE FISSION COUNTER, TYPE WL-23071

The WL-23071 is a neutron detector designed for operation at temperatures up to 850°F. The chamber outer surfaces and electrodes are stainless steel, chosen for its elevated temperature performance. The sensitive coating consists of uranium oxide, enriched to more than 90% in the U-235 isotope. The detector is rugged, and may be operated in any position.

In typical operation as a pulse detector, at 850°F, the WL-23071 has a thermal neutron sensitivity of approximately 0.5 cps/nv with an operating voltage of approximately 300 volts.

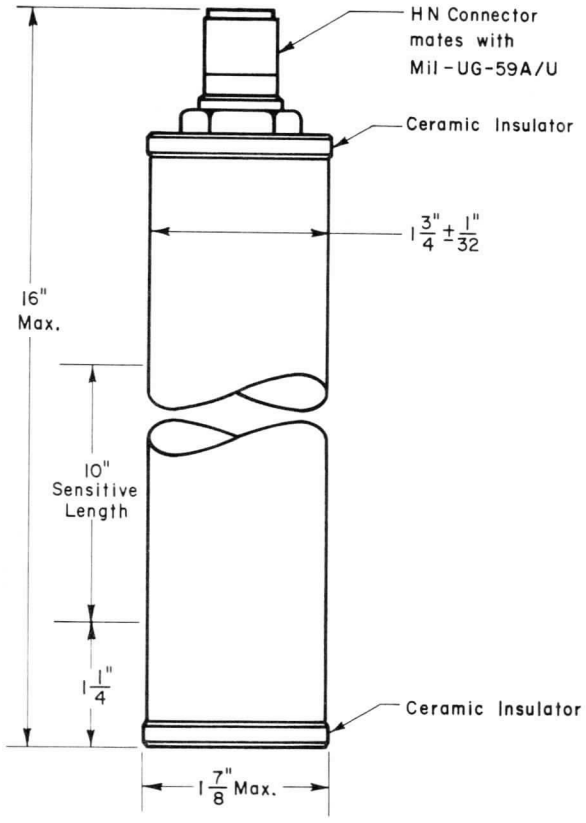

MECHANICAL

Body Diameter (Note 1)	1-3/4	Inches
Maximum Overall Length	16	Inches
Approx. Sensitive Length	10	Inches
Net Weight (Approx.)	2-1/2	Pounds

MATERIALS

Body and Electrodes	Stainless Steel	
Insulators	Alumina	
Neutron Sensitive Coating:		
Content	U_3O_8 Enriched to More Than 90% in U-235	
Thickness	2.0	mg/cm^2
Total Amount of U-235	1.88	Grams
Gas Filling	Argon-Nitrogen	

ELECTRICAL

Output Impedance:		
At 850°F (Min.)	10^7	Ohms
At 68°F (Min.)	10^9	Ohms
Capacity	283	pF

MAXIMUM RATINGS

Voltage Between Electrodes	800 max.	Volts
Temperature	850 max.	°F
Total Integrated Neutron Flux	2×10^{17} max.	nvt

TYPICAL OPERATION AS A FISSION COUNTER AT 850°F

Operating Voltage	300	Volts
Operating Voltage Plateau	200-800	Volts
Neutron Flux Range (Note 2)	2 to 2×10^5	nv
Sensitivity	0.5	cps/nv
Output Pulse Characteristics		
Magnitude	2×10^{-4}	Volts
Inherent Rise Time	2×10^{-7}	Seconds

NOTES

1. This diameter does not include stand-off ceramics used to insulate the detector from the detector well. Max. diameter of stand-off insulators is 1-7/8 inch.
2. With special circuitry this range may be extended.

PRINTED IN U.S.A. SUPERSEDES WX-4036 FISSION COUNTER

The information contained herein is supplied without assuming responsibility for infringement of patents or other rights of third parties which may result from its use. No license is granted by implication or otherwise under any patent or patent rights of Westinghouse Electric Corporation.

Westinghouse

WL-23072

July 15, 1965

DUAL RANGE HIGH TEMPERATURE GUARD RING FISSION CHAMBER WL-23072

The WL-23072 fission chamber is designed to detect thermal neutrons in the range of 4 to 4×10^5 neutrons/cm^2/second when operated as a counter and in the range from 2×10^6 to 2×10^{10} neutrons/cm^2/second when operated as a chamber. The detector is extremely rugged in construction designed to pass MIL-S-901 for shock and MIL-STD-167 (Type 1) for vibration. The WL-23072 is of guard ring construction, a feature which minimizes electrical leakage across the internal insulators, and it may be operated in any position at temperatures up to 700°F.

The WL-23072 is constructed of aluminum, with high purity alumina ceramic insulators throughout, including those used in the type HN coaxial connectors. In typical operation at 700°F the counter has a thermal neutron sensitivity of 0.25 counts/neutron/cm^2 throughout a wide range of applied voltage. In chamber operation the WL-23072 has a thermal neutron sensitivity of about 4×10^{-14} amperes/neutron/cm^2/second, and a gamma sensitivity of about 4×10^{-11} amperes/R/hour.

MECHANICAL

Maximum Diameter	3-1/16	Inches
Maximum Overall Length	13-13/16	Inches
Approx. Sensitive Length	7	Inches
Net Weight	2-1/2	Pounds
Shipping Weight	.10	Pounds

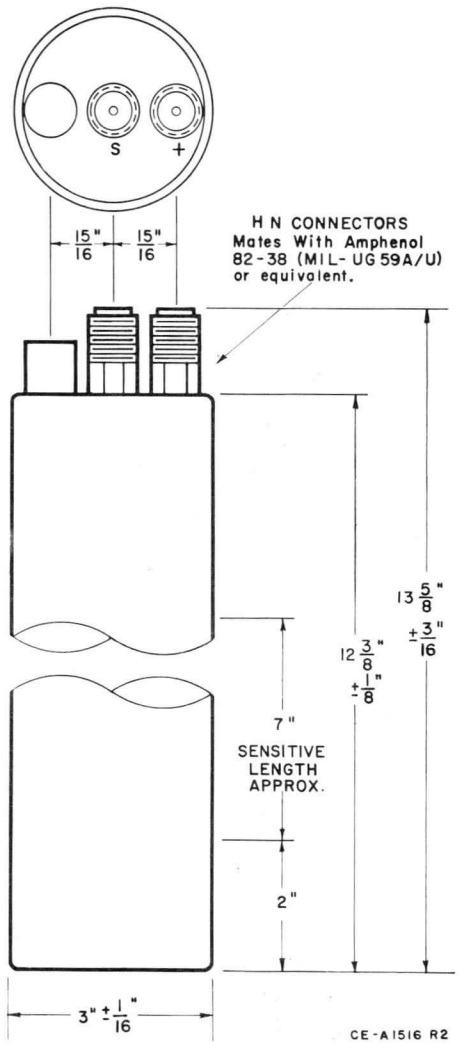

MATERIALS

Element Body	Aluminum
Electrodes	Aluminum
Insulation	Hi-purity Alumina Ceramic
Neutron Sensitive Material:	
Content	U_3O_8 Enriched to more than 90% in U-235
Thickness	2 mg/cm^2
Total Quantity	0.786 Grams
Gas Filling	Argon-Nitrogen Mixture
Gas Pressure	76 Cm of Hg

IMPEDANCE

Resistance at 700°F (minimum)	10^7	Ohms
Capacitance:		
Signal Electrode to Case (Approx.)	200	pF
High Voltage Electrode to Case (Approx.)	150	pF

MAXIMUM RATINGS

Voltage Between Electrodes	1000	Volts
Temperature	700	Degrees F
External Pressure (Note 2)	180	Pounds/Inch^2
Thermal Neutron Flux	10^{11}	nv

TYPICAL OPERATION AS A COUNTER

Operating Voltage	300	Volts
Operating Voltage Plateau	200 to 800	Volts
Thermal Neutron Flux Range	4 to 4×10^5	nv
Sensitivity (Note 1)	0.25	cps/nv
Output Pulse Characteristics:		
Amplitude (Unloaded)	2×10^{-4}	Volts
Inherent Rise Time (Average)	2×10^{-7}	Seconds

TYPICAL OPERATION AS A CHAMBER

Operating Voltage (Maximum)	1000	Volts
Thermal Neutron Flux Range	2×10^6 to 2×10^{10}	nv
Thermal Neutron Sensitivity	4×10^{-14}	Amperes/nv
Gamma Sensitivity	4×10^{-11}	Amperes/R/hr.
Alpha Background Current (Approx.)	5×10^{-9}	Amperes

NOTES

1. The sensitivity is 0.25 counts/neutron/cm^2 when the alpha background counting rate of the naturally radioactive uranium is adjusted to 5 counts/second. By varying the pulse height selector on the associated circuitry other sensitivities are available. See Figure 1.
2. The pressurizing atmosphere must be dry and non-corrosive.

PRINTED IN U.S.A. SUPERSEDES WX-4414 FISSION COUNTER & CHAMBER

The information contained herein is supplied without assuming responsibility for infringement of patents or other rights of third parties which may result from its use. No license is granted by implication or otherwise under any patent or patent rights of Westinghouse Electric Corporation.

September 15, 1965

SHORT RISE TIME FISSION COUNTER TYPE WL-23073

The WL-23073 is a guard-ring fission counter designed for use with fast electronics for the detection of thermal neutrons in the range of 2×10^3 to 2×10^8 nv. To effectively reduce the gamma pulse pile-up, the integral bias curve is flat over a wide range of discriminator settings. The flatness is achieved by the use of a thin fissile coating, coating only the electrode to which voltage is applied and operating the counter with the collector positive with respect to the high voltage electrode.

The guard-ring structure combined with the use of high purity alumina insulation throughout permits operation at temperatures up to 400°C with low leakage and noise levels.

The counter shell and support structures of the WL-23073 are unalloyed titanium and the collector electrode is beryllium to reduce low energy, gamma-produced betas. Flying leads permit direct wiring to a preamplifier to reduce capacitance and minimize interconnection problems. (Note 1) The short rise time of 20 nanoseconds is attained through the use of a P-10 (argon + 10% methane) gas fill.

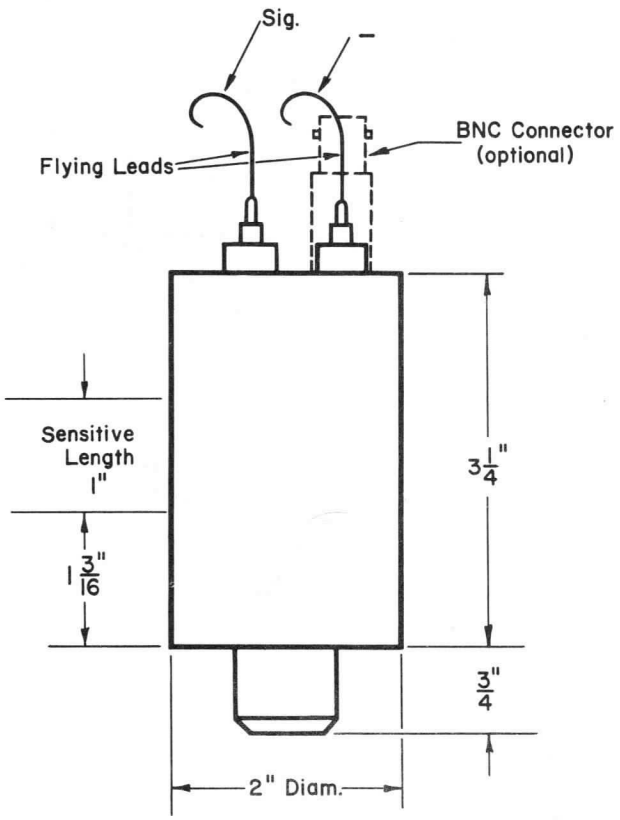

MECHANICAL

Maximum Diameter	2-1/32	Inches
Maximum Length (Excluding Leads)	5	Inches
Approximate Sensitive Length	1	Inch
Net Weight	1	Pound
Shipping Weight	10	Pounds

MATERIALS

Outer Case	Titanium
Electrodes (Note 2)	Beryllium
Insulation	Alumina
Neutron Sensitive Material:	
Content	U_3O_8 Enriched to More than 90% in U-235
Thickness	0.3 mg/cm^2
Gas Filling (Note 3)	P-10 (Argon + 10% Methane)

IMPEDANCE

Resistance (minimum at 20°C):		
Collector-to-Case	10^{10}	Ohms
H.V.-to-Case	10^{10}	Ohms
Capacitance (Approx.): (Note 4)		
Collector-to-Case	40	pF
H.V.-to-Case	50	pF

MAXIMUM RATINGS

Voltage Between Electrodes, D.C.	1000	Volts
Temperature	400	°C
External Pressure (Note 5)	180	PSI
Thermal Neutron Flux:		
Operating	2×10^8	nv
Non-operating	10^{13}	nv

TYPICAL OPERATION

Operating Voltage (Note 6) (d-c)	500	Volts
Plateau	350 – 650	Volts
Thermal Neutron Flux Range	2×10^3 to 2×10^8	nv
Sensitivity	5×10^{-3}	C/nv
Output Pulse Characteristics:		
Amplitude (Unloaded)	1×10^{-3}	Volts
Inherent Rise Time (Average)	20	Nanoseconds
Integral Bias Data	See Figure 1	

NOTES

1. Other detectors are available with standard connectors.
2. The collector electrode is made of beryllium to reduce gamma sensitivity and heating. Other detectors are available with a titanium collector at a reduction in cost but with an increase in gamma response and heating.
3. The WL-23073 uses a fill of argon + 10% methane to achieve a rise time of 20 ns. During extended reactor operation, the characteristics may vary with life due to changes in the gas composition.

   Greater stability would be attained by using an argon + nitrogen fill. Although the rise time would increase to about 55 ns and the operating voltage to achieve this value would be increased. Other detectors are available with argon-nitrogen fill.
4. Capacitance is measured between an electrode and the case, with the remaining electrode grounded to the case.
5. The pressurizing atmosphere must be dry and non-corrosive.
6. The pulse rise time will be a function of voltage and pressure fill for argon + methane fills. For maximum pulse rise time, the applied voltage should be negative and about 70 volts. However, because of the higher pressure fill, columnar recombination occurs at such low voltages and an increase is needed to overcome this effect. The value of voltage required will then be a function of equipment rise time and a balance between a satisfactory plateau and a slight reduction in rise time.

COMPARISON OF INTEGRAL BIAS RESPONSE
NORMALIZED TO ALPHA BACKGROUND

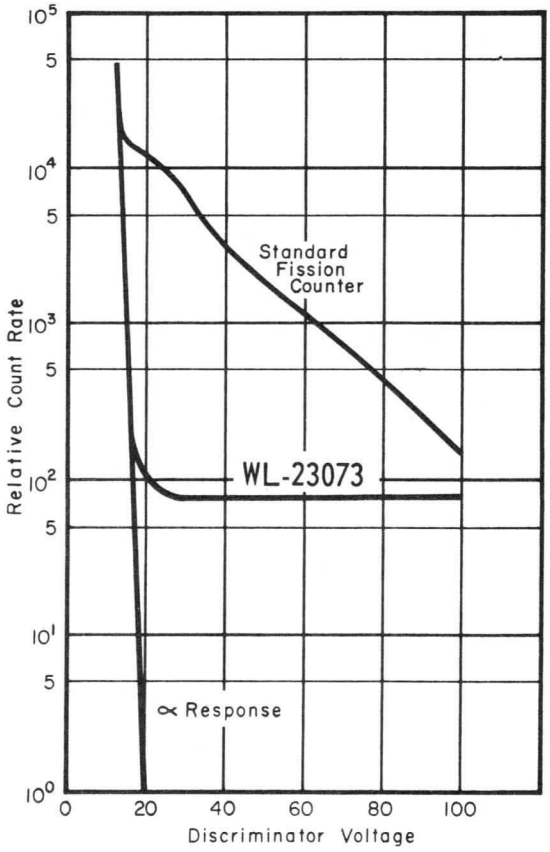

FIGURE 1

The information contained herein is supplied without assuming responsibility for infringement of patents or other rights of third parties which may result from its use. No license is granted by implication or otherwise under any patent or patent rights of Westinghouse Electric Corporation.

August 15, 1965

FISSION COUNTER TYPE WL-23074

The WL-23074 is designed to detect thermal neutrons in the range 1.4 to 1.4×10^5 nv in the presence of high gamma dose rates. The design is a modification of the WL-7657 incorporating guard-ring construction in a rugged assembly. The gas fill is P-10 (argon + 10% methane) which gives a fast rise time. The pulse amplitude is about the same as the WL-7657.

The WL-23074 is constructed of aluminum with high purity alumina ceramics for insulation. The connectors are of the flying lead type to permit direct connection to a preamplifier. (Note 1)

The detector has a thermal neutron sensitivity of about 0.7 c/n-cm^2 over a wide range of applied voltage.

MECHANICAL

Maximum Diameter	3-1/32	Inches
Maximum Length (Excluding Leads)	.14	Inches
Approx. Sensitive Length	7	Inches
Net Weight	2-1/2	Pounds
Shipping Weight	.10	Pounds

MATERIALS

Outer Case	1100 Aluminum
Electrodes	1100 Aluminum
Seals	Titanium
Insulation	Alumina
Neutron Sensitive Material:	
Content	U_3O_8 Enriched to More than 90% in U-235
Thickness	2 mg/cm^2
Total Quantity	1.68 Grams
Gas Filling (Note 4)	P-10 (Argon + 10% Methane)

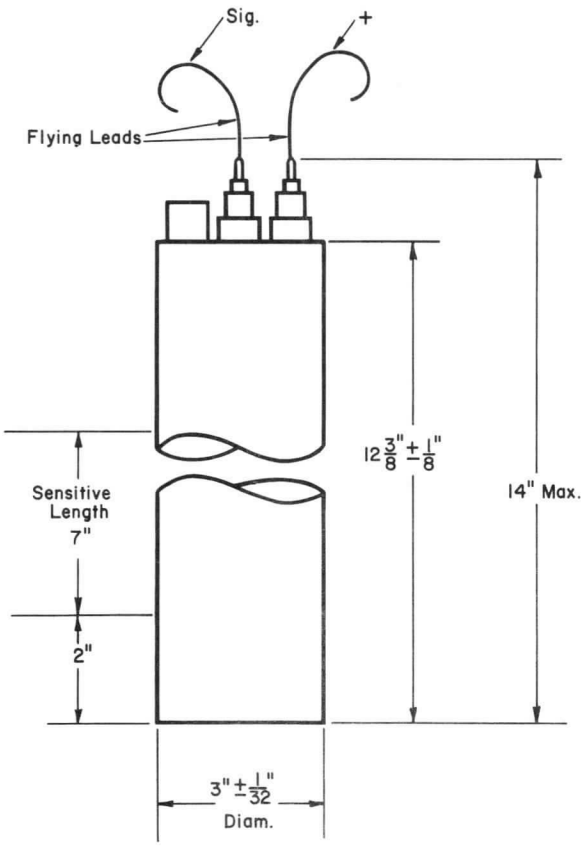

IMPEDANCE

Resistance (minimum):		
500°F	10^9	Ohms
75°F	10^9	Ohms
Capacitance (Approx.) Note 2		
Signal to Case	225	pF
H.V. to Case	160	pF

MAXIMUM RATINGS

Voltage between Electrodes (d-c)	1000	Volts
Temperature	500	°F
External Pressure (Note 3)	180	PSI
Thermal Neutron Flux	10^{11}	nv

TYPICAL OPERATION

Operating Voltage (Note 5) (d-c)	75	Volts
Voltage Plateau	See Note 5	
Thermal Neutron Flux Range	1.4 to 1.4×10^5	nv
Sensitivity (Note 6)	0.7	cps/nv
Output Pulse Characteristics:		
Amplitude (Unloaded)	2×10^{-4}	Volts
Inherent Rise Time (Average) (Note 4)	60	Nanoseconds

NOTES

1. Other detectors are available with standard connectors.
2. Capacitance is measured between an electrode and the case with the remaining electrode grounded to the case.
3. The pressurizing atmosphere must be dry and non-corrosive.
4. The use of argon + 10% methane gives a fast rise time. For extended reactor operation, the characteristics may vary with life due to changes in the gas composition. Greater stability would be attained by using an argon + nitrogen fill although the rise time would increase to about 2×10^{-7} seconds and the operating voltage would change slightly. Other detectors are available with argon + nitrogen fill.
5. The pulse rise time for P-10 gas is a function of applied voltage and pressure fill and will maximize at about 75 volts. At values of less than 75 volts, the rise time function falls off sharply; above 75 volts the function falls off slowly. The exact choice of operating voltage will be dependent on the associated circuitry.
6. The sensitivity is 0.7 cps/nv when the alpha background is adjusted to 5 cps. By varying the pulse height selector, other sensitivities are available. See Figure 1.

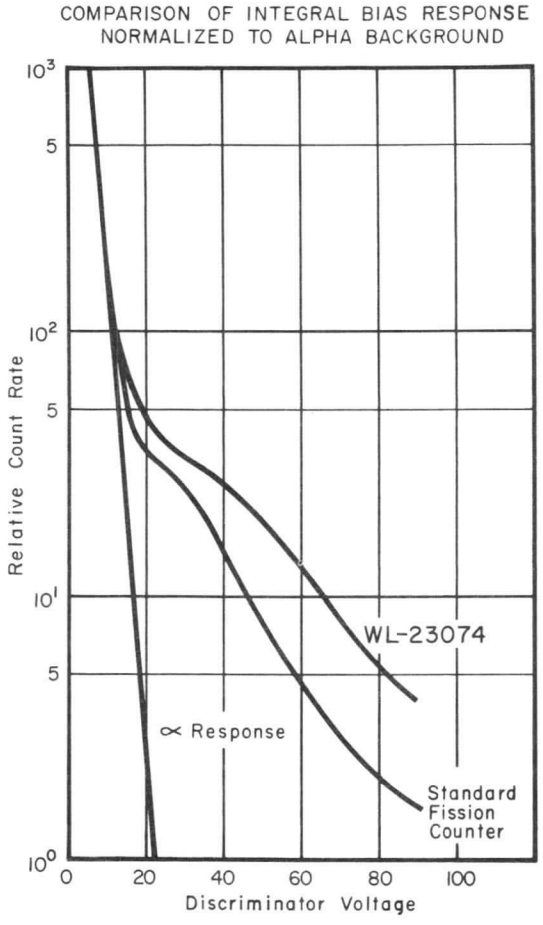

FIGURE 1

The information contained herein is supplied without assuming responsibility for infringement of patents or other rights of third parties which may result from its use. No license is granted by implication or otherwise under any patent or patent rights of Westinghouse Electric Corporation.

October 1, 1965

FISSION COUNTER TYPE WL-23075

The WL-23075 fission counter is designed to detect thermal neutrons in the range of 2.8 to 2.8×10^5 neutrons/cm²/second. The detector is extremely rugged in construction, designed to meet MIL-S-901 for Shock and MIL-STD-167 (Type 1) for Vibration, and may be operated in any position at temperatures up to 150 °C.

The WL-23075 is constructed of aluminum with high-purity alumina-ceramic insulators throughout, including those used in the type HN coaxial connector. The WL-23075 has a thermal neutron sensitivity of approximately 0.3 counts/neutron/cm² throughout a wide range of applied voltage.

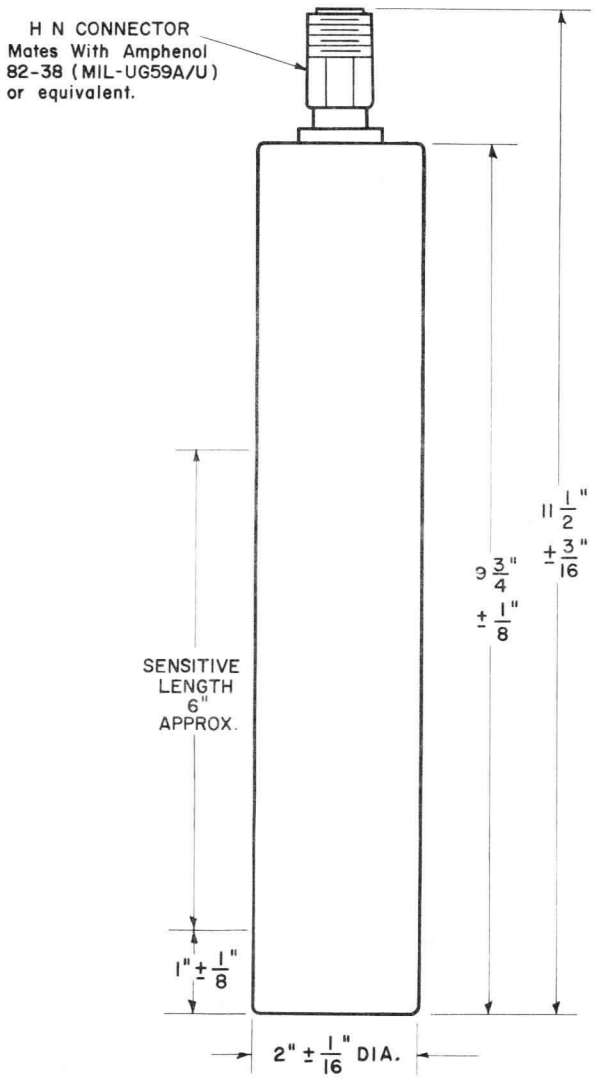

MECHANICAL		
Maximum Diameter	2-1/16	Inches
Maximum Overall Length	11-11/16	Inches
Approximate Sensitive Length	6	Inches
Net Weight	1-3/4	Pounds
Shipping Weight	12	Pounds
MATERIALS		
Outer Case	Aluminum	
Electrodes	Aluminum	
Insulation	Alumina Ceramic	
Neutron Sensitive Material:		
Content	U_3O_8 Enriched to more than 90% in U-235	
Thickness	0.5	mg/cm²
Total Quantity	0.42	Grams
Gas Filling	Argon-Nitrogen Mixture	
Gas Pressure	76	Cm of Hg
IMPEDANCE		
Resistance (minimum)	10^9	Ohms
Capacitance	190	pF
MAXIMUM RATINGS		
Voltage Between Electrodes	1000	Volts
Temperature	150	°C
External Pressure (Note 1)	180	Pounds/Inch²
Thermal Neutron Flux	10^{11}	nv
TYPICAL OPERATION		
Operating Voltage	300	Volts
Operating Voltage Plateau	200 to 800	Volts
Thermal Neutron Flux Range	2.8 to 2.8×10^5	nv
Sensitivity (Note 2)	0.3	CPS/nv
Output Pulse Characteristics:		
Amplitude (Unloaded)	2×10^{-4}	Volts
Inherent Rise Time (Average)	2×10^{-7}	Seconds

NOTES

1. The pressurizing atmosphere must be dry and non-corrosive.
2. The sensitivity is 0.3 counts/neutron/cm² when the alpha background of the naturally radioactive uranium is adjusted to 5 counts/second. By varying the pulse height selector on the associated circuitry other sensitivities are available.

The information contained herein is supplied without assuming responsibility for infringement of patents or other rights of third parties which may result from its use. No license is granted by implication or otherwise under any patent or patent rights of Westinghouse Electric Corporation.

Westinghouse

WL-23076

November 15, 1965

FISSION COUNTER TYPE WL-23076

The WL-23076 fission counter is designed to detect fast (above 1.5 Mev) neutrons in the range of 1×10^3 to 1×10^8 neutrons/cm²/second. The detector is extremely rugged in construction, designed to meet MIL-S-901 for Shock and MIL-STD-167 (Type 1) for Vibration, and may be operated in any position at temperatures up to 150 °C.

The WL-23076 is constructed of aluminum with high-purity alumina-ceramic insulators throughout, including those used in the type HN coaxial connector. The WL-23076 has a fast neutron sensitivity of approximately 1×10^{-3} neutrons/cm²/second throughout a wide range of applied voltage.

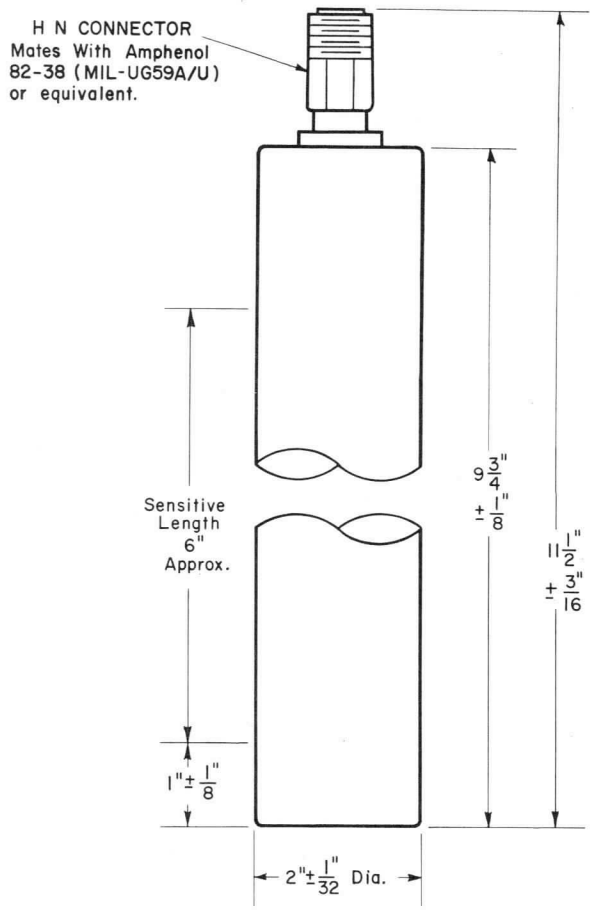

MECHANICAL

Maximum Diameter	2-1/32	Inches
Maximum Overall Length	11-11/16	Inches
Approximate Sensitive Length	6	Inches
Net Weight	1-3/4	Pounds
Shipping Weight	12	Pounds

MATERIALS

Outer Case	Aluminum
Electrodes	Aluminum
Insulation	Alumina Ceramic
Neutron Sensitive Material:	
Content	U_3O_8 Depleted to Less than 200 ppm of U-235
Thickness	2 mg/cm²
Gas Filling	Argon-Nitrogen Mixture
Gas Pressure	76 Cm of Hg

IMPEDANCE

Resistance (minimum)	10^9	Ohms
Capacitance	190	pF

MAXIMUM RATINGS

Voltage Between Electrodes	1000	Volts
Temperature	150	Degrees C
External Pressure (Note 1)	180	Pounds/Inch²
Neutron Flux	1.0×10^{11}	nv
Gamma Flux	1.0×10^6	R/Hr

TYPICAL OPERATION (Note 1)

Operating Voltage	300	Volts
Operating Voltage Plateau	200 to 800	Volts
Fast Neutron Flux Range	1.0×10^3 to 1.0×10^8	nv
Fast Neutron Sensitivity (Note 2)	1.0×10^{-3}	CPS/nv
Thermal Neutron Sensitivity	$< 1.4 \times 10^{-4}$	CPS/nv
Output Pulse Characteristics:		
Amplitude (Unloaded)	2×10^{-4}	Volts
Inherent Rise Time (Average)	2×10^{-7}	Seconds

NOTES

1. The pressurizing atmosphere must be dry and non-corrosive.
2. The sensitivity is 1.0×10^{-3} counts/neutron/cm² when the alpha background counting rate of the naturally radioactive uranium is adjusted to 5 counts/second. By varying the pulse height selector on the associated circuitry other sensitivities are available.

The information contained herein is supplied without assuming responsibility for infringement of patents or other rights of third parties which may result from its use. No license is granted by implication or otherwise under any patent or patent rights of Westinghouse Electric Corporation.

WESTINGHOUSE ELECTRIC CORPORATION, ELECTRONIC TUBE DIVISION, ELMIRA, NEW YORK

Westinghouse

WL-23077

December 1, 1965

DUAL RANGE FISSION CHAMBER TYPE WL-23077

The WL-23077, a fission chamber with integral cable and housing, is designed to detect thermal neutrons in the range of 1.4 to 1.4×10^5 neutrons/cm²/second when operated as a counter and in the range of 5×10^5 to 1.4×10^{10} neutrons/cm²/second when operated as a chamber. The detector is extremely rugged in construction, designed to meet MIL-S-901 for Shock and MIL-STD-167 (Type 1) for Vibration and may be operated in any position at temperatures up to 200°C.

The WL-23077 consists of a fission chamber located within a vacuum tight housing constructed of 304 stainless steel. The unit is designed for use in high humidity type environments and includes an integral triaxial cable with a 304 stainless steel sheath. The housing is electrically insulated from the chamber, thus minimizing ground loop pick-up problems. The chamber is constructed of aluminum with high purity alumina insulation. In typical operation as a fission counter, the WL-23077 has a thermal neutron sensitivity of approximately 0.7 counts/neutron/cm² throughout a wide range of applied voltage. When connected for service as an ionization chamber, the thermal neutron sensitivity is approximately 1.4×10^{-13} amperes/neutron/cm²/second with a gamma sensitivity of approximately 4.2×10^{-11} amperes/R/hour.

MECHANICAL

Maximum Diameter	3-1/32	Inches
Maximum Over-all Length (Excluding Cable)	12-9/16	Inches
Cable Length (Note 1)	.22	Feet
Cable Diameter	3/8	Inch
Approximate Sensitive Length	6	Inches
Net Weight (Approx.)	20	Pounds
Shipping Weight (Approx.)	50	Pounds

MATERIALS

Chamber Housing	304 Stainless Steel
Cable Sheath	304 Stainless Steel
Chamber Case	Aluminum
Electrodes	Aluminum
Insulation	Alumina Ceramic
Neutron Sensitive Material:	
Content	U_3O_8 Enriched to more than 90% in U-235
Thickness	2 mg/cm²
Total Quantity	1.68 Grams
Gas Filling	Argon-Nitrogen Mixture
Gas Pressure	76 Cm of Hg

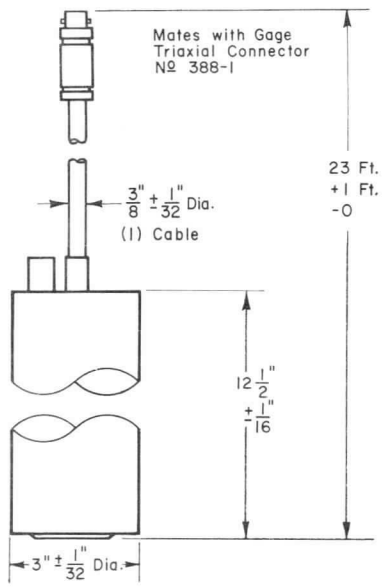

IMPEDANCE

Resistance (minimum):		
Center Conductor to Inner Sheath:		
At 20°C and 500 Volts	10^{10}	Ohms
At 200°C and 500 Volts	10^8	Ohms
Inner Sheath to Outer Sheath:		
At 20°C and 10 Volts	10^9	Ohms
At 200°C and 10 Volts	10^6	Ohms
Capacitance (Approx.):		
Chamber Plus Cable	1000	pF

MAXIMUM RATINGS

Voltage Between Electrodes	1000	Volts
Temperature	200	°C
Thermal Neutron Flux	10^{11}	nv

TYPICAL OPERATION AS A COUNTER (Note 2)

Operating Voltage	300	Volts
Operating Voltage Plateau	200 to 800	Volts
Thermal Neutron Flux Range	1.4 to 1.4×10^5	nv
Sensitivity (Note 2)	0.7	CPS/nv
Output Pulse Characteristics:		
Amplitude (Unloaded)	2×10^{-4}	Volts
Inherent Rise Time (Average)	2×10^{-7}	Seconds

TYPICAL OPERATION AS A CHAMBER

Operating Voltage (Note 3)	300 to 1000	Volts
Thermal Neutron Flux Range (Note 4)	5×10^5 to 1.4×10^{10}	nv
Thermal Neutron Sensitivity	1.4×10^{-13}	Amperes/nv
Gamma Sensitivity	4.2×10^{-11}	Amperes/R/Hr

NOTES

1. This device is available with other sensitivities and cable lengths. Contact Westinghouse Electronic Tube Division, Elmira, New York, or your nearest EC & SP Sales Office.
2. The sensitivity is 0.7 counts/neutron/cm² when the alpha background counting rate of the naturally radioactive uranium is adjusted to 5 counts/second. By varying the pulse height selector on the associated circuitry, other sensitivities are available.
3. The minimum voltage required for saturation is dependent upon the incident flux level.
4. The lower limit of operating range is determined by an inherent alpha background current of approximately 1.6×10^{-8} amperes.

PRINTED IN U.S.A. SUPERSEDES WX-30303 FISSION COUNTER

The information contained herein is supplied without assuming responsibility for infringement of patents or other rights of third parties which may result from its use. No license is granted by implication or otherwise under any patent or patent rights of Westinghouse Electric Corporation.

October 15, 1965

UNCOMPENSATED IONIZATION CHAMBER TYPE WL-23078 AND WL-23078A

The WL-23078 and WL-23078A are compact guard-ring ionization chambers designed to detect thermal neutrons in the range from 5×10^3 to 1×10^{10} neutrons/cm²/second. Guard-ring construction and the use of high-purity alumina ceramics minimize leakage currents usually detrimental to low current operation. The WL-23078 is provided with integral 12-foot coaxial cables (Amphenol #21-541) for the HV and Signal electrodes. The WL-23078A has 90 foot cables. They will operate in any position and at temperatures up to 175°F. With a neutron sensitivity of 6.2×10^{-15} amperes/neutron/cm²/second and a gamma sensitivity of 3×10^{-12} amperes/roentgen/hour.

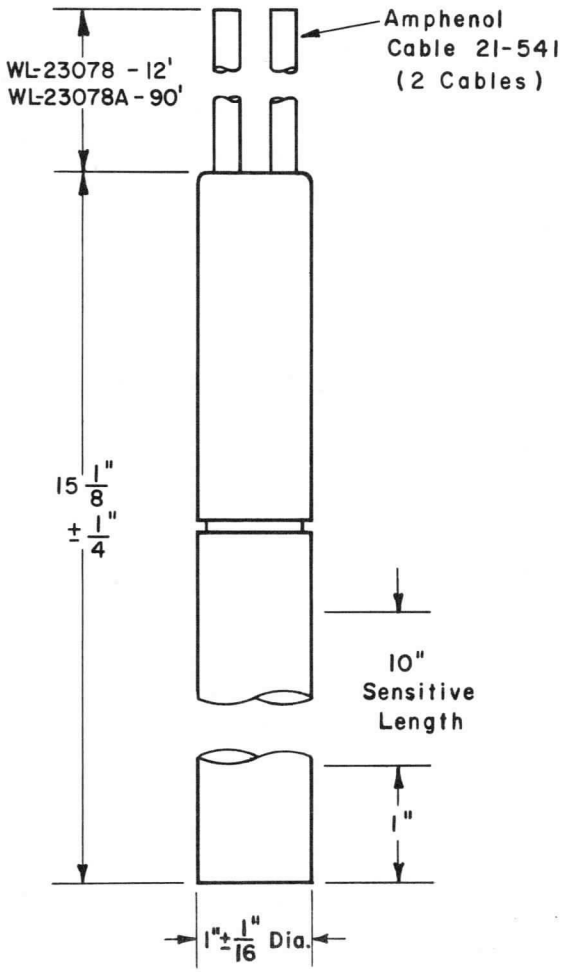

MECHANICAL

Maximum Diameter	1-1/16	Inches
Length:		
Body (Max.)	15-3/8	Inches
Cables:		
WL-23078	12	Feet
WL-23078A	90	Feet
Sensitive	10	Inches
Weight:		
Net (Approx.)	2-1/2	Pounds
Shipping (Approx.)	10	Pounds

MATERIALS

Outer Case	Aluminum
Electrodes	Aluminum
Insulating	Alumina Ceramic
Neutron Sensitive	Boron, Highly Enriched in Boron-10
Gas Filling	Nitrogen

IMPEDANCE

Resistance:		
Signal-to-Case	10^{12}	Ohms
HV-to-Case	10^{12}	Ohms
Capacitance:		
Signal-to-Case:		
Detector Body Only	80	pF
WL-23078	320	pF
WL-23078A	1880	pF
HV-to-Case:		
Detector Body Only	140	pF
WL-23078	380	pF
WL-23078A	1940	pF

MAXIMUM RATINGS

HV-to-Case Voltage	1500 max.	Volts
Signal-to-Case Voltage	1000 max.	Volts
Temperature	175 max.	°F
External Pressure (Note 3)	180 max.	lb/in²
Thermal Neutron Flux	10^{11} max.	nv

TYPICAL OPERATION

Operating Voltage (Note 4)	200 to 1000	Volts
Thermal Neutron Flux Range	5×10^3 to 1×10^{10}	nv
Thermal Neutron Sensitivity (Approx.)	6.2×10^{-15}	A/nv
Gamma Sensitivity (Approx.)	3×10^{-12}	A/R/hr

NOTES

1. With HV electrode connected to case.
2. With Signal electrode connected to case.
3. The pressurizing atmosphere must be dry and non-corrosive.
4. Saturation voltage varies with neutron flux level.

WESTINGHOUSE ELECTRIC CORPORATION, ELECTRONIC TUBE DIVISION, ELMIRA, NEW YORK

TYPICAL CONNECTION DIAGRAM

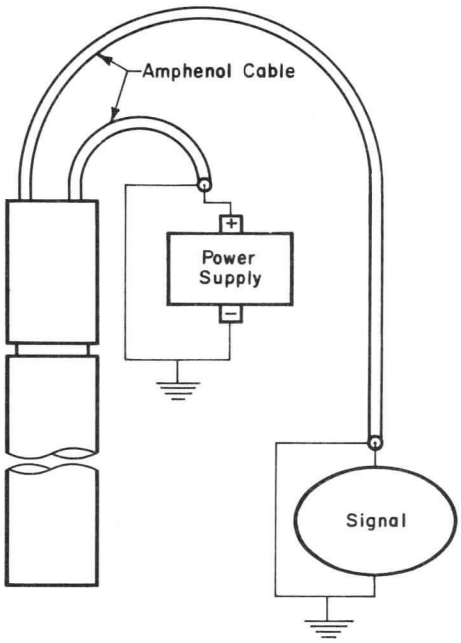

CE-A2290

The information contained herein is supplied without assuming responsibility for infringement of patents or other rights of third parties which may result from its use. No license is granted by implication or otherwise under any patent or patent rights of Westinghouse Electric Corporation.

Westinghouse®

WL-23079

October 1, 1965

WL-23079 UNCOMPENSATED IONIZATION CHAMBER

The WL-23079 is a long ionization chamber designed to detect thermal neutrons in the range from 4.0 to 2.5×10^{10} neutrons/cm²/second at a maximum temperature of 175 degrees F. The use of stabilized polystyrene and guard ring construction assures noise free operation and minimizes spurious signal current due to electrical leakage.

The length of the WL-23079 allows it to integrate the flux profile of a reactor core. This provides a more accurate indication of the flux level by reducing the effect of the shifts in the flux profile which occur during reactor operation.

The use of materials of low activation cross-section reduces the effect of artificial radioactivity. The case is 1100 aluminum; the electrodes are 3% aluminum, 97% magnesium alloy, and the insulation is cross-linked polystyrene.

The thermal neutron sensitivity of the WL-23079 is approximately 3.0×10^{-13} amperes/neutron/cm²/second. The gamma sensitivity is approximately 1.8×10^{-10} amperes/R/hour.

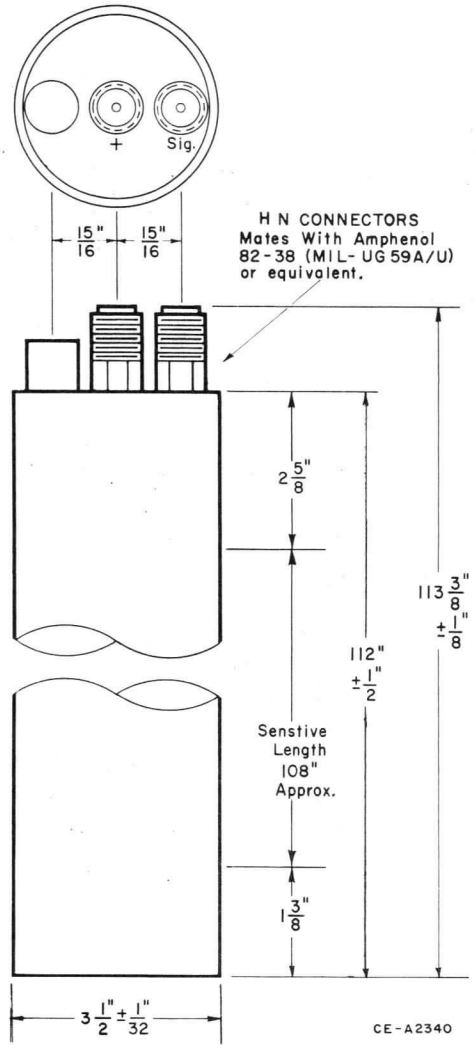

MECHANICAL

Maximum Diameter	3-17/32	Inches
Maximum Overall Length	112-1/2	Inches
Approximate Sensitive Length	108	Inches
Net Weight	41	Pounds
Shipping Weight	55	Pounds

MATERIALS

Outer Case	1100 Aluminum
Electrodes	3% Aluminum, 97% Magnesium Alloy
Insulation	Stabilized Polystyrene
Neutron Sensitive Material	Boron Enriched in B-10
Thickness	1 mg/cm²
Gas Filling	Nitrogen

IMPEDANCE

Resistance: (Note 1)		
Signal Electrode to Case (minimum)	10^{13}	Ohms
H.V. Electrode to Case (minimum)	10^{12}	Ohms
Capacity: (Note 2)		
Signal Electrode to Case	1850	pF
H.V. Electrode to Case	2170	pF

MAXIMUM RATINGS

Voltage Between Electrodes	1500 max.	Volts
Temperature	175 max.	°F
External Pressure (Note 3)	180 max.	Pounds/inch²
Thermal Neutron Flux	10^{11} max.	nv

TYPICAL OPERATION See Figure 1

Operating Voltage (Note 4)	300 to 1100	Volts
Saturation Characteristics		Figure 2
Thermal Neutron Flux Range	4.0 to 2.5×10^{10}	nv
Thermal Neutron Sensitivity (Approx.)	3×10^{-13}	Amperes/nv
Gamma Sensitivity (Approx.)	1.8×10^{-10}	Amperes/R/hr

NOTES

1. The detector may not be immersed directly in water and high humidity environments should be avoided as they will impair performance.
2. Capacitance is measured between an electrode and case with the other electrodes grounded.
3. The pressurizing atmosphere must be dry and non-corrosive.
4. The voltage necessary to produce saturation varies with the neutron flux level. Either polarity may be used. See Figure 2.

TYPICAL CONNECTION DIAGRAM

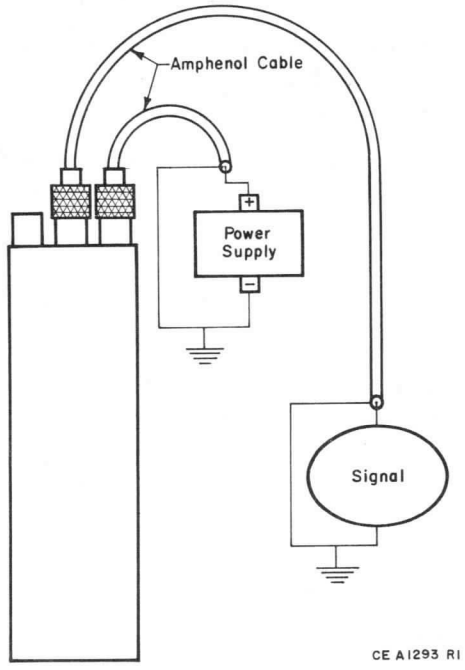

FIGURE 1

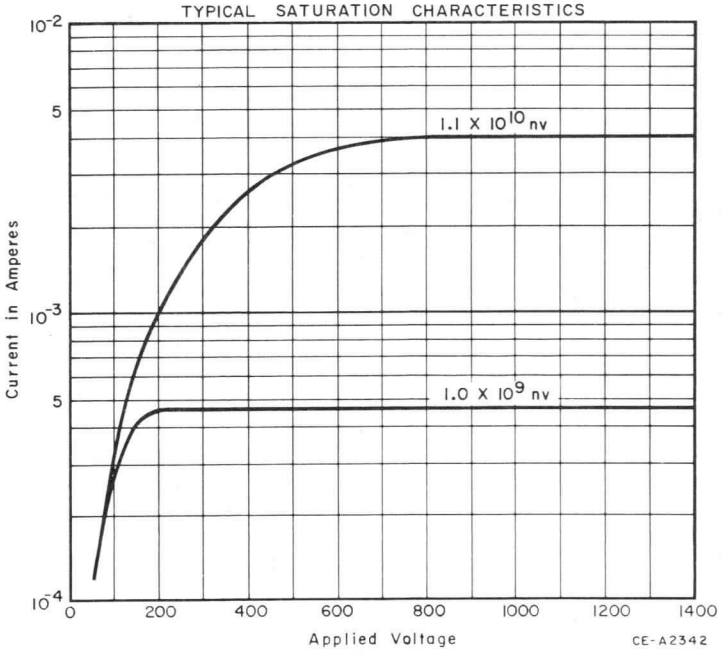

FIGURE 2

The information contained herein is supplied without assuming responsibility for infringement of patents or other rights of third parties which may result from its use. No license is granted by implication or otherwise under any patent or patent rights of Westinghouse Electric Corporation.

Westinghouse®

WL-23082
WL-23082A

October 15, 1965

GAMMA IONIZATION CHAMBER TYPES WL-23082 AND WL-23082A

The WL-23082 and WL-23082A are guard-ring ionization chambers designed to detect X-ray and gamma radiation in the range from 2×10^{1} to 4×10^{5} roentgens/hour. Guard-ring construction and use of high-purity alumina ceramics minimize leakage currents usually detrimental to low current operation. The WL-23082 is provided with integral 12-foot lengths of coaxial cable (Amphenol #21-541) for the HV and Signal electrodes. The cables for the WL-23082A are 90 feet long. They will operate in any position and at temperatures up to 175°F. Their gamma sensitivity is approximately 3×10^{-12} amperes/roentgen/hour.

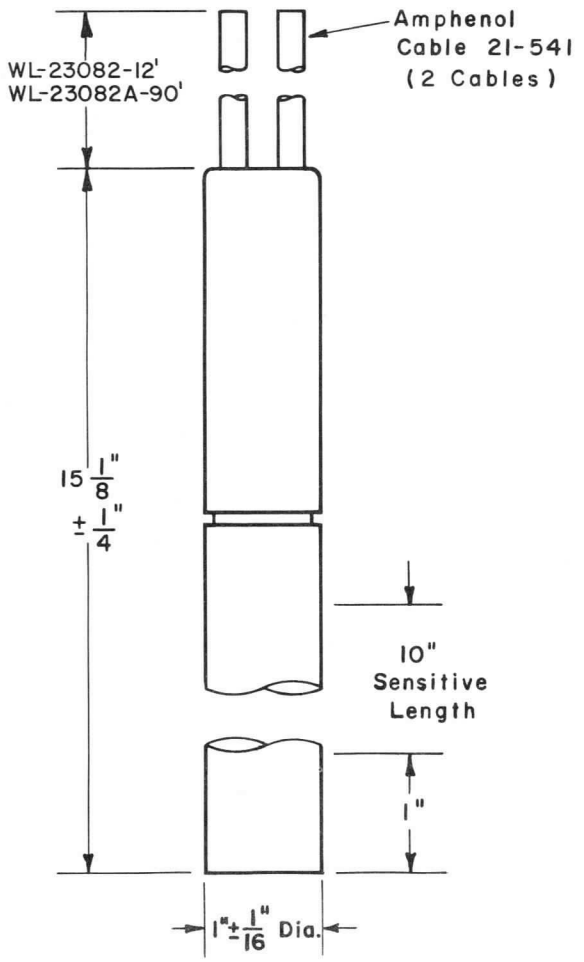

MECHANICAL

Maximum Diameter	1-1/16	Inches
Length:		
Body (Max.)	15-3/8	Inches
Cables:		
WL-23082	12	Feet
WL-23082A	90	Feet
Sensitive (Approx.)	.10	Inches
Weight:		
Net (Approx.)	2-1/2	Pounds
Shipping (Approx.)	.10	Pounds

MATERIALS

Outer Case	Aluminum
Electrodes	Aluminum
Insulation	Alumina Ceramic
Gas Filling	Nitrogen

IMPEDANCE

Resistance:		
Signal-to-Case (Min.)	10^{12}	Ohms
HV-to-Case (Min.)	10^{12}	Ohms
Capacitance:		
Signal-to-Case: (Note 1)		
Detector Body Only	80	pF
WL-23082	320	pF
WL-23082A	1880	pF
HV-to-Case: (Note 2)		
Detector Body Only	140	pF
WL-23082	380	pF
WL-23082A	1940	pF

MAXIMUM RATINGS

HV-to-Case Voltage	1500 max.	Volts
Signal-to-Case Voltage	1000 max.	Volts
Temperature	175 max.	°F
Ecternal Pressure (Note 3)	180 max.	lbs./in^2

TYPICAL OPERATION

Operating Voltage (Note 4)	200 to 1000	Volts
Gamma Sensitivity (Approx.)	3×10^{-12}	A/R/hr

NOTES

1. With HV electrode connected to case.
2. With Signal electrode connected to case.
3. The pressurizing atmosphere must be dry and non-corrosive.
4. Saturation voltage varies with intensity level.

WESTINGHOUSE ELECTRIC CORPORATION, ELECTRONIC TUBE DIVISION, ELMIRA, NEW YORK

TYPICAL CONNECTION DIAGRAM

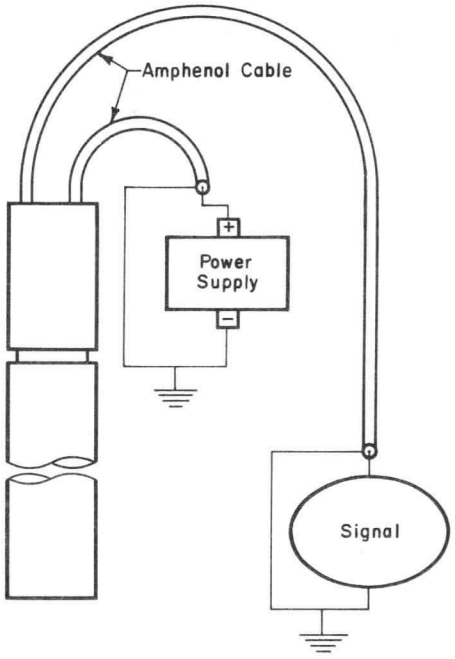

CE-A2290

The information contained herein is supplied without assuming responsibility for infringement of patents or other rights of third parties which may result from its use. No license is granted by implication or otherwise under any patent or patent rights of Westinghouse Electric Corporation.

Westinghouse®

WL-23084

October 1, 1965

COMPENSATED IONIZATION CHAMBER TYPE WL-23084

The WL-23084 compensated ionization chamber is designed to detect thermal neutrons in the range from 2.5×10^2 to 2.5×10^{10} neutrons/cm²/second, in the presence of very high gamma radiation fields. The detector is rugged in construction, and may be operated in any position at temperatures up to 200 °C.

The WL-23084 incorporates both guard-ring construction to minimize insulator leakage, and continuously variable, electrical compensation. The neutron sensitivity of the chamber is approximately 4×10^{-14} amperes/neutron/cm²/second. Gamma sensitivity is less than 3×10^{-11} amperes/R/hr when operated uncompensated, but it is reduced to approximately 3×10^{-13} amperes/R/hr in compensated operation, thus extending the usual operating range two decades.

The WL-23084 is constructed of high purity materials to reduce the effect of induced radioactivity. The case material is 1100 aluminum and the electrode material is a 3% aluminum, 97% magnesium alloy. The insulation is high purity alumina.

The WL-23084 is equivalent to the WL-6377 in performance characteristics, differing primarily in outline dimensions and operating temperature.

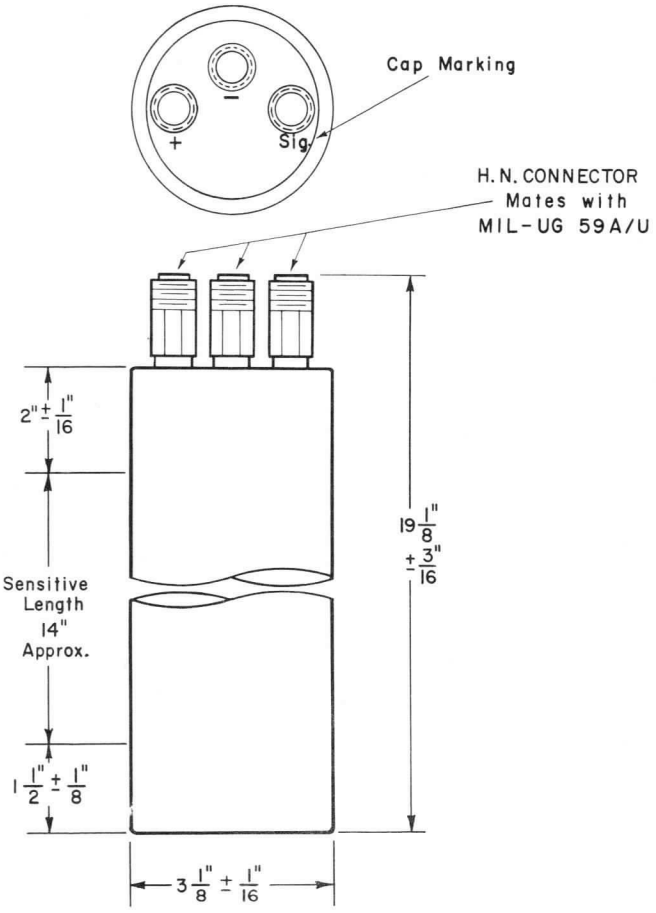

MECHANICAL

Maximum Diameter	3-3/16	Inches
Maximum Overall Length	19-5/16	Inches
Approximate Sensitive Length	14	Inches
Net Weight	5-3/4	Pounds
Shipping Weight	19	Pounds

MATERIALS

Outer Case	1100 Aluminum
Electrodes	3% Al, 97% Mg Alloy
Insulation	Alumina
Neutron Sensitive Material:	
Content	Boron Enriched in B-10
Thickness	1 mg/cm²
Gas Filling	Nitrogen

IMPEDANCE

Resistance: (Note 1)		
Signal Electrode to Case (minimum)	10^{13}	Ohms
H.V. Electrode to Case (minimum)	10^{12}	Ohms
Compensating Electrode to Case (minimum)	10^{12}	Ohms
Capacitance: (Note 2)		
Signal Electrode to Case (Approx.)	274	pF
H.V. Electrode to Case (Approx.)	320	pF
Compensating Electrode to Case (Approx.)	129	pF

MAXIMUM RATINGS

Voltage Between Electrodes (dc)	1500	max.	Volts
Temperature	200	max.	Degrees C
External Pressure (Note 3)	180	max.	Pounds/Inch²
Thermal Neutron Flux	5×10^{11}	max.	nv
Neutron Exposure (Note 4)	10^{19}	max.	nvt

TYPICAL OPERATION

Typical Connection		See Figure 1
Operating Voltage	300 to 800	Volts
Compensating Voltage (See Figure 3)	−10 to −80	Volts
Saturation Characteristics		See Figure 2
Thermal Neutron Flux Range	2.5×10^{2} to 2.5×10^{10}	nv
Thermal Neutron Sensitivity	4×10^{-14}	Amperes/nv
Gamma Sensitivity:		
Total Compensation		zero
Uncompensated	3×10^{-11}	Amperes/R/hour

NOTES

1. The detector may not be immersed directly in water, and high humidity environments should be avoided as they will impair performance.
2. Capacitance is measured between an electrode and case, with all other electrodes grounded.
3. The pressurizing atmosphere must be dry and non-corrosive.
4. This exposure limit is based on a 10% reduction in sensitivity.

TYPICAL CONNECTION DIAGRAM

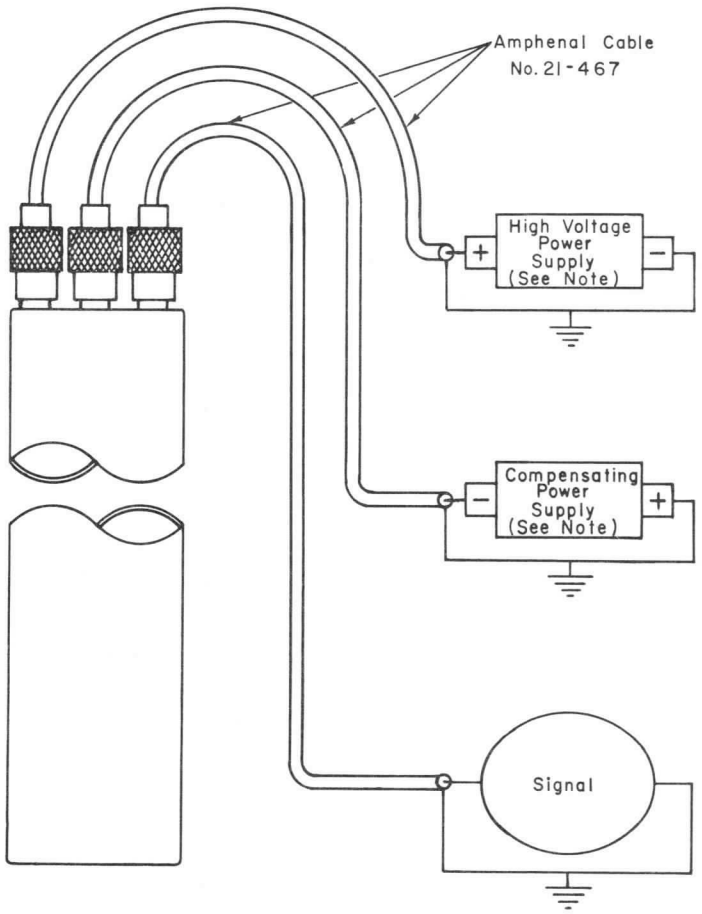

Note: Permissible power supply regulation and ripple will depend upon the particular application. See Section entitled "Ionization Chamber Operation."

CE-A1324 R1

FIGURE 1

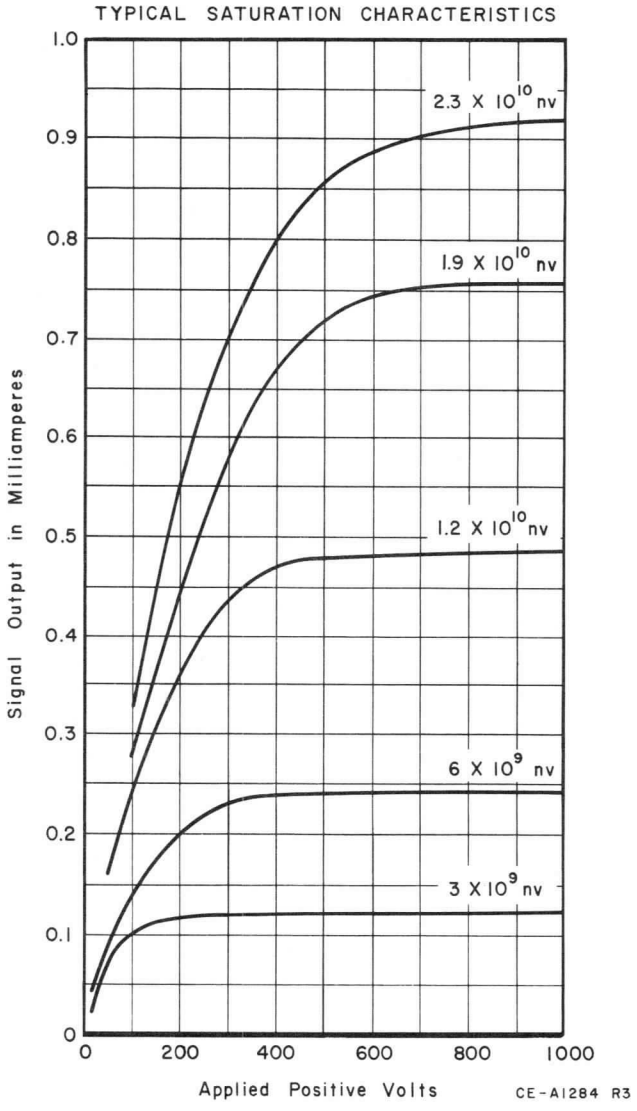
TYPICAL SATURATION CHARACTERISTICS
Signal Output in Milliamperes
1.0
0.9
0.8
0.7
0.6
0.5
0.4
0.3
0.2
0.1
0
2.3 X 10^10 nv
1.9 X 10^10 nv
1.2 X 10^10 nv
6 X 10^9 nv
3 X 10^9 nv
0
200
400
600
800
1000
Applied Positive Volts
CE-A1284 R3

FIGURE 2

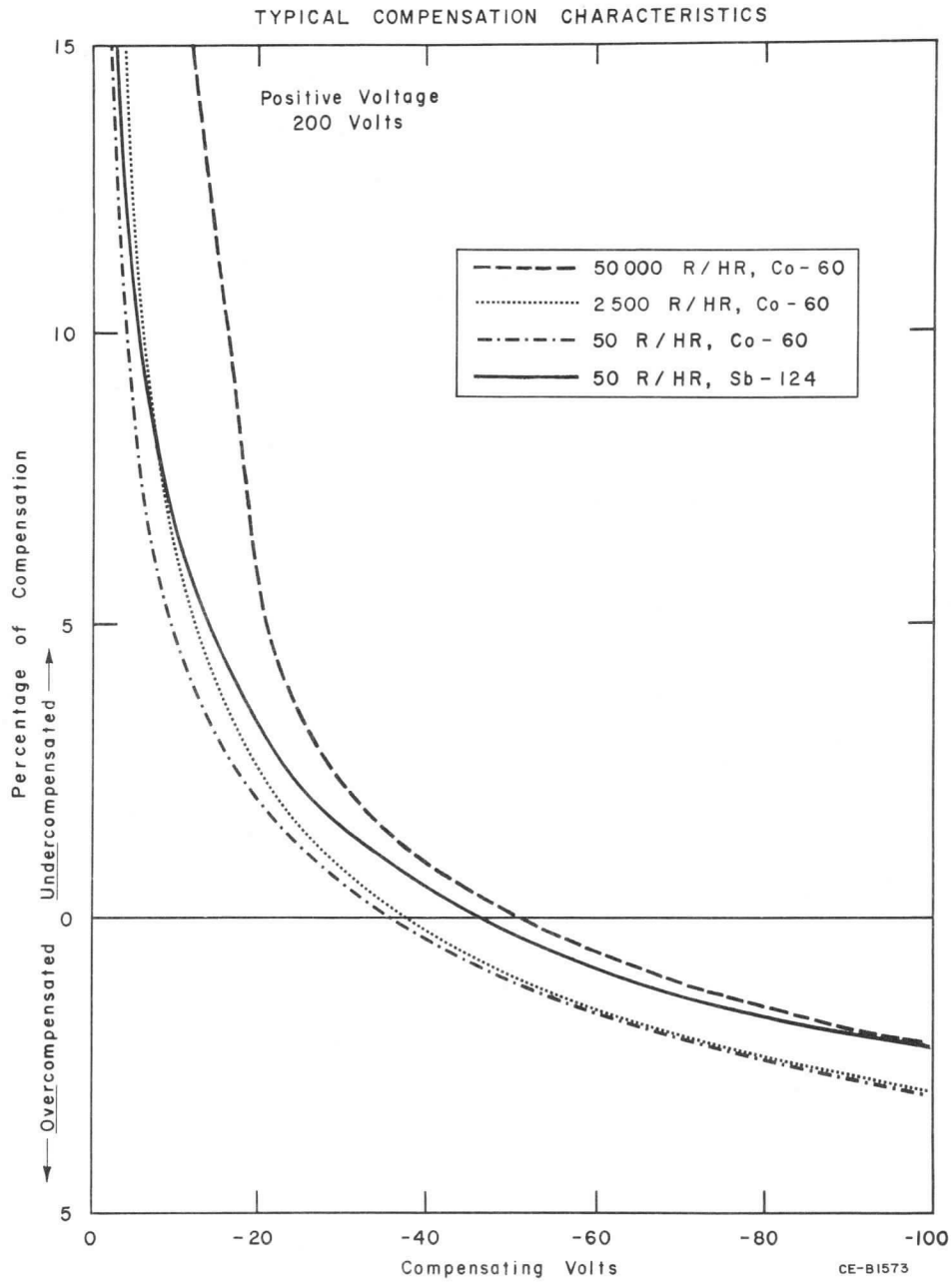

FIGURE 3

The information contained herein is supplied without assuming responsibility for infringement of patents or other rights of third parties which may result from its use. No license is granted by implication or otherwise under any patent or patent rights of Westinghouse Electric Corporation.

Westinghouse®

WL-23085

October 1, 1965

COMPENSATED IONIZATION CHAMBER TYPE WL-23085

The WL-23085 is an electrically compensated ion chamber designed for operation with a fixed, applied compensating voltage. It has a thermal neutron flux range of 1×10^4 to 1.5×10^{12} neutrons/cm²/second.

The chamber is of guard-ring construction utilizing high-purity alumina ceramic insulators throughout. The outer shell and miscellaneous support structures are titanium. The electrodes and electrode support structures are beryllium to reduce low energy photon response and internal gamma heating.

The gas fill is nitrogen to maximize the plateau length. The WL-23085 may be operated at temperatures up to 350°C.

The thermal neutron sensitivity is 1×10^{-15} amperes/neutron/cm²/second. The uncompensated gamma sensitivity is about 1.5×10^{-13} amperes/R/hour.

MECHANICAL

Diameter	3	Inches
Maximum Overall Length	7-3/8	Inches
Approximate Sensitive Length	2-5/16	Inches
Collector Area	75	cm^2
Net Weight	3	Pounds
Shipping Weight	12	Pounds

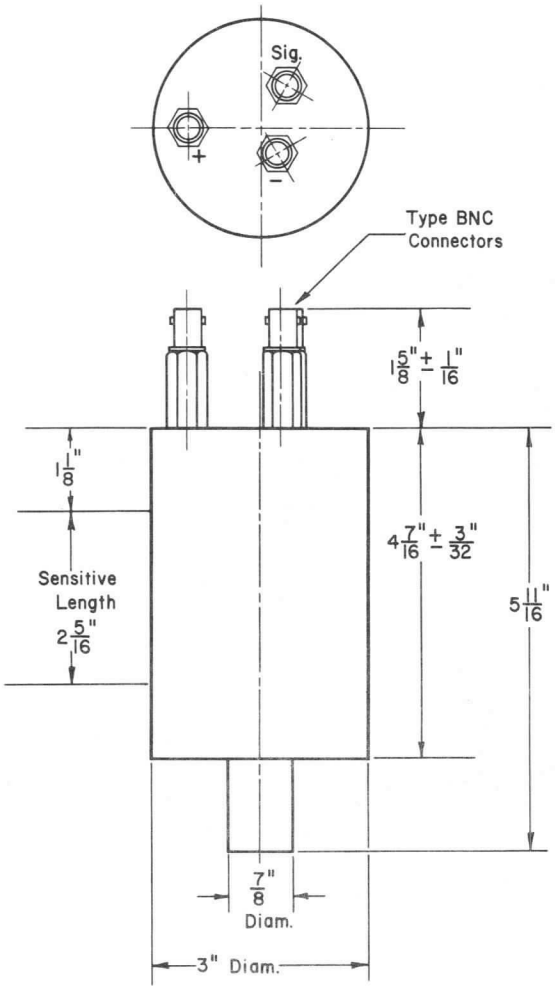

MATERIALS

Outer Case	Titanium
Electrodes (Note 1)	Beryllium
Insulation	Alumina
Neutron Sensitive Material:	
Content	Boron Enriched in B-10
Thickness	0.5 mg/cm²
Gas Filling (Note 2)	Nitrogen
Fill Pressure	19.5 cm Hg

IMPEDANCE

Resistance (minimum) at 20°C:		
Signal-to-Case	10^{13}	Ohms
HV-to-Case	10^{12}	Ohms
Compensating Electrode to Case	10^{12}	Ohms
Capacitance (Approx.): (Note 3)		
Signal-to-Case	155	pF
HV-to-Case	135	pF
Compensating Electrode to Case	80	pF

MAXIMUM RATINGS

Voltage Between Electrodes, d-c	500 max.	Volts
Temperature	350 max.	°C
External Pressure (Note 4)	180 max.	PSI
Thermal Neutron Flux	10^{13} max.	nv

TYPICAL OPERATION

Operating Voltage (Note 5)	See Figure 1	
Compensating Voltage	See Figure 2	
Thermal Neutron Flux Range	1×10^4 to 1.5×10^{12}	nv
Thermal Neutron Sensitivity	1×10^{-15}	A/nv
Gamma Sensitivity:		
Uncompensated	1.5×10^{-13}	A/RH
Compensated (95%)	1.2×10^{-14}	A/RH

NOTES

1. Other similar detectors are available with titanium electrodes at a reduction in cost with an increase in gamma sensitivity and heating.
2. Detectors similar to the WL-23085 but having a different gas fill for higher temperature operation and/or different fill pressure for operation at another voltage range over another flux range are also available from Westinghouse. Specific operational details will be supplied on request.
3. Capacitance is measured between an electrode and the case, with all other electrodes grounded to the case.
4. The pressurizing atmosphere must be dry and non-corrosive.
5. The saturation voltage for a saturation current density of 2×10^{-5} A/cm^2 of collector area is shown in Figure 1. The WL-23085 may be operated at higher current densities with a corresponding increase in saturation voltage. For additional information consult the manufacturer. For purposes of computing current density, the collector area is listed under "MECHANICAL".

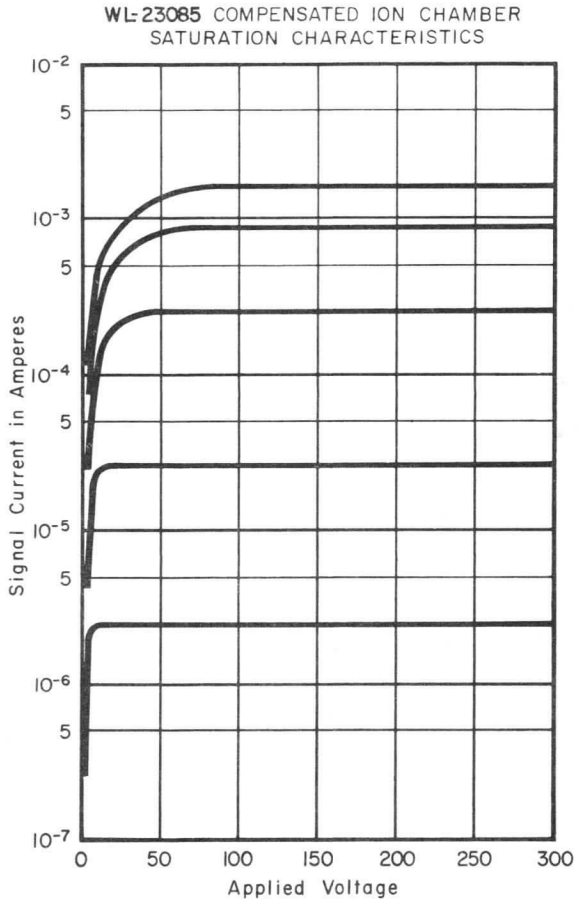

FIGURE 1

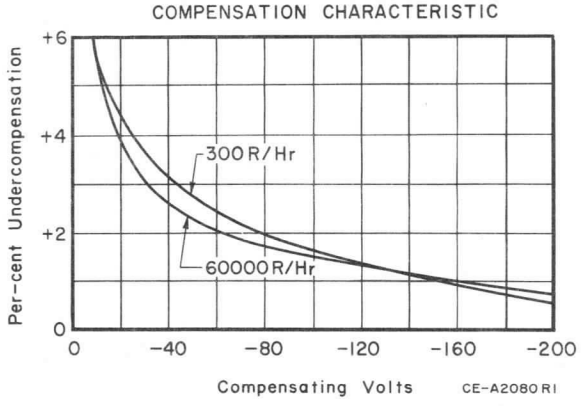

FIGURE 2

The information contained herein is supplied without assuming responsibility for infringement of patents or other rights of third parties which may result from its use. No license is granted by implication or otherwise under any patent or patent rights of Westinghouse Electric Corporation.

Westinghouse

WL-23088

September 1, 1965

HIGH TEMPERATURE FLUX MAPPING CAPSULE
FISSION DEVICE WL-23088

The WL-23088 is a miniature fission counter designed to detect thermal neutrons in the range from 5×10^3 to 5×10^8 neutrons/cm²/second. It consists of an active volume 0.220 inch in diameter and 0.312 inch long. The WL-23088 is operable in ambient temperatures up to 500°F, is rugged in construction and may be operated in any position.

The sensitive coating consists of uranium oxide highly enriched in the U-235 isotope. Thermal neutrons incident to the coating produce fission fragments which ionize the argon-nitrogen gas filling, thereby producing pulses. The pulse size and shape is comparable to that obtained with conventional fission counters, thereby permitting operation of the WL-23088 with commercially available circuitry having a gain of about 5×10^4.

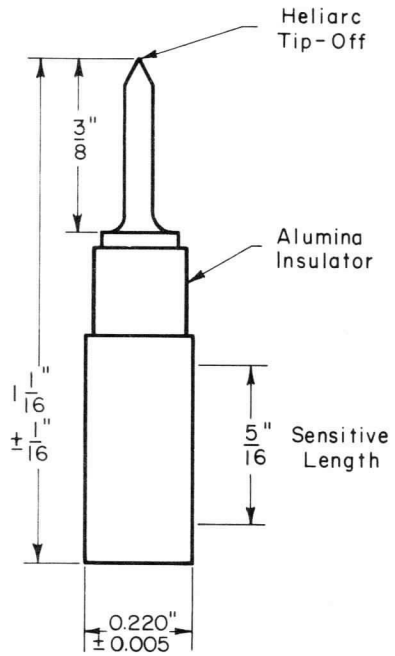

MECHANICAL

Body Diameter	0.220	Inch
Maximum Over-all Length	1-1/8	Inches
Approximate Sensitive Length	0.312	Inch
Net Weight	2	Ounces
Shipping Weight	1/2	Pound

MATERIALS

Body	Titanium
Center Electrode	Titanium
Insulation	Alumina Ceramic
Neutron Sensitive Material:	
Content	U_3O_8 Enriched to More Than 90% in U-235
Total Quantity	.0041 Grams
Gas Filling	Argon-Nitrogen Mixture

IMPEDANCE

Resistance:		
At 68°F	5×10^{10}	Ohms
At 500°F	5×10^8	Ohms
Capacitance (Approx.)	2.0	pF

MAXIMUM RATINGS

Voltage Between Electrodes	800 max.	Volts
Temperature	500 max.	°F

TYPICAL OPERATION

Operating Voltage	300	Volts
Operating Voltage Plateau	250 to 800	Volts
Thermal Neutron Flux Range	5×10^3 to 5×10^8	nv
Sensitivity (Note 1)	2.24×10^{-4}	cps/nv
Output Pulse Characteristics:		
Amplitude	10^{-2}	Volts
Inherent Rise Time	2×10^{-7}	Seconds

NOTE

1. The sensitivity is a function of the setting of the pulse height selector on the associated equipment.

PRINTED IN U.S.A. SUPERSEDES WX-4645 FLUX MAPPER

The information contained herein is supplied without assuming responsibility for infringement of patents or other rights of third parties which may result from its use. No license is granted by implication or otherwise under any patent or patent rights of Westinghouse Electric Corporation.

IN-CORE FISSION CHAMBER TYPE WL-23089

The WL-23089 is a miniature fission chamber designed for in-core operation in thermal neutron flux levels up to 1×10^{14} neutrons/cm²/second The chamber is constructed of stainless steel with high purity alumina insulation and will operate in any position at ambient temperatures up to 400 °C. The detector is provided with an integral coaxial cable with a stainless steel jacket and alumina insulation. The coaxial cable is designed to be located within a Teleflex cable for use with a mechanical drive system. The WL-23089 has a neutron sensitivity of 2×10^{-17} amperes/neutron/cm²/second and a gamma sensitivity of 1.5×10^{-14} amperes/roentgen/hour.

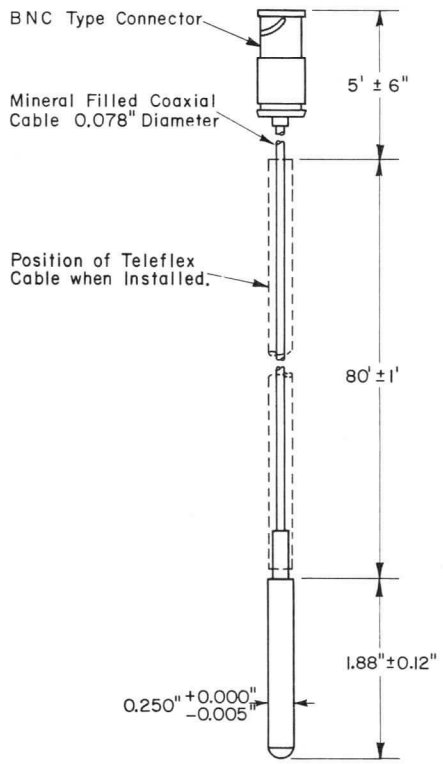

MECHANICAL

Diameter (Chamber)	0.250 +0.000 −0.005	Inch
Length:		
Chamber	1.88 ± 0.12	Inch
Cable	85	Feet
Sensitive Length	1	Inch
Connector	BNC Type	

MATERIALS

Cable Sheath	Stainless Steel
Outer Case (Detector)	Stainless Steel
Inner Electrode	Stainless Steel
Insulation (Detector and Cable)	Al_2O_3
(Connector)	Teflon
Neutron Sensitive Material:	
Content	U_3O_8 Enriched to more than 90% in U-235
Gas Filling	Helium

IMPEDANCE

Resistance (Minimum 20 °C)	2×10^{10}	Ohms
Resistance (Minimum 200 °C)	1×10^{9}	Ohms
Resistance (Minimum 400 °C)	5×10^{7}	Ohms
Capacitance (Detector Plus Cable) Approx.	3500	pF

MAXIMUM RATINGS

Voltage Between Electrodes	250	max.	Volts
Temperature	400	max.	°C
Thermal Neutron Flux	1×10^{14}	max.	nv
Gamma Flux	1×10^{9}	max.	R/Hr
Total Integrated Neutron Flux at 400 °C for 10% Loss in Sensitivity	3.0×10^{20}		nvt

TYPICAL OPERATION

Operating Voltage (Note 1)	25 to 200	Volts
Thermal Neutron Flux (Note 2)	1×10^{14}	nv
Thermal Neutron Sensitivity	2×10^{-17}	A/nv
Gamma Sensitivity	1.5×10^{-14}	A/R/Hr

NOTES

1. Saturation voltage varies with neutron flux level. See Figure 1.
2. Lower limit varies with temperature and gamma flux.

WESTINGHOUSE ELECTRIC CORPORATION, ELECTRONIC TUBE DIVISION, ELMIRA, NEW YORK

Westinghouse®

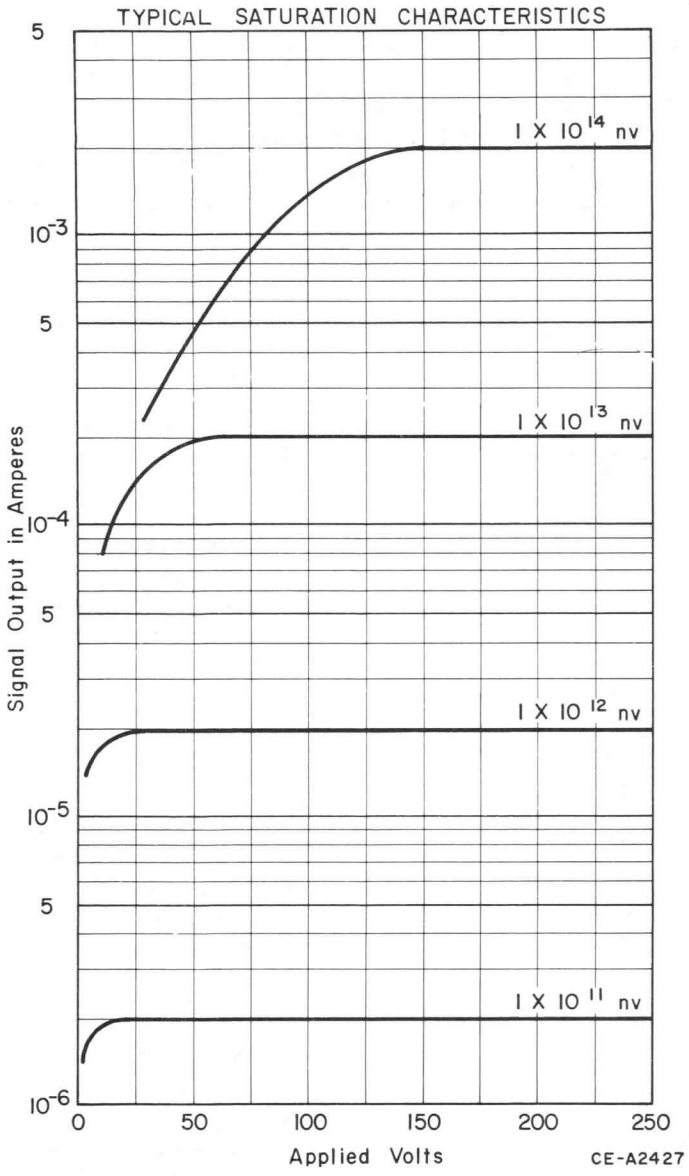

FIGURE 1

The information contained herein is supplied without assuming responsibility for infringement of patents or other rights of third parties which may result from its use. No license is granted by implication or otherwise under any patent or patent rights of Westinghouse Electric Corporation.

HIGH TEMPERATURE FLUX MAPPING FISSION CHAMBER TYPE WL-23092

The WL-23092 is a miniature fission counter designed to detect thermal neutrons in the range from 10^3 to 10^8 neutrons/cm²/second. It consists of an active volume 0.210 inch in diameter and 0.5 inch long, with an integral radiation resistant, rigid coaxial cable approximately twenty feet long. The entire detector, including the connector, is operable in ambient temperatures up to 500°F. The detector is rugged in construction and may be operated in any position.

The sensitive coating consists of uranium oxide highly enriched in the U-235 isotope. Thermal neutrons incident to the coating produce fission fragments which ionize the argon-nitrogen gas filling, thereby producing pulses. The pulse size and shape is comparable to that obtained with conventional fission counters, thereby permitting operation of the WL-23092 with commercially available circuitry with a gain of about 5×10^4.

The exposed portions of the chamber and integral cable are stainless steel, thereby permitting operation of the sensitive volume under water. (Note 1)

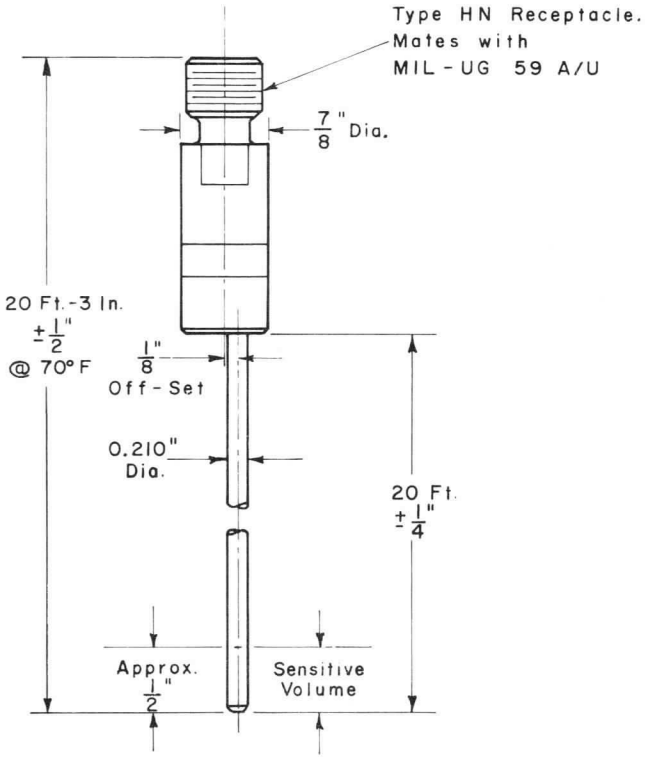

MECHANICAL

Body Diameter	0.210	Inch
Head Diameter	7/8	Inch
Overall Length	20-1/4	Feet
Approximate Sensitive Length	1/2	Inch
Net Weight	2	Pounds
Shipping Weight	29	Pounds

MATERIALS

Body	Stainless Steel
Center Electrode	Stainless Steel
Insulation	Alumina Ceramic
Neutron Sensitive Material:	
Content	U_3O_8 Enriched to more than 90% in U-235
Total Quantity	0.00385 Grams
Gas Filling	Argon-Nitrogen Mixture

IMPEDANCE (At 500°F)

Resistance (Minimum)	10^8	Ohms
Capacitance (Approx.)	260	pF

MAXIMUM RATINGS

Voltage Between Electrodes	500 max.	Volts
Temperature	500 max.	Degrees F
External Pressure (Note 2)	180 max.	Pounds/Inch²

TYPICAL OPERATION

Operating Voltage	300	Volts
Operating Voltage Plateau (Figures 2 & 3)	300 to 500	Volts
Thermal Neutron Flux Range	10^3 to 10^8	nv
Sensitivity (Note 3)	1.5×10^{-3}	cps/nv
Output Pulse Characteristics:		
Amplitude	10^{-4}	Volts
Inherent Rise Time	2×10^{-7}	Seconds

NOTES

1. In operation of the unit partially immersed, care must be taken to keep the connector free of water.
2. If the connector end of the detector is exposed to pressure, the pressurizing atmosphere must be dry.
3. The sensitivity is a function of the setting of the pulse height selector on the associated equipment. See Figure 1.

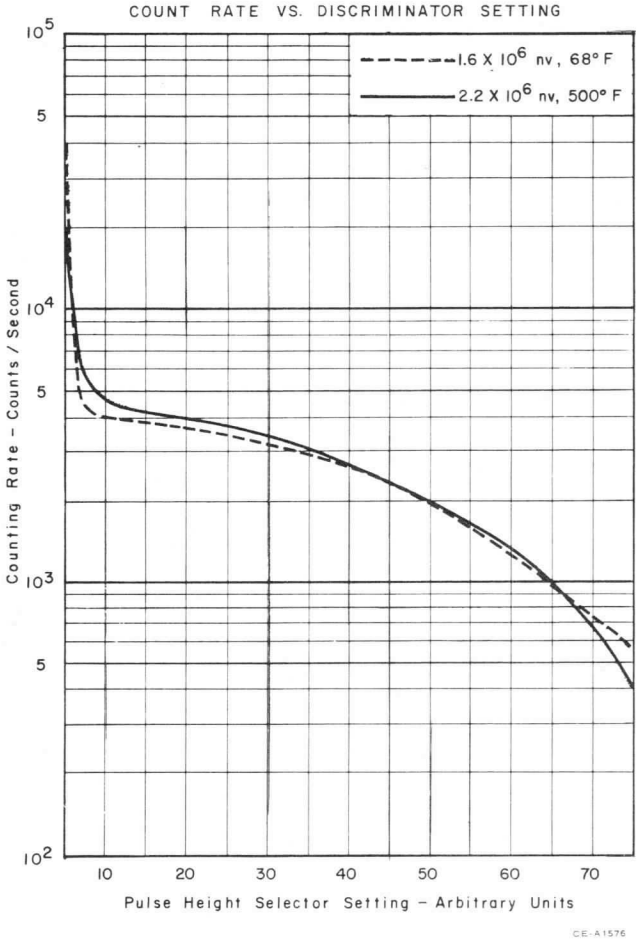

FIGURE 1

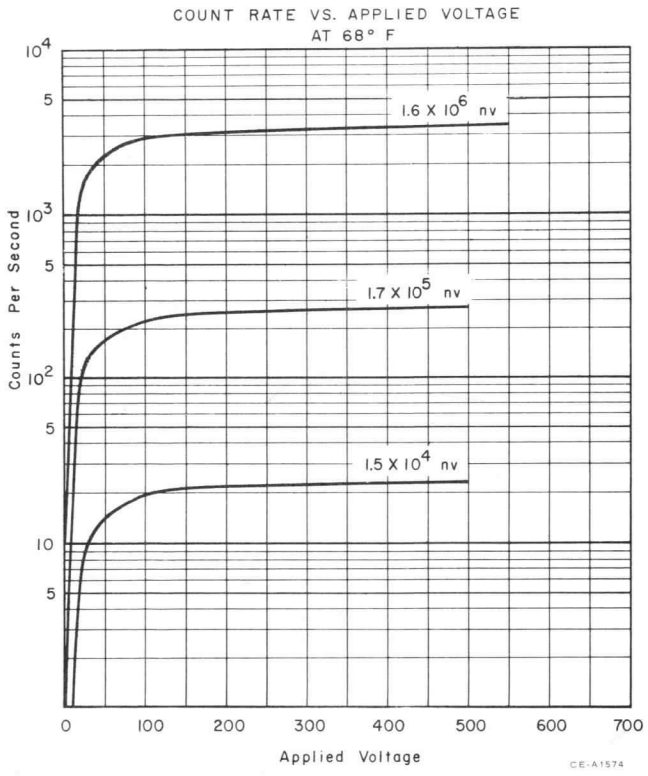

FIGURE 2

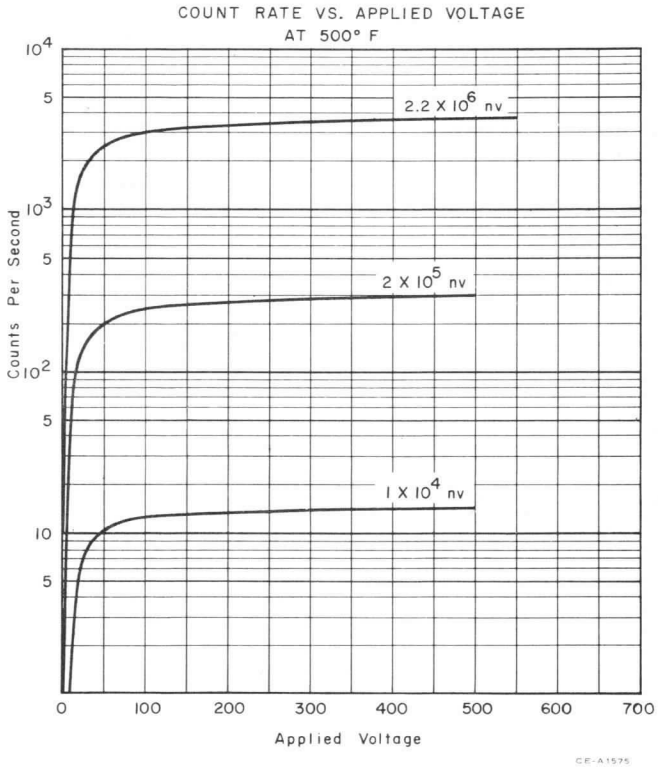

FIGURE 3

The information contained herein is supplied without assuming responsibility for infringement of patents or other rights of third parties which may result from its use. No license is granted by implication or otherwise under any patent or patent rights of Westinghouse Electric Corporation.

Westinghouse

WL-23149

December 1, 1965

HIGH TEMPERATURE FISSION COUNTER TYPE WL-23149

The WL-23149 fission counter is designed to detect thermal neutrons in the range of 2.0 to 2.0 × 10^5 neutrons/cm^2/second. The WL-23149 is extremely rugged, designed to meet MIL-S-901 for shock and MIL-STD-167 (Type 1) for vibration, and may be operated in any position at temperatures up to 200 °C.

The WL-23149 consists of an aluminum outer case and electrodes, with high purity alumina ceramic insulators throughout, including those used in the type HN coaxial connector. In typical operation, the counter has a thermal neutron sensitivity of 0.5 counts/neutron/cm^2 throughout a wide range of applied voltage.

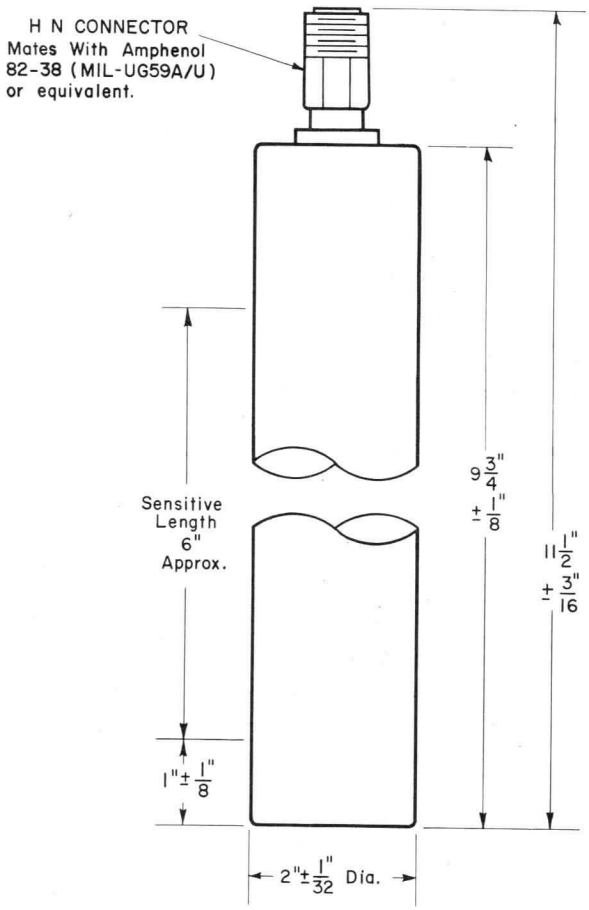

MECHANICAL

Maximum Diameter	2-1/32	Inches
Maximum Overall Length	11-11/16	Inches
Approximate Sensitive Length	6	Inches
Net Weight	1-3/4	Pounds
Shipping Weight	12	Pounds

MATERIALS

Outer Case	1100 Aluminum	
Electrodes	1100 Aluminum	
Insulation	Alumina Ceramic	
Neutron Sensitive Material:		
Content	U_3O_8 Enriched to 93% in U-235	
Thickness	1	mg/cm^2
Total Quantity	0.83	Grams
Gas Filling	97%A, 3%CO_2	
Gas Pressure	152 Cm of Hg	

IMPEDANCE

Resistance (minimum at 200 °C)	10^8	Ohms
Capacitance (maximum)	200	pF

MAXIMUM RATINGS

Voltage Between Electrodes	1000	Volts
Temperature	200	Degrees C
External Pressure (Note 1)	180	Pounds/$Inch^2$
Thermal Neutron Flux	1.0 × 10^{11}	nv

TYPICAL OPERATION

Operating Voltage	400	Volts
Operating Voltage Plateau	200 to 800	Volts
Thermal Neutron Flux Range	.2.0 to 2.0 × 10^5	nv
Sensitivity (Note 2)	0.50	CPS/nv
Output Pulse Characteristics:		
Amplitude (Unloaded)	2 × 10^{-4}	Volts
Inherent Rise Time (Average) (Note 3)	7 × 10^{-8}	Seconds

NOTES

1. The pressurizing atmosphere must be dry and non-corrosive.
2. The sensitivity is 0.50 counts/neutron/cm^2 when the alpha background counting rate of the naturally radioactive uranium is adjusted to 5 counts/second. By varying the pulse height selector on the associated circuitry other sensitivities are available.
3. The A-CO_2 gas fill reduced rise time to 7 × 10^{-8} second compared to 2 × 10^{-7} for A-N_2 fill.

PRINTED IN U.S.A. SUPERSEDES WX-31095 FISSION COUNTER

The information contained herein is supplied without assuming responsibility for infringement of patents or other rights of third parties which may result from its use. No license is granted by implication or otherwise under any patent or patent rights of Westinghouse Electric Corporation.

Westinghouse®

WL-23150

November 1, 1965

FISSION COUNTER TYPE WL-23150

The WL-23150 fission chamber is designed to detect thermal neutrons in the range of 3.0 to 3.0 × 10^5 neutrons/cm^2/second. The detector is rugged in construction and may be operated in any position at temperatures up to 200°C.

The WL-23150 is constructed of aluminum, with high-purity-alumina ceramic insulators throughout, including those used in the type HN coaxial connector. In typical operation the WL-23150 has a thermal neutron sensitivity of approximately 0.35 counts/neutron/cm^2 throughout a wide range of applied voltage.

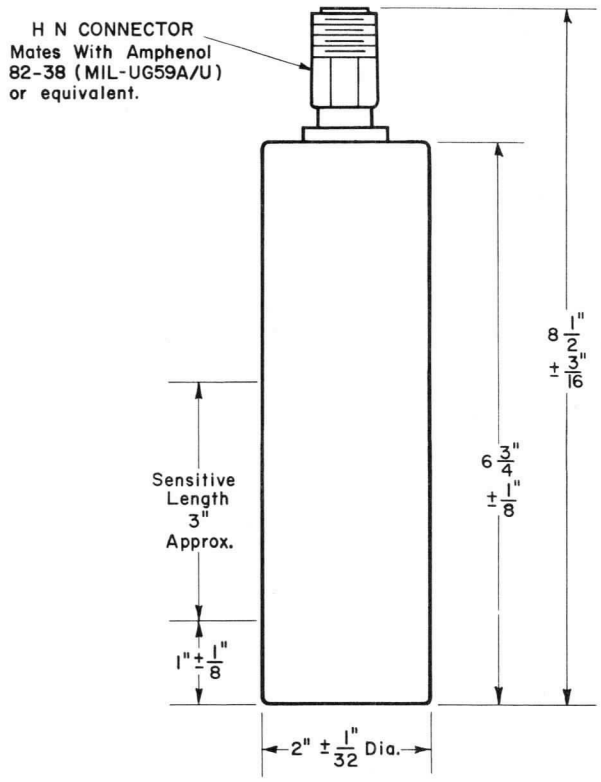

MECHANICAL

Maximum Diameter	2-1/32	Inches
Maximum Overall Length	8-11/16	Inches
Approximate Sensitive Length	3	Inches
Net Weight	1-1/2	Pounds
Shipping Weight	12	Pounds

MATERIALS

Outer Case	Aluminum
Electrodes	Aluminum
Insulation	Alumina Ceramic
Neutron Sensitive Material:	
Content	U_3O_8 Enriched to 93% in U-235
Thickness	2 mg/cm^2
Total Quantity	0.86 Grams
Gas Filling	Argon-Nitrogen Mixture
Gas Pressure	76 Cm of Hg

IMPEDANCE

Resistance (Min. at 200°C)	10^8	Ohms
Capacitance (Approx.)	150	pF

MAXIMUM RATINGS

Voltage Between Electrodes	1000	Volts
Temperature	200	Degrees C
External Pressure (Note 1)	180	Pounds/Inch^2
Thermal Neutron Flux	10^{11}	nv

TYPICAL OPERATION

Operating Voltage	300	Volts
Operating Voltage Plateau	200 to 800	Volts
Thermal Neutron Flux Range	3.0 to 3.0 × 10^5	nv
Sensitivity (Note 2)	0.35	CPS/nv
Output Pulse Characteristics:		
Amplitude (Unloaded)	2 × 10^{-4}	Volts
Inherent Rise Time (Average)	2 × 10^{-7}	Seconds

NOTES

1. The pressurizing atmosphere must be dry and non-corrosive.
2. The sensitivity is 0.35 counts/neutron/cm^2 when the alpha background counting rate of the naturally radioactive uranium is adjusted to 5 counts/second.

PRINTED IN U.S.A. SUPERSEDES WX-31100 FISSION COUNTER

The information contained herein is supplied without assuming responsibility for infringement of patents or other rights of third parties which may result from its use. No license is granted by implication or otherwise under any patent or patent rights of Westinghouse Electric Corporation.

October 15, 1965

WL-23151 GAMMA IONIZATION CHAMBER

The WL-23151 ionization chamber has been designed specifically for in-core gamma flux monitoring. Its high-temperature capability and relatively small diameter coupled with an operating range from 1.0×10^{-1} to 5.0×10^{7} R/Hr make it suitable for most in-core reactor applications. The lower limit of the flux range may be extended by the use of low noise equipment. The chamber incorporates a special electrode design which results in nearly the same sensitivity for flux energies from 0.1 Mev to 3 Mev. The sensitivity is 1.0×10^{-11} amperes/R/Hr.

The WL-23151 incorporates guard-ring construction to minimize insulator leakage, and it may be operated in any position at temperatures up to 300 °C.

The chamber is constructed of high-purity materials with low neutron cross-sections to reduce the effect of artificial radioactivity. The electrode and case material is 1100 aluminum and the insulation is high-purity alumina.

MECHANICAL

Maximum Diameter	2-1/16	Inches
Maximum Over-all Length	12-1/2	Inches
Approximate Sensitive Length	8	Inches
Net Weight	1-3/4	Pounds
Shipping Weight	8	Pounds

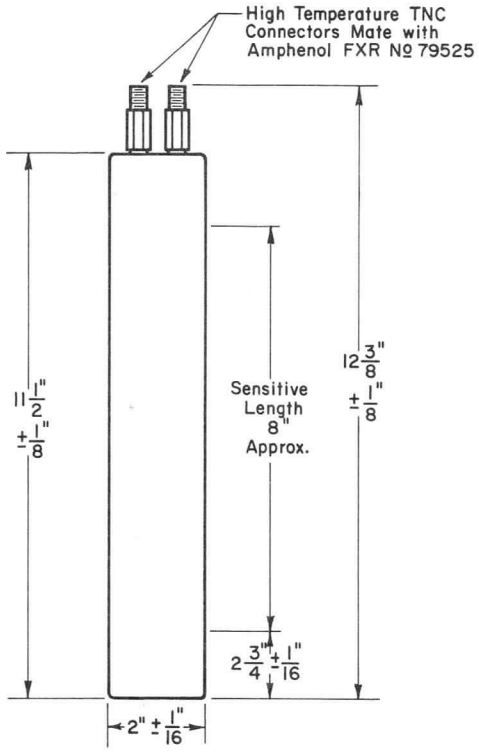

MATERIALS

Outer Case	1100 Aluminum
Electrodes	1100 Aluminum
Insulation	Alumina
Gas Filling	Nitrogen

IMPEDANCE

Resistance: (Note 1)		
H.V. Electrode to Case (minimum)	10^{12}	Ohms
Signal Electrode to Case (minimum)	10^{13}	Ohms
Capacitance: (Note 2)		
Signal Electrode to Case (Approx.)	125	pF
H.V. Electrode to Case (Approx.)	210	pF

MAXIMUM RATINGS

Voltage Between Electrodes (d-c)	1500 max.	Volts
Temperature	300 max.	Degrees C
External Pressure (Note 3)	180 max.	PSI
Gamma Flux (Note 4)	5×10^{7} max.	R/Hr

TYPICAL OPERATION

Operating Voltage	100 to 1200	Volts
Gamma Sensitivity	1.0×10^{-11}	A/R/Hr
Gamma Flux	1.0×10^{-1} to 5×10^{7}	R/Hr
Saturation Characteristics:		
$V_{0.9}$ at 5×10^{7} R/Hr (Note 5)	300	Volts
$V_{1.1}$ all Current Levels (Note 6)	1940	Volts

NOTES

1. The chamber may not be immersed directly in water and high humidity environments should be avoided as they will impair performance.
2. Capacitance is measured between an electrode and case with the other electrode grounded.
3. The pressurizing atmosphere must be dry and non-corrosive.
4. This exposure limit is based on internal heating limits and assumes a shell temperature of 300 °C. A shell temperature of 20 °C will allow operation up to a maximum of 5×10^{8} R/hr.
5. $V_{0.9}$ is the voltage at which the current is 90% (0.9) of the saturated value at that flux level.
6. $V_{1.1}$ is the voltage at which the current is 110% (1.1) of the saturated value at that flux level.

The information contained herein is supplied without assuming responsibility for infringement of patents or other rights of third parties which may result from its use. No license is granted by implication or otherwise under any patent or patent rights of Westinghouse Electric Corporation.

Westinghouse®

WL-23152

October 15, 1965

WL-23152 GAMMA IONIZATION CHAMBER

The WL-23152 ionization chamber has been designed specifically for reactor gamma flux monitoring. The high temperature capability, small diameter and relatively high sensitivity make it suitable for background monitoring as well as in-core reactor applications. The chamber incorporates a special electrode design which results in a sensitivity of about 1.0×10^{-10} amperes/R/Hr over the range of flux energies from 0.1 Mev to 3 Mev.

The WL-23152 incorporates guard-ring construction to minimize insulator leakage, and it may be operated in any position at temperatures up to 300°C in a flux range from 1.0×10^{-2} R/Hr to 3.0×10^{7} R/Hr. The lower limit of the range may be extended for laboratory use by the use of low-noise equipment.

The chamber is constructed of high-purity materials with low neutron cross-sections to reduce the effect of artificial radioactivity. The electrode and case material is 1100 aluminum and the insulator is high-purity alumina.

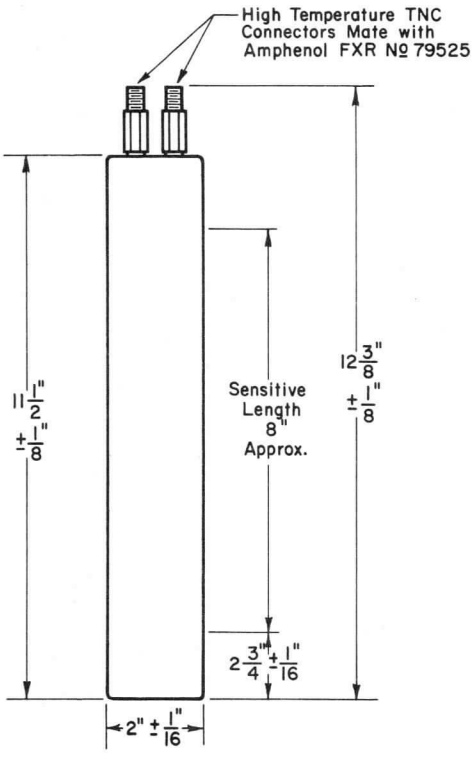

MECHANICAL		
Maximum Diameter	2-1/16	Inches
Maximum Over-all Length	12-1/2	Inches
Approximate Sensitive Length	8	Inches
Net Weight	1-3/4	Pounds
Shipping Weight	8	Pounds
MATERIALS		
Outer Case	1100 Aluminum	
Electrodes	1100 Aluminum	
Insulation	Alumina	
Gas Filling	Xenon	
IMPEDANCE		
Resistance (Note 1):		
H.V. Electrode to Case (minimum)	10^{12}	Ohms
Signal Electrode to Case (minimum)	10^{13}	Ohms
Capacitance (Note 2):		
H.V. Electrode to Case (Approx.)	210	pF
Signal Electrode to Case (Approx.)	125	pF
MAXIMUM RATINGS		
Voltage Between Electrodes (d-c)	1500 max.	Volts
Temperature	300 max.	Degrees C
External Pressure (Note 3)	180 max.	PSI
Gamma Flux	5×10^{7} max.	R/Hr
TYPICAL OPERATION		
Operating Voltage	100 to 1200	Volts
Gamma Sensitivity	1.0×10^{-10}	A/R/Hr
Gamma Flux	1.0×10^{-2} to 3×10^{7}	R/Hr
Saturation Characteristics:		
$V_{0.9}$ at 3×10^{7} R/Hr (Note 4)	700	Volts
$V_{1.1}$ at 3×10^{7} R/Hr (Note 5)	1650	Volts

NOTES

1. Chambers should not be immersed directly in water and high humidity environments should be avoided as they will impair performance.
2. Capacitance is measured between an electrode and case with the other electrode grounded.
3. The pressurizing atmosphere must be dry and non-corrosive.
4. $V_{0.9}$ is the voltage at which the current is 90% (0.9) of the saturated value at that flux level.
5. $V_{1.1}$ is the voltage at which the current is 110% (1.1) of the saturated value at that flux level.

PRINTED IN U.S.A.

NEW INFORMATION

GAMMA IONIZATION CHAMBER

The information contained herein is supplied without assuming responsibility for infringement of patents or other rights of third parties which may result from its use. No license is granted by implication or otherwise under any patent or patent rights of Westinghouse Electric Corporation.

Westinghouse

WL-23153

December 1, 1965

BF_3 PROPORTIONAL COUNTER TYPE WL-23153

The WL-23153 proportional counter is designed to detect neutrons of thermal energy in the range from 5.0×10^{-2} to 5.0×10^{3} neutrons/cm²/second. The counter is extremely rugged, designed to meet military specification MIL-S-901 for Shock and MIL-STD-167 (Type 1) for Vibration, and will operate in any position at temperatures up to 250°F.

The materials used in the construction of the detector, including the connector, have been selected for low activation properties, thereby reducing the inherent background counting rate. The thermal neutron sensitivity of the WL-23153 is approximately 20 counts/neutron/cm².

MECHANICAL

Maximum Diameter	1-1/32	Inches
Maximum Overall Length	15-9/16	Inches
Approximate Sensitive Length	12	Inches
Net Weight	8	Ounces
Shipping Weight	3	Pounds

MATERIALS

Body	EC Grade Aluminum
Electrode	0.005 Inch Dia. Tungsten
Insulation:	
Electrode Supports	Alumina Ceramic
Neutron Sensitive Material:	
Content	Boron Trifluoride Enriched to 96% in Boron-10
Pressure	167 Cm of Hg

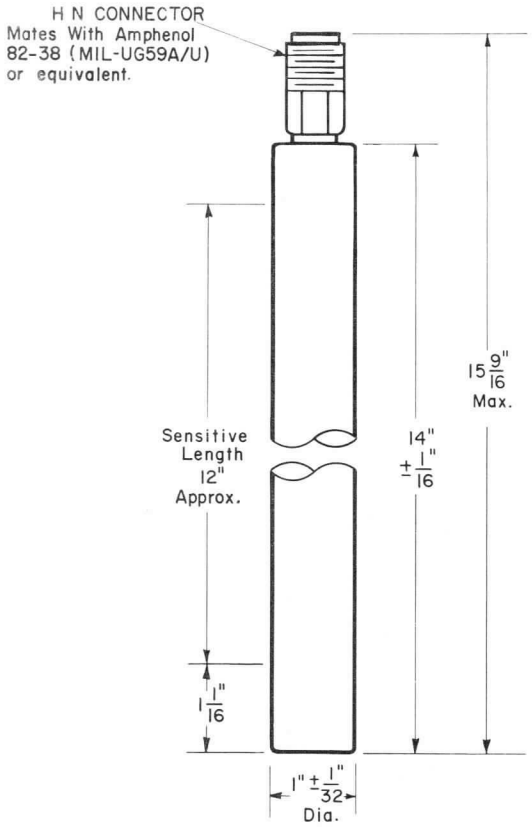

IMPEDANCE

Resistance (minimum)	10^{11}	Ohms
Capacitance (Approx.)	.5	pF

MAXIMUM RATINGS

Voltage Between Electrodes	6500	Volts
Temperature	250	Degrees F
External Pressure (Note 3)	180	Pounds/Inch²
Operating:		
Thermal Neutron Flux	2.5×10^{4}	nv
Non-Operating:		
Thermal Neutron Flux (Note 1)	10^{10}	nv
Gamma Flux (Note 1)	10^{5}	R/Hr

TYPICAL OPERATION (Note 2)

Operating Voltage	4700	Volts
Thermal Neutron Flux Range:		
With Conventional Circuitry	5.0×10^{-2} to 5.0×10^{3}	nv
With Special Circuitry (Note 4)	2.5×10^{-2} to 2.5×10^{4}	nv
Sensitivity	.20	CPS/nv
Plateau Characteristics:		
Length (minimum)	200	Volts
Overall Slope (maximum)	4	Per-cent
Output Pulse Characteristics:		
Amplitude (Approx. Unloaded)	60	Millivolts
Inherent Rise Time (Average)	10^{-7}	Seconds
Inherent Background (Note 5) (Approx.)	0.2	Counts/Second

NOTE

1. When in flux levels exceeding the maximum operating level the high voltage should be removed, and the tube shorted through a maximum of 3 megohms.
2. Data given are for high impedance circuitry. These characteristics will vary depending upon the associated circuitry.
3. The pressurizing atmosphere must be dry and non-corrosive.
4. With low-noise, high resolution circuitry.
5. In radiation free areas, and with low-noise circuitry, values of the order of 4 to 6 counts per minute have been observed. High humidity environments should be avoided since they may impair performance.

PRINTED IN U.S.A. SUPERSEDES WX-31191 PROPORTIONAL COUNTER

The information contained herein is supplied without assuming responsibility for infringement of patents or other rights of third parties which may result from its use. No license is granted by implication or otherwise under any patent or patent rights of Westinghouse Electric Corporation.

Westinghouse

WL-23155

December 1, 1965

HELIUM–3 PROPORTIONAL COUNTER TYPE WL-23155

The WL-23155 proportional counter is designed to detect neutrons of thermal energy in the range from 5×10^{-2} to 5×10^{3} neutrons/cm^2/second. The jitter time, important in slow neutron time-of-flight studies, is 1.5×10^{-6} seconds at an operating voltage of 5000 volts. The counter is extremely rugged and will operate in any position at temperatures up to 300°F.

The WL-23155 consists of an EC grade aluminum outer case with high-purity alumina ceramic insulation. EC provides higher purity than 1100 aluminum, thus minimizing the inherent background counting rate. The counter has a thermal neutron sensitivity of 22 counts/neutron/cm^2 at an operating voltage of 5000 volts.

MECHANICAL

Maximum Diameter	1-1/32	Inches
Maximum Overall Length	10-1/2	Inches
Approximate Sensitive Length	6	Inches
Sensitive Diameter	0.940	Inch
Net Weight	6	Ounces
Shipping Weight	3	Pounds

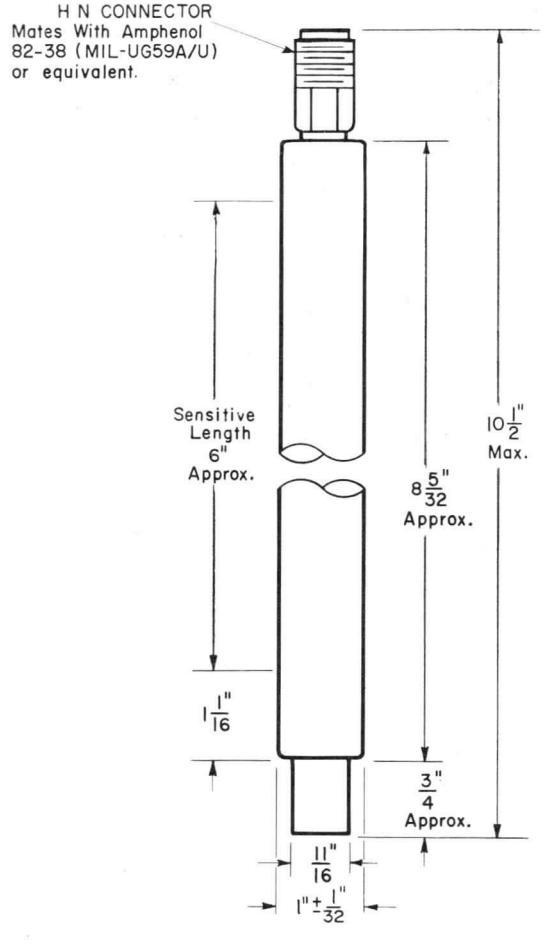

MATERIALS

Body	EC Grade Aluminum, 0.030" Wall
Electrode	0.010 Inch Dia. Tungsten
Insulation:	
Electrode Supports	Alumina Ceramic
Neutron Sensitive Material:	
Content	Helium-CO_2
Enrichment	99.5% He-3
Pressure	760 Cm of Hg

IMPEDANCE

Resistance (minimum)	10^{11}	Ohms
Capacitance (Approx.)	10	pF

MAXIMUM RATINGS

Voltage Between Electrodes	6000 max.	Volts
Temperature	300 max.	Degrees F
External Pressure (Note 1)	180 max.	Pounds/Inch^2
Operating:		
Thermal Neutron Flux	5×10^{3} max.	nv
Non-Operating:		
Thermal Neutron Flux (Note 2)	10^{10} max.	nv
Gamma Flux	10^{5} max.	R/Hr

TYPICAL OPERATION (Note 3)

Operating Voltage	5000	Volts
Thermal Neutron Flux Range	5×10^{-2} to 5×10^{3}	nv
Sensitivity	.22	CPS/nv
Plateau Characteristics:		
Length (minimum)	200	Volts
Overall Slope (maximum)	5%/100	Volts
Output Pulse Characteristics:		
Amplitude (Approx.)	2.8×10^{-13}	Coulomb
Inherent Rise Time (Average)	3×10^{-6}	Second
Inherent Background (Note 4) (Approx.)	0.2	Counts/Second
Jitter Time	1.5×10^{-6}	Second

NOTES

1. The pressurizing atmosphere must be dry and non-corrosive.
2. Exposure to high neutron flux levels results in tritium buildup, thus increasing the background counting rate.
3. These characteristics will vary depending upon the associated circuitry.
4. In radiation free areas, and with low-noise circuitry, values of the order of 4 to 6 counts per minute have been observed. High humidity environments should be avoided since they may impair performance.

PRINTED IN U.S.A. SUPERSEDES WX-31116 PROPORTIONAL COUNTER

The information contained herein is supplied without assuming responsibility for infringement of patents or other rights of third parties which may result from its use. No license is granted by implication or otherwise under any patent or patent rights of Westinghouse Electric Corporation.

Westinghouse

WL-23188

August 15, 1966

SELF-POWERED IN-CORE NEUTRON DETECTOR TYPE WL-23188

The WL-23188 self-powered, in-core neutron detector is designed to detect thermal neutron fluxes greater than 10^7 neutrons/cm^2/second. The detector requires no external power supply and generates a signal which is directly proportional to the incident thermal neutron flux.

The detector consists of a stainless steel sheathed coaxial cable with a stainless steel center wire and magnesium oxide insulation. The neutron sensitive end of the cable is constructed of stainless steel with a rhodium central emitter wire surrounded by aluminum oxide insulation. The thermal neutron sensitivity is approximately 6.6×10^{-21} amperes/neutron/cm^2/second.

MECHANICAL

Coaxial Cable Diameter	0.062	Inch
Coaxial Cable Length	14	Feet
Sensitive Length of Detector	2	Inches

MATERIALS

Cable Sheath	Stainless Steel
Detector Case	Stainless Steel
Cable Insulation	Magnesium Oxide
Detector Insulation	Aluminum Oxide
Emitter Wire	Rhodium
Connector	BNC Type

IMPEDANCE

Resistance (Minimum at 20° C)	10^{12}	Ohms
Resistance (Minimum at 400°C)	10^8	Ohms
Capacitance (Detector Plus Cable)	2800	pF

MAXIMUM RATINGS

Temperature	400	°C
Pressure	2000	Pounds/Inch^2

TYPICAL OPERATING CHARACTERISTICS

Neutron Flux Range	$>10^7$	nv
Thermal Neutron Sensitivity: Rhodium Emitter	6.6×10^{-21}	Amperes/nv
Gamma Background	Typically 2% of Neutron Signal	
Response Time	60	Seconds

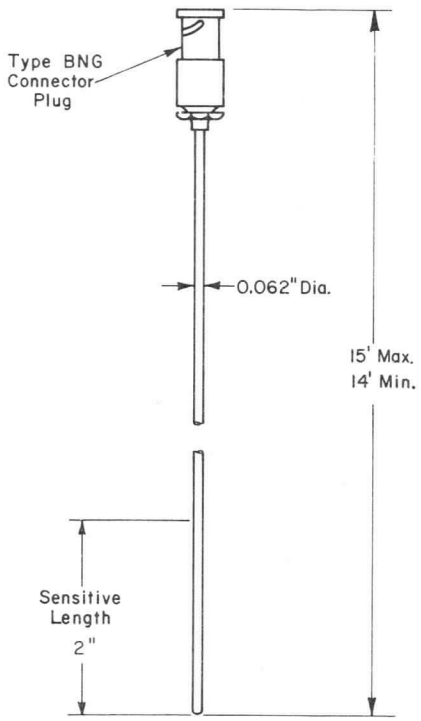

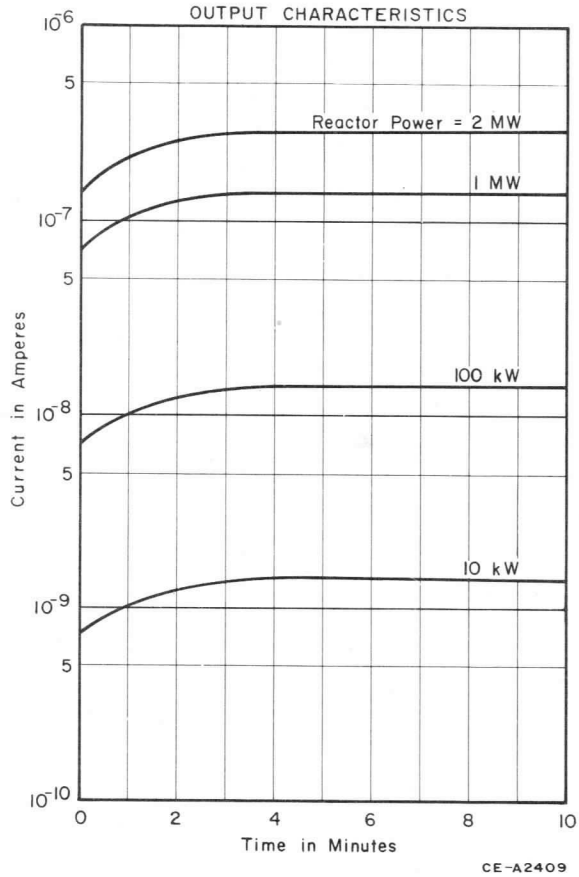

PRINTED IN U.S.A. NEW INFORMATION FLUX MAPPER

The information contained herein is supplied without assuming responsibility for infringement of patents or other rights of third parties which may result from its use. No license is granted by implication or otherwise under any patent or patent rights of Westinghouse Electric Corporation.

June 1, 1966

IN-CORE ION CHAMBER TYPE WL-23192

The WL-23192 is a miniature ionization chamber designed to detect in-core thermal neutron fluxes up to 1×10^{14} neutrons/cm²/second. The chamber is constructed of titanium with high purity alumina insulation and will operate in any position at ambient temperatures up to 400°C. The detector is provided with an integral 30-foot coaxial cable with a titanium jacket and alumina insulation. The WL-23192 has a neutron sensitivity of 1×10^{-17} amperes/neutron/cm²/second and a gamma sensitivity of 1×10^{-14} amperes/roentgen/hour.

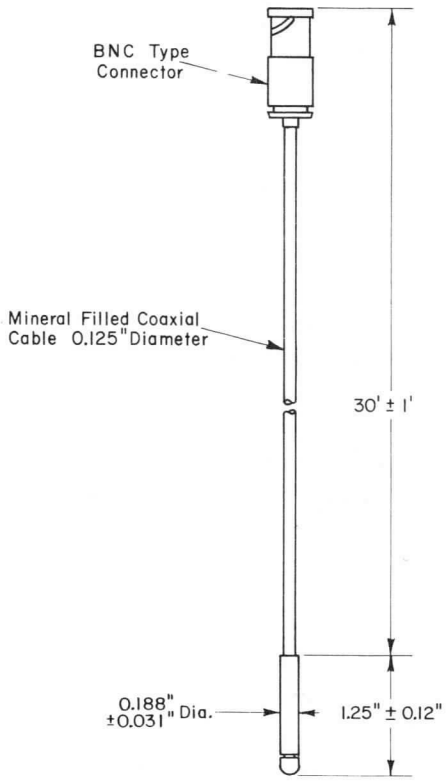

MECHANICAL		
Detector Diameter	0.188 ± 0.031	Inch
Cable Diameter	0.125	Inch
Length:		
Body	1.25 ± 0.12	Inch
Cable	30	Feet
Sensitive Length	0.5	Inch
Connector	BNC Type	
MATERIALS		
Cable Sheath	Titanium	
Outer Case (Detector)	Titanium	
Inner Electrode	Titanium	
Insulation (Detector and Cable)	Al_2O_3	
(Connector)	Teflon	
Neutron Sensitive Material:		
Content	Boron Enriched to 96% in B-10	
Thickness	1 mg/cm²	
Gas Filling	Nitrogen	
IMPEDANCE		
Resistance (Minimum at 20°C)	2×10^{11}	Ohms
Resistance (Minimum at 200°C)	2×10^{10}	Ohms
Resistance (Minimum at 400°C)	2×10^{8}	Ohms
Capacitance (Detector Plus Cable) Approx.	2000	pF
MAXIMUM RATINGS		
Voltage Between Electrodes	250 max.	Volts
Temperature	400 max.	°C
Thermal Neutron Flux	1×10^{14} max.	nv
Gamma Flux	1×10^{9} max.	R/Hr
Total Integrated Neutron Flux at 400°C for 10% Loss in Sensitivity	4.1×10^{19} max.	nvt
TYPICAL OPERATION		
Operating Voltage (Note 1)	25-200	Volts
Thermal Neutron Flux (Note 2)	1×10^{14}	nv
Thermal Neutron Sensitivity	1×10^{-17}	A/nv
Gamma Sensitivity	1×10^{-14}	A/R/Hr

NOTES

1. Saturation voltage varies with neutron flux level. See Figure 1.
2. Lower limit varies with temperature and gamma flux.

Westinghouse®

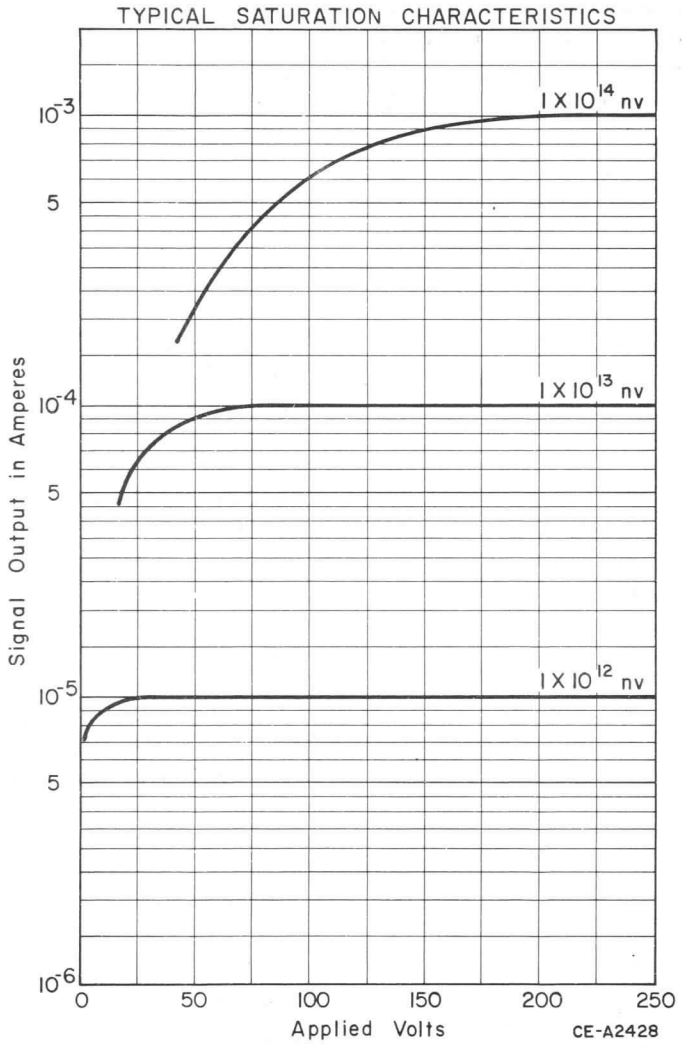

FIGURE 1

The information contained herein is supplied without assuming responsibility for infringement of patents or other rights of third parties which may result from its use. No license is granted by implication or otherwise under any patent or patent rights of Westinghouse Electric Corporation.

Westinghouse

Self Powered Detectors

0.062" Diameter
750 ° F Operation

1.0×10^{-20} A/nv – WL-23215
1.1×10^{-20} A/nv – WL-23226
1.4×10^{-21} A/nv – WX-30687

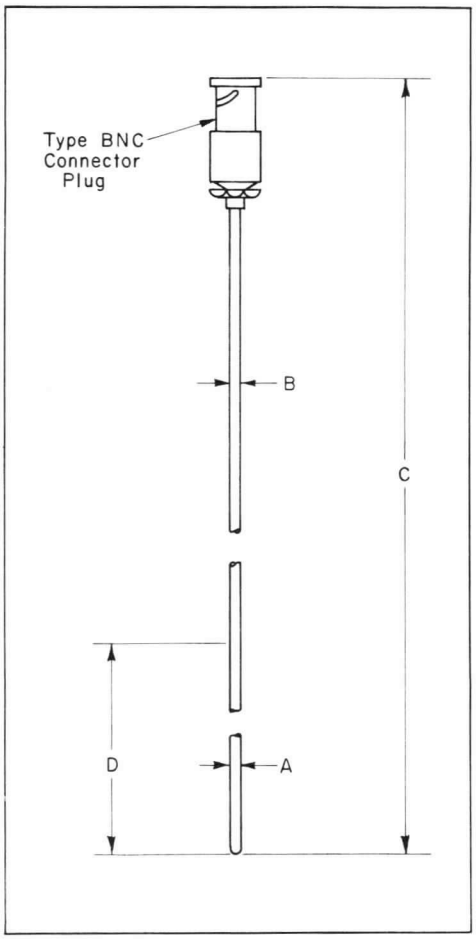

Application

The self-powered, in-core neutron detector is designed to detect thermal neutron fluxes greater than 10^7 neutrons/cm²/second. The detector requires no external power supply and generates a signal which is directly proportional to the incident thermal neutron flux.

Mechanical Dim.	Units	WL-23215	WL-23226	WX-30687
Detector Diameter – A – (Note 1)	Inch	0.062	0.062	0.062
Cable Diameter – B – (Note 1)	Inch	0.062	0.062	0.062
Cable Length – C – (Note 1)	Feet	28	30	16
Emitter Length – D – (Note 1)	Inches	3	52	34
Materials				
Cable Sheath	–	St. Stl.	St. Stl.	St. Stl.
Detector Case	–	St. Stl.	St. Stl.	St. Stl.
Detector Insulation	–	Al_2O_3	Al_2O_3	Al_2O_3
Cable Insulation	–	MgO	Al_2O_3	Al_2O_3
Emitter Wire	–	Rhodium	Vanadium	Cobalt
Impedance				
Min. Resistance at 70° F	Ohms	10^{12}	10^{12}	10^{12}
Min. Resistance at 750° F	Ohms	10^8	10^8	10^8
Total Capacitance	pF	5600	6000	3200
Maximum Ratings				
Temperature	max. ° F	750	750	750
Pressure	max. PSI	2000	2000	2000
Typical Operating Characteristics				
Neutron Flux Range	nv	$> 10^7$	$> 10^7$	$> 10^7$
Thermal Neutron Sensitivity	A/nv	1.0×10^{-20}	1.1×10^{-20}	1.4×10^{-21}
Response Time	Seconds	60	300	10^{-14}
Gamma Background	% of Neut. Sig.	2	2	5

Note

(1) Variations of specified sizes can be supplied for special requirements.

DATE - 1 NOV 1967
No.
FILE
CI
S
SM
P
G
F

Westinghouse Electric Corporation
Electronic Tube Division, Elmira, N.Y. 14902
Printed in U.S.A.

July 1967
New Information
S6-2D-11C, S5-11A; WI-800

Gamma Ionization Chamber

Westinghouse

Up to 5 x 10^9 R/Hr.
750°F Operation

Type: WL-23228
10^{-15} A/R/Hr. Sensitivity

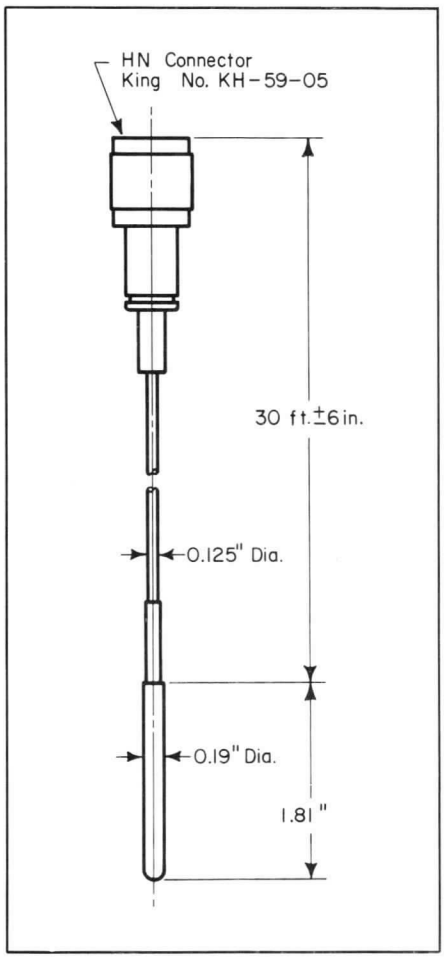

Application

The WL-23228 is an ionization chamber designed to measure gamma fluxes in the range from 1 x 10^6 to 5 x 10^9 roentgens/hour. The chamber is constructed of titanium with high-purity alumina insulation and will operate in any position at ambient temperatures up to 750°F. The detector is provided with an integral 30-foot coaxial cable with a titanium jacket and alumina insulation. The cable end is hermetically sealed and terminated with an HN-type connector. The WL-23228 has a gamma sensitivity of approximately 1 x 10^{-15} amperes/roentgen/hour.

Mechanical

Maximum Diameter (Detector)	0.19 Inch
Cable Diameter	0.125 Inch
Length:	
Body (max.)	1.81 Inch
Cable	30 Feet
Sensitive Length	0.5 Inch
Connector	HN-type King No. KH-59-05

Materials

Cable Sheath	Titanium
Outer Case (Detector)	Titanium
Inner Electrode	Titanium
Insulation (Detector and Cable)	Al_2O_3
Gas Filling	Nitrogen

Impedance

Resistance (minimum at 70°F)	2 x 10^{11} Ohms
Resistance (minimum at 400°F)	2 x 10^{10} Ohms
Resistance (minimum at 750°F)	2 x 10^8 Ohms
Capacitance (Detector plus Cable, Approx.)	750 pF

Maximum Ratings

Voltage Between Electrodes	200 Volts
Temperature	750 °F
Gamma Flux	5 x 10^9 R/Hr

Typical Operation

Operating Voltage	100 Volts
Gamma Sensitivity (Approx.)	1 x 10^{-15} amps/R/hr

Westinghouse Electric Corporation
Electronic Tube Division, Elmira, N. Y. 14902
Printed in U. S. A.

October 1967
New Information
S6-2D-11C, S5-11A, WI-800

High Temperature Coaxial Cables

Westinghouse

850°F Operation
Radiation Resistant
1000 Volt Operation

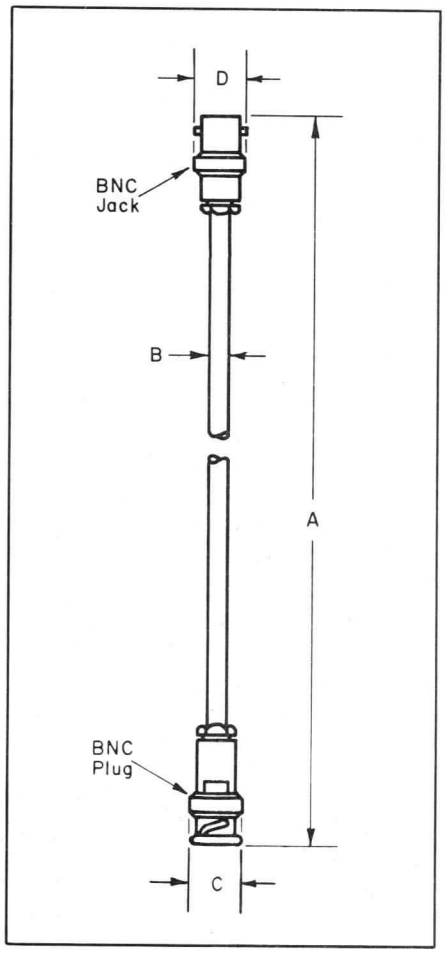

Application

These cables eliminate replacement of ordinary cables which deteriorate in ambient heat and radiation. They have a stainless steel body and are filled with aluminum oxide dielectric. These cables are very flexible and may be operated in any position at temperatures up to 850°F. The BNC connectors have ceramic insulators. One end mates with a cable jack and the other end with a plug.

Mechanical	Dim.	Units	WL-23229	WL-23285	WL-23286
Overall Length	A	—	See Note 2	See Note 2	See Note 2
Cable Diameter	B	Inch	0.062	0.125	0.187
Connector (Plug) Dia.	C	Inch	0.56	0.56	0.56
Connector (Jack) Dia.	D	Inch	0.56	0.56	0.56
Materials					
Cable Body		—	304 St. Steel	304 St. Steel	304 St. Steel
Cable Dielectric		—	Alumina	Alumina	Alumina
Center Conductor		—	304 St. Steel	304 St. Steel	304 St. Steel
Connectors		—	Brass	Brass	Brass
Connector Insulators		—	Alumina	Alumina	Alumina
Electrical					
Capacity (Approx.)		pF/Foot	50	70	70
Resistance (Min.)					
At 300°F		Ohms/Foot	10^{12}	5×10^{12}	5×10^{12}
At 500°F		Ohms/Foot	10^{11}	5×10^{11}	5×10^{11}
At 700°F		Ohms/Foot	10^{10}	5×10^{10}	5×10^{10}
At 850°F		Ohms/Foot	10^{9}	5×10^{9}	5×10^{9}
Operational					
Operating Voltage (Max.)		Volts	1000	1000	1000
Temperature (Max.)		°F	850	850	850

Notes

1. These cables are intended for use in high temperature and a relatively moisture free atmosphere. While the cable themselves are hermetically sealed, the seal between the cable and the connected part is not hermetically tight.
2. Length as specified by customer in feet. This number will occur as a suffix to the cable number.

Westinghouse Electric Corporation
Electronic Tube Division, Elmira, N. Y. 14902
Printed in U.S.A.

October 1967
New Information
S6–2D–11C, S5–11A, WI–800

Westinghouse

In-Core Fission Chamber

Up to 10^{14} nv
650° F Operation

Type: WL-23238
2.8×10^{20} nvt Life
1.5×10^{-17} A/nv Sensitivity

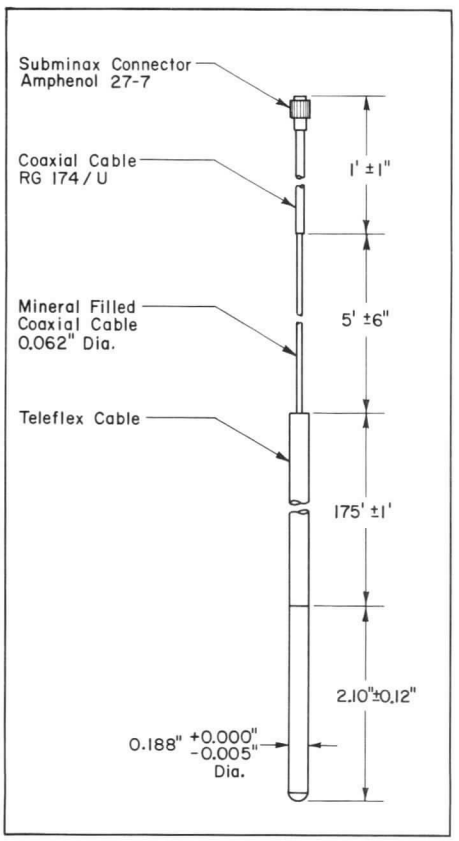

Application

The WL-23238 is a miniature fission chamber designed for in-core operation in thermal neutron flux levels up to 1×10^{14} neutrons/cm²/second. The chamber is constructed of stainless steel with high purity alumina insulation and will operate in any position at ambient temperatures up to 650° F. The detector is provided with an integral coaxial cable with a stainless steel jacket and alumina insulation. The coaxial cable is designed to be located within a drive cable for use with a mechanical drive system. The WL-23238 has a neutron sensitivity of 1.5×10^{-17} amperes/neutron/cm²/second and a gamma sensitivity of 2.0×10^{-14} amperes/roentgen/hour.

Mechanical

Diameter (Chamber)	0.188 +0.000 −0.005	Inch
Diameter (Cable)	0.062 +0.000 −0.002	Inch
Length:		
Chamber	2.10 ± 0.12	Inch
Cable	181 ± 1	Feet
Sensitive Length	1	Inch
Connector	Subminax Plug, Amphenol 27-7	

Materials

Cable Sheath	304 Stainless Steel
Outer Case (Detector)	304 Stainless Steel
Inner Electrode	Stainless Steel
Insulation (Detector and Cable)	Aluminum Oxide
Neutron Sensitive Material:	
Content	U_3O_8 Enriched to More Than 90% In U_{235}
Gas Filling	Helium

Impedance

Resistance (Minimum at 100° F)	5×10^{10}	Ohms
Resistance (Minimum with 25 Feet of Cable at 650° F)	5×10^{7}	Ohms
Capacitance (Detector Plus Cable, Max.)	20	nF

Maximum Ratings

Voltage Between Electrodes	200	max.	Volts
Temperature	650	max.	°F
Pressure	50	max.	PSI
Thermal Neutron Flux	1×10^{14}	max.	nv
Gamma Flux	1×10^{9}	max.	R/Hr
Total Integrated Neutron Flux at 650° F for 10% Loss in Sensitivity	2.8×10^{20}	max.	nvt

Typical Operation

Operating Voltage (Note 1)	50 to 150	Volts
Thermal Neutron Flux Range	1×10^{11} to 1×10^{14}	nv
Thermal Neutron Sensitivity	1.5×10^{-17}	A/nv
Gamma Sensitivity	2.0×10^{-14}	A/R/Hr

Note

1. Saturation Voltage varies with neutron flux level.

Westinghouse Electric Corporation
Electronic Tube Division, Elmira, N.Y. 14902
Printed in U.S.A.

October 1967
Supersedes WL-23238 dated July 1967
S6-2D-11C, S5-11A, WI-800

In-Core Fission Chamber

Westinghouse

Up to 5 x 10^{14} nv
750° F Operation

Type: WL-23266
3 x 10^{20} nvt Life
4 x 10^{-18} A/nv Sensitivity

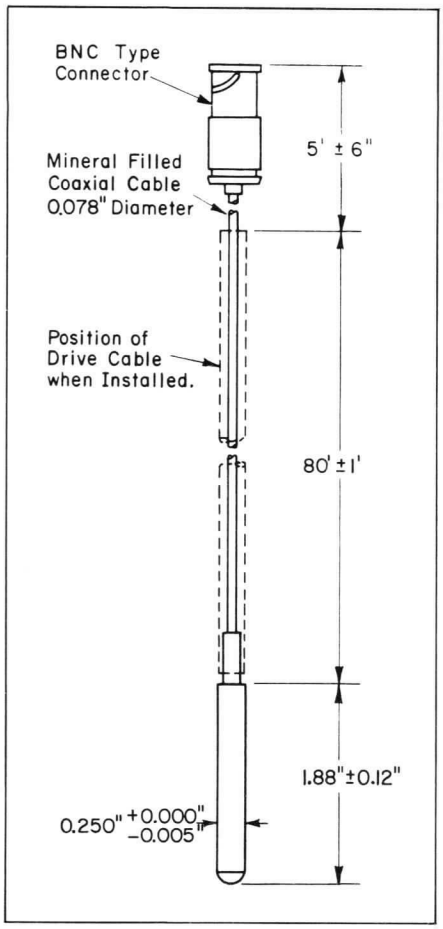

Application

The WL-23266 is a miniature fission chamber designed for in-core operation in thermal neutron flux levels up to 5 x 10^{14} neutrons/cm^2/second. The chamber is constructed of stainless steel with high purity alumina insulation and will operate in any position at ambient temperatures up to 750° F. The detector is provided with an integral coaxial cable with a stainless steel jacket and alumina insulation. The coaxial cable is designed to be located within a drive cable for use with a mechanical drive system. The WL-23266 has a neutron sensitivity of 4 x 10^{-18} amperes/neutron/cm^2/second and a gamma sensitivity of 1.5 x 10^{-14} amperes/roentgen/hour.

Mechanical

Diameter (Chamber)	0.250 + 0.000 −0.005 Inch
Length:	
Chamber	1.88 ± 0.12 Inch
Cable	85 Feet
Sensitive Length	1 Inch
Connector	BNC Type

Materials

Cable Sheath	Stainless Steel
Outer Case (Detector)	Stainless Steel
Inner Electrode	Stainless Steel
Insulation:	
Detector & Cable	Al_2O_3
Connector	Teflon
Neutron Sensitive Material:	
Content	U_3O_8 Enriched to 20% in U^{235}
Gas Filling	Helium

Impedance

Resistance (Minimum 70° F)	2 x 10^{10} Ohms
Resistance (Minimum 400° F)	1 x 10^{9} Ohms
Resistance (Minimum 750°F)	5 x 10^{7} Ohms
Capacitance (Detector Plus Cable) Approx.	3500 pF

Maximum Ratings

Voltage Between Electrodes	250 max. Volts
Temperature	750 max. °F
Thermal Neutron Flux	5 x 10^{14} max. nv
Gamma Flux	1 x 10^{9} max. R/Hr
Total Integrated Neutron Flux at 750° F for 10% Loss in Sensitivity	3.0 x 10^{20} nvt

Typical Operation

Operating Voltage (Note 1)	25 to 200 Volts
Thermal Neutron Flux (Note 2)	5 x 10^{14} nv
Thermal Neutron Sensitivity	4 x 10^{-18} A/nv
Gamma Sensitivity	1.5 x 10^{-14} A/R/Hr

Notes

1. Saturation voltage varies with neutron flux level.
2. Lower limit varies with temperature and gamma flux.

Westinghouse Electric Corporation
Electronic Tube Division, Elmira, N. Y. 14902
Printed in U. S. A.

November 1967
New Information
S6–2D–11C, S5–11A, WI–800

In-Core Ion Chamber

Westinghouse

Up to 5 x 10^{14} nv
750° F Operation

Type: WL-23267
4.1 x 10^{19} nvt Life
2 x 10^{-18} A/nv Sensitivity

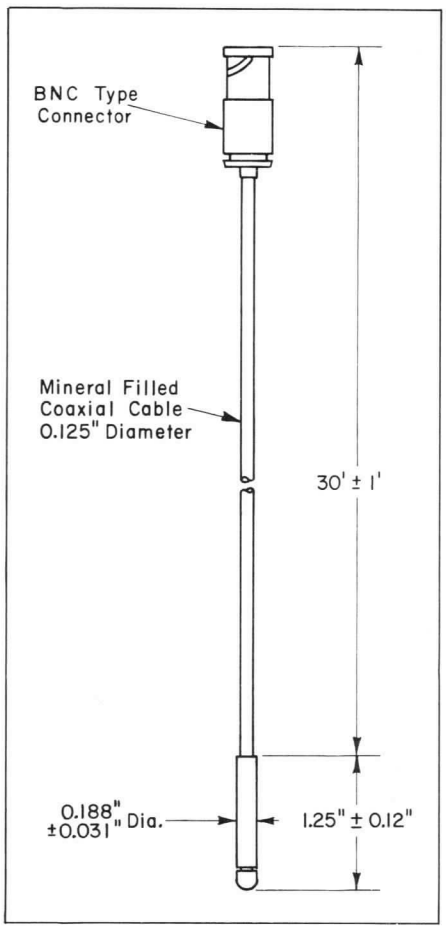

Application

The WL-23267 is a miniature ionization chamber designed to detect in-core thermal neutron fluxes up to 5 x 10^{14} neutrons/cm^2/second. The chamber is constructed of titanium with high purity alumina insulation and will operate in any position at ambient temperatures up to 750°F. The detector is provided with an integral 30 foot coaxial cable with a titanium jacket and alumina insulation. The WL-23267 has a neutron sensitivity of 2 x 10^{-18} amperes/neutron/cm^2/second and a gamma sensitivity of 1 x 10^{-14} amperes/roentgen/hour.

Mechanical

Detector Diameter	0.188 ± 0.031 Inch
Cable Diameter	0.125 Inch
Length:	
Body	1.25 ± 0.12 Inch
Cable	30 Feet
Sensitive Length	0.5 Inch
Connector	BNC Type

Materials

Cable Sheath	Titanium
Outer Case (Detector)	Titanium
Inner Electrode	Titanium
Insulation:	
Detector & Cable	Al_2O_3
Connector	Teflon
Neutron Sensitive Material:	
Content	Natural Boron
Thickness	1 mg/cm^2
Gas Filling	Helium

Impedance

Resistance (Minimum at 70° F)	2 x 10^{11} Ohms
Resistance (Minimum at 400° F)	2 x 10^{10} Ohms
Resistance (Minimum at 750° F)	2 x 10^{8} Ohms
Capacitance (Detector Plus Cable) Approx.	2000 pF

Maximum Ratings

Voltage Between Electrodes	250 max. Volts
Temperature	750 max. °F
Thermal Neutron Flux	5 x 10^{14} max. nv
Gamma Flux	1 x 10^{9} max. R/Hr
Total Integrated Neutron Flux at 750° F for 10% Loss in Sensitivity	4.1 x 10^{19} max. nvt

Typical Operation

Operating Voltage (Note 1)	25 to 200 Volts
Thermal Neutron Flux (Note 2)	5 x 10^{14} nv
Thermal Neutron Sensitivity	2 x 10^{-18} A/nv
Gamma Sensitivity	1 x 10^{-14} A/R/Hr

Notes

1. Saturation voltage varies with neutron flux level.
2. Lower limit varies with temperature and gamma flux.

Westinghouse Electric Corporation
Electronic Tube Division, Elmira, N. Y. 14902
Printed in U. S. A.

November 1967
New Information
S6–2D–11C, S5–11A, WI–800

Uncompensated Ionization Chamber

Westinghouse

Up to 10^{11} nv
300°F Operation

Type: WL-23282
1.4×10^{-13} A/nv Sensitivity
Guard Ring Construction

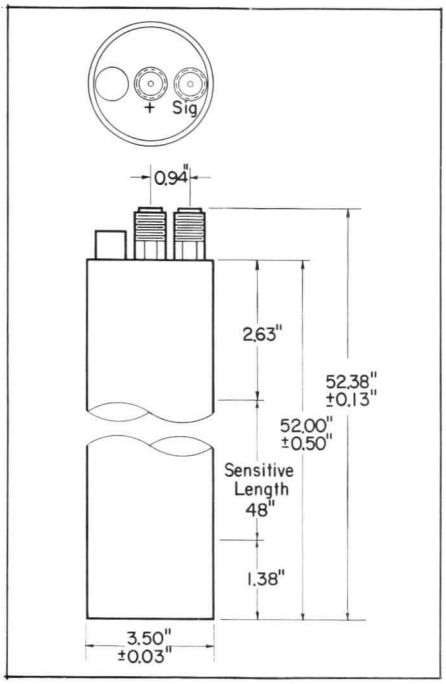

TYPICAL CONNECTION DIAGRAM

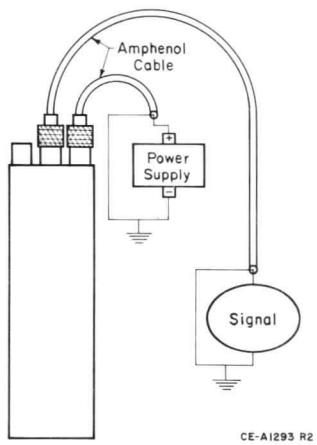

FIGURE 1

TYPICAL SATURATION CHARACTERISTICS

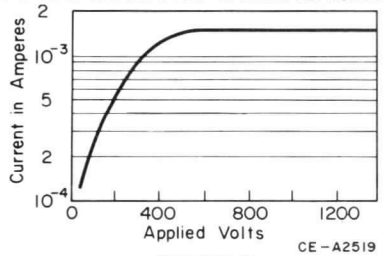

FIGURE 2

Application

The WL-23282 is a long ionization chamber designed to detect thermal neutrons in the range from 7.5 to 4.0×10^{10} neutrons/cm^2/second at a maximum temperature of 300 degrees F. The use of guard ring construction minimizes spurious signal current due to electrical leakage.

The length of the WL-23282 allows it to integrate the flux profile of a reactor core. This provides a more accurate indication of the flux level by reducing the effect of the shifts in the flux profile which occur during reactor operation.

The use of materials of low activation cross-section reduces the effect of artificial radioactivity. The case is 1100 aluminum; the electrodes are 3% aluminum, 97% magnesium alloy, and the insulation is alumina ceramic.

The thermal neutron sensitivity of the WL-23282 is approximately 1.4×10^{-13} amperes/neutron/cm^2/second. The gamma sensitivity is approximately 7.6×10^{-11} amperes/R/hour.

Mechanical

Maximum Diameter	3.53	Inches
Maximum Overall Length	52.50	Inches
Approximate Sensitive Length	48	Inches
Net Weight	30	Pounds
Shipping Weight	45	Pounds

Materials

Outer Case	1100 Aluminum
Electrodes	3% Aluminum, 97% Magnesium Alloy
Insulation	Stabilized Polystyrene
Neutron Sensitive Material	Boron Enriched in B-10
Thickness	1 mg/cm^2
Gas Filling	Nitrogen

Impedance

Resistance (Note 1)		
Signal Electrode to Case (minimum)	10^{13}	Ohms
H.V. Electrode to Case (minimum)	10^{12}	Ohms
Capacity (Note 2)		
Signal Electrode to Case	600	pF
H.V. Electrode to Case	800	pF

Maximum Ratings

Voltage Between Electrodes	1500 max.	Volts
Temperature	300 max.	°F
External Pressure (Note 3)	180 max.	Pounds/$Inch^2$
Thermal Neutron Flux	10^{11} max.	nv

Typical Operation (See Figure 1)

Operating Voltage (Note 4)	200 to 1000 Volts
Saturation Characteristics	Figure 2
Thermal Neutron Flux Range	7.5 to 4×10^{10} nv
Thermal Neutron Sensitivity (Approx.)	1.4×10^{-13} Amperes/nv
Gamma Sensitivity (Approx.)	7.6×10^{-11} Amperes/R/hr.

Notes

1. The detector may not be immersed directly in water and high humidity environments should be avoided as they will impair performance.
2. Capacitance is measured between an electrode and case with the other electrode grounded.
3. The pressurizing atmosphere must be dry and non-corrosive.
4. The voltage necessary to produce saturation varies with the neutron flux level. Either polarity may be used. See Figure 2.

Westinghouse Electric Corporation
Electronic Tube Division, Elmira, N. Y. 14902
Printed in U.S.A.

October 1967
New Information
S6–2D–11C, S5–11A, WI-800

Westinghouse

Prompt Self-Powered Detector

0.062″ Diameter
750° F Operation-WL-23283
480° F Operation-WL-23297

2.8×10^{20} nvt Life-WL-23283
10^{19} nvt Life-WL-23297
1.4×10^{-21} A/nv Sensitivity

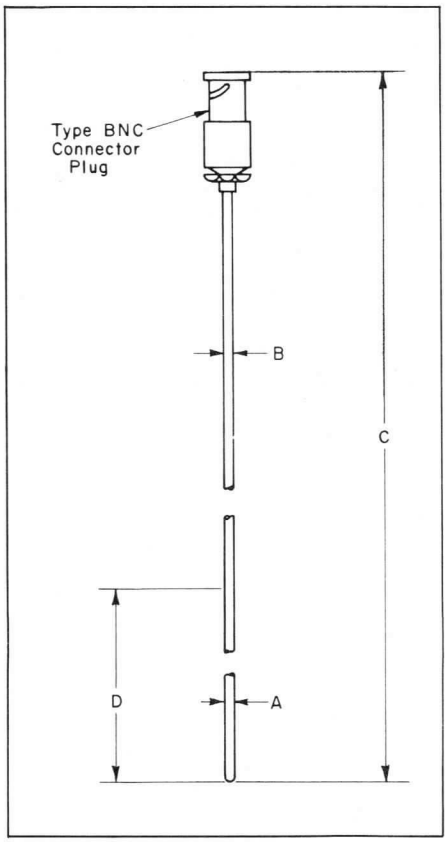

Application

This group of prompt self-powered neutron detectors require no external power supply and generate a signal which is directly proportional to the incident thermal neutron flux. The detection process is dependent upon the neutron activation of the emitter like the standard unit. However, in this case the current is the result of a flow of secondary electrons produced by the prompt gamma rays emitted from the nuclei upon neutron capture. The time for this reaction and the subsequent charge collection is approximately 10^{-10} seconds. Therefore, the time constant of the circuit becomes the limiting factor in the response time of the detector system.

Their operating characteristics make them ideal for flux monitoring especially in reactor test loops or for flux mapping. They consist of a stainless steel sheathed coaxial cable with a stainless steel center wire and magnesium oxide insulation. The neutron sensitive end of the cable is constructed of stainless steel with an emitter wire surrounded by magnesium oxide insulation. The thermal neutron sensitivity is approximately 1.4×10^{-21} amperes/neutron/cm^2/second.

Mechanical	Dim.	Units	WL-23283	WL-23297
Detector Diameter	A	Inch	0.062	0.062
Coaxial Cable Diameter	B	Inch	0.062	0.062
Coaxial Cable Length	C	Feet	16	16
Emitter Length	D	Inches	34	3
Connector		—	BNC, Type UG-260/U	BNC, Type UG-260/U
Materials				
Cable Sheath		—	Stainless Steel	Stainless Steel
Detector Case		—	Stainless Steel	Stainless Steel
Cable Insulation		—	Magnesium Oxide	Magnesium Oxide
Detector Insulation		—	Magnesium Oxide	Magnesium Oxide
Emitter Wire		—	Cobalt	Cadmium
Impedance				
Resistance (min. at 70°F)		Ohms	10^{12}	10^{12}
Resistance (min. at Rated Temp.)		Ohms	10^{8}	10^{8}
Capacitance		pF	3200	3200
Maximum Ratings				
Temperature		°F	480	750
Pressure		PSI	2000	2000
Thermal Neutron Flux		nv	10^{16}	10^{16}
Typical Operating Characteristics				
Thermal Neutron Sensitivity		A/nv	1.4×10^{-21}	1.4×10^{-21}
Polarity		—	Pos. on Cent. Cond.	Pos. on Cent. Cond.
Lifetime for 1% loss in sensitivity		nvt	2.8×10^{20}	10^{19}

Westinghouse Electric Corporation
Electronic Tube Division, Elmira, N. Y. 14902
Printed in U.S.A.

November 1967
New Information, Type WL-23283 supersedes type WX-30687
S6–2D–11C, S5–11A, WI–800

In-Core Fission Chamber

Westinghouse

Up to 3×10^{13} nv
650°F Operation

Type: WL-23284
2.8×10^{20} nvt Life
6.8×10^{-18} A/nv Sensitivity

Application

The WL-23284 is a miniature fission chamber designed for in-core operation in thermal neutron flux levels up to 3×10^{13} neutrons/cm^2/second. The chamber is constructed of stainless steel with high purity alumina insulation and will operate in any position at ambient temperatures up to 650°F. The detector is provided with an integral coaxial cable with a stainless steel jacket and alumina insulation. The WL-23284 has a neutron sensitivity of 6.8×10^{-18} amperes/neutron/cm^2/second and a gamma sensitivity of 1×10^{-14} amperes/roentgen/hour.

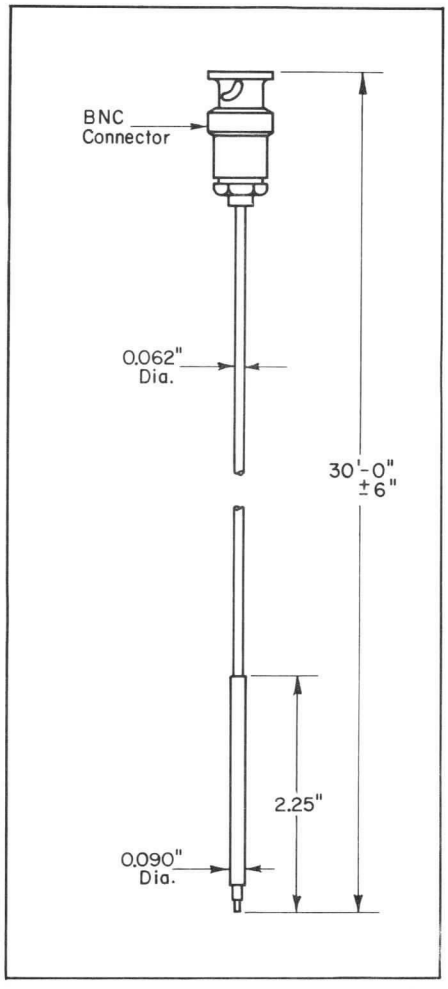

Mechanical

Diameter (Chamber)	0.090±0.001	Inch
Diameter (Cable)	0.062	Inch
Length:		
Chamber	2.25±0.12	Inch
Cable	30	Feet
Sensitive Length	1	Inch
Connector	BNC Type	

Materials

Cable Sheath	304 Stainless Steel
Outer Case (Detector)	304 Stainless Steel
Inner Electrode	Stainless Steel
Insulation (Detector and Cable)	Aluminum Oxide
Neutron Sensitive Material:	
Content	U_3O_8 Enriched to more Than 90% In U_{235}
Gas Filling	Helium

Impedance

Resistance (Minimum at 70°F)	10^{10}	Ohms
Resistance (Minimum at 650°F)	10^{8}	Ohms
Capacitance (Detector Plus Cable, Max.)	1500	pF

Maximum Ratings

Voltage Between Electrodes	300	max.	Volts
Temperature	650	max.	°F
Thermal Neutron Flux	3×10^{13}	max.	nv
Gamma Flux	1×10^{9}	max.	R/Hr
Total Integrated Neutron Flux at 650°F for 10% Loss in Sensitivity	2.8×10^{20}	max.	nvt

Typical Operation

Operating Voltage (Note 1)	25 to 300	Volts
Thermal Neutron Flux Range (Note 2)	3×10^{13}	nv
Thermal Neutron Sensitivity	6.8×10^{-18}	A/nv
Gamma Sensitivity	1×10^{-14}	A/R/Hr

Notes

1. Saturation Voltage varies with neutron flux level.
2. Lower limit varies with temperature and gamma flux.

October 1967
New Information
S6-2D-11C, S5-11A, WI-800

In-Core Fission Chamber

Up to 3×10^{13} nv
650°F Operation

Type: WL-23284
2.8×10^{20} nvt Life
6.8×10^{-18} A/nv Sensitivity

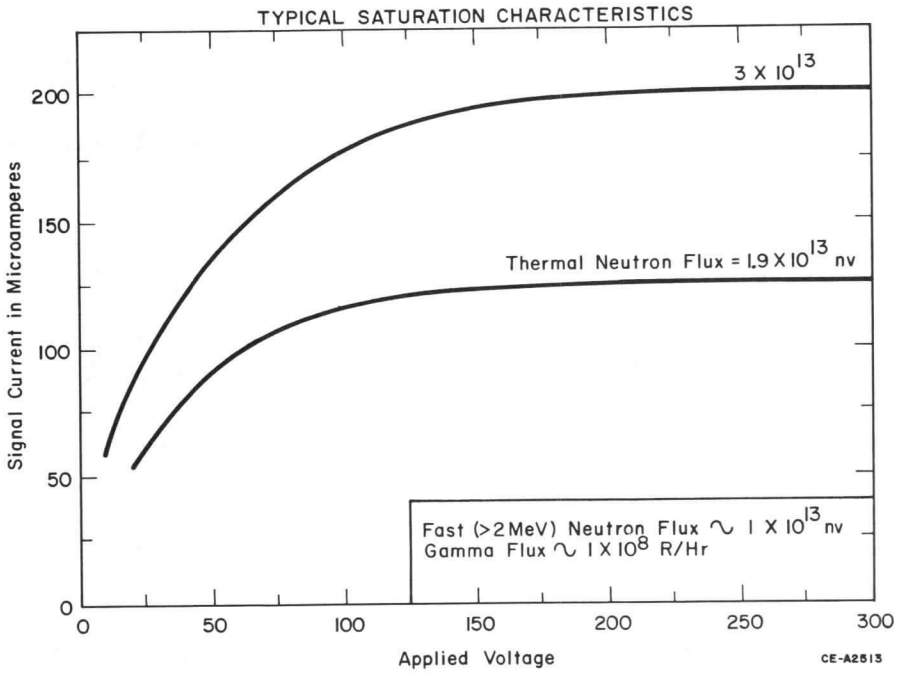

Westinghouse Electric Corporation
Electronic Tube Division, Elmira, N. Y. 14902
Printed in U. S. A.

Westinghouse

In-Core Fission Chamber

Up to 2×10^{14} nv
650°F Operation

Type: WL-23287
3.1×10^{21} nvt Life
3×10^{-18} A/nv Sensitivity

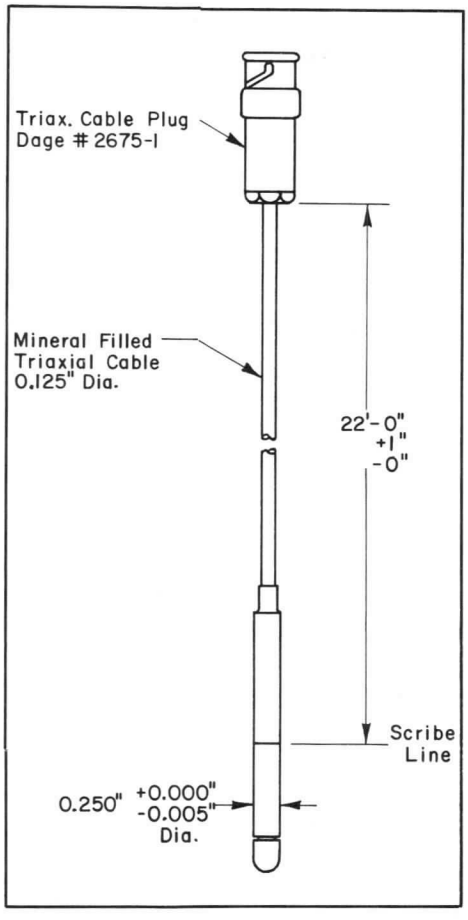

Application

The WL-23287 is a miniature fission chamber designed to detect in-core thermal neutron fluxes up to 2×10^{14} neutrons/cm²/second. The chamber is constructed of stainless steel with high purity alumina insulation and will operate in any position at ambient temperatures up to 650°F. The detector is provided with an integral 18 foot triaxial cable with a stainless steel jacket and alumina insulation. The neutron sensitive coating consists of a special breeder mixture of uranium isotopes to provide extended life over devices with pure U_{235} coatings.

The WL-23287 has a neutron sensitivity of 3×10^{-18} amperes/neutron/cm²/second and a gamma sensitivity of 2×10^{-14} amperes/roentgen/hour.

Mechanical

Detector Diameter	$0.250 \pm \frac{0.000}{0.005}$	Inch
Cable Diameter	0.125	Inch
Body Length	1.88 ± 0.12	Inch
Cable	22	Feet
Sensitive Length	1	Inch
Connector	Triax. Cable Plug, Dage #2675-1	

Materials

Cable Sheath	Stainless Steel
Outer Case (Detector)	Stainless Steel
Inner Electrode	Stainless Steel
Insulation:	
(Detector and Cable)	Aluminum Oxide
(Connector)	Teflon
Neutron Sensitive Material:	
Content	Breeder Mixture of 10% U-235 and 90% U-234
Gas Filling	Helium

Impedance

Resistance (Signal to Case Minimum at 70°F)	10^{12}	Ohms
Resistance (Signal to Guard Minimum at 70°F)	10^{12}	Ohms
Resistance (Signal to Case Minimum at 650°F)	5×10^{8}	Ohms
Resistance (Signal to Guard Minimum at 650°F)	5×10^{8}	Ohms
Capacitance (Detector Plus Cable) Approx.	1100	pF

Maximum Ratings

Voltage Between Electrodes	250	max.	Volts
Temperature	650	max.	°F
Thermal Neutron Flux	2×10^{14}	max.	nv
Gamma Flux	1×10^{9}	max.	R/Hr.

Typical Operation

Operating Voltage (Note 1)	25-150	Volts
Thermal Neutron Flux (Note 2)	2×10^{14}	nv
Thermal Neutron Sensitivity	3×10^{-18}	A/nv
Gamma Sensitivity	2×10^{-14}	A/R/Hr.
Total Integrated Neutron Flux at 650°F for 10% Loss in Sensitivity	3.1×10^{21}	nvt

Notes

1. Saturation voltage varies with neutron flux level.
2. Lower limit varies with temperature and gamma flux.

Westinghouse Electric Corporation
Electronic Tube Division, Elmira, N. Y. 14902
Printed U.S.A.

October 1967
Supersedes WX-30626 dated July 1967
S6-2D-11C, S5-11A, WI-800

Compensated Ionization Chamber

Westinghouse

Up to 10^{11} nv
175°F Operation

Type: WL-23191
1.4×10^{-13} A/nv Sensitivity
For Reactor Core Flux Profile Integration

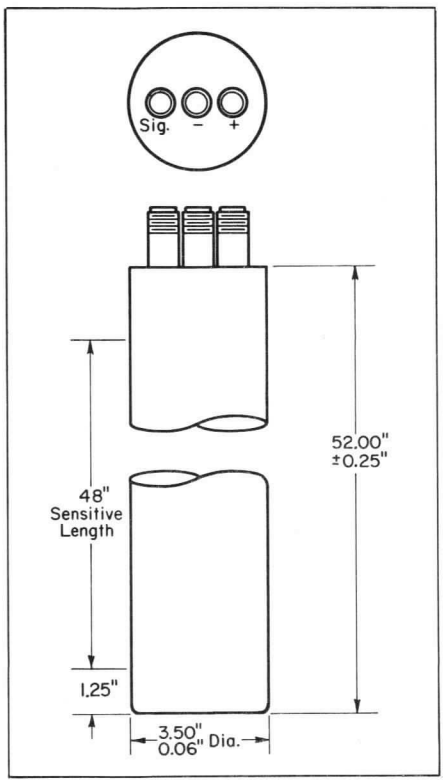

Application

The WL-23191 is a long ionization chamber designed to detect thermal neutrons at flux levels from 7.5×10^{1} to 4.0×10^{10} neutrons/cm^2/ second in the presence of very high gamma radiation fields.

The WL-23191 is designed to integrate the flux profile of a reactor core. By integrating the flux profile, variations in the chamber signal, caused by the flux profile shifts which occur in reactor operation, are reduced.

The chamber is constructed of materials of low activation cross-section to reduce the amount of artificial radioactivity produced in the device. The case is 1100 aluminum; the electrodes are 3% aluminum, 97% magnesium alloy, and the insulation is cross-linked polystyrene.

The thermal neutron sensitivity of the WL-23191 is approximately 1.4×10^{-13} amperes/neutron/cm^2/second. The gamma sensitivity is approximately 7.6×10^{-11} amperes/R/hour.

Mechanical

Diameter	3.50 ± 0.06	Inches
Overall Length	53.5 ± 0.25	Inches
Approximate Sensitive Length	48	Inches
Net Weight	20	Pounds
Shipping Weight	35	Pounds

Materials

Outer Case	1100 Aluminum
Electrodes	3% Aluminum, 97% Magnesium Alloy
Insulation	Stabilized Polystyrene
Neutron Sensitive Material:	
Content	Boron Enriched in B^{10}
Thickness	1 Mg/cm^2
Gas Filling	Nitrogen

Impedance

Resistance:		
Signal Electrode to Case (minimum)	10^{13}	Ohms
H.V. Electrode to Case (minimum)	10^{12}	Ohms
Compensating Electrode to Case (minimum)	10^{12}	Ohms
Capacitance: (Note 1)		
Signal Electrode to Case Approx.	825	pF
H.V. Electrode to Case Approx.	792	pF
Compensating Electrode to Case Approx.	375	pF

Maximum Ratings

Voltage Between Electrodes	1500 max.	Volts
Temperature	175 max.	°F
External Pressure (Note 2)	180 max.	PSI
Thermal Neutron Flux	1×10^{11} max.	nv

Typical Operation

Operating Voltage	300 to 1200	Volts
Saturation	See Figure 1	
Thermal Neutron Sensitivity	1.4×10^{-13}	Amperes/nv
Gamma Sensitivity	7.6×10^{-11}	Amperes/R/hr

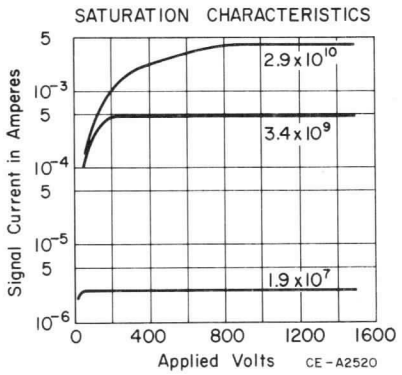

FIGURE 1

Notes

1. Measurements made with remaining connectors shorted to ground.
2. The pressurizing atmosphere must be dry and non-corrosive.

Westinghouse Electric Corporation
Electronic Tube Division, Elmira, N. Y. 14902
Printed in U.S.A.

October 1967
New Information
S6–2D–11C, S5–11A, WI–800

QUICK REFERENCE GUIDE

86-509

MAGNETRONS

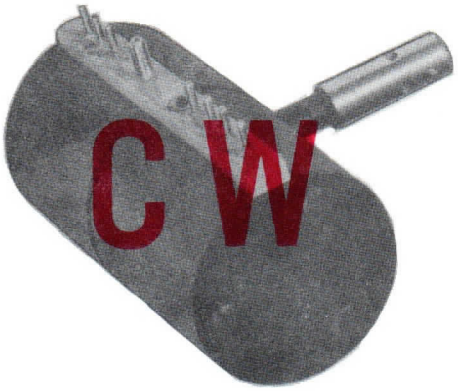

CW

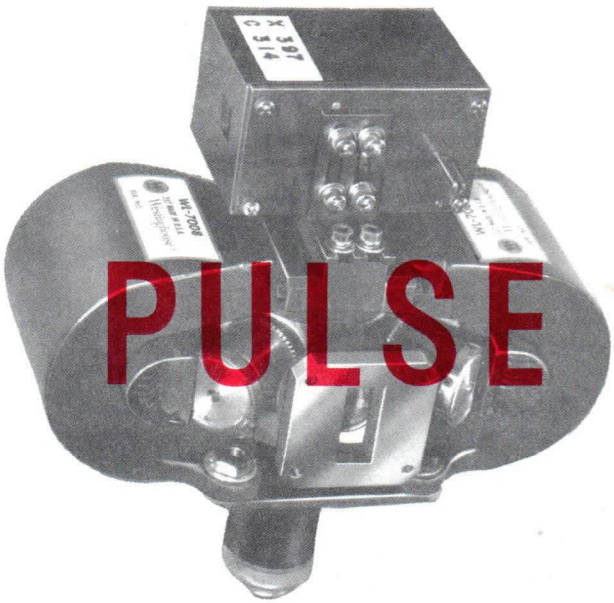

PULSE



COAXIAL

NEW INFORMATION
NOVEMBER 1964

WESTINGHOUSE ELECTRIC CORP.
ELECTRONIC TUBE DIVISION
ELMIRA, NEW YORK

Westinghouse

CW MAGNETRONS

TUBE TYPE	BAND	FREQ. GC.	POWER KW	VOLTAGE KV	CURRENT AMP.	DUTY	WEIGHT POUNDS	TUNED	APPLICATIONS & FEATURES
WL-6177A	C	4.3	0.001	0.3	0.03	CW	1	Fixed	FM Altimeter
WX-4529	C	4.3	0.001	0.3	0.03	CW	1	Fixed	FM Altimeter (3-Pin Base & Type N Output)
WL-7794	C	4.2 to 4.4	0.001	0.3	0.03	CW	1	Hand	Communications and Telemetry
WL-7795	C	4.3	0.001	0.3	0.03	CW	1	Fixed	Communication and Telemetry
WL-7796	C	4.2 to 4.4	0.001	0.3	0.03	CW	1	Elect.	FM Altimeter

PULSED MAGNETRONS

WL-7794	C	4.2 to 4.4	0.1	0.8	0.05	0.01	1	Hand	Communications and Telemetry
WL-103	X	9.31 to 9.34	0.12	0.8	0.55	0.027	1	Hand	Waveguide Tuner
WL-142	X	9.34 to 9.37	0.12	0.8	0.55	0.027	1	Hand	Waveguide Tuner
WL-143	X	9.37 to 9.4	0.12	0.8	0.55	0.027	1	Hand	Waveguide Tuner
WL-6249B	X	8.5 to 9.6	250	28	25	0.001	16.25	Servo	Pin Tuner
WL-193	X	8.5 to 9.6	250	28	25	0.001	16.25	Servo	Pin Tuner, Low FM-ing
WL-7008	X	8.5 to 9.6	200	22	27.5	0.001	13	Servo	Coupled-Cavity Tuner
WL-7008A	X	8.5 to 9.6	200	22	27.5	0.0015	13	Servo	Ceramic Version of WL-7008
WL-7111	X	8.5 to 9.6	200	22	27.5	0.001	12	Hand	Coupled-Cavity Tuner
WL-7111A	X	8.5 to 9.6	200	22	27.5	0.001	12	Hand	Ceramic Version of WL-7111
WL-6865A	X	8.5 to 9.6	200	22	27.5	0.001	12	Hand	Recommended for Replacement
WL-7541	X	8.5 to 9.6	250	22	27.5	0.011	12	Hand	Ruggedized, Coupled-Cavity Tuner
WX-4742	X	8.5 to 9.6	200	22	27.5	0.001	12	Hand	Electrical Step Tuning (40 Mc. Max.)
WX-30237	X	9.3 to 9.45	200	20	22	0.001	12	Hand	Pulse Compression, 30 Mc. Pulling
WX-3737	X	8.5 to 9.6	400 600	31 32	30 45	0.001 0.0005	16.25	Servo	Pin Tuner, Component Testing
WX-30340	X	9.0 to 10.0	300	22	32	0.001	13	Servo	Coupled-Cavity Tuner

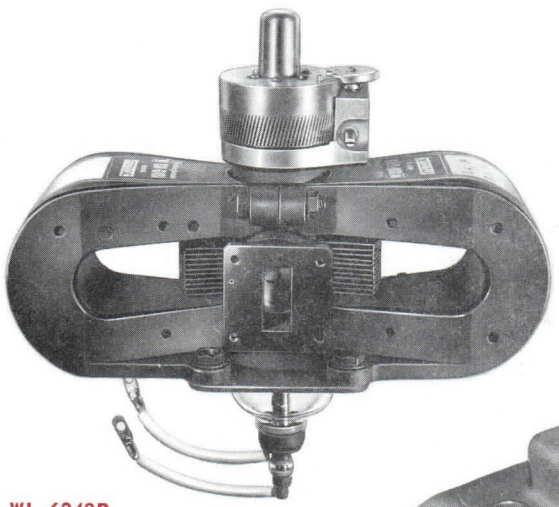

WL-6249B
WL-193

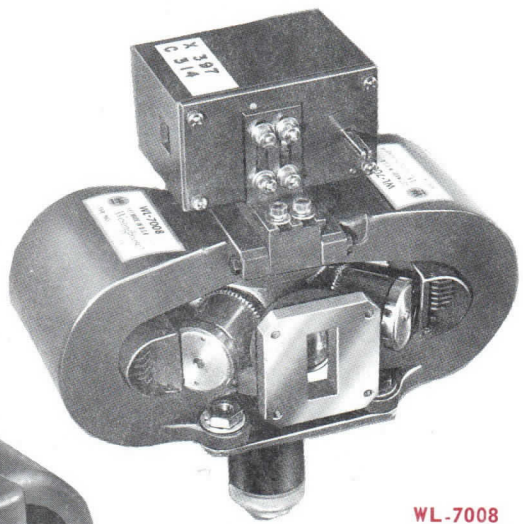

WL-7008
WL-7008A

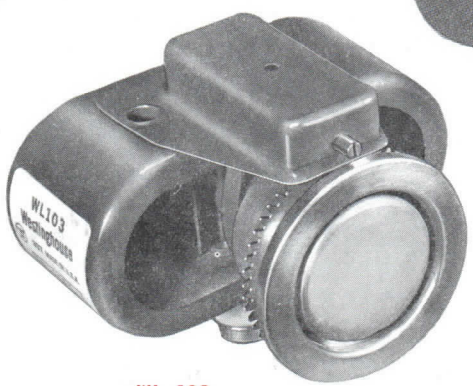

WL-103
WL-142
WL-143

Westinghouse

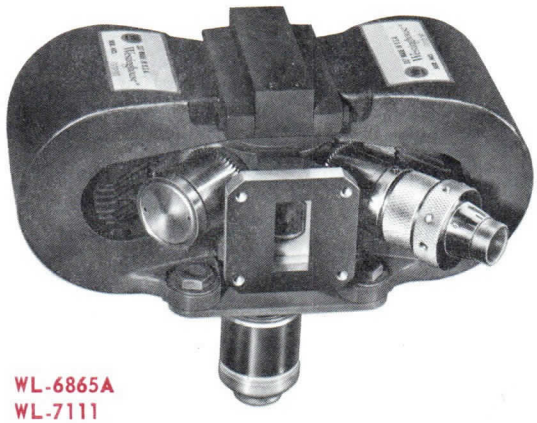

WL-6865A
WL-7111
WL-7111A
WL-7541
WX-4742
WX-30237

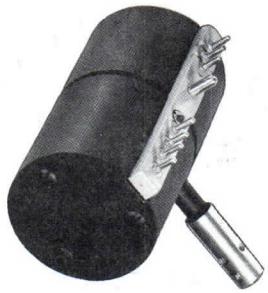

WL-6177
WL-7794
WL-7795
WL-7796
WX-4529



WX-3737

COAXIAL MAGNETRONS

TUBE TYPE	BAND	FREQ. GC.	POWER KW	VOLTAGE KV	CURRENT AMP.	DUTY	WEIGHT POUNDS	TUNED	APPLICATIONS & FEATURES
WX-22762	X	8.5 to 9.6	65	15	15	0.002	6.1	Servo	Replaces type 6543
WX-5457	X	8.5 to 9.6	250	28	25	0.001	14	Servo	Replaces types 6249B and 1122
WX-4700	X	8.5 to 9.6	200	22	27.5	0.001	14	Servo	Replaces type 7008
WX-30365	X	9.0 to 10.0	65	15	15	0.002	6.1	Servo	—
WX-30247	X	10.05 to 10.2	250	22	27.5	0.001	14	Servo	—
WX-30364	Ku	16.5	35	12	12	0.001	3.75	Fixed	May be either Forced-Air or Conduction Cooled
WX-30153	Ku	16.5	65	16	16	0.001	4.75	Fixed	May be either Forced-Air or Conduction Cooled
WX-30363	Ku	16.5	100	17.5	17.5	0.001	5.25	Fixed	May be either Forced-Air or Conduction Cooled

COAXIAL MAGNETRONS – Coaxial magnetrons are a new design of magnetron which is inherently superior in performance to previous designs such as the rising-sun or strapped-vane anode types. The COAXIAL magnetron has a pulling figure a factor of six better, a pushing figure a factor of ten better and a greater thermal time constant than conventional magnetrons.

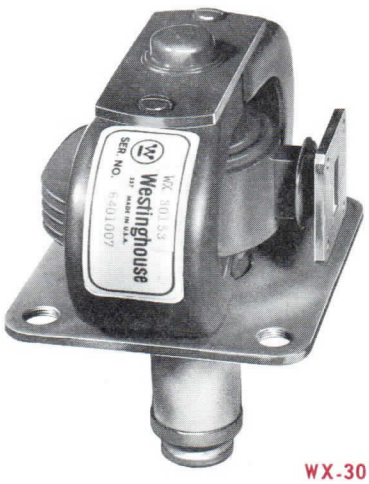

WX-30153

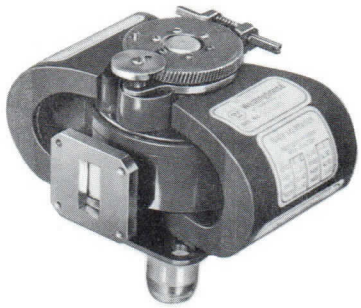

WX-22762
WX-30365

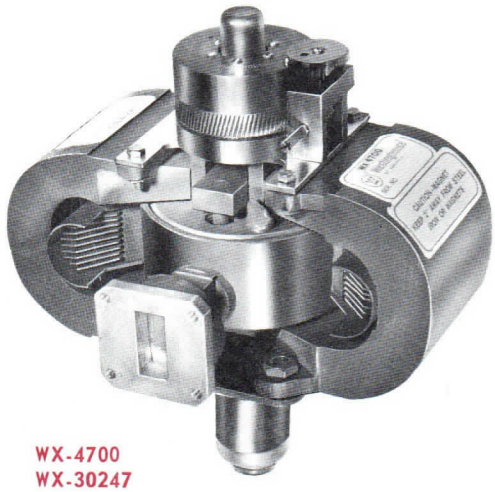

WX-4700
WX-30247



PRINTED IN U.S.A.

REFLEX

KLYSTRONS

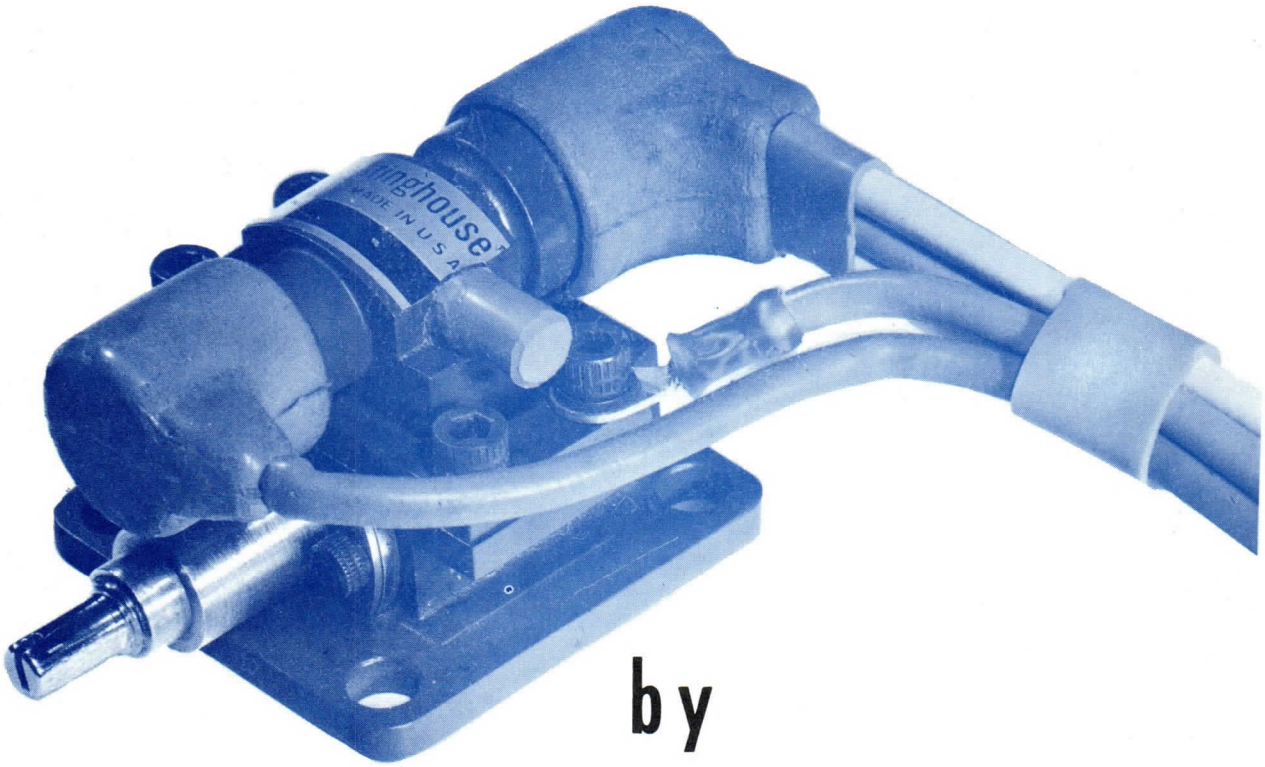

by

Westinghouse

WESTINGHOUSE ELECTRONIC TUBE DIVISION
ELMIRA NEW YORK

QUICK KLYSTRON SELECTOR

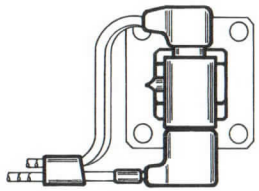

FIXED FREQUENCY
A

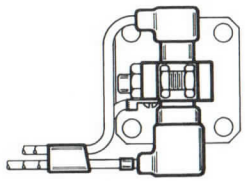

FIXED FREQUENCY TRIMMABLE
B

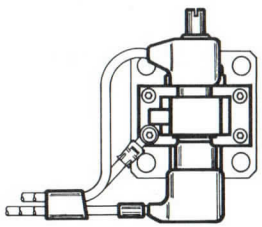

WAVEGUIDE TUNED
C

WESTINGHOUSE TUBE TYPE	FREQUENCY KMC	POWER OUTPUT MILLIWATTS Nominal	BEAM VOLTAGE Vdc	BEAM CURRENT Idc	REFLECTOR VOLTAGE Vdc	BANDWIDTH MC Nominal	ILLUSTRATION	SIMILAR TUBE TYPES
FIXED FREQUENCY TYPES								
WL-109	8.5-11.0	55	300	35	−150	40	A-E	BL-843, SRX-262
WL-176	8.5-11.0	55	300	35	−150	40	A-G	VA-218B
FIXED FREQUENCY with ± 50MC TRIMMING								
WL-177	8.5-11.0	725	500	55	−315	55	B-E	VA-242, BL-841, BL-829
WL-186	8.5-11.0	80	300	30	−320	55	B-G	VA-249
WL-119	11.0-14.0	450	500	55	−295	58	B-E	VA-246
TUNABLE TYPES								
WL-107	7.5-11.0	180	500	55	−100 to −600	45	D-G-I	–
WL-113	7.5-11.0	180	500	55	−100 to −600	45	D-E-I	–
WL-121	7.5-11.0	180	500	55	−100 to −600	45	D-G-L	X13B
WL-128	8.1-12.4	180	500	55	−100 to −600	45	D-G-I	–
WL-114	8.1-12.4	180	500	55	−100 to −600	45	D-E-I	–
WL-122	8.1-12.4	180	500	55	−100 to −600	45	D-G-L	X13, MXK26
WL-6781	8.5-10.0	23-22	200	17.5	−85 to −150	30	D-F-J	BL-803, MXK-1, SRX-232
WL-6780	8.5-10.0	23-22	200	17.5	−85 to −150	30	D-F-K	BL-800
WL-6316	8.5-10.0	23-22	200	17.5	−85 to −150	30	D-F-K	BL-800A, MXK-18

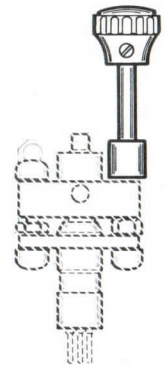

TUNING KNOB
N

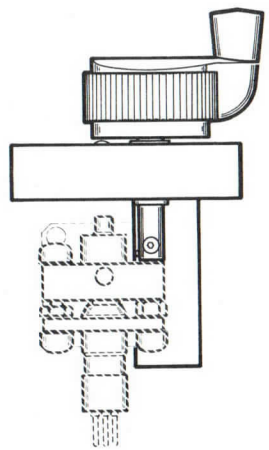

16-to-1 TUNER DRIVE
M

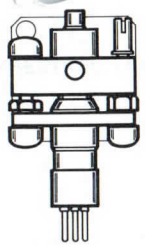

CAVITY TUNED
D

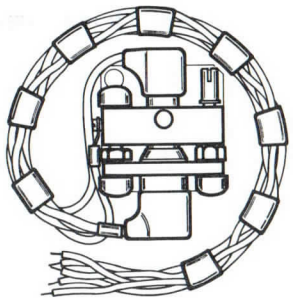

FLYING LEADS
E

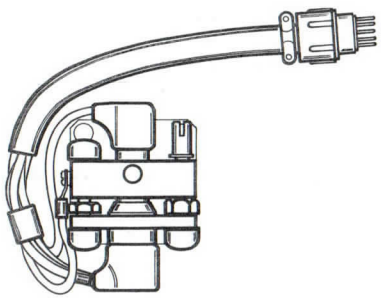

FLEXIBLE LEADS & CONNECTOR
F

WL-6312	8.5-10.0	75-93	300	27	−110 to −190	40	D-E-I	V-270, MXK-15
WL-6915	8.5-10.0	75-93	300	27	−110 to −190	40	D-F-I	–
WL-6310	8.5-10.0	75-93	300	27	−110 to −190	40	D-G-I	V-260, MXK-14
WL-187 *	8.5-10.0	85-112	350	48	−155 to −285	50	D-G-I	V-262
WL-188	8.5-10.5	85-112	350	48	−115 to −215	50	D-F-J	BL-807
WL-189	8.5-10.0	350-250	500	50	−330 to −440	40	D-G-J	BL-806
WL-6315	8.5-10.0	60-90	250	30	−60 to −120	55	D-E-I	V-153
WL-138	8.5-10.0	60-90	250	30	−60 to −120	55	D-G-I	V-157
WL-6314	8.5-10.5	110-210	350	45	−105 to −190	75	D-E-K	V-290, MXK-16
WL-191	8.5-10.0	550-750	500	60	−260 to −425	50	D-G-I	V-58C
WL-115	8.5-10.0	650	500	60	−260 to −500	50	D-E-I	–
WL-192	9.2-10.0	225	350	39	−220 to −280	38	C-E-H	VA-232
WL-110	12.4-14.5	220	600	58	−150 to −400	50	D-G-I	–
WL-116	12.4-14.5	220	600	58	−150 to −400	50	D-E-I	–
WL-123	12.4-14.5	220	600	58	−150 to −400	50	D-G-L	VA92B
WL-108	12.4-18.0	120	600	55	−150 to −600	50	D-G-I	–
WL-117	12.4-18.0	120	600	55	−150 to −600	50	D-E-I	–
WL-124	12.4-18.0	120	600	55	−150 to −600	50	D-G-L	X12
WL-111	14.0-17.5	100	600	55	−250 to −600	50	D-G-I	–
WL-118	14.0-17.5	100	600	55	−250 to −600	50	D-E-I	–
WL-126	14.0-17.5	100	600	55	−250 to −600	50	D-G-L	VA92

TUNING ACCESSORIES

WL-22669	16-to-1 tuner drive for use with Westinghouse slotted shaft bench oscillator reflex klystrons.	M
WL-22670	Tuning knob for use with Westinghouse slotted shaft bench oscillator reflex klystrons.	N

* Gold plated surfaces.

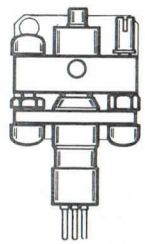

TOP CAP & BASE
G

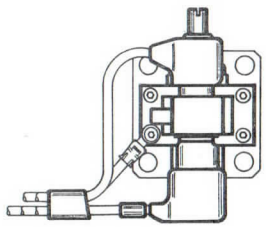

SINGLE SCREW SLOTTED SHAFT
H

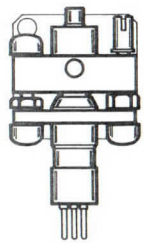

DIFF. SCREW SLOTTED SHAFT
I

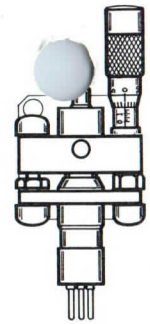

MICROMETER BARREL
L

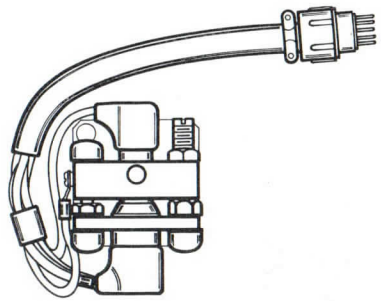

DIFFERENTIAL SCREW LOCK NUT
K

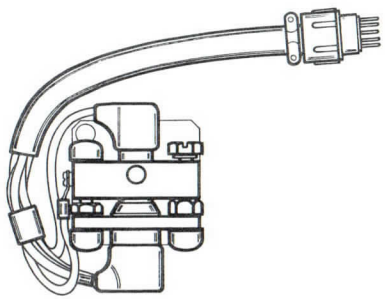

DIFFERENTIAL SCREW HEX. HEAD
J

Electronic Components Sales Offices

WEST COAST

City and State	Address	Phone
Arcadia, Cal.	129 So. First Avenue	HI 6-4411
Compton, Cal.	18020 So. Santa Fe Avenue	NF 8-7781
Los Angeles, Cal.	600 St. Paul Avenue	HU 2-9660
Phoenix, Arizona	1102 N. 21st Ave., Box 6144	254-5231
Portland, Oregon	1414 N.E. Grand Ave., Box 7965	AT 8-6311
Salt Lake City, Utah	1680 So. Redwood Road	EL 5-3413
San Diego, Cal.	1365 Sixth Avenue	BE 4-4651
San Francisco, Cal.	410 Bush Street	EX 2-5353
Seattle, Washington	3451 E. Marginal Way, South	MA 2-0808
Sunnyvale, Cal.	Bldg. 73, Hendy Avenue	RE 9-5840 — 9-8507
Van Nuys, Cal.	15217 Burbank Blvd.	ST 2-9823

MIDWEST

Chicago, Ill.	Merchandise Mart Plaza, Box 3426	WH 4-3860
Dallas, Texas	1232 Fidelity Union Life Bldg., 1511 Bryan St.	RI 8-0711
Denver, Colo.	55 West Fifth Avenue	KE 4-8121
Detroit, Mich.	5757 Trumbull Avenue	TR 2-7010
Houston, Texas	507 Dallas Avenue	224-7791
Indianapolis, Ind.	1560 Stadium Drive	ME 2-3301
Kansas City, Mo.	Mulberry at 13th Street	HA 1-7122
Milwaukee, Wis.	538 N. Broadway	BR 6-1800
Minneapolis, Minn.	3501 S. Highway 100	WA 7-6551
New Orleans, La.	400 N. Carrollton Ave., Box 19657	486-6141
Rockford, Ill.	2121 15 St.	398-3591
St. Louis, Mo.	411 N. 7th St.	GA 1-6911
Tulsa, Oklahoma	703 Enterprise Bldg.	DI 3-3191

EAST

Atlanta, Ga.	1299 Northside Dr., N.W., Box 4808	TR 4-1642
Baltimore, Md.	501 St. Paul Place	PL 2-0300
Bluefield, W. Va.	704 Bland St., Box 4295	325-7215
Boston, Mass.	10 High Street	LI 2-0600
Bridgeport, Conn.	540 Grant Street	ED 4-5161
Buffalo, N.Y.	Ellicott Square Building	TL 4-3966
Charlotte, N.C.	2001 W. Morehead St.	FR 7-3471
Cincinnati, Ohio	Gwynne Building	421-2250
Cleveland, Ohio	Illuminating Bldg., 55 Public Square	CH 1-7600
Columbus, Ohio	940 Williams Avenue	BR 9-7311
Dayton, Ohio	32 No. Main St.	BA 6-2511
Erie, Penn.	1007 Hess Ave., Box 2003	GL 2-4867
Hartford, Conn.	119 Ann Street	CH 6-5441
Huntsville, Ala.	220 Elec. Serv. Ctr., 112-118 Gallatin St.	JE 4-6447
Johnson City, N.Y.	4301 Old Vestal Rd., Box 148	RA 9-2258
Mineola, N.Y.	1501 Franklin Ave.	CH 8-9800
Newark, N.J.	1180 Raymond Blvd.	HU 4-3000
New York, N.Y.	40 Wall St.	WH 3-4321
Olean, N.Y.	Exchange Natl. Bk. Bldg., 201 N. Union St.	OLean 2-2184
Orlando, Fla.	367 N. Orange Ave., Box 1826	241-2091
Philadelphia, Penn.	3001 Walnut St.	EV 2-1200
Pittsburgh, Penn.	306 Fourth Ave., Box 1017	EX 1-2800
Red Bank, N.J.	Hamilton Bldg., 43 W. Front St.	SH 7-5800
St. Petersburg, Fla.	Component Sales Corp., Box 9545	360-7460
Springfield, Mass.	160 Tapley St., Box 1611	RE 6-8373
Tampa, Fla.	4062 Henderson Blvd., Box 10597	253-0114
Washington, D.C.	1625 K St., N.W.	NA 8-8843
Winston-Salem, N.C.	Box 5463, Ardmore Station	724-5321

PRINTED IN U.S.A.

REFLEX KLYSTRON TYPE WL-107
7.5 to 11.0 Gc.

The WL-107 is an integral cavity, single screw tuned, reflex klystron, tunable from 7.5 to 11.0 Gc., designed for service in signal generator and laboratory type applications where ease of tuning is required.

MECHANICAL

Net Weight	7 Ounces
Cooling	Forced air required above 10 watts resonator power input.
Connection:	
Base	3 Pin Pee Wee (JEDEC A3-1)
Reflector	Miniature Cap (JEDEC C1-4)
Mounting	Mates with UG 39/U
Tuner	Single Screw, Slotted Shaft

ELECTRICAL

Cathode	Coated Unipotential	
Heater:		
Voltage	6.3	Volts
Current	1.2	Amperes
Frequency	Tunable from 7.5 to 11.0 Gc.	

MAXIMUM RATINGS (Note 1)
Absolute Maximum Values

Beam Voltage	550	max.	Volts
Reflector Voltage	−10 to −1000	max.	Volts
Heater Voltage	7.0	max.	Volts
Cathode Current	65	max.	Ma.
Body Temperature	200	max.	°C

TYPICAL OPERATION AT 7.5 Gc.

Resonator Volts = 500	Min.	Ave.	Max.	
Power Output (Matched Load)	50	130	–	mW.
Electronic Tuning Range	–	40	–	Mc.
Beam Current	–	50	60	Ma.
Reflector Voltage	–	−240	–	Volts
Heater Current	1.08	1.20	1.32	Amperes

TYPICAL OPERATION AT 9.5 Gc.

Resonator Volts = 500	Min.	Ave.	Max.	
Power Output (Matched Load)	180	300	–	mW.
Electronic Tuning Range	–	50	–	Mc.
Beam Current	–	50	60	Ma.
Reflector Voltage	–	−210	–	Volts
Heater Current	1.08	1.20	1.32	Amperes

TYPICAL OPERATION AT 11.0 Gc.

Resonator Volts = 500	Min.	Ave.	Max.	
Power Output (Matched Load)	100	120	–	mW.
Electronic Tuning Range	–	50	–	Mc.
Beam Current	–	50	60	Ma.
Reflector Voltage	–	−180	–	Volts
Heater Current	1.08	1.20	1.32	Amperes

NOTE

1. The given Maximum Ratings must not be exceeded if performance characteristics are to be maintained. All Maximum Ratings may not always be applied simultaneously.

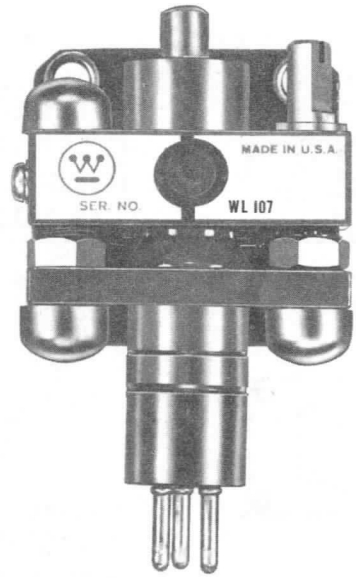

ACTUAL SIZE

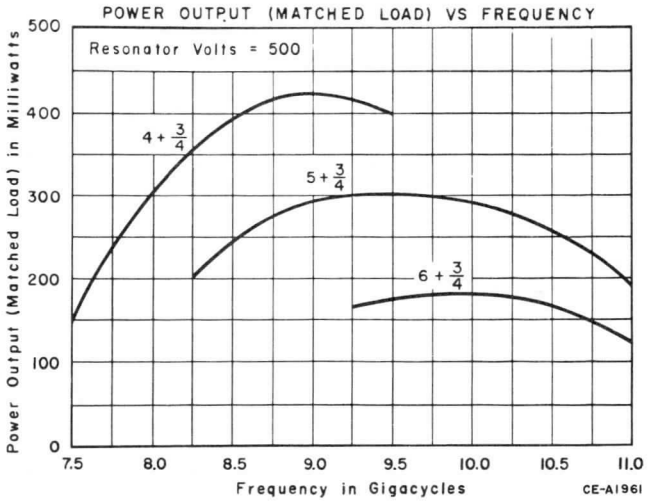

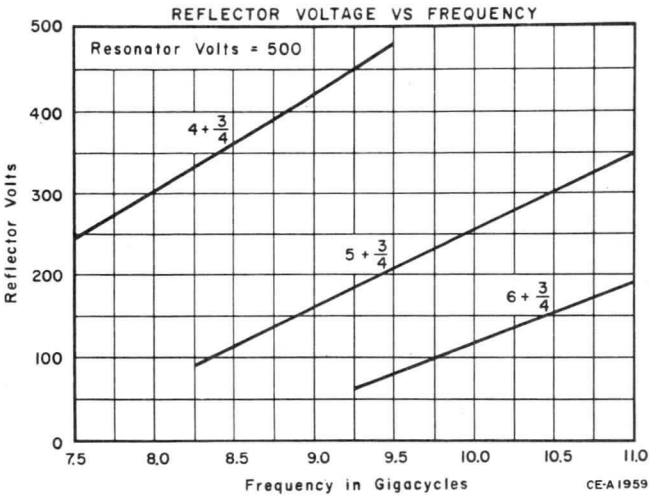

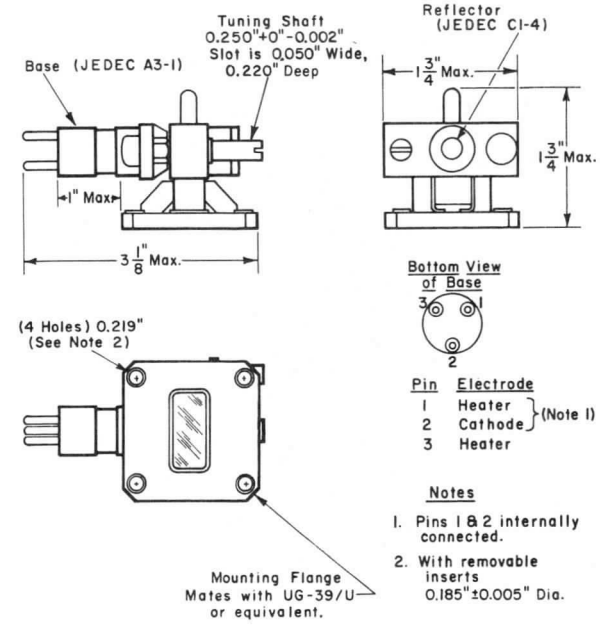

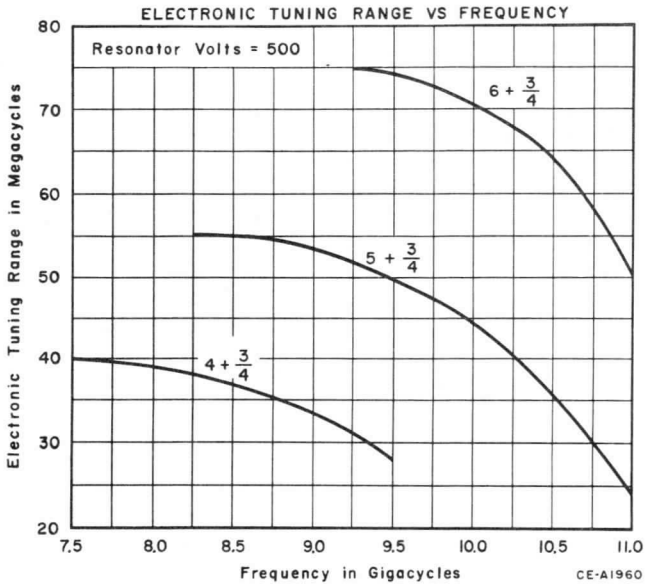

The information contained herein is supplied without assuming responsibility for infringement of patents or other rights of third parties which may result from its use. No license is granted by implication or otherwise under any patent or patent rights of Westinghouse Electric Corporation.

April 15, 1964

REFLEX KLYSTRON TYPE WL-108
12.4 to 18.0 Gc.

The WL-108 is an integral cavity, single screw tuned, reflex klystron, tunable from 12.4 to 18.0 Gc., designed for service in signal generator and laboratory applications where ease of tuning is required.

MECHANICAL

Net Weight (Approx.)	7 Ounces
Cooling	Forced air required above 10 watts resonator power input.
Connection:	
Base	3 Pin Pee Wee (JEDEC A3-1)
Reflector	Miniature Cap (JEDEC C1-4)
Mounting	Mates with UG 419/U Flange
Tuner	Single Screw

ELECTRICAL

Cathode	Coated Unipotential	
Heater:		
Voltage	6.3	Volts
Current	0.45	Amperes
Frequency	Tunable from 12.4 to 18.0 Gc.	

MAXIMUM RATINGS (Note 1)

Absolute Maximum Values

Beam Voltage	625	max.	Volts
Reflector Voltage	−10 to −1000	max.	Volts
Heater Voltage	7.0	max.	Volts
Cathode Current	70	max.	Ma.
Body Temperature	200	max.	° C

TYPICAL OPERATION AT 12.4 Gc.

Resonator Volts = 600	Min.	Ave.	Max.	
Power Output (Matched Load)	25	150	–	mW.
Electronic Tuning Range	–	90	–	Mc.
Beam Current	–	60	70	Ma.
Reflector Voltage	–	−200	–	Volts
Heater Current	0.40	0.45	0.50	Amperes

TYPICAL OPERATION AT 15.0 Gc.

Resonator Volts = 600	Min.	Ave.	Max.	
Power Output (Matched Load)	–	240	–	mW.
Electronic Tuning Range	–	150	–	Mc.
Beam Current	–	60	70	Ma.
Reflector Voltage	–	−230	–	Volts
Heater Current	0.40	0.45	0.50	Amperes

TYPICAL OPERATION AT 17.5 Gc.

Resonator Volts = 600	Min.	Ave.	Max.	
Power Output (Matched Load)	25	150	–	mW.
Electronic Tuning Range	–	45	–	Mc.
Beam Current	–	60	70	Ma.
Reflector Voltage	–	−300	–	Volts
Heater Current	0.40	0.45	0.50	Amperes

NOTE

1. The given Maximum Ratings must not be exceeded if performance characteristics are to be maintained. All Maximum Ratings may not always be applied simultaneously.



ACTUAL SIZE

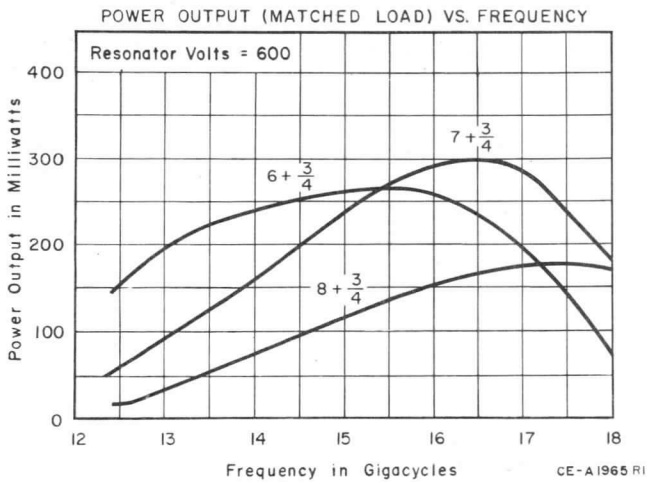

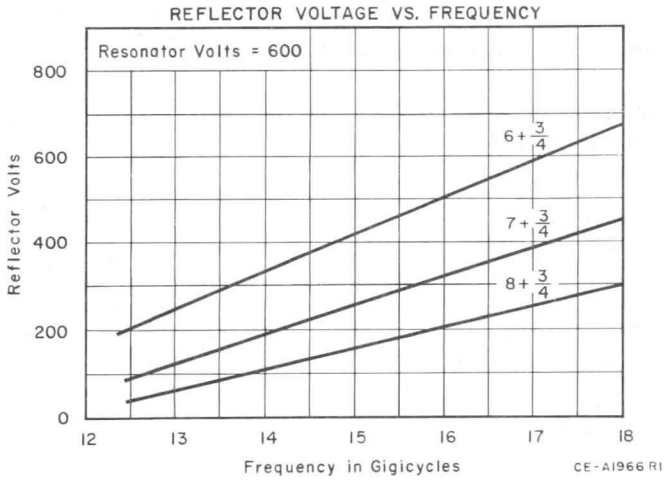

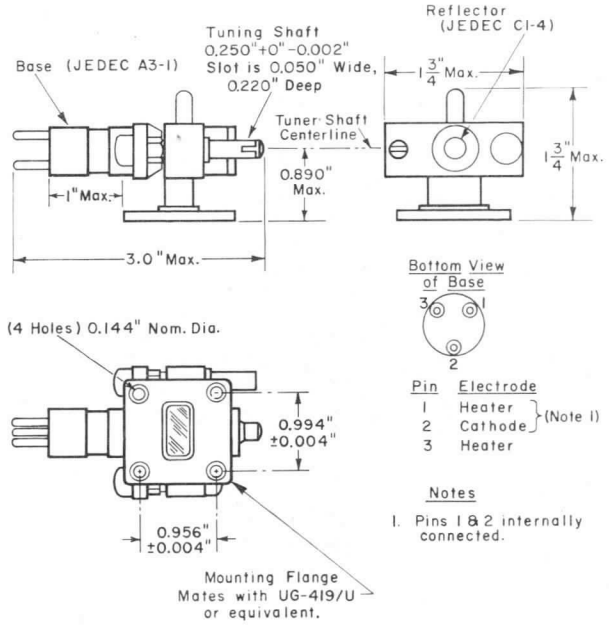

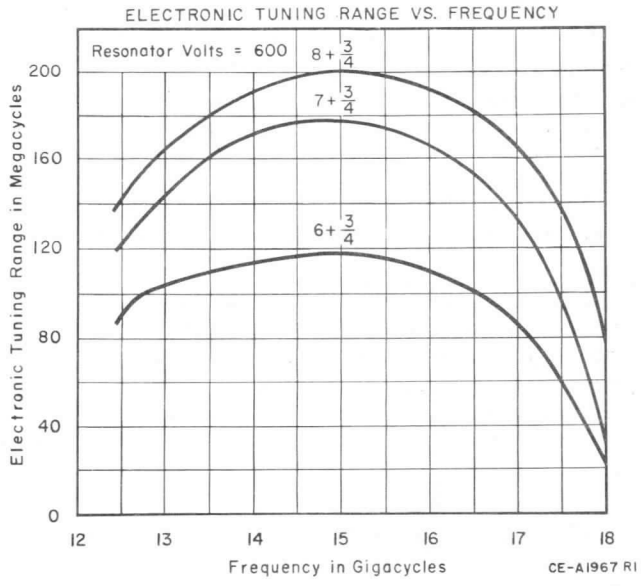

The information contained herein is supplied without assuming responsibility for infringement of patents or other rights of third parties which may result from its use. No license is granted by implication or otherwise under any patent or patent rights of Westinghouse Electric Corporation.

REFLEX KLYSTRON TYPE WL-111
14.0 to 17.5 Gc.

The WL-111 is an integral cavity, single screw tuned, reflex klystron, tunable from 14.0 to 17.5 Gc., designed for service in signal generator and laboratory applications where ease of tuning is required.

MECHANICAL

Net Weight (Approx.)	7 Ounces
Cooling	Forced air required above 10 watts resonator power input.
Connection:	
Base	3 Pin Pee Wee (JEDEC A3-1)
Reflector	Miniature Cap (JEDEC C1-4)
Mounting	Mates with UG 419/U Flange
Tuner	Single Screw, Slotted Shaft

ELECTRICAL

Cathode	Coated Unipotential
Heater:	
Voltage	6.3 Volts
Current	1.2 Amperes
Frequency	Tunable from 14.0 to 17.5 Gc.

MAXIMUM RATINGS (Note 1)

Absolute Maximum Values

Beam Voltage	625 max.		Volts
Reflector Voltage	−10 to −1000 max.		Volts
Heater Voltage	7.0 max.		Volts
Cathode Current	70 max.		Ma.
Body Temperature	200 max.		°C

TYPICAL OPERATION AT 14.0 Gc.

Resonator Volts = 600	Min.	Ave.	Max.	
Power Output (Matched Load)	50	75	–	mW.
Electronic Tuning Range	–	60	–	Mc.
Beam Current	–	55	65	Ma.
Reflector Voltage	–	−200	–	Volts
Heater Current	1.08	1.20	1.32	Amperes

TYPICAL OPERATION AT 15.5 Gc.

Resonator Volts = 600	Min.	Ave.	Max.	
Power Output (Matched Load)	80	105	–	mW.
Electronic Tuning Range	–	62	–	Mc.
Beam Current	–	55	65	Ma.
Reflector Voltage	–	−305	–	Volts
Heater Current	1.08	1.20	1.32	Amperes

TYPICAL OPERATION AT 17.5 Gc.

Resonator Volts = 600	Min.	Ave.	Max.	
Power Output (Matched Load)	30	60	–	mW.
Electronic Tuning Range	–	65	–	Mc.
Beam Current	–	55	65	Ma.
Reflector Voltage	–	−275	–	Volts
Heater Current	1.08	1.20	1.32	Amperes



NOTE

1. The given Maximum Ratings must not be exceeded if performance characteristics are to be maintained. All Maximum Ratings may not always be applied simultaneously.

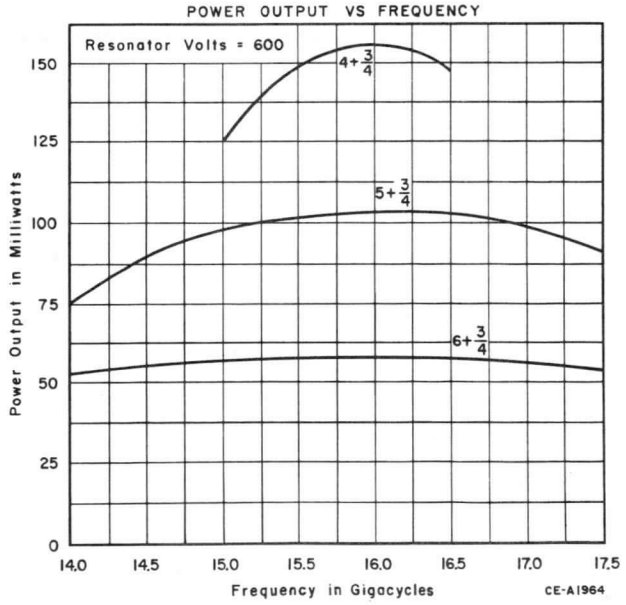

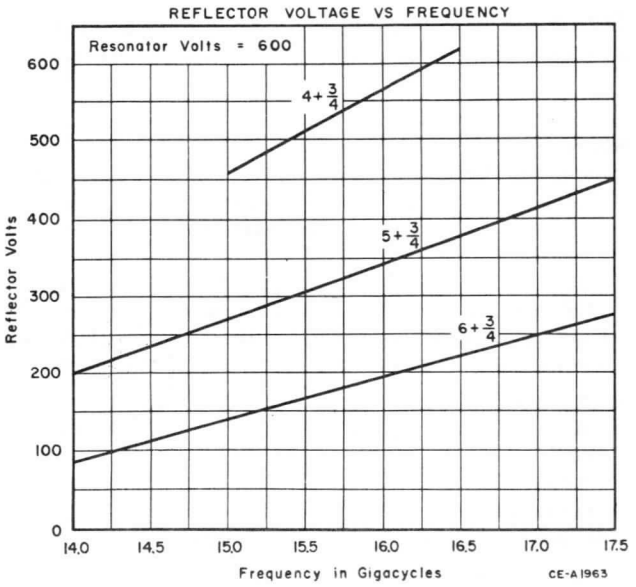

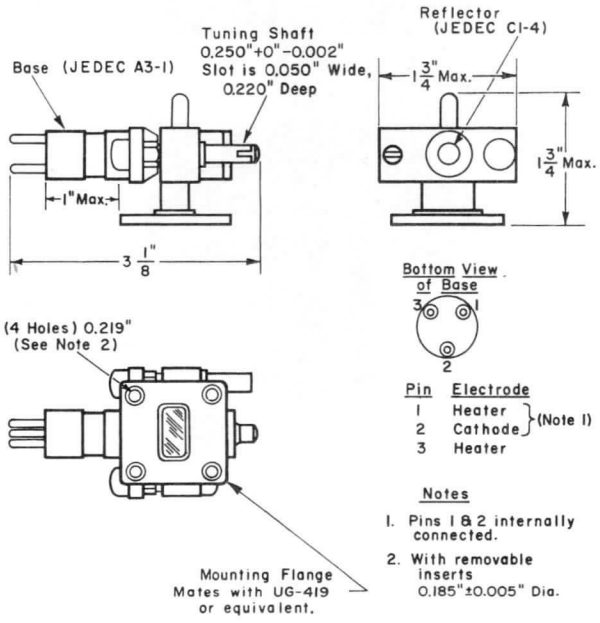

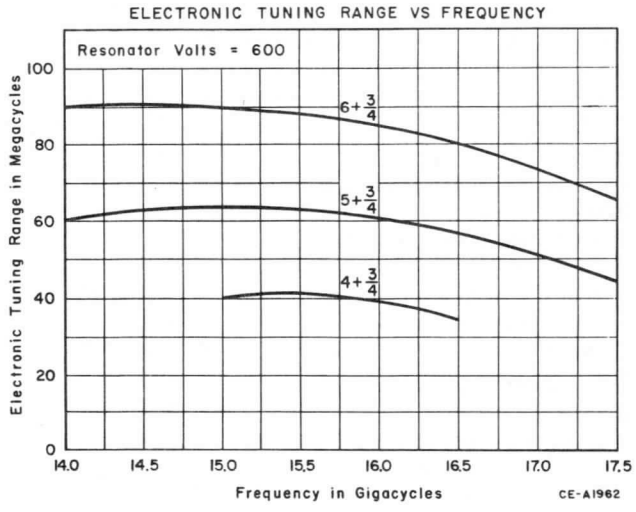

The information contained herein is supplied without assuming responsibility for infringement of patents or other rights of third parties which may result from its use. No license is granted by implication or otherwise under any patent or patent rights of Westinghouse Electric Corporation.

REFLEX KLYSTRON TYPE WL-113
7.5 to 11.0 Gc.

The WL-113 is an integral cavity, single screw tuned, reflex klystron, tunable from 7.5 to 11.0 Gc., designed for service in signal generator and laboratory applications where ease of tuning is required.

MECHANICAL

Net Weight (Approx.)	7 Ounces
Cooling	Forced air required above 10 watts resonator power input.
Connections	Flying Leads
Mounting	Mates with UG 39/U
Tuner	Single Screw, Slotted Shaft

ELECTRICAL

Cathode	Coated Unipotential	
Heater:		
Voltage	6.3	Volts
Current	1.2	Amperes
Frequency	Tunable from 7.5 to 11.0 Gc.	

MAXIMUM RATINGS (Note 1)

Absolute Maximum Values

Beam Voltage	550	max.	Volts
Reflector Voltage	–10 to –1000	max.	Volts
Heater Voltage	7.0	max.	Volts
Cathode Current	65	max.	Ma.
Body Temperature	200	max.	°C

TYPICAL OPERATION AT 7.5 Gc.

Resonator Volts = 500	Min.	Ave.	Max.	
Power Output (Matched Load)	50	130	–	mW.
Electronic Tuning Range	–	40	–	Mc.
Beam Current	–	50	60	Ma.
Reflector Voltage	–	–240	–	Volts
Heater Current	1.08	1.20	1.32	Amperes

TYPICAL OPERATION AT 9.5 Gc.

Resonator Volts = 500	Min.	Ave.	Max.	
Power Output (Matched Load)	180	300	–	mW.
Electronic Tuning Range	–	50	–	Mc.
Beam Current	–	50	60	Ma.
Reflector Voltage	–	–210	–	Volts
Heater Current	1.08	1.20	1.32	Amperes

TYPICAL OPERATION AT 11.0 Gc.

Resonator Volts = 500	Min.	Ave.	Max.	
Power Output (Matched Load)	100	120	–	mW.
Electronic Tuning Range	–	50	–	Mc.
Beam Current	–	50	60	Ma.
Reflector Voltage	–	–180	–	Volts
Heater Current	1.08	1.20	1.32	Amperes

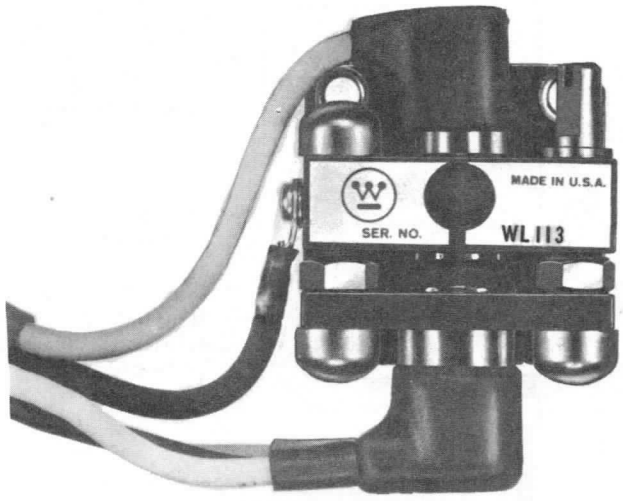

NOTE

1. The given Maximum Ratings must not be exceeded if performance characteristics are to be maintained. All Maximum Ratings may not always be applied simultaneously.

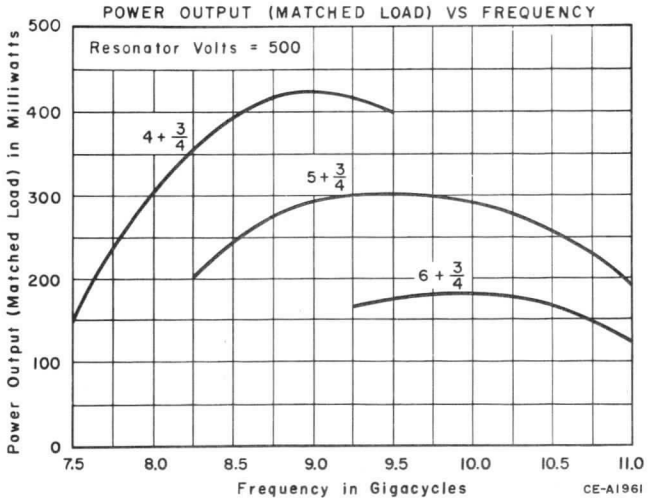

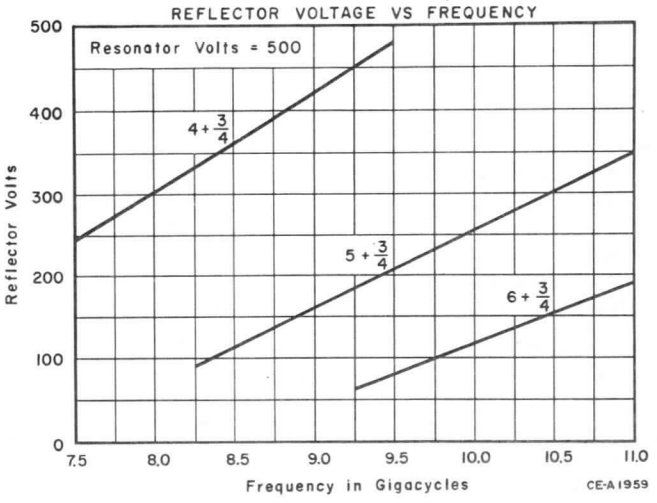

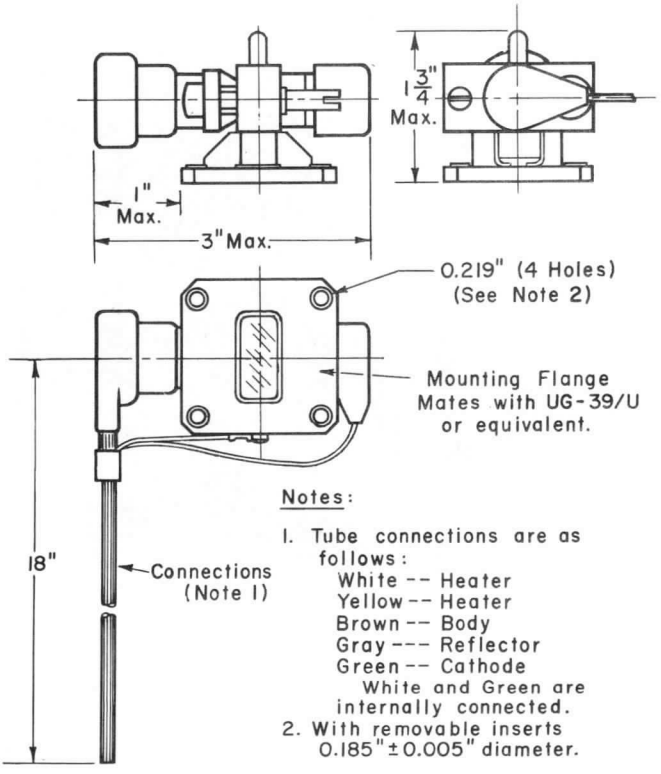

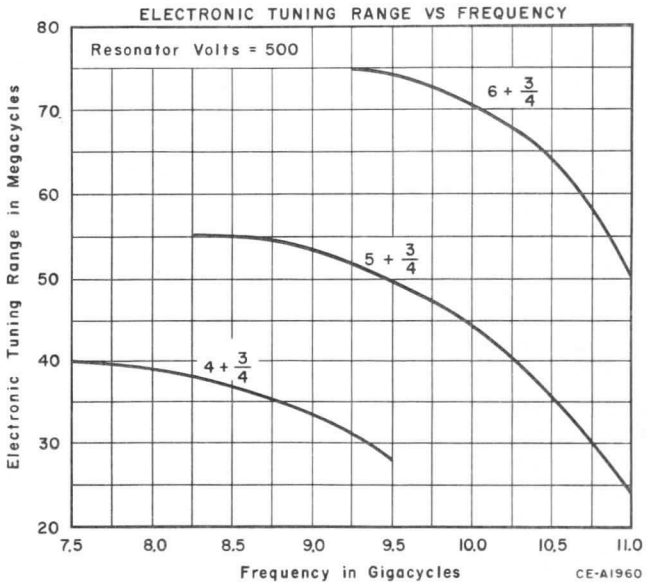

The information contained herein is supplied without assuming responsibility for infringement of patents or other rights of third parties which may result from its use. No license is granted by implication or otherwise under any patent or patent rights of Westinghouse Electric Corporation.

REFLEX KLYSTRON TYPE WL-114
8.1 to 12.4 Gc.

The WL-114 is an integral cavity, single screw tuned, reflex klystron, tunable from 8.1 to 12.4 Gc., designed for service in signal generator and laboratory applications where ease of tuning is required.

MECHANICAL

Net Weight (Approx.)	7 Ounces
Cooling	Forced air required above 10 watts resonator power input.
Connection	Flying Leads
Mounting	Mates with UG 39/U
Tuner	Single Screw, Slotted Shaft

ELECTRICAL

Cathode	Coated Unipotential	
Heater:		
Voltage	6.3	Volts
Current	1.2	Amperes
Frequency	Tunable from 8.1 to 12.4 Gc.	

MAXIMUM RATINGS (Note 1)
Absolute Maximum Values

Beam Voltage	550	max.	Volts
Reflector Voltage	−10 to −1000	max.	Volts
Heater Voltage	7.0	max.	Volts
Cathode Current	65	max.	Ma.
Body Temperature	200	max.	°C

TYPICAL OPERATION AT 8.2 Gc.

Resonator Volts = 500	Min.	Ave.	Max.	
Power Output (Matched Load)	100	150	–	mW.
Electronic Tuning Range	20	50	–	Mc.
Beam Current	–	50	65	Ma.
Reflector Voltage	–	−250	–	Volts
Heater Current	1.08	1.20	1.32	Amperes

TYPICAL OPERATION AT 10.0 Gc.

Resonator Volts = 500	Min.	Ave.	Max.	
Power Output (Matched Load)	100	250	–	mW.
Electronic Tuning Range	20	75	–	Mc.
Beam Current	–	50	65	Ma.
Reflector Voltage	–	−250	–	Volts
Heater Current	1.08	1.20	1.32	Amperes

TYPICAL OPERATION AT 12.4 Gc.

Resonator Volts = 500	Min.	Ave.	Max.	
Power Output (Matched Load)	100	150	–	mW.
Electronic Tuning Range	20	30	–	Mc.
Beam Current	–	50	65	Ma.
Reflector Voltage	–	−350	–	Volts
Heater Current	1.08	1.20	1.32	Amperes

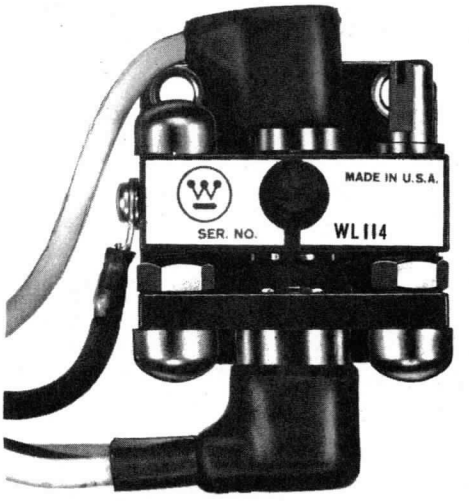

ACTUAL SIZE

NOTE

1. The given Maximum Ratings must not be exceeded if performance characteristics are to be maintained. All Maximum Ratings may not always be applied simultaneously.

PRINTED IN U.S.A.

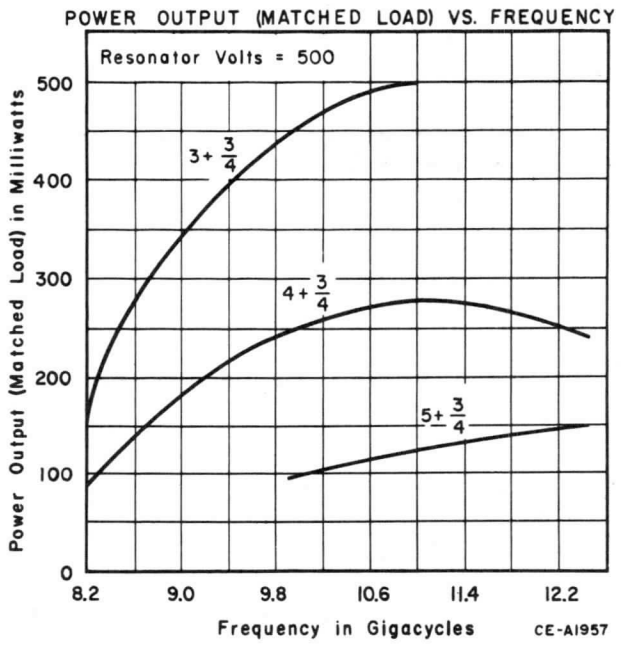

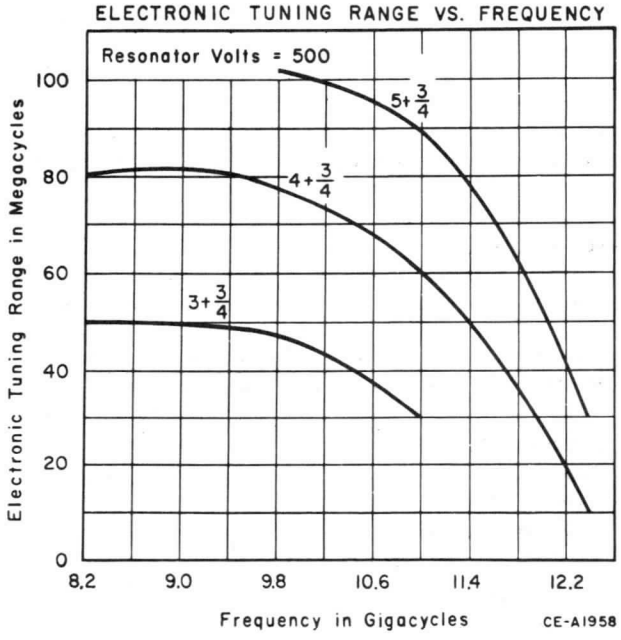

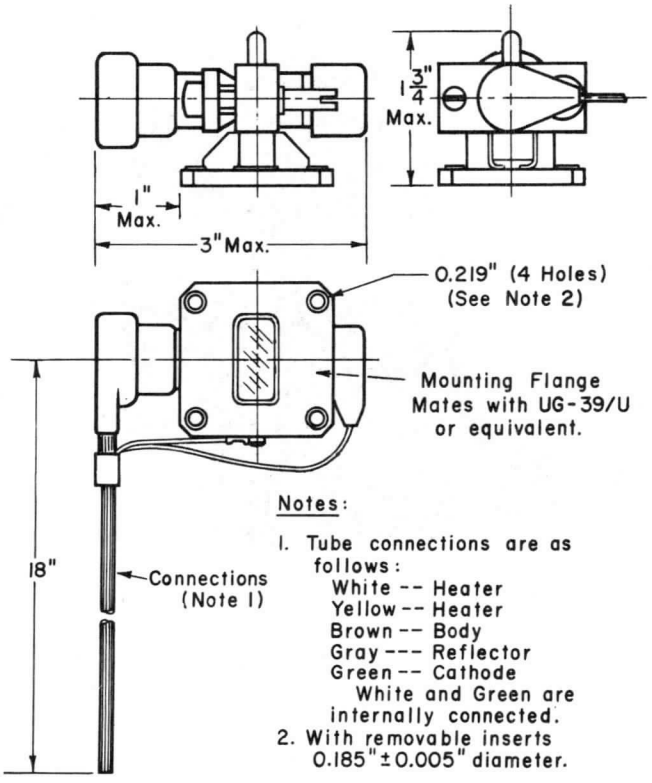

Notes:

1. Tube connections are as follows:
   White -- Heater
   Yellow -- Heater
   Brown -- Body
   Gray --- Reflector
   Green -- Cathode
   White and Green are internally connected.
2. With removable inserts 0.185" ± 0.005" diameter.

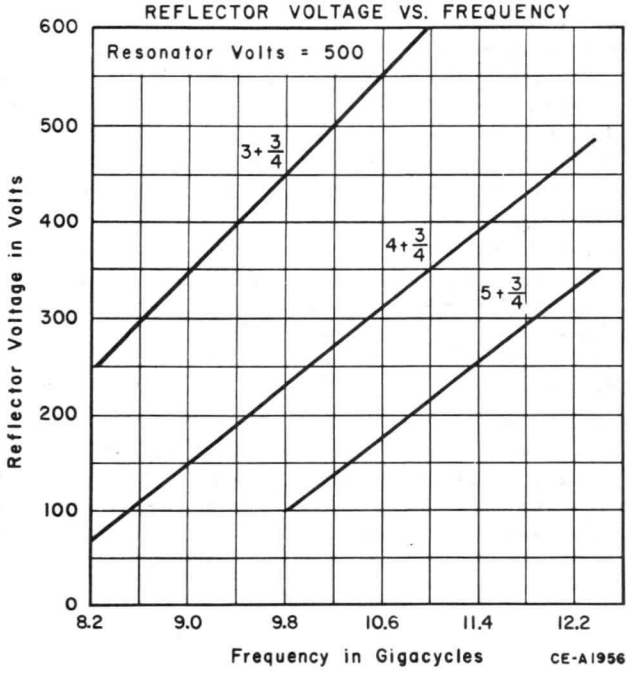

The information contained herein is supplied without assuming responsibility for infringement of patents or other rights of third parties which may result from its use. No license is granted by implication or otherwise under any patent or patent rights of Westinghouse Electric Corporation.

REFLEX KLYSTRON TYPE WL-117
12.4 to 18.0 Gc.

The WL-117 is an integral cavity, single screw tuned, reflex klystron, tunable from 12.4 to 18.0 Gc., designed for service in signal generator and laboratory applications where ease of tuning is required.

MECHANICAL

Net Weight (Approx.)	7 Ounces
Cooling	Forced air required above 10 watts resonator power input.
Connections	Flying Leads
Mounting	Mates with UG 419/U Flange
Tuner	Single Screw, Slotted Shaft

ELECTRICAL

Cathode	Coated Unipotential
Heater:	
Voltage	6.3 Volts
Current	0.45 Amperes
Frequency	Tunable from 12.4 to 18.0 Gc.

MAXIMUM RATINGS (Note 1)

Absolute Maximum Values

Beam Voltage	625 max.	Volts
Reflector Voltage	−10 to −1000 max.	Volts
Heater Voltage	7.0 max.	Volts
Cathode Current	70 max.	Ma.
Body Temperature	200 max.	°C

TYPICAL OPERATION AT 12.4 Gc.

Resonator Volts = 600	Min.	Ave.	Max.	
Power Output (Matched Load)	25	150	–	mW.
Electronic Tuning Range	–	90	–	Mc.
Beam Current	–	60	70	Ma.
Reflector Voltage	–	−200	–	Volts
Heater Current	0.40	0.45	0.50	Amperes

TYPICAL OPERATION AT 15.0 Gc.

Resonator Volts = 600	Min.	Ave.	Max.	
Power Output (Matched Load)	–	240	–	mW.
Electronic Tuning Range	–	150	–	Mc.
Beam Current	–	60	70	Ma.
Reflector Voltage	–	−230	–	Volts
Heater Current	0.40	0.45	0.50	Amperes

TYPICAL OPERATION AT 17.5 Gc.

Resonator Volts = 600	Min.	Ave.	Max.	
Power Output (Matched Load)	25	150	–	mW.
Electronic Tuning Range	–	45	–	Mc.
Beam Current	–	60	70	Ma.
Reflector Voltage	–	−300	–	Volts
Heater Current	0.40	0.45	0.50	Amperes

NOTE

1. The given Maximum Ratings must not be exceeded if performance characteristics are to be maintained. All Maximum Ratings may not always be applied simultaneously.

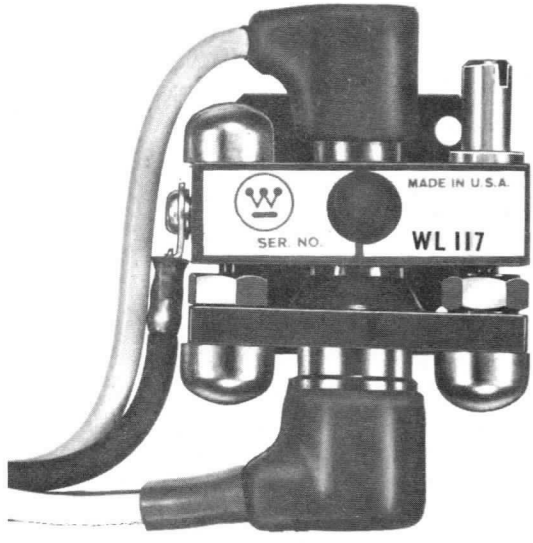

ACTUAL SIZE

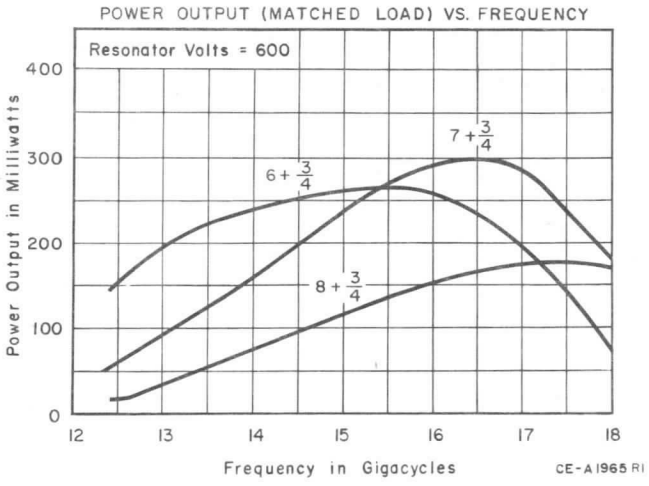

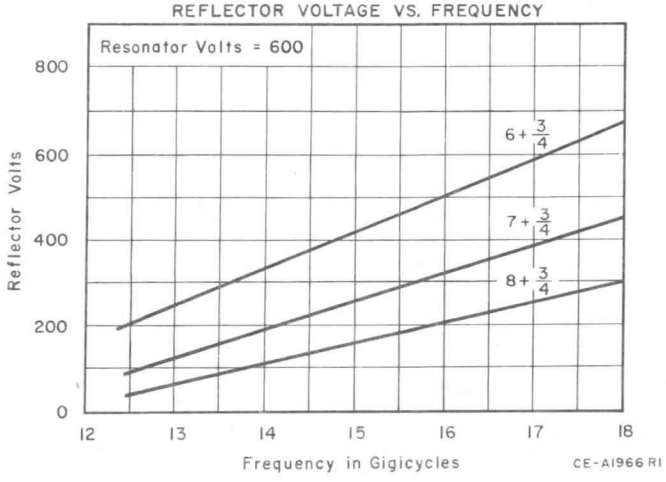

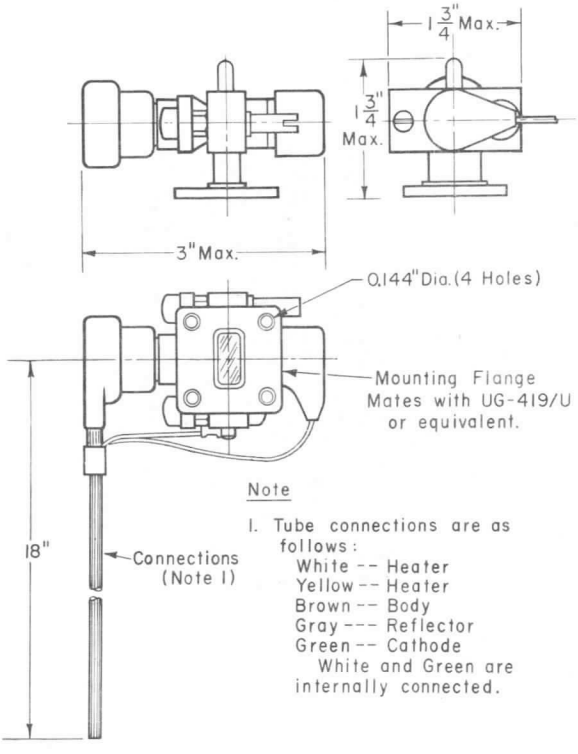

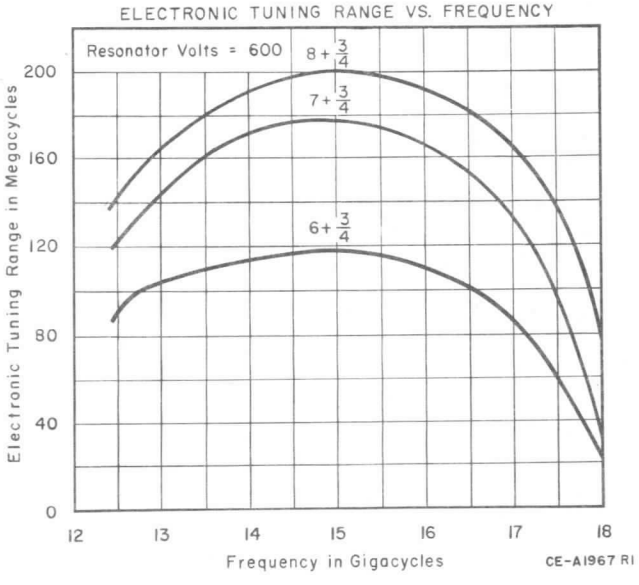

The information contained herein is supplied without assuming responsibility for infringement of patents or other rights of third parties which may result from its use. No license is granted by implication or otherwise under any patent or patent rights of Westinghouse Electric Corporation.

REFLEX KLYSTRON TYPE WL-118
14.0 to 17.5 Gc.

The WL-118 is an integral cavity, single screw tuned, reflex klystron, tunable from 14.0 to 17.5 Gc., designed for service in signal generator and laboratory applications where ease of tuning is required.

MECHANICAL

Net Weight (Approx.)	7 Ounces
Cooling	Forced air required above 10 watts resonator power input.
Connections	Flying Leads
Mounting	Mates with UG 419/U Flange
Tuner	Single Screw, Slotted Shaft

ELECTRICAL

Cathode	Coated Unipotential
Heater:	
Voltage	6.3 Volts
Current	1.2 Amperes
Frequency	Tunable from 14.0 to 17.5 Gc.

MAXIMUM RATINGS (Note 1)

Absolute Maximum Values

Beam Voltage	625 max.	Volts
Reflector Voltage	−10 to −1000 max.	Volts
Heater Voltage	7.0 max.	Volts
Cathode Current	70 max.	Ma.
Body Temperature	200 max.	°C

TYPICAL OPERATION AT 14.0 Gc.

Resonator Volts = 600	Min.	Ave.	Max.	
Power Output (Matched Load)	50	75	–	mW.
Electronic Tuning Range	–	60	–	Mc.
Beam Current	–	55	65	Ma.
Reflector Voltage	–	−200	–	Volts
Heater Current	1.08	1.20	1.32	Amperes

TYPICAL OPERATION AT 15.5 Gc.

Resonator Volts = 600	Min.	Ave.	Max.	
Power Output (Matched Load)	80	105	–	mW.
Electronic Tuning Range	–	62	–	Mc.
Beam Current	–	55	65	Ma.
Reflector Voltage	–	−305	–	Volts
Heater Current	1.08	1.20	1.32	Amperes

TYPICAL OPERATION AT 17.0 Gc.

Resonator Volts = 600	Min.	Ave.	Max.	
Power Output (Matched Load)	30	60	–	mW.
Electronic Tuning Range	–	65	–	Mc.
Beam Current	–	55	65	Ma.
Reflector Voltage	–	−275	–	Volts
Heater Current	1.08	1.20	1.32	Amperes

NOTE

1. The given Maximum Ratings must not be exceeded if performance characteristics are to be maintained. All Maximum Ratings may not always be applied simultaneously.

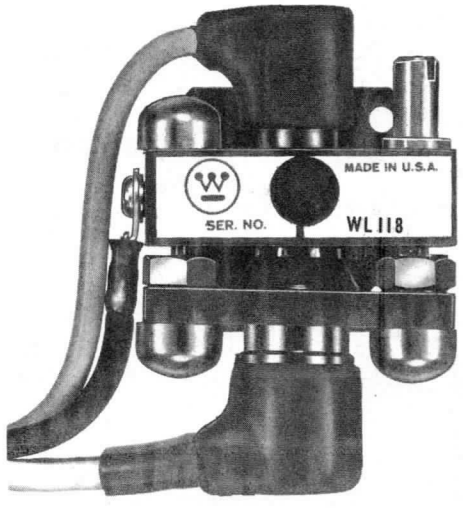

ACTUAL SIZE

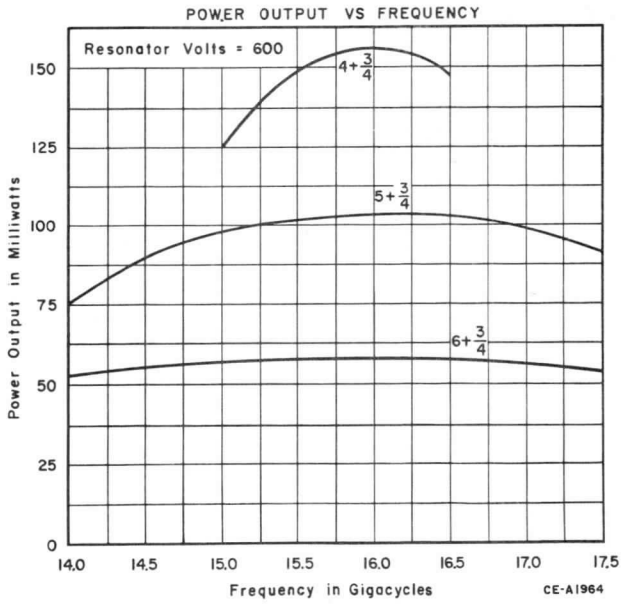

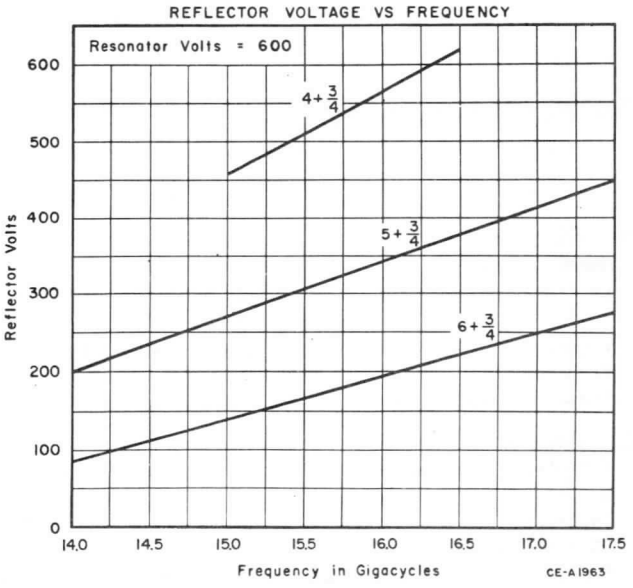

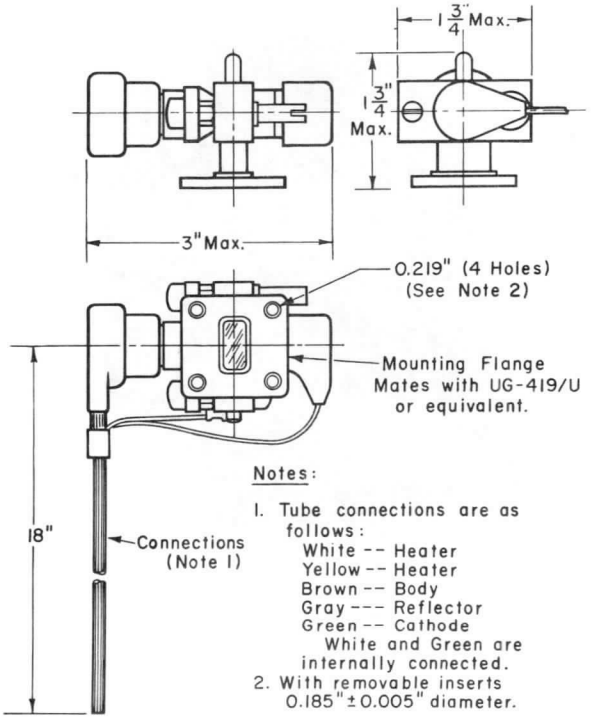

Notes:

1. Tube connections are as follows:
   White -- Heater
   Yellow -- Heater
   Brown -- Body
   Gray --- Reflector
   Green -- Cathode
   White and Green are internally connected.
2. With removable inserts 0.185" ± 0.005" diameter.

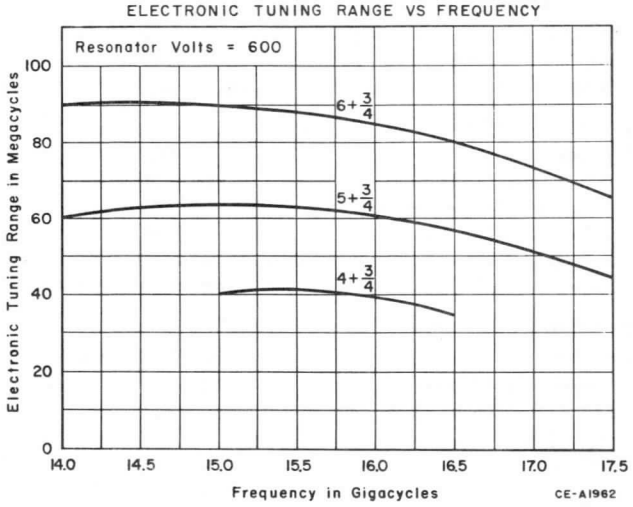

The information contained herein is supplied without assuming responsibility for infringement of patents or other rights of third parties which may result from its use. No license is granted by implication or otherwise under any patent or patent rights of Westinghouse Electric Corporation.

March 15, 1965

REFLEX KLYSTRON TYPE WL-119
Family of Tubes from 11.0 to 14.0 GHz

The WL-119 group are integral cavity, fixed frequency, trimmable, reflex klystrons covering a range of 11.0 to 14.0 GHz designed for service in low-power transmitters and parametric pump applications. The trimming range is 100 MHz.

MECHANICAL

Net Weight (Approx.)	6 Ounces
Cooling	Forced Air Required Above 10 Watts Resonator Power Input.
Connections	Flying Leads
Mounting	Mates with UG-419/U Flange
Trimming Adjustment	Differential Screw, Hex Head
Vibration (50 to 1000 cps)	10 G
Shock	150 G

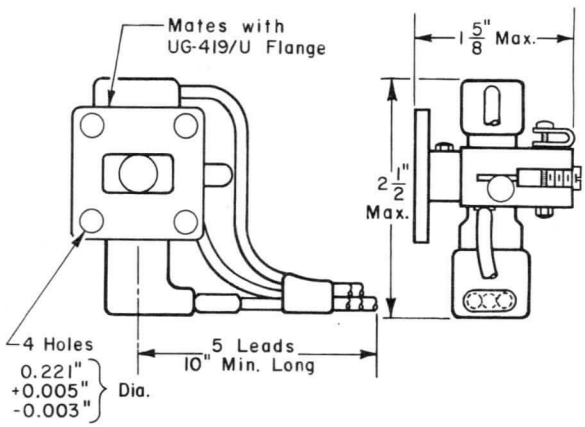

Lead Connections

Yellow---Heater
Green----Cathode
White----Heater, Cathode
Gray----Reflector
Brown---Body

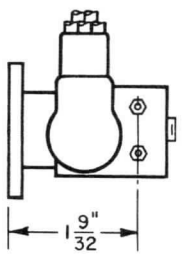

Note:
Green and White Lead Are Internally Connected.

ELECTRICAL

Cathode	Coated Unipotential
Heater:	
Voltage	6.3 Volts
Current	1.2 Amperes
Frequency	In Range from 11.0 to 14.0 GHz, Trimmable ±100 MHz

MAXIMUM RATINGS (Note 1)

Absolute Maximum Values

Beam Voltage	550 max.	Volts
Reflector Voltage	−20 to −1000 max.	Volts
Heater Voltage	7.0 max.	Volts
Cathode Current	70 max.	mA
Body Temperature	200 max.	°C

TYPICAL OPERATION AT 12.75 GHz

Resonator Volts = 500	Min.	Ave.	Max.	
Power Output	400	450	–	mW.
Electronic Tuning Range	50	58	–	MHz
Beam Current	–	52	65	Ma.
Reflector Voltage	−270	−290	−350	Volts
Heater Current	1.08	1.20	1.32	Amperes
Residual FM	–	0.04	0.1	MHz
Heater Voltage Sensitivity	–	0.8	5.0	MHz/Volt
Temperature Coefficient	−0.15	−0.04	+0.15	MHz/°C
Vibration 10 G (50 to 1000 Cycles)	–	0.13	0.25	MHz

NOTE

1. The given Maximum Ratings must not be exceeded if performance characteristics are to be maintained. All Maximum Ratings may not always be applied simultaneously.

The information contained herein is supplied without assuming responsibility for infringement of patents or other rights of third parties which may result from its use. No license is granted by implication or otherwise under any patent or patent rights of Westinghouse Electric Corporation.

REFLEX KLYSTRON TYPE WL-119S

The WL-119S is an integral cavity, mechanically tuned, reflex klystron, trimmable from 13.245 to 13.345 GHz designed for service in low-power transmitter applications.

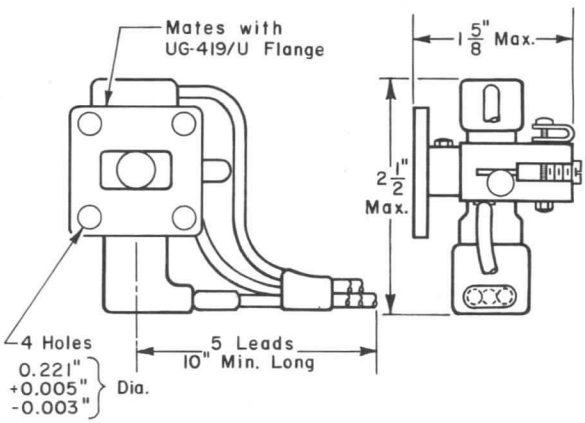

Lead Connections

Yellow---Heater
Green----Cathode
White----Heater, Cathode
Gray----Reflector
Brown---Body

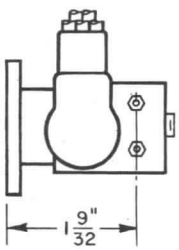

Note:
Green and White Lead Are Internally Connected.

MECHANICAL

Net Weight	7 Ounces
Cooling	Forced Air Required Above 10 Watts Resonator Power Input.
Connection	Flying Leads
Mounting	Mates with UG-419/U Flange
Trimming Adjustment	Slotted Screw
Vibration (50 to 1000 cps)	10G
Shock	150G

ELECTRICAL

Cathode	Coated Unipotential
Heater:	
Voltage	6.3 Volts
Current	1.2 Amperes
Frequency	Trimmable from 13.245 to 13.345 GHz

MAXIMUM RATINGS (Note 1)

Absolute Maximum Values

Beam Voltage	400 max.	Volts
Reflector Voltage	−20 to −1000 max.	Volts
Heater Voltage	7.0 max.	Volts
Cathode Current	55 max.	mA
Body Temperature	200 max.	°C

TYPICAL OPERATION AT 13.295 GHz

Resonator Volts = 300	Min.	Ave.	Max.	
Power Output	20	50	100	mW.
Electronic Tuning Range	30	60	–	MHz
Beam Current	20	30	50	mA
Reflector Voltage	−75	−100	−115	Volts
Heater Current	0.50	1.20	1.35	Amperes

NOTE

1. The given Maximum Ratings must not be exceeded if performance characteristics are to be maintained. All Maximum Ratings may not always be applied simultaneously.

The information contained herein is supplied without assuming responsibility for infringement of patents or other rights of third parties which may result from its use. No license is granted by implication or otherwise under any patent or patent rights of Westinghouse Electric Corporation.

Westinghouse

WL-121

July 1, 1963

REFLEX KLYSTRON TYPE WL-121
7.5 to 11.0 Gc.

The WL-121 is an integral cavity, micrometer barrel tuned, reflex klystron, tunable from 7.5 to 11.0 Gc., designed for service in signal generator and laboratory type applications where ease of tuning is required.

MECHANICAL

Net Weight (Approx.)	7 Ounces
Cooling	Forced air required above 10 watts resonator power input.
Connections:	
Base	Pee Wee 3-Pin (JEDEC A3-1)
Reflector	Miniature Cap (JEDEC C1-4)
Mounting	Mates with UG 39/U or UG 40/U
Tuner	Micrometer Barrel
Vibration (50 to 1000 cps)	10 G
Shock	100 G

ELECTRICAL

Cathode	Coated Unipotential
Heater:	
Voltage	6.3 Volts
Current	1.2 Amperes
Frequency	Tunable from 7.5 to 11.0 Gc.

MAXIMUM RATINGS (Note 1)
Absolute Maximum Values

Beam Voltage	550 max.		Volts
Reflector Voltage	−10 to −1000 max.		Volts
Heater Voltage	7.0 max.		Volts
Cathode Current	65 max.		Ma.
Body Temperature	200 max.		°C

TYPICAL OPERATION AT 7.5 Gc.

Resonator Volts = 500	Min.	Ave.	Max.	
Power Output (Matched Load)	50	130	–	mW.
Electronic Tuning Range	–	40	–	Mc.
Beam Current	–	50	60	Ma.
Reflector Voltage	–	−240	–	Volts
Heater Current	1.08	1.20	1.32	Amperes

TYPICAL OPERATION AT 9.5 Gc.

Resonator Volts = 500	Min.	Ave.	Max.	
Power Output (Matched Load)	180	300	–	mW.
Electronic Tuning Range	–	50	–	Mc.
Beam Current	–	50	60	Ma.
Reflector Voltage	–	−210	–	Volts
Heater Current	1.08	1.20	1.32	Amperes

TYPICAL OPERATION AT 11.0 Gc.

Resonator Volts = 500				
Power Output (Matched Load)	100	120	–	mW.
Electronic Tuning Range	–	50	–	Mc.
Beam Current	–	50	60	Ma.
Reflector Voltage	–	−180	–	Volts
Heater Current	1.08	1.20	1.32	Amperes

NOTE

1. The given Maximum Ratings must not be exceeded if performance characteristics are to be maintained. All Maximum Ratings may not always be applied simultaneously.



ACTUAL SIZE

PRINTED IN U.S.A.

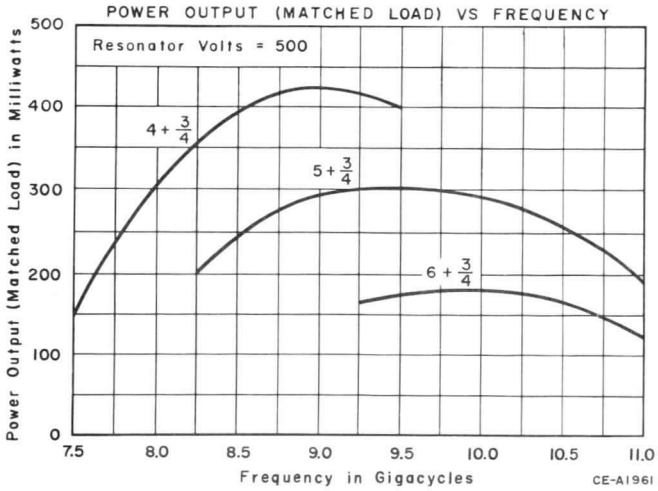

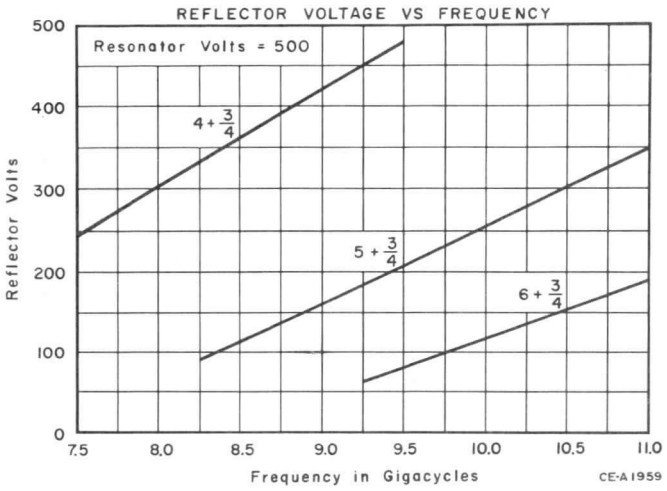

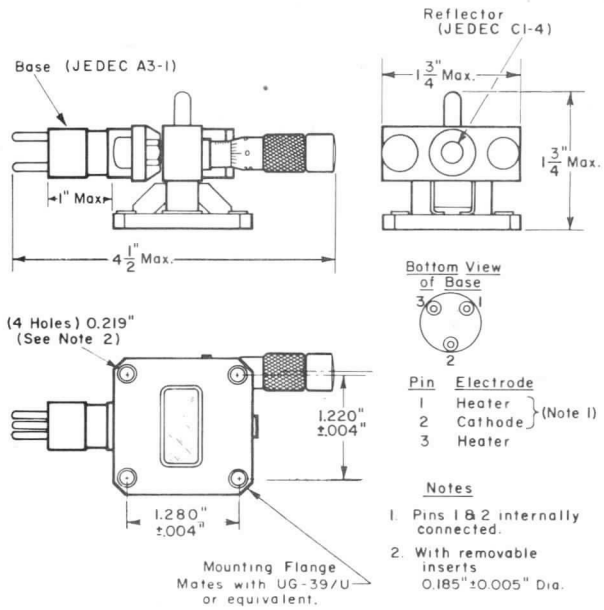

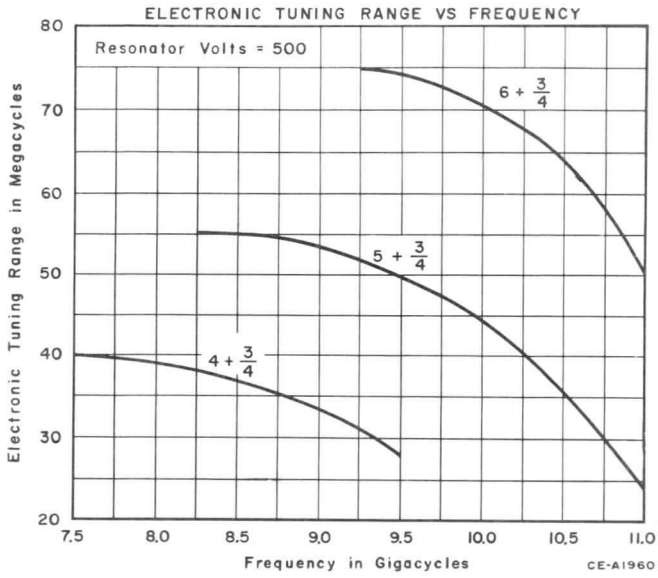

The information contained herein is supplied without assuming responsibility for infringement of patents or other rights of third parties which may result from its use. No license is granted by implication or otherwise under any patent or patent rights of Westinghouse Electric Corporation.

REFLEX KLYSTRON TYPE WL-122

The WL-122 is an integral cavity, micrometer dial tuned, reflex klystron with waveguide output tunable from 8.2 to 12.4 Gc., designed for service as a bench oscillator.

ELECTRICAL

Cathode	Coated Unipotential	
Heater:		
Voltage	6.3	Volts
Current	1.2 ± 0.12	Amperes
Frequency	Tunable from 8.2 to 12.4 Gc.	

MAXIMUM RATINGS (Note 1)

Absolute Maximum Values

Beam Voltage	550	max.	Volts
Reflector Voltage	−10 to −1000	max.	Volts
Heater Voltage	7.0	max.	Volts
Cathode Current	65	max.	Ma.
Body Temperature	200	max.	°C

TYPICAL OPERATION AT 8.2 Gc., Mode: 3 + 3/4

Resonator Volts = 500

	Min.	Ave.	Max.	
Power Output	50	100	–	mW.
Electronic Tuning Range	20	50	–	Mc.
Beam Current	–	50	65	Ma.
Reflector Voltage	–	−250	–	Volts

TYPICAL OPERATION AT 10.0 Gc., Mode: 4 + 3/4

Resonator Volts = 500

	Min.	Ave.	Max.	
Power Output	100	250	–	mW.
Electronic Tuning Range	20	75	–	Mc.
Beam Current	–	50	65	Ma.
Reflector Voltage	–	−250	–	Volts

TYPICAL OPERATION AT 12.4 Gc. Mode: 4 + 3/4

Resonator Volts = 500

	Min.	Ave.	Max.	
Power Output	100	150	–	mW.
Electrode Tuning Range	20	30	–	Mc.
Beam Current	–	50	65	Ma.
Reflector Voltage	–	−350	–	Volts

NOTE

1. The given Maximum Ratings must not be exceeded if performance characteristics are to be maintained. All Maximum Ratings may not always be applied simultaneously. Resonator power input higher than 10 watts requires forced-air cooling of tube.

MECHANICAL

Net Weight (Approx.)	7 Ounces
Base	Peewee 3-Pin (JEDEC A3-1)
Reflector	Miniature Cap (JEDEC C1-4)
Mounting	Mates with UG 39/U Flange
Tuner	Micrometer Dial

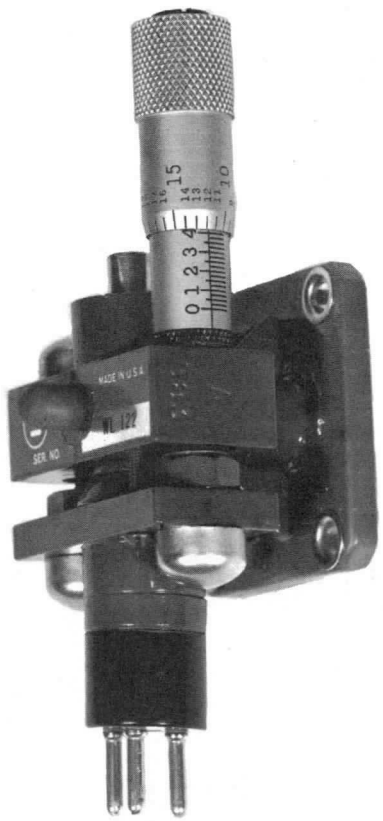

ACTUAL SIZE

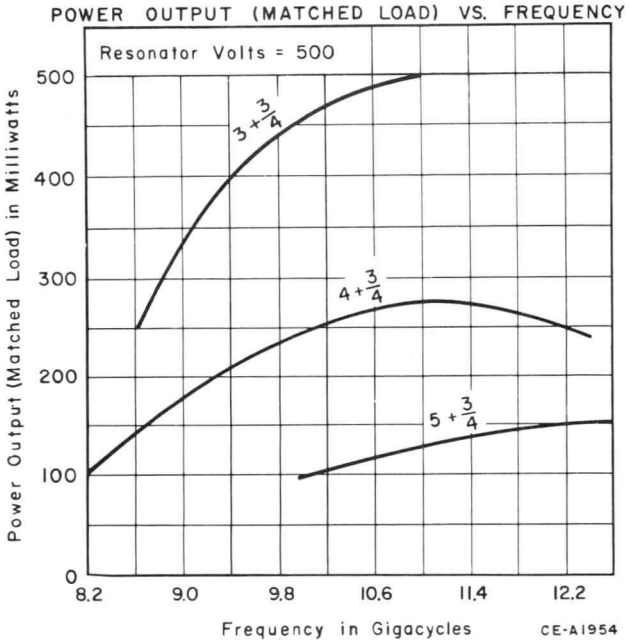

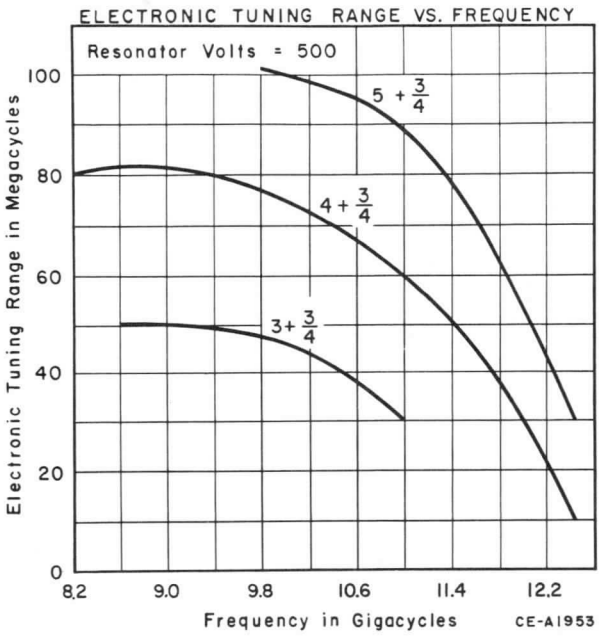

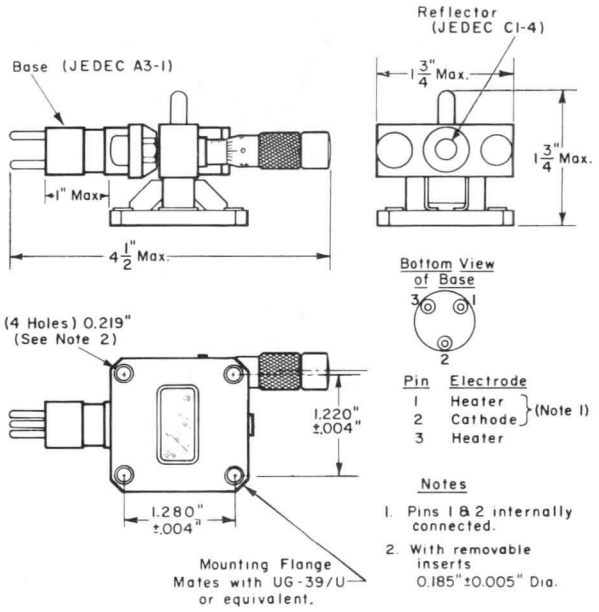

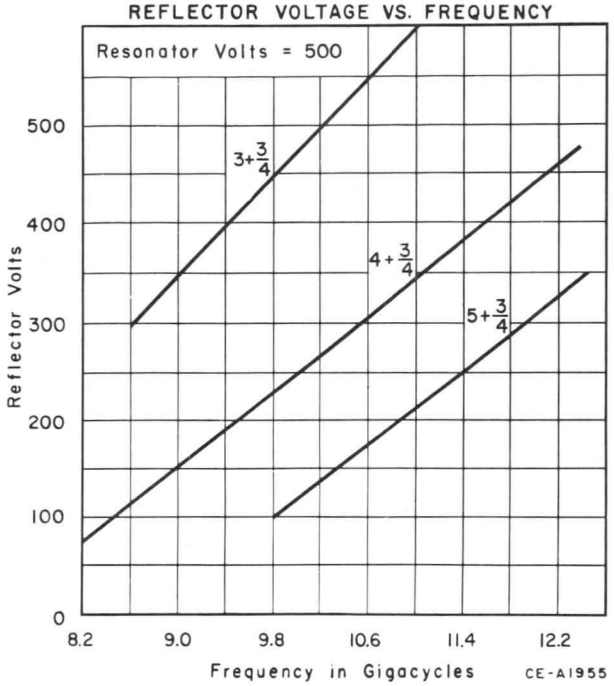

The information contained herein is supplied without assuming responsibility for infringement of patents or other rights of third parties which may result from its use. No license is granted by implication or otherwise under any patent or patent rights of Westinghouse Electric Corporation.

REFLEX KLYSTRON TYPE WL-124
12.4 to 18.0 Gc.

The WL-124 is an integral cavity, micrometer dial tuned, reflex klystron, tunable from 12.4 to 18.0 Gc., designed for service in signal generator and laboratory applications where ease of tuning is required.

MECHANICAL

Net Weight (Approx.)	7 Ounces
Cooling	Forced air required above 10 watts resonator power input.
Connection:	
Base	3 Pin Pee Wee (JEDEC A3-1)
Reflector	Miniature Cap (JEDEC C1-4)
Mounting	Mates with UG 419/U Flange
Tuner	Micrometer Dial

ELECTRICAL

Cathode	Coated Unipotential
Heater:	
Voltage	6.3 Volts
Current	0.45 Amperes
Frequency	Tunable from 12.4 to 18.0 Gc.

MAXIMUM RATINGS (Note 1)
Absolute Maximum Values

Beam Voltage	625 max.	Volts
Reflector Voltage	–10 to –1000 max.	Volts
Heater Voltage	7.0 max.	Volts
Cathode Current	70 max.	Ma.
Body Temperature	200 max.	°C

TYPICAL OPERATION AT 12.4 Gc.

Resonator Volts = 600	Min.	Ave.	Max.	
Power Output (Matched Load)	25	150	–	mW.
Electronic Tuning Range	–	90	–	Mc.
Beam Current	–	60	70	Ma.
Reflector Voltage	–	–200	–	Volts
Heater Current	0.40	0.45	0.50	Amperes

TYPICAL OPERATION AT 15.0 Gc.

Resonator Volts = 600	Min.	Ave.	Max.	
Power Output (Matched Load)	–	240	–	mW.
Electronic Tuning Range	–	150	–	Mc.
Beam Current	–	60	70	Ma.
Reflector Voltage	–	–230	–	Volts
Heater Current	0.40	0.45	0.50	Amperes

TYPICAL OPERATION AT 17.5 Gc.

Resonator Volts = 600	Min.	Ave.	Max.	
Power Output (Matched Load)	25	150	–	mW.
Electronic Tuning Range	–	45	–	Mc.
Beam Current	–	60	70	Ma.
Reflector Voltage	–	–300	–	Volts
Heater Current	0.40	0.45	0.50	Amperes

NOTE

1. The given Maximum Ratings must not be exceeded if performance characteristics are to be maintained. All Maximum Ratings may not always be applied simultaneously.

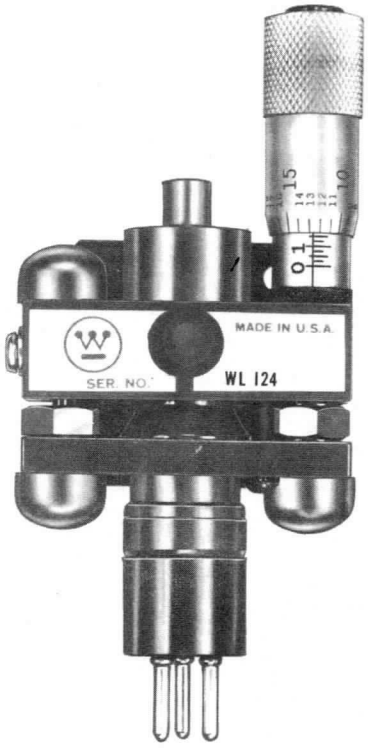

ACTUAL SIZE

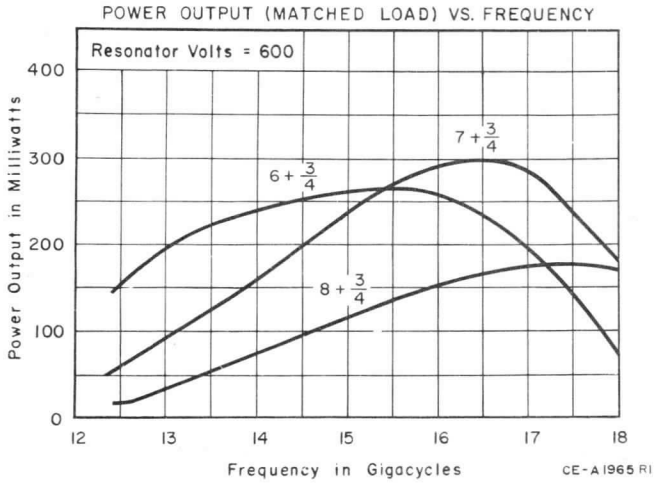

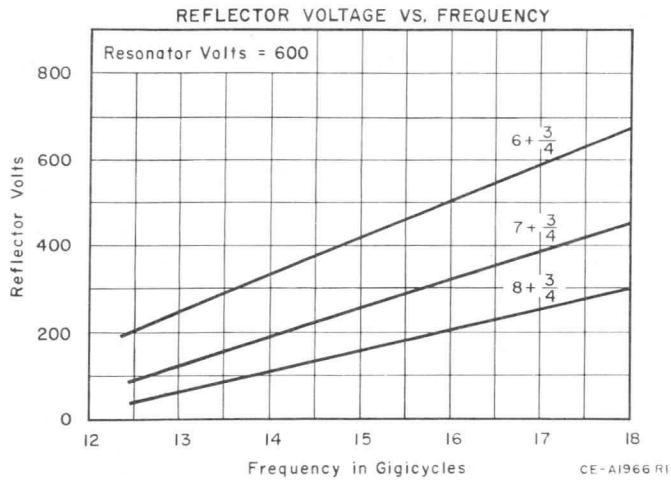

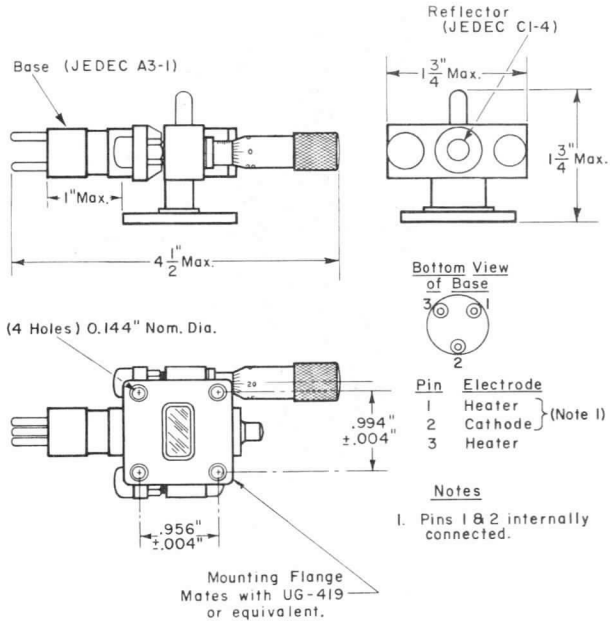

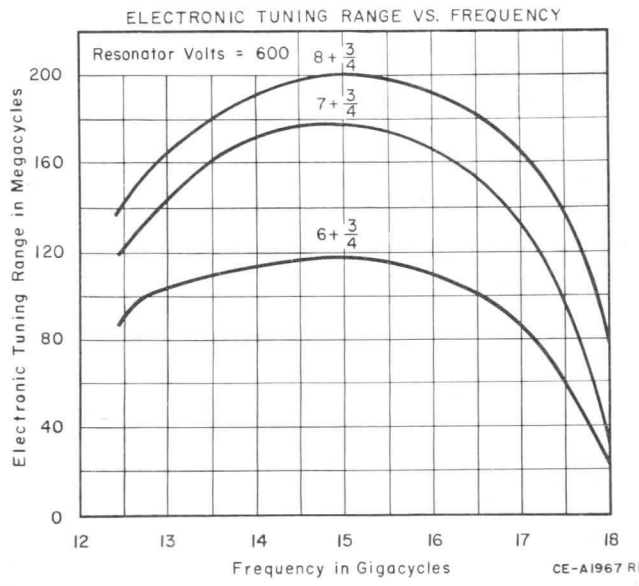

The information contained herein is supplied without assuming responsibility for infringement of patents or other rights of third parties which may result from its use. No license is granted by implication or otherwise under any patent or patent rights of Westinghouse Electric Corporation.

REFLEX KLYSTRON TYPE WL-126
14.0 to 17.5 Gc.

The WL-126 is an integral cavity, micrometer barrel tuned, reflex klystron, tunable from 14.0 to 17.5 Gc., designed for service in signal generator and laboratory applications where ease of tuning is required.

MECHANICAL

Net Weight (Approx.)	7 Ounces
Cooling	Forced air required above 10 watts resonator power input.
Connection:	
Base	3 Pin Pee Wee (JEDEC A3-1)
Reflector	Miniature Cap (JEDEC C1-4)
Mounting	Mates with UG 419/U Flange
Tuner	Micrometer Barrel

ELECTRICAL

Cathode	Coated Unipotential	
Heater:		
Voltage	6.3	Volts
Current	1.2	Amperes
Frequency	Tunable from 14.0 to 17.5 Gc.	

MAXIMUM RATINGS (Note 1)

Absolute Maximum Values

Beam Voltage	625 max.	Volts
Reflector Voltage	−10 to −1000 max.	Volts
Heater Voltage	7.0 max.	Volts
Cathode Current	70 max.	Ma.
Body Temperature	200 max.	°C

TYPICAL OPERATION AT 14.0 Gc.

Resonator Volts = 600	Min.	Ave.	Max.	
Power Output (Matched Load)	50	75	–	mW.
Electronic Tuning Range	–	60	–	Mc.
Beam Current	–	55	65	Ma.
Reflector Voltage	–	−200	–	Volts
Heater Current	1.08	1.20	1.32	Amperes

TYPICAL OPERATION AT 15.5 Gc.

Resonator Volts = 600	Min.	Ave.	Max.	
Power Output (Matched Load)	80	105	–	mW.
Electronic Tuning Range	–	62	–	Mc.
Beam Current	–	55	65	Ma.
Reflector Voltage	–	−305	–	Volts
Heater Current	1.08	1.20	1.32	Amperes

TYPICAL OPERATION AT 17.5 Gc.

Resonator Volts = 600	Min.	Ave.	Max.	
Power Output (Matched Load)	30	60	–	mW.
Electronic Tuning Range	–	65	–	Mc.
Beam Current	–	55	65	Ma.
Reflector Voltage	–	−275	–	Volts
Heater Current	1.08	1.20	1.32	Amperes



ACTUAL SIZE

NOTE

1. The given Maximum Ratings must not be exceeded if performance characteristics are to be maintained. All Maximum Ratings may not always be applied simultaneously.

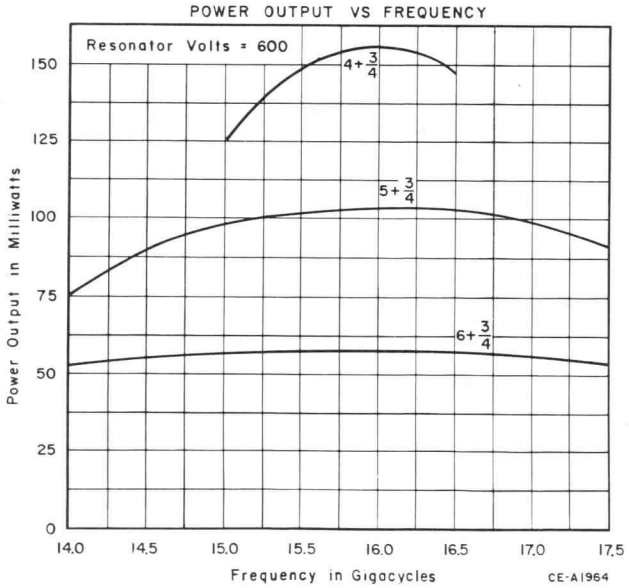

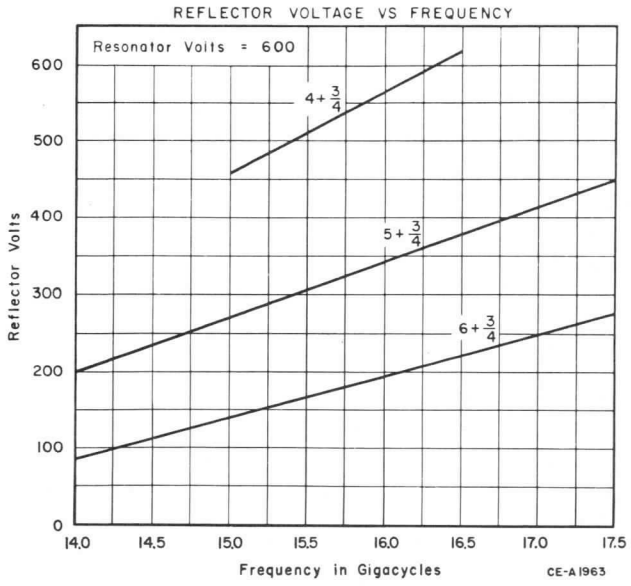

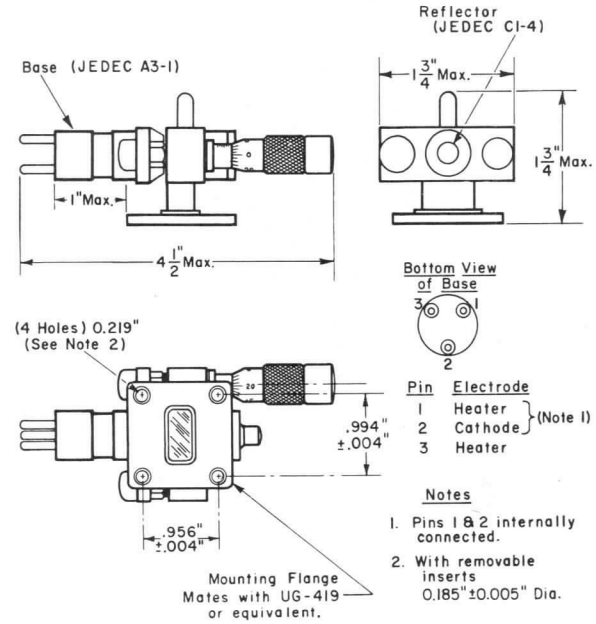

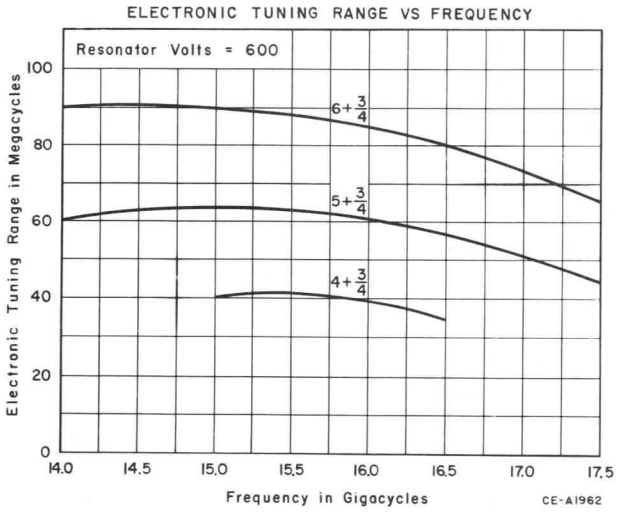

The information contained herein is supplied without assuming responsibility for infringement of patents or other rights of third parties which may result from its use. No license is granted by implication or otherwise under any patent or patent rights of Westinghouse Electric Corporation.

REFLEX KLYSTRON TYPE WL-128
8.1 to 12.4 Gc.

The WL-128 is an integral cavity, single screw tuned, reflex klystron, tunable from 8.1 to 12.4 Gc., designed for service in signal generator and laboratory applications where ease of tuning is required.

ELECTRICAL

Cathode	Coated Unipotential
Heater:	
Voltage	6.3 Volts
Current	1.2 Amperes
Frequency	Tunable from 8.1 to 12.4 Gc.

MAXIMUM RATINGS (Note 1)

Absolute Maximum Values

Beam Voltage	550	max.	Volts
Reflector Voltage	−10 to −1000	max.	Volts
Heater Voltage	7.0	max.	Volts
Cathode Current	65	max.	Ma.
Body Temperature	200	max.	°C

TYPICAL OPERATION AT 8.2 Gc.

Resonator Volts = 500	Min.	Ave.	Max.	
Power Output (Matched Load)	100	150	–	mW.
Electronic Tuning Range	20	50	–	Mc.
Beam Current	–	50	65	Ma.
Reflector Voltage	–	−250	–	Volts
Heater Current	1.08	1.20	1.32	Amperes

TYPICAL OPERATION AT 10.0 Gc.

Resonator Volts = 500	Min.	Ave.	Max.	
Power Output (Matched Load)	100	250	–	mW.
Electronic Tuning Range	20	75	–	Mc.
Beam Current	–	50	65	Ma.
Reflector Voltage	–	−250	–	Volts
Heater Current	1.08	1.20	1.32	Amperes

TYPICAL OPERATION AT 12.4 Gc.

Resonator Volts = 500	Min.	Ave.	Max.	
Power Output (Matched Load)	100	150	–	mW.
Electronic Tuning Range	20	30	–	Mc.
Beam Current	–	50	65	Ma.
Reflector Voltage	–	−350	–	Volts
Heater Current	1.08	1.20	1.32	Amperes

NOTE

1. The given Maximum Ratings mustnot be exceeded ifperformance characteristics are to be maintained. All Maximum Ratings may not always be applied simultaneously.

MECHANICAL

Net Weight (Approx.)	7 Ounces
Cooling	Forced air required above 10 watts resonator power input.
Connection:	
Base	3 Pin Pee Wee (JEDEC A3-1)
Reflector	Miniature Cap (JEDEC C1-4)
Mounting	Mates with UG 39/U
Tuner	Single Screw, Slotted Shaft



ACTUAL SIZE

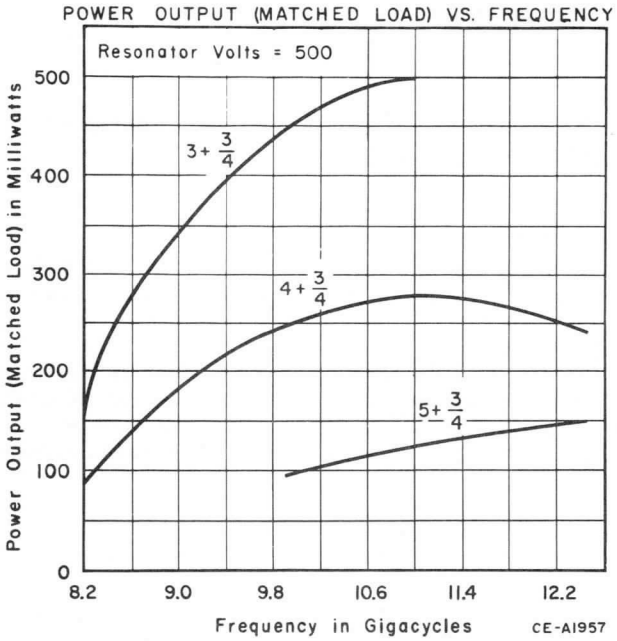

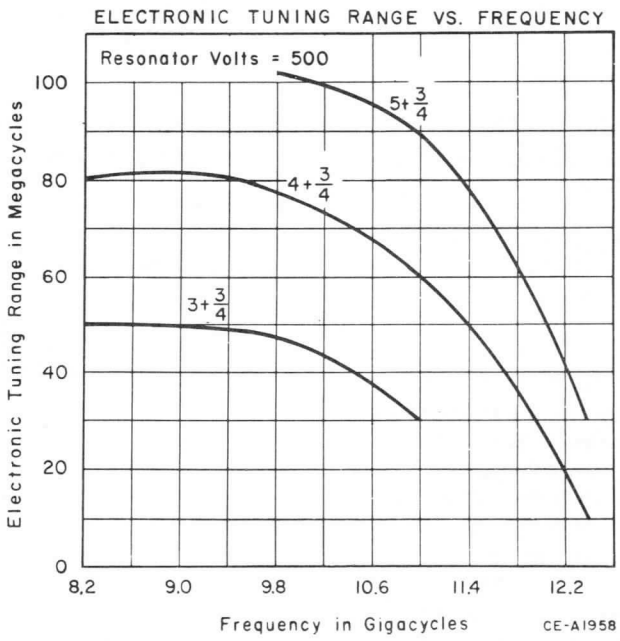

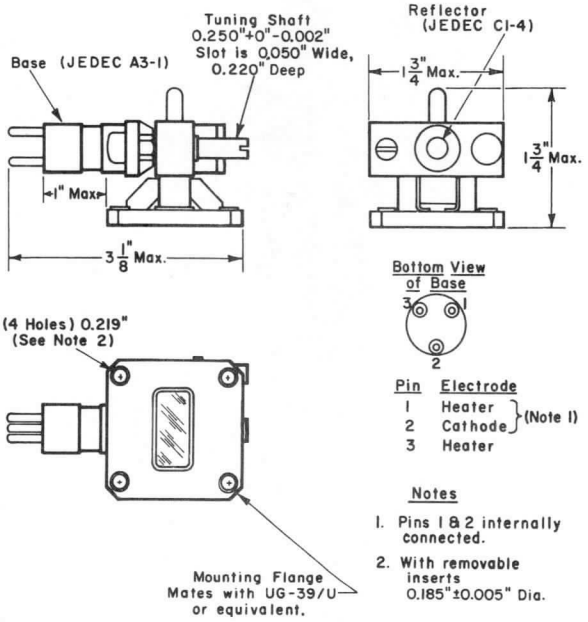

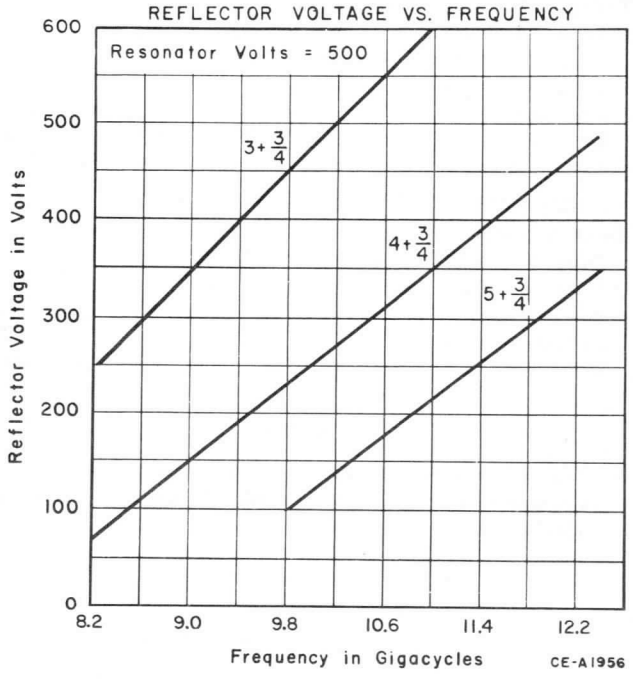

The information contained herein is supplied without assuming responsibility for infringement of patents or other rights of third parties which may result from its use. No license is granted by implication or otherwise under any patent or patent rights of Westinghouse Electric Corporation.

April 1, 1964

REFLEX KLYSTRON TYPE WL-135
10.525 Gc.

The WL-135 is an integral cavity, fixed frequency reflex klystron, designed for service in low power transmitter applications.

MECHANICAL

Net Weight (Approx.)	6 Ounces
Cooling	Forced air required above 13 watts resonator power input.
Connection	Flying Leads
Mounting	Mates with UG 39/U Flange

ELECTRICAL

Cathode	Coated Unipotential	
Heater:		
Voltage	6.3	Volts
Current	1.2	Amperes
Frequency	10.525 Gc. ± 25 Mc.	

MAXIMUM RATINGS (Note 1)

Absolute Maximum Values

Beam Voltage	400 max.	Volts
Reflector Voltages	−10 to −1000 max.	Volts
Heater Voltage	7.0 max.	Volts
Cathode Current	50 max.	Ma.
Body Temperature	200 max.	°C

TYPICAL OPERATION AT 10.525 Gc.

Resonator Volts = 300	Min.	Ave.	Max.	
Power Output	75	120	–	mW.
Electronic Tuning Range	25	32	–	Mc.
Beam Current	–	26	45	Ma.
Reflector Voltage	−150	−190	−250	Volts
Heater Current	1.08	1.20	1.32	Amperes

NOTE

1. The given Maximum Ratings must not be exceeded if performance characteristics are to be maintained. All Maximum Ratings may not always be applied simultaneously.

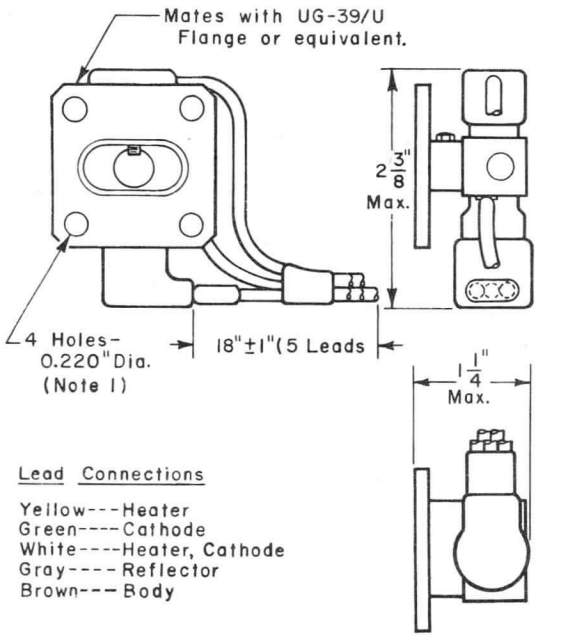

Lead Connections

Yellow---Heater
Green----Cathode
White----Heater, Cathode
Gray----Reflector
Brown---Body

Notes:

1. With Removable Inserts 0.185" ±0.005" Diameter.
2. Green and White Lead Are Internally Connected.

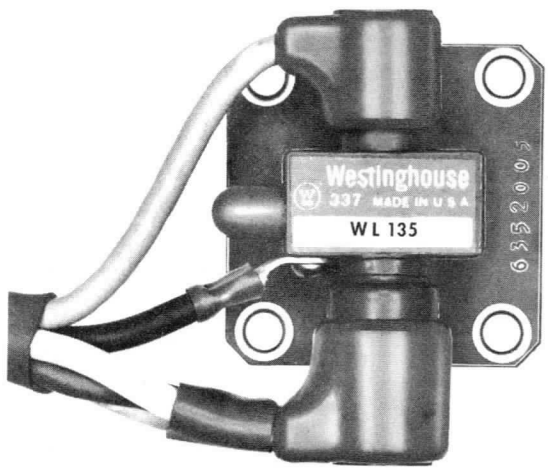

ACTUAL SIZE

The information contained herein is supplied without assuming responsibility for infringement of patents or other rights of third parties which may result from its use. No license is granted by implication or otherwise under any patent or patent rights of Westinghouse Electric Corporation.

REFLEX KLYSTRON TYPE WL-139

The WL-139 is an integral cavity, reflex klystron with waveguide output and is tunable from 8,500 to 10,000 Mc. The tube is tuned with a lock-nut type tuner.

MECHANICAL

Net Weight (Approx.)	7 Ounces
Connection	Viking Connector No. VP 5/2AA1
Mounting	Mates with UG 39/U or UG 40A/U Flange
Tuner	Lock-nut
Mounting Position	Any

ELECTRICAL

Cathode	Coated Unipotential
Heater:	
Voltage	6.3 Volts
Current	1.2 Amperes
Frequency (Note 1)	Tunable from 8.5 to 10.0 Gc.

MAXIMUM RATINGS (Note 2)

Absolute Maximum Values

Beam Voltage	350 max.	Volts
Reflector Voltage	-10 to -1000 max.	Volts
Heater Voltage	7.0 max.	Volts
Cathode Current	42 max.	Ma.
Body Temperature	200 max.	°C

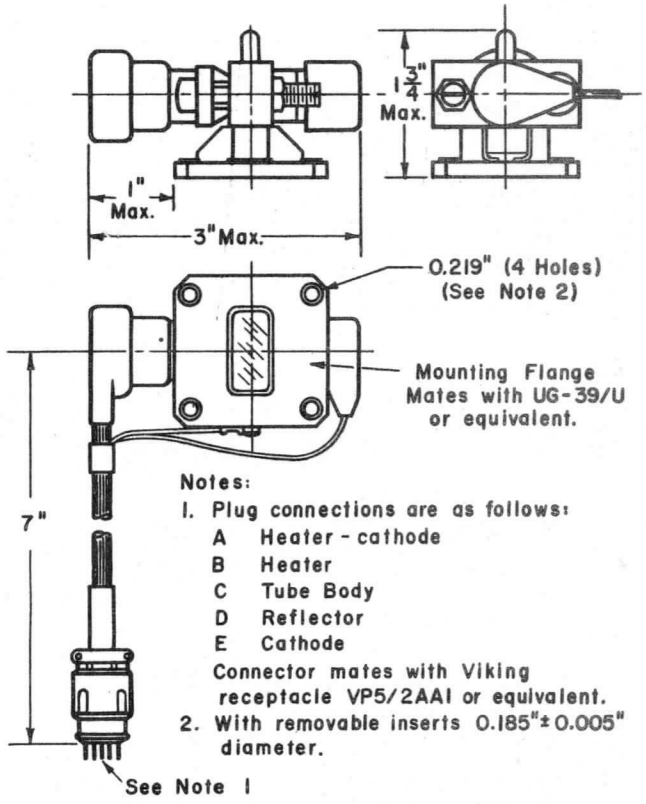

Notes:

1. Plug connections are as follows:
   - A Heater - cathode
   - B Heater
   - C Tube Body
   - D Reflector
   - E Cathode

   Connector mates with Viking receptacle VP5/2AA1 or equivalent.
2. With removable inserts 0.185" ± 0.005" diameter.

WESTINGHOUSE ELECTRIC CORPORATION, ELECTRONIC TUBE DIVISION, ELMIRA, NEW YORK

Elmira, New York
P.O. Box 284
REgent 9-3611

Bloomfield, New Jersey
MacArthur Avenue
HUmbolt 4-3000

Boston, Massachusetts
10 High Street
Liberty 2-0600

Chicago 9, Illinois
2211 W. Pershing Road
WHitehall 4-3860

Detroit 32, Michigan
P.O. Box 502
TRinity 2-7010

Los Angeles 17, California
600 St. Paul Avenue
HUntley 2-9660

Washington 6, D.C.
1625 K Street, N.W.
NAtional 8-8843

San Lorenzo, California
2222 Grant Avenue
BRowning 6-1800

TYPICAL OPERATION

Ers = 200 volts; Ef - 6.3 volts

Frequency (Kmc)	8.5			9.3			10.0		
	Min.	Ave.	Max.	Min.	Ave.	Max.	Min.	Ave.	Max.
Power Output	15	23	-	15	23	-	15	22	-
Electronic Tuning Range	20	55	-	20	43	-	20	28	-
Beam Current	-	17.5	23	-	17.5	23	-	17.5	23
Reflector Voltage	-56	-85	-112	-87	-118	-148	-113	-152	-181
Heater Current	1.08	1.20	1.32	1.08	1.20	1.32	1.08	1.20	1.32

Ers = 300 volts; Ef - 6.3 volts

Frequency (Kmc)	8.5			9.0			10.0		
	Min.	Ave.	Max.	Min.	Ave.	Max.	Min.	Ave.	Max.
Power Output	25	75	-	40	87	-	40	93	-
Electronic Tuning Range	30	58	-	30	55	-	30	42	-
Beam Current	20	27	38	20	27	38	20	27	38
Reflector Voltage	-85	-110	-135	-110	-135	-165	-160	-190	-225
Heater Current	1.08	1.20	1.32	1.08	1.20	1.32	1.08	1.20	1.32

NOTES

1. Tube is supplied set to 9000 ± 30 megacycles.
2. The given maximum ratings must not be exceeded if performance characteristics are to be maintained. All maximum ratings may not always be applied simultaneously.

REFLEX KLYSTRON TYPE WL-141
13.5 ± 0.050 Gc.

The WL-141 is an integral cavity, single-screw tuned, reflex klystron, designed for service in low-power transmitter applications.

MECHANICAL

Net Weight (Approx.)	6 Ounces
Cooling	Forced air required above 10 watts resonator power input.
Connection:	
Base	3-Pin Pee Wee (JEDEC A3-1)
Reflector	Miniature Cap (JEDEC C1-4)
Mounting	Mates with UG-419/U Flange
Tuner	Single Screw Slotted Shaft

ELECTRICAL

Cathode	Coated Unipotential	
Heater:		
Voltage	6.3	Volts
Current	0.45	Amperes
Frequency	13.500 ± 0.050	Gc.

MAXIMUM RATINGS (Note 1)

Absolute Maximum Values

Beam Voltage	625 max.	Volts
Reflector Voltage	−20 to −1000 max.	Volts
Heater Voltage	7.0 max.	Volts
Cathode Current	70 max.	Ma.
Body Temperature	120 max.	°C

TYPICAL OPERATION AT 13.5 Gc.

Resonator Volts = 600	Min.	Ave.	Max.	
Power Output (Note 2)	385	450	–	mW.
Electronic Tuning Range	50	70	–	Mc.
Beam Current	–	65	70	Ma.
Reflector Voltage	−350	−450	−500	Volts
Heater Current	0.400	0.450	0.500	Amperes

NOTES

1. The given Maximum Ratings must not be exceeded if performance characteristics are to be maintained. All Maximum Ratings may not always be applied simultaneously.
2. Oscillation tests are made with the tube rigidly connected to UG-419/U flange with a load VSWR of 1.2 through worst phase.

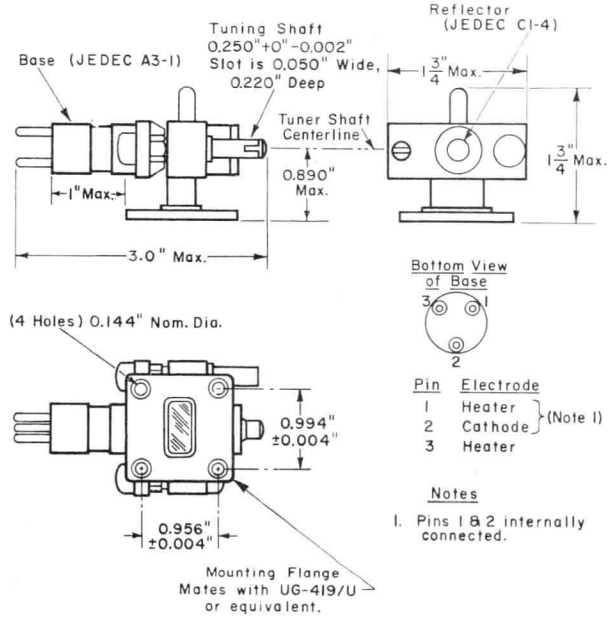

The information contained herein is supplied without assuming responsibility for infringement of patents or other rights of third parties which may result from its use. No license is granted by implication or otherwise under any patent or patent rights of Westinghouse Electric Corporation.

PRINTED IN U.S.A. Microwave Tube Section

WESTINGHOUSE ELECTRIC CORPORATION, ELECTRONIC TUBE DIVISION, ELMIRA, NEW YORK

Westinghouse

WL-146

November 15, 1964

REFLEX KLYSTRON TYPE WL-146
10.518 Gc.

The WL-146 is an integral cavity, fixed tuned, reflex klystron, designed for service in Police Radar Application.

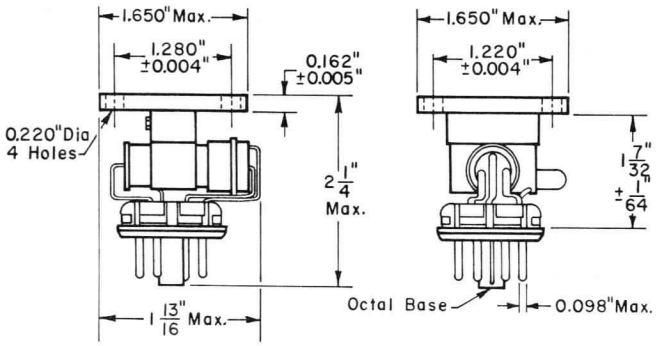

PIN	CONNECTION
1	Ground
2	Heater
3	Ground
4	N.C.
5	Reflector
6	Ground
7	Heater
8	Cathode

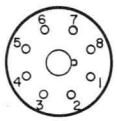

MECHANICAL

Net Weight (Approx.)	3.5 Ounces
Cooling	Forced air required above 12 watts resonator power input.
Connection:	
Base	Octal
Mounting	Mates with UG-39/U

ELECTRICAL

Cathode	Coated Unipotential	
Heater:		
Voltage	5.7	Volts
Current	0.45	Amperes
Frequency	10.510 to 10.525	Gc.

MAXIMUM RATINGS (Note 1)

Absolute Maximum Values

Beam Voltage	350 max.	Volts
Reflector Voltage	−10 to −1000 max.	Volts
Heater Voltage	7.0 max.	Volts
Cathode Current	45 max.	Ma.
Body Temperature	110 max.	°C

TYPICAL OPERATION AT 10.518 Gc.

Resonator Volts = 250

	Min.	Ave.	Max.	
Power Output	20	32	–	mW.
Electronic Tuning Range	25	52	–	Mc.
Beam Current	14	20	25	Ma.
Reflector Voltage	−50	−70	−90	Volts
Heater Current	–	0.45	0.5	Amperes

NOTE

1. The given Maximum Ratings must not be exceeded if performance characteristics are to be maintained. All Maximum Ratings may not always be applied simultaneously.

The information contained herein is supplied without assuming responsibility for infringement of patents or other rights of third parties which may result from its use. No license is granted by implication or otherwise under any patent or patent rights of Westinghouse Electric Corporation.

November 15, 1964

REFLEX KLYSTRON TYPE WL-147
10.525 Gc.

The WL-147 is an integral cavity, fixed tuned, reflex klystron, designed for service in Police Radar Application.

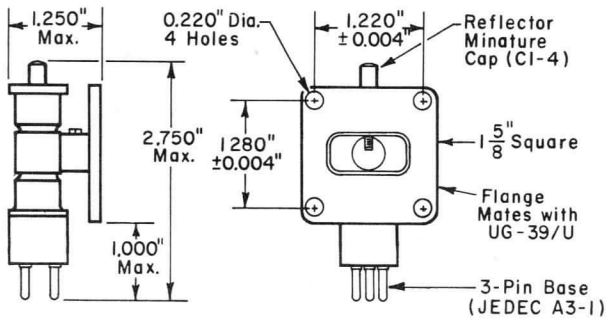

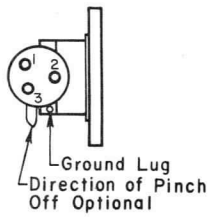

CONTACT PINS
Pin 1 ···· Heater Pin 2 ··· Cathode Pin 3 ··· Heater
Pin 1 & 2 Are Internally Connected

MECHANICAL

Net Weight (Approx.)	3.5 Ounces
Cooling	Forced air required above 12 watts resonator power input.
Connection:	
Base	.3 Pin Pee Wee (JEDEC A3-1)
Reflector	Miniature (JEDEC C1-4)
Mounting	Mates with UG-39/U

ELECTRICAL

Cathode	Coated Unipotential	
Heater:		
Voltage	6.3	Volts
Current	0.45	Amperes
Frequency	10.510 to 10.540	Gc.

MAXIMUM RATINGS (Note 1)

Absolute Maximum Values

Beam Voltage	350 max.	Volts
Reflector Voltage	−10 to −1000 max.	Volts
Heater Voltage	7.0 max.	Volts
Cathode Current	.45 max.	Ma.
Body Temperature	110 max.	°C

TYPICAL OPERATION AT 10.525 Gc.

Resonator Volts = 300	Min.	Ave.	Max.	
Power Output Matched Load	75	100	–	mW.
Electronic Tuning Range	25	37	–	Mc.
Beam Current	–	25	40	Ma.
Reflector Voltage	−150	−200	−220	Volts
Heater Current	–	0.45	0.5	Amperes

NOTE

1. The given Maximum Ratings must not be exceeded if performance characteristics are to be maintained. All Maximum Ratings may not always be applied simultaneously.

The information contained herein is supplied without assuming responsibility for infringement of patents or other rights of third parties which may result from its use. No license is granted by implication or otherwise under any patent or patent rights of Westinghouse Electric Corporation.

November 15, 1964

REFLEX KLYSTRON TYPE WL-148
10.525 Gc.

The WL-148 is an integral cavity, fixed tuned, reflex klystron, designed for service in Police Radar Application.

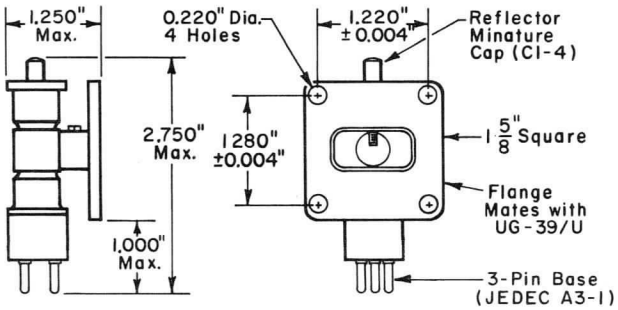

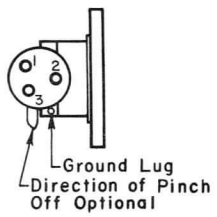

CONTACT PINS
Pin 1···Heater
Pin 2···Cathode
Pin 3···Heater

MECHANICAL

Net Weight (Approx.)	3.5 Ounces
Cooling	Forced air required above 12 watts resonator power input.
Connection:	
Base	3 Pin Pee Wee (JEDEC A3-1)
Reflector	Miniature (JEDEC C1-4)
Mounting	Mates with UG-39/U

ELECTRICAL

Cathode	Coated Unipotential	
Heater:		
Voltage	6.3	Volts
Current	0.45	Amperes
Frequency	10.515 to 10.535	Gc.

MAXIMUM RATINGS (Note 1)

Absolute Maximum Values

Beam Voltage	350 max.	Volts
Reflector Voltage	−10 to −1000 max.	Volts
Heater Voltage	7.0 max.	Volts
Cathode Current	45 max.	Ma.
Body Temperature	110 max.	°C

TYPICAL OPERATION AT 10.525 Gc.

Resonator Volts = 300	Min.	Ave.	Max.	
Power Output Matched Load	75	100	–	mW.
Electronic Tuning Range	25	37	–	Mc.
Beam Current	–	25	40	Ma.
Reflector Voltage	−150	−200	−250	Volts
Heater Current	–	0.45	0.50	Amperes

NOTE

1. The given Maximum Ratings must not be exceeded if performance characteristics are to be maintained. All Maximum Ratings may not always be applied simultaneously.

The information contained herein is supplied without assuming responsibility for infringement of patents or other rights of third parties which may result from its use. No license is granted by implication or otherwise under any patent or patent rights of Westinghouse Electric Corporation.

REFLEX KLYSTRON TYPE WL-149
7.1 to 8.5 Gc.

The WL-149 is an integral cavity, single screw tuned, reflex klystron, tunable from 7.1 to 8.5 Gc., designed for service in test equipment and general laboratory uses. Gold plated surfaces are provided for the attachment of r-f filter devices.

MECHANICAL

Net Weight (Approx.)	7 Ounces
Cooling	Forced air required above 10 watts resonator power input.
Connection:	
Base	3 Pin Pee Wee (JEDEC A3-1)
Reflector	Miniature Cap (JEDEC C1-4)
Mounting	Mates with UG 51/U
Tuner	Single Screw

ELECTRICAL

Cathode	Coated Unipotential
Heater:	
Voltage	6.3 Volts
Current	0.45 Amperes
Frequency	Tunable from 7.1 to 8.5 Gc.

MAXIMUM RATINGS (Note 1)

Absolute Maximum Values

Beam Voltage	550 max.	Volts
Reflector Voltage	−20 to −1000 max.	Volts
Heater Voltage	7.0 max.	Volts
Cathode Current	65 max.	Ma.
Body Temperature	200 max.	°C

TYPICAL OPERATION AT 7.1 Gc.

Resonator Volts = 400	Min.	Ave.	Max.	
Power Output	80	100	–	mW.
Electronic Tuning Range	15	40	–	Mc.
Resonator Current	–	34	50	Ma.
Reflector Voltage	−100	−120	−350	Volts
Heater Current	0.40	0.45	0.50	Amperes

TYPICAL OPERATION AT 7.8 Gc.

Resonator Volts = 400	Min.	Ave.	Max.	
Power Output	80	180	–	mW.
Electronic Tuning Range	15	36	–	Mc.
Resonator Current	–	34	50	Ma.
Reflector Voltage	−100	−200	−350	Volts
Heater Current	0.40	0.45	0.50	Amperes
Reflector Modulation Sensitivity	0.3	0.8	2.5	Mc.

TYPICAL OPERATION AT 8.5 Gc.

Resonator Volts = 400	Min.	Ave.	Max.	
Power Output	80	160	–	mW.
Electronic Tuning Range	15	30	–	Mc.
Resonator Current	–	34	50	Ma.
Reflector Voltage	−100	−280	−350	Volts
Heater Current	0.40	0.45	0.50	Amperes

NOTE

1. The given Maximum Ratings must not be exceeded if performance characteristics are to be maintained. All Maximum Ratings may not always be applied simultaneously.

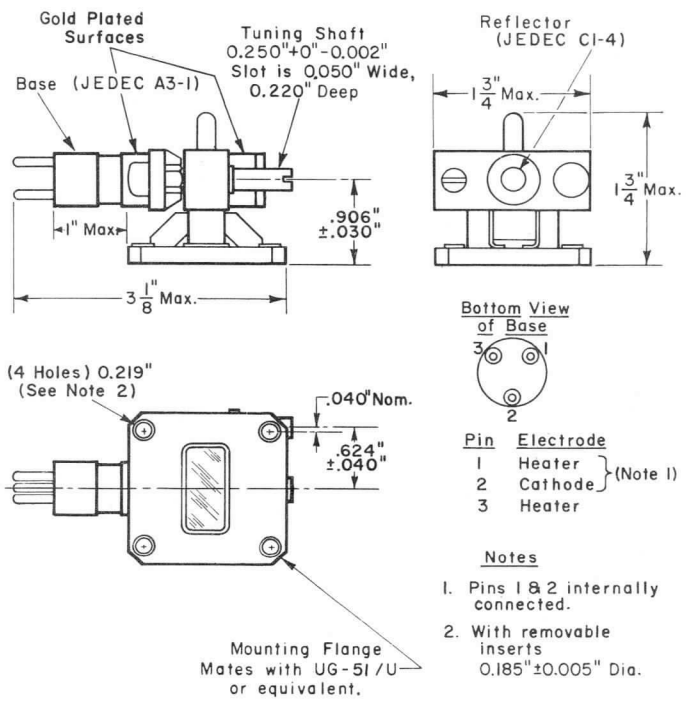

Pin	Electrode	
1	Heater	(Note 1)
2	Cathode	(Note 1)
3	Heater	

Notes

1. Pins 1 & 2 internally connected.
2. With removable inserts 0.185"±0.005" Dia.

TRAVELING WAVE TUBE WL-167

10 KW Peak Power Output | .025 Duty Cycle | 5.4 to 5.9 KMC

The WL-167 is a pulsed traveling wave amplifier tube providing 10 KW peak power output with 40 db gain in the frequency range of 5400 to 5900 megacycles. A high mu gridded gun is used which permits modulation of the beam with a 500 volt applied grid pulse. Maximum duty cycle is .025. An insulated water cooled collector which can be depressed for efficiency enhancement, with cooling water in contact with ground potential elements only, is provided.

The tube is of metal-ceramic construction and includes an integral temperature compensated periodic permanent magnet focusing structure. The complete tube package weighs 14 pounds.

The tube is designed for reliable, long life operation in military environments. A continuously operating ion pump is included to minimize degradation of characteristics over extended service life. Particular emphasis has been placed on phase characteristics for use in applications such as phased array radar systems.

ELECTRICAL CHARACTERISTICS

Frequency	5400 to 5900	mc.
Heater:		
Voltage	12	Volts
Current	2.5	Amperes
Saturated Power Output, Peak	10	KW
Gain at Saturated Power Output	40	db
Duty Cycle, Max.	.025	–
Pulse Width, Max.	5	μsec.
Focusing Method	Integral periodic permanent magnet temperature compensated.	
Cold Insertion Loss, Min.	100	db

MECHANICAL RATINGS

Mounting Position	Any
Dimensions:	
Length	24"
Diameter (Not Including Connectors)	2-5/8"
Weight	14 lbs.
RF Connectors	Special 50 ohm coax.
Cooling:	
Water, at Ground Potential	.3 gpm at 10 psi pressure drop
Coolant Temperature	50° to 100°F
Shock	30G

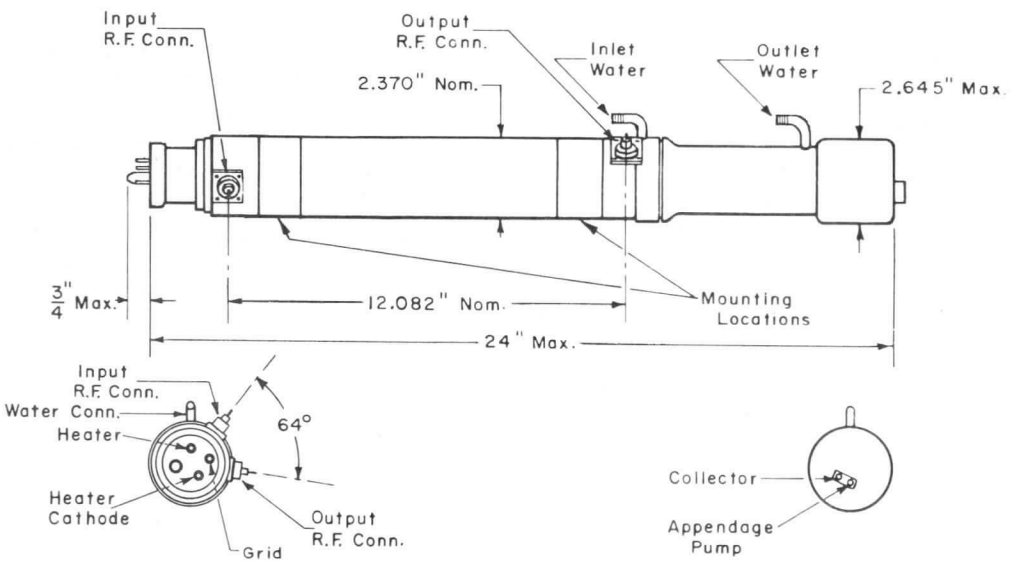

MAXIMUM RATINGS

Heater Voltage (Note 5)	14	max.	Volts
	10	min.	Volts
Anode-Circuit Voltage	25	max.	KV
	22	min.	KV
Grid Bias Voltage	−500	max.	Volts
	−220	min.	Volts
Grid Voltage for Beam on (Note 3)	250	max.	Volts
Collector Voltage (Note 2)	25	max.	KV
	11	min.	KV
Generator and Load VSWR	1.6	max.	–
Duty Cycle	.025	max.	–
Pulse Width	5	max.	μsec.
Heater Warm Up Time	300	min.	sec.
Ambient Temperature (Note 7)	180	max.	°F
	0	min.	°F
Appendage Pump Voltage	5.5	max.	KV
	2.2	min.	KV
Anode-Circuit Dissipation (Note 6)	1	max.	KW
Collector Dissipation	1	max.	KW
Grid Current, Peak	0.9	max.	Amps.
Collector Current	4.0	max.	Amps.

TYPICAL OPERATION

Electrical:		
Heater Voltage	12	Volts
Heater Current	2.5	Amps.
Anode-Circuit Voltage (Note 1)	24	KV
Anode-Circuit Current, Peak		
No RF Drive	0.6	Amps.
at Saturated Power Output	1.5	Amps.
Collector Voltage (Note 2)	12.5	KV
Collector Current, Peak		
No RF Drive	3.5	Amps.
at Saturated Power Output	2.4	Amps.
Grid Voltage:		
Beam Cut off	−250	Volts
Beam Pulsed on (Note 3)	210	Volts
Grid Current, Peak	0.6	Amps.
Appendage Pump Voltage (Note 4)	+3 KV with respect to collector	
Appendage Pump Current	3	μamp.
Duty Cycle	.01	–
Pulse Width	5	μsec.
Mechanical:		
Cooling:		
Coolant	Water	
Flow	0.3 gpm	
Pressure Drop	10 psi	
Inlet Temperature	60°F	
Mounting	by means of yokes and/or straps on 2 locations provided on 2.370" dia.	

PERFORMANCE

Frequency Range	5.4 to 5.9	KMC
Power Output, Peak	10	KW
Gain at 10 KW Power Output	40	db

NOTES

1. The anode and slow wave structure are electrically connected internally. The inner and outer conductors of the coax RF connectors, and the water fittings are also electrically connected to this structure. Therefore the anode (or circuit) is normally operated at ground potential, and the cathode at −24 KV. All voltages are referenced to cathode in the ratings, except the appendage pump, which is referenced to collector.

2. The collector is electrically insulated from the circuit and cooling water system, and may be depressed to reduce power applied in the beam. Operation without depression results in less shift in current from collector to circuit at saturated power output and any collector voltage within the maximum ratings can be used provided the collector dissipation rating is not exceeded.

3. Grid bias voltage may be any value within the maximum ratings. For proper tube operation, the applied grid pulse voltage should be adjusted to give a total of 4.1 amps. peak current to the collector and circuit. This occurs at a grid voltage between 170 and 250 volts.

4. The appendage pump is physically attached to the collector and the negative pump connection is common with the collector connection. The 3 KV should be provided with poor regulation such that current is limited to approx. 4 ma. After long storage, pump starting currents in excess of 100 μ amps. may be encountered; in normal operation, pump current is proportional to tube pressure and operation at pump currents above 10 μ amps. may indicate improper operation (violation of maximum ratings) and result in arcing and tube damage.

5. Normal tube performance and life will be obtained when heater voltage is maintained at 12 volts ± 3%.

6. The maximum circuit dissipation is allowed when tube is operating properly. The maximum dissipation can rapidly destroy the tube if it is incorrectly distributed due to such causes as high grid voltage, high RF input power, and high load VSWR.

7. At ambient temperatures above 120°F and/or where convection air currents are restricted in the gun region, a flow of air (10CFM) onto the gun in the connector region must be provided.

The WL-167 was designed and is being produced for a specific application. Additional performance information can be provided when required. Variations of the basic tube type can be provided where applications justify such changes. Inquiries are invited.

The information contained herein is supplied without assuming responsibility for infringement of patents or other rights of third parties which may result from its use. No license is granted by implication or otherwise under any patent or patent rights of Westinghouse Electric Corporation.

Westinghouse

WL-177

June 1, 1963

HIGH POWER TRIMMABLE REFLEX KLYSTRON TYPE WL-177

The WL-177 is an integral cavity, fixed frequency, X-band, reflex klystron designed to render reliable service in severe environments. The WL-177 is factory adjusted to the frequency specified in the data and the user can vary it ± 100 megacycles. The WL-177 can be used as the transmitting tube in microwave systems and as a pump oscillator for parametric amplifiers.

ELECTRICAL

Cathode	Coated Unipotential
Heater:	
Voltage	6.3 Volts
Current	1.2 Amperes
Frequency (Trimmable ± 100 Mc):	
WL-177A	8.6 Gc.
WL-177B	8.8 Gc.
WL-177C	9.0 Gc.
WL-177D	9.2 Gc.
WL-177E	9.4 Gc.
WL-177F	9.6 Gc.
WL-177G	9.8 Gc.
WL-177H	10.0 Gc.
WL-177J	10.2 Gc.
WL-177K	10.4 Gc.
WL-177L	10.6 Gc.
WL-177M	10.8 Gc.
WL-177N	11.0 Gc.

MAXIMUM RATINGS (Note 1)

Absolute Maximum Values

Beam Voltage	550 max.	Volts
Reflector Voltage	−10 to −1000 max.	Volts
Heater Voltage	7.0 max.	Volts
Cathode Current	65 max.	mA
Body Temperature	200 max.	°C

TYPICAL OPERATION (Note 2)

Resonator Volts = 500	Min.	Ave.	Max.	
Power Output	500	780	–	mW
Electronic Tuning Range	40	55	–	Mc
Beam Current	–	52	60	mA
Reflector Voltage	−275	−300	−325	Volts
Heater Current	1.08	1.20	1.32	Amp.
Residual FM	–	0.06	0.1	Mc.
Heater Voltage Sensitivity	–	0.5	5	Mc./V
Temperature Coefficient	−0.150	−0.05	+0.150	Mc./°C
Vibration 10G (50 to 1000 cps)	–	0.08	0.25	Mc.

NOTES

1. The given maximum ratings must not be exceeded if performance characteristics are to be maintained. All maximum ratings may not always be applied simultaneously.
2. Data applies to type WL-177G. (9.8 Gc.) Data for others is similar except for frequency and reflector voltage.

MECHANICAL

Net Weight (Approx.)	8 Ounces
Cooling	Forced air required above 10 watts resonator power input.
Connections	Flying Leads
Trimming Adjustment	Diff. Screw, Hex Head
Mounting	Mates with UG-39/U Flange
Vibration (50 to 1000 cps)	10G
Shock	150G

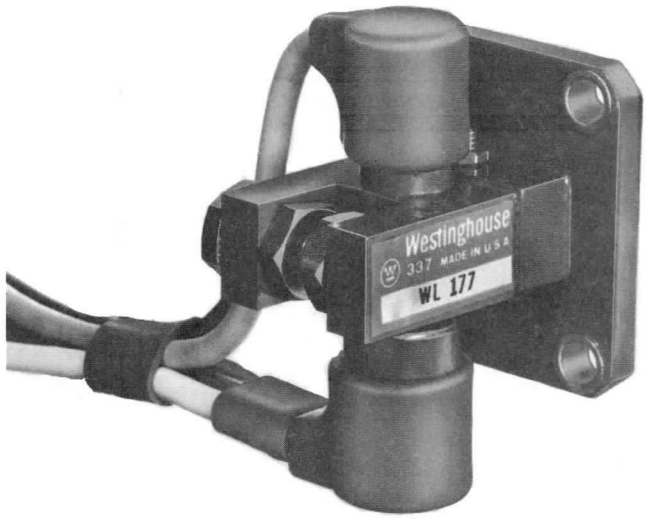

ACTUAL SIZE

PRINTED IN U.S.A.

Microwave Devices Section

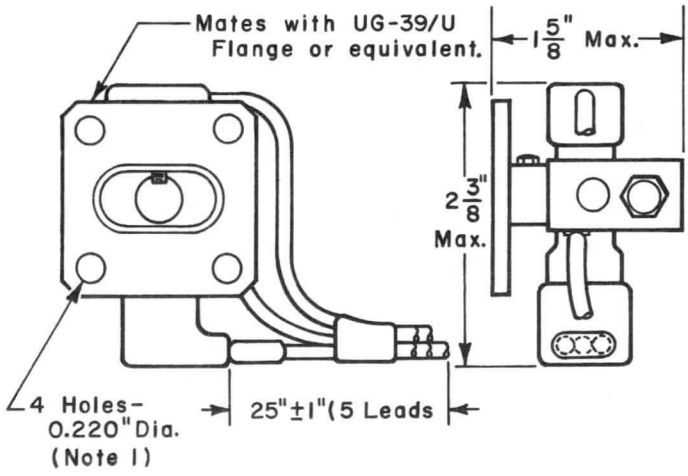

Lead Connections

Yellow---Heater
Green----Cathode
White----Heater, Cathode
Gray----Reflector
Brown---Body

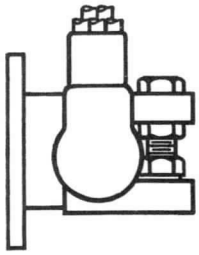

Notes:

1. With Removable Inserts 0.185" ±0.005" Diameter.
2. Green and White Lead Are Internally Connected.

The information contained herein is supplied without assuming responsibility for infringement of patents or other rights of third parties which may result from its use. No license is granted by impli cation or otherwise under any patent or patent rights of Westinghouse Electric Corporation.

TRIMMABLE REFLEX KLYSTRON TYPE WL-186

The WL-186 is an integral cavity, fixed frequency X-band, reflex klystron, designed for service with low operating voltages. The WL-186 is factory adjusted to the frequency specified in the data and the user can vary it ± 100 Mc.

MECHANICAL

Net Weight (Approx.)	8 Ounces
Cooling	Forced air required above 10 watts resonator power input.
Connections	Resonator: C1-3 Cap, Cathode: A3-1 Base
Mounting	Mates with UG-39/U
Trimming Adjustment	Diff. Screw, Hex Head

ELECTRICAL

Cathode	Coated Unipotential
Heater:	
Voltage	6.3 Volts
Current	0.45 Amperes
Frequency (Trimmable ± 100 Mc.)	
WL-186A	8.6 Gc.
WL-186B	8.8 Gc.
WL-186C	9.0 Gc.
WL-186D	9.2 Gc.
WL-186E	9.4 Gc.
WL-186F	9.6 Gc.
WL-186G	9.8 Gc.
WL-186H	10.0 Gc.
WL-186J	10.2 Gc.
WL-186K	10.4 Gc.
WL-186M	10.6 Gc.
WL-186N	10.8 Gc.
WL-186P	11.0 Gc.

MAXIMUM RATINGS (Note 1)

Absolute Maximum Values

Beam Voltage	400 max.	Volts
Reflector Voltage	−10 to −1000 max.	Volts
Heater Voltage	7.0 max.	Volts
Cathode Current	50 max.	Ma.
Body Temperature	200 max.	°C

TYPICAL OPERATION AT 11.0 Gc. (Applies to Type WL-186P)

Resonator Volts = 300	Min.	Ave.	Max.	
Power Output	60	110	–	mW.
Electronic Tuning Range	25	32	–	Mc.
Beam Current	–	27	35	Ma.
Reflector Voltage	−270	−300	−340	Volts
Heater Current	0.40	0.45	0.50	Amperes
Temperature Coefficient	−200	−50	+200	Kc/°C

NOTE

1. The given Maximum Ratings must not be exceeded if performance characteristics are to be maintained. All Maximum Ratings may not always be applied simultaneously.

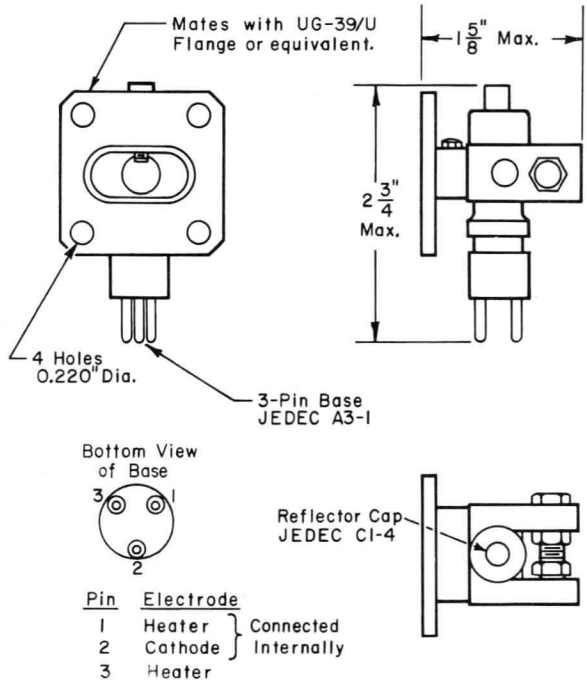

The information contained herein is supplied without assuming responsibility for infringement of patents or other rights of third parties which may result from its use. No license is granted by implication or otherwise under any patent or patent rights of Westinghouse Electric Corporation.

REFLEX KLYSTRON WL-187
8.45 to 10.05 GC

The WL-187 is an integral cavity, single-screw tuned, reflex klystron, tunable from 8.45 to 10.05 Gc., designed for service in signal generator and laboratory applications where ease of tuning is required. Satisfactory operation is obtained with low or medium resonator voltages.

ELECTRICAL

Cathode	Coated Unipotential	
Heater:		
Voltage	6.3	Volts
Current	1.2	Amperes
Frequency	Tunable from 8.45 to 10.05 Gc.	

MAXIMUM RATINGS (Note 1)

Absolute Maximum Values

Beam Voltage	400 max.	Volts
Reflector Voltage	−10 to −1000 max.	Volts
Heater Voltage	7.0 max.	Volts
Cathode Current	60 max.	Ma.
Body Temperature	200 max.	°C

TYPICAL OPERATION AT 8.45 Gc.

Resonator Volts = 350	Min.	Ave.	Max.	
Power Output (Optimum Load)	65	90	–	mW.
Power Output (Matched Load)	35	70	–	mW.
Electronic Tuning Range	–	65	–	Mc.
Beam Current	–	36	55	Ma.
Reflector Voltage	−150	−158	−300	Volts
Heater Current	1.08	1.20	1.32	Amperes

TYPICAL OPERATION AT 9.3 Gc.

Resonator Volts = 350	Min.	Ave.	Max.	
Power Output (Optimum Load)	65	120	–	mW.
Power Output (Matched Load)	35	90	–	mW.
Electronic Tuning Range	–	62	–	Mc.
Beam Current	–	36	55	Ma.
Reflector Voltage	−150	−220	−300	Volts
Heater Current	1.08	1.20	1.32	Amperes
Residual FM	–	0.06	0.1	Mc.
Heater Voltage Sensitivity	–	0.5	4.0	Mc/Volt
Vibration 10 G −50 to 600 Cycles	–	2.0	4.0	Mc.

TYPICAL OPERATION AT 10.05 Gc.

Resonator Volts = 350	Min.	Ave.	Max.	
Power Output (Optimum Load)	65	110	–	mW.
Power Output (Matched Load)	35	80	–	mW.
Electronic Tuning Range	–	53	–	Mc.
Beam Current	–	36	55	Ma.
Reflector Voltage	−150	−283	−300	Volts
Heater Current	1.08	1.20	1.32	Amperes

NOTE

1. The given Maximum Ratings must not be exceeded if performance characteristics are to be maintained. All Maximum Ratings may not always be applied simultaneously.

MECHANICAL

Net Weight (Approx.)	7 Ounces
Cooling	Forced air required above 10 watts resonator power input.
Connections:	
Base	Peewee 3-Pin (JEDEC A3-1)
Reflector	Miniature Cap (JEDEC C1-4)
Mounting	Mates with UG 39/U Flange
Tuner	Single Screw
Vibration (50 to 600 cps)	10 G
Shock	100 G

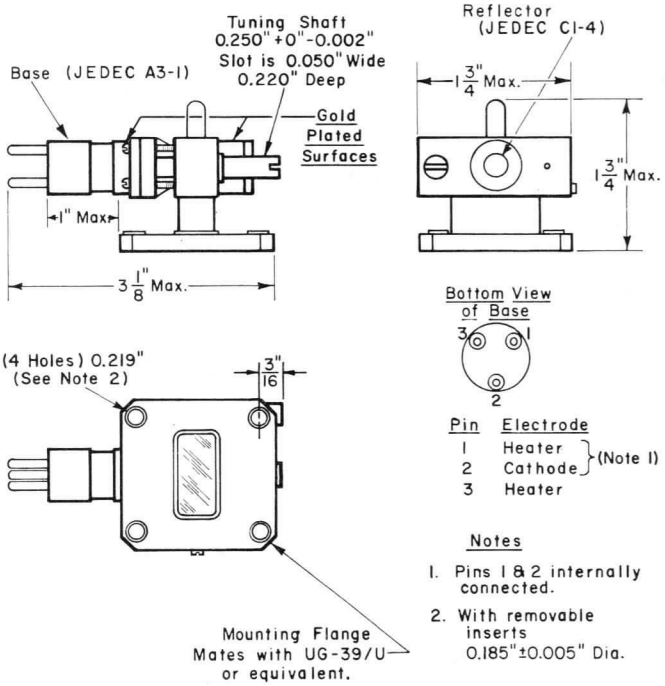

The information contained herein is supplied without assuming responsibility for infringement of patents or other rights of third parties which may result from its use. No license is granted by implication or otherwise under any patent or patent rights of Westinghouse Electric Corporation.

Westinghouse

TENTATIVE DATA

SEVERE ENVIRONMENT REFLEX KLYSTRON TYPE WL-192

The WL-192 is a reflex klystron designed for exceptionally high stability and low noise under extreme environmental conditions. The tube also features fast warm-up and temperature stability as well as minimum frequency deviation under severe vibrational conditions.

The WL-192 has an external-cavity, single-screw tuner with smooth and precise tuning over the range from 9.2 to 10.0 Gc.

The WL-192 is ideal for servo-tuned systems and missile or airborne applications.

MECHANICAL

Net Weight (Approx.)	0.45 Pounds
Connections	Flying Leads
Mounting	Mates with UG-39/U Flange
Tuner	Single Screw
Mounting Position	Any

ELECTRICAL

Cathode	Coated Unipotential
Heater:	
Voltage	6.3 Volts
Current	1.2 Amperes
Frequency	Tunable from 9.2 to 10.0 Gc.

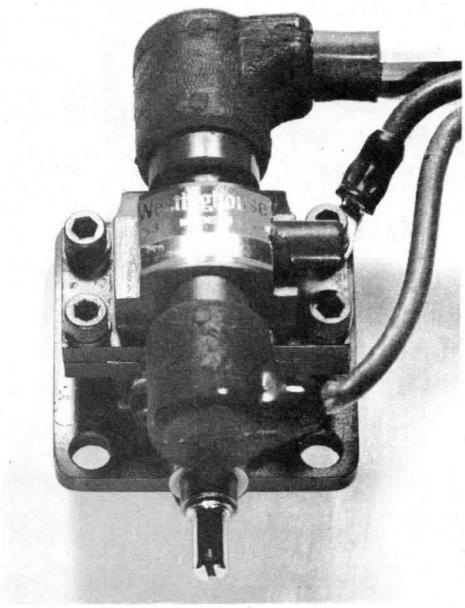

MAXIMUM RATINGS

Absolute Maximum Values

Beam Voltage	375 max.	Volts
Reflector Voltage	-10 to -1000 max.	Volts
Heater Voltage	7.0 max.	Volts
Cathode Current	60 max.	Ma.
Body Temperature	200 max.	°C

WESTINGHOUSE ELECTRIC CORPORATION, ELECTRONIC TUBE DIVISION, ELMIRA, NEW YORK

Elmira, New York
P.O. Box 284
REgent 9-3611

Bloomfield, New Jersey
MacArthur Avenue
HUmbolt 4-3000

Boston, Massachusetts
10 High Street
LIberty 2-0600

Chicago 9, Illinois
2211 W. Pershing Road
WHitehall 4-3860

Detroit 32, Michigan
P.O. Box 502
TRinity 2-7010

Los Angeles 17, California
600 St. Paul Avenue
HUntley 2-9660

Washington 6, D.C.
1625 K Street, N.W.
NAtional 8-8843

San Lorenzo, California
2222 Grant Avenue
BRowning 6-1800

TYPICAL OPERATION
Ers = 350 Volts; Ef = 6.3 Volts

Frequency		9.2			9.6			10.0		Gc.
	Min.	Ave.	Max.	Min.	Ave.	Max.	Min.	Ave.	Max.	
Power Output	155	225	- -	155	225	- -	155	225	- -	mW
Electronic Tuning Range	30	37	- -	30	35	- -	30	35	- -	Mc.
Beam Current	--	40	50	--	40	50	--	40	50	Ma.
Reflector Voltage	-200	-220	--	-220	-250	-270	--	-280	-300	Volts
Heater Current	1.08	1.20	1.32	1.08	1.20	1.32	1.08	1.20	1.32	Amp.

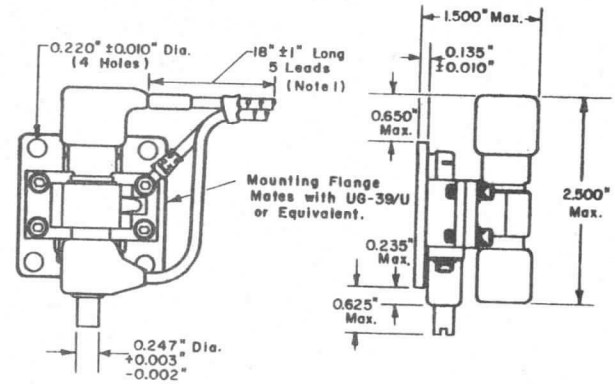

DETAIL OF END OF LEADS

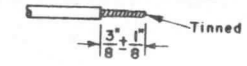

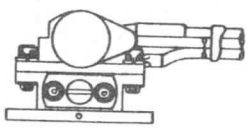

NOTES

1. Connections:
   Yellow - Heater
   White-- Heater & Cathode
   Green-- Cathode
   Gray--- Reflector
   Brown-- Body
   (White & Green internally connected)

February 15, 1962

REFLEX KLYSTRON TYPE WL-6310
8.5 to 10.0 GC

The WL-6310 is an integral cavity, single-screw-tuned, reflex klystron, tunable from 8.5 – 10.0 Gc., designed for service as the local oscillator for airborne radar systems. The versatility of the WL-6310 also makes it suitable for use in signal generator and laboratory applications where ease of tuning is required.

ELECTRICAL

Cathode	Coated Unipotential		
Heater:			
Voltage	6.3		Volts
Current	1.2		Amperes
Frequency	Tunable from 8.5 to 10.0 Gc.		

MAXIMUM RATINGS (Note 1)

Absolute Maximum Values

Beam Voltage	400	max.	Volts
Reflector Voltage	–10 to –1000	max.	Volts
Heater Voltage	7.0	max.	Volts
Cathode Current	60	max.	Ma.
Body Temperature	200	max.	°C

TYPICAL OPERATION AT 8.5 Gc.

Resonator Volts = 300	Min.	Ave.	Max.	
Power Output	25	75	–	mW.
Electronic Tuning Range	30	58	–	Mc.
Beam Current	20	27	32	Ma.
Reflector Voltage	–85	–110	–135	Volts
Heater Current	1.08	1.20	1.32	Amperes

TYPICAL OPERATION AT 9.3 Gc.

Resonator Volts = 300	Min.	Ave.	Max.	
Power Output	25	87	–	mW.
Electronic Tuning Range	30	52	–	Mc.
Beam Current	20	27	32	Ma.
Reflector Voltage	–115	–155	–180	Volts
Heater Current	1.08	1.20	1.32	Amperes
Residual FM	–	0.06	0.1	Mc.
Heater Voltage Sensitivity	–	0.5	6	Mc/Volt
Temperature Coefficient	0	–0.08	–0.20	Mc/°C
Vibration 10 G – 50 to 600 Cycles.	–	2.0	4	Mc.
Shock 200 G	–	0.5	5	Mc.

TYPICAL OPERATION AT 10.0 Gc.

Resonator Volts = 300	Min.	Ave.	Max.	
Power Output	25	93	–	mW.
Electrode Tuning Range	30	42	–	Mc.
Beam Current	20	27	32	Ma.
Reflector Voltage	–160	–190	–225	Volts
Heater Current	1.08	1.20	1.32	Amperes

MECHANICAL

Net Weight (Approx.)	7 Ounces
Cooling	Forced air required above 10 watts resonator power input.
Base	Peewee 3-Pin (JEDEC A3-1)
Reflector	Miniature Cap (JEDEC C1-4)
Mounting	Mates with UG 39/U or UG 40A/U Flange
Tuner	Single Screw
Vibration (50 to 600 cps)	10G
Shock	200G

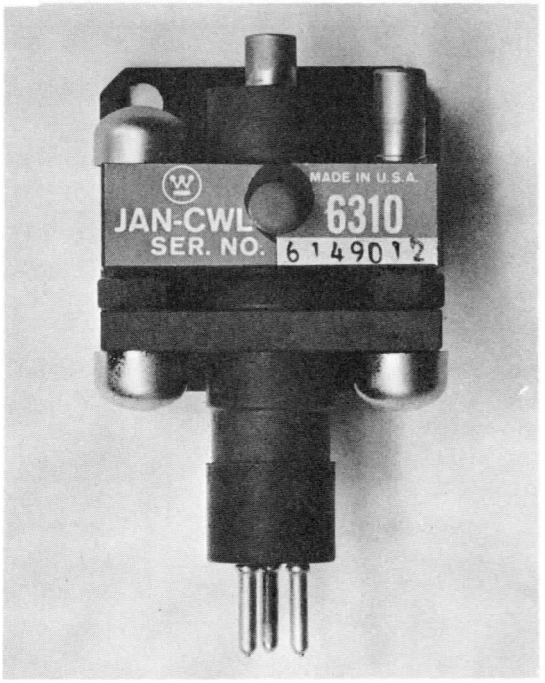

ACTUAL SIZE

NOTE

1. The given Maximum Ratings must not be exceeded if performance characteristics are to be maintained. All Maximum Ratings may not always be applied simultaneously.

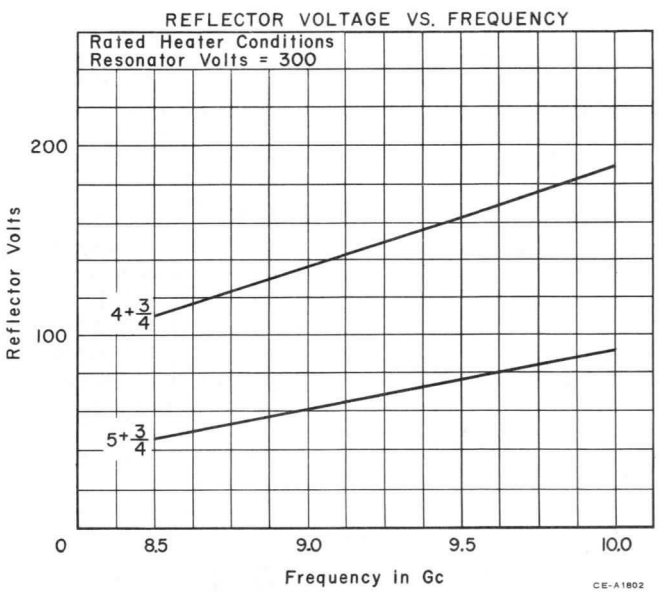

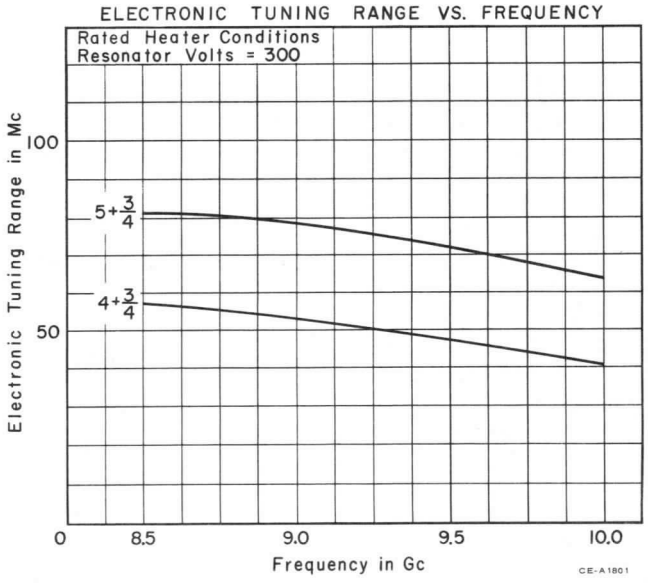

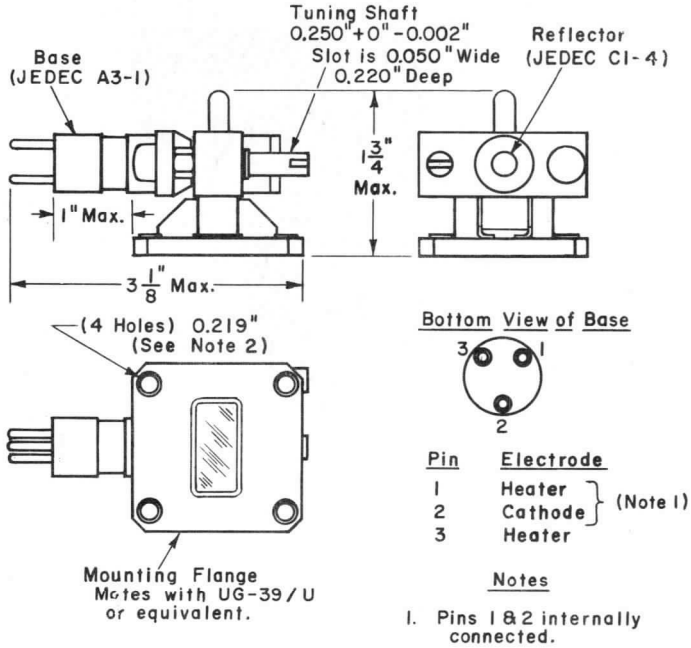

Pin	Electrode	
1	Heater	(Note 1)
2	Cathode	(Note 1)
3	Heater	

Notes

1. Pins 1 & 2 internally connected.
2. With removable inserts 0.185" ± 0.005" dia.

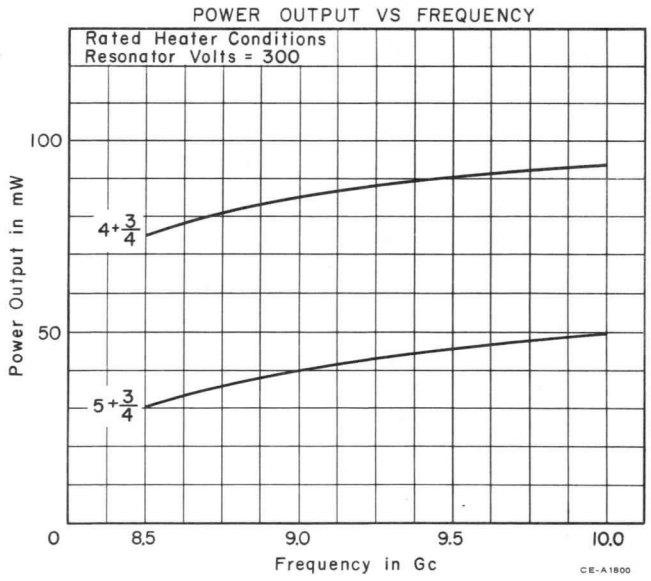

The information contained herein is supplied without assuming responsibility for infringement of patents or other rights of third parties which may result from its use. No license is granted by implication or otherwise under any patent or patent rights of Westinghouse Electric Corporation.

February 15, 1962

REFLEX KLYSTRON TYPE WL-6312
8.5 to 10.0 GC

The WL-6312 is an integral cavity, single-screw-tuned, reflex klystron, tunable from 8.5 – 10.0 Gc., designed for service as the local oscillator for radar systems. The versatility of the WL-6312 also makes it suitable for use in signal generator and laboratory applications where ease of tuning is required.

ELECTRICAL

Cathode	Coated Unipotential
Heater:	
Voltage	6.3 Volts
Current	1.2 Amperes
Frequency	Tunable from 8.5 to 10.0 Gc.

MAXIMUM RATINGS (Note 1)

Absolute Maximum Values

Beam Voltage	400	max.	Volts
Reflector Voltage	–10 to –1000	max.	Volts
Heater Voltage	7.0	max.	Volts
Cathode Current	60	max.	Ma.
Body Temperature	200	max.	°C

TYPICAL OPERATION AT 8.5 Gc.

Resonator Volts = 300	Min.	Ave.	Max.	
Power Output	25	75	–	mW.
Electronic Tuning Range	30	58	–	Mc.
Beam Current	20	27	32	Ma.
Reflector Voltage	–85	–110	–135	Volts
Heater Current	1.08	1.20	1.32	Amperes

TYPICAL OPERATION AT 9.3 Gc.

Resonator Volts = 300	Min.	Ave.	Max.	
Power Output	25	87	–	mW.
Electronic Tuning Range	30	52	–	Mc.
Beam Current	20	27	32	Ma.
Reflector Voltage	–125	–155	–185	Volts
Heater Current	1.08	1.20	1.32	Amperes
Residual FM	–	0.06	0.1	Mc.
Heater Voltage Sensitivity	–	0.5	6.0	Mc/Volt
Temperature Coefficient	–	–0.08	–0.20	Mc/°C
Vibration 10 G – 50 to 200 Cycles.	–	2.0	4.0	Mc.
Shock 200 G	–	0.5	5.0	Mc.

TYPICAL OPERATION AT 10.0 Gc.

Resonator Volts = 300	Min.	Ave.	Max.	
Power Output	25	93	–	mW.
Electronic Tuning Range	30	42	–	Mc.
Beam Current	20	27	32	Ma.
Reflector Voltage	–160	–190	–225	Volts
Heater Current	1.08	1.20	1.32	Amperes

NOTE

1. The given Maximum Ratings must not be exceeded if performance characteristics are to be maintained. All Maximum Ratings may not always be applied simultaneously.

MECHANICAL

Net Weight (Approx.)	7 Ounces
Cooling	Forced air required above 10 watts resonator power input.
Connection	Flying Leads
Mounting	Mates with UG 39/U or UG 40A/U Flange
Tuner	Single Screw
Vibration (50 to 600 cps)	10G
Shock	200G

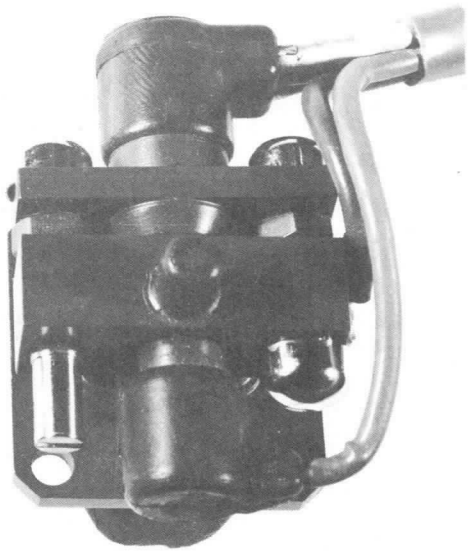

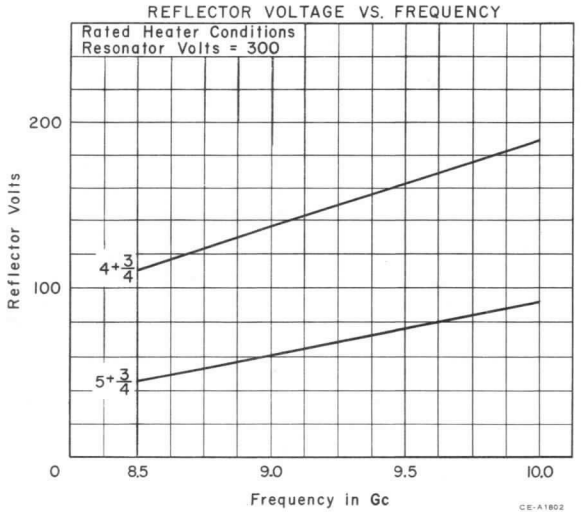

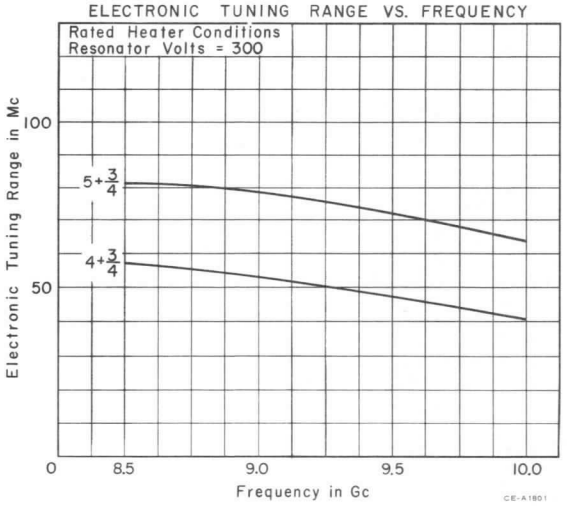

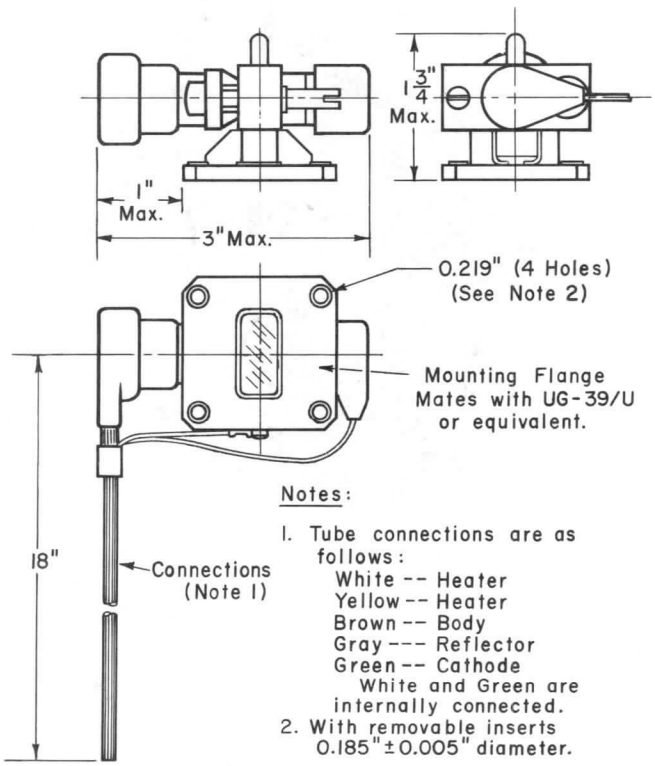

Notes:

1. Tube connections are as follows:
   White -- Heater
   Yellow -- Heater
   Brown -- Body
   Gray --- Reflector
   Green -- Cathode
   White and Green are internally connected.
2. With removable inserts 0.185" ± 0.005" diameter.

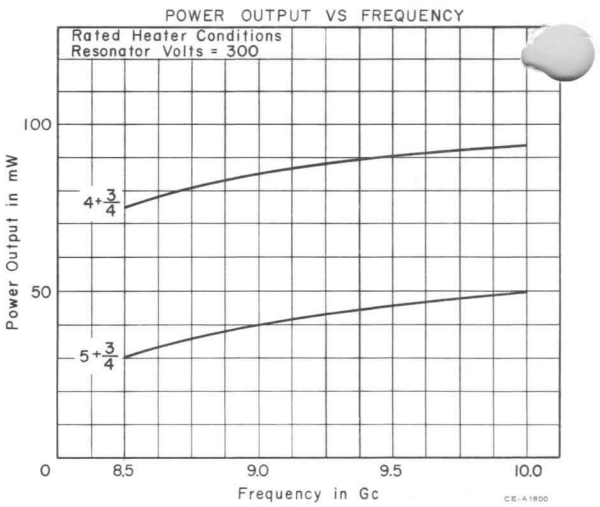

The information contained herein is supplied without assuming responsibility for infringement of patents or other rights of third parties which may result from its use. No license is granted by implication or otherwise under any patent or patent rights of Westinghouse Electric Corporation.

April 1, 1962

REFLEX KLYSTRON TYPE WL-6314
8.5 to 10.0 GC

The WL-6314 is an integral cavity, lock-nut-tuned, reflex klystron, tunable from 8.5 – 10.0 Gc., designed for service in fixed frequency applications. Insulated flexible leads and terminals encapsulated in silicone rubber enhance its capabilities in high altitude and high humidity environments. Satisfactory operation is obtained with low or medium resonator voltages.

ELECTRICAL

Cathode	Coated Unipotential	
Heater:		
Voltage	6.3	Volts
Current	1.2	Amperes
Frequency	Tunable from 8.5 to 10.0 Gc.	

MAXIMUM RATINGS (Note 1)

Absolute Maximum Values

Beam Voltage	400 max.		Volts
Reflector Voltage	–10 to –1000 max.		Volts
Heater Voltage	7.0 max.		Volts
Cathode Current	60 max.		Ma.
Body Temperature	200 max.		°C

TYPICAL OPERATION AT 8.5 Gc.

Resonator Volts = 350	Min.	Ave.	Max.	
Power Output	50	85	- -	mW.
Electronic Tuning Range	40	65	- -	Mc.
Beam Current	- -	40	60	Ma.
Reflector Voltage	–85	–115	–145	Volts
Heater Current	1.08	1.20	1.32	Amperes

TYPICAL OPERATION AT 9.3 Gc.

Resonator Volts = 350	Min.	Ave.	Max.	
Power Output	75	104	- -	mW.
Electronic Tuning Range	40	62	- -	Mc.
Beam Current	- -	40	60	Ma.
Reflector Voltage	–130	–165	–205	Volts
Heater Current	1.08	1.20	1.32	Amperes
Residual FM	- -	0.06	0.1	Mc.
Heater Voltage Sensitivity	- -	0.5	6.0	Mc/Volt
Temperature Coefficient	- -	–0.08	–0.2	Mc/°C
Vibration 10 G –50 to 1000 Cycles	- -	2.0	4.0	Mc.

TYPICAL OPERATION AT 10.0 Gc.

Resonator Volts = 350	Min.	Ave.	Max.	
Power Output	100	112	- -	mW.
Electronic Tuning Range	40	53	- -	Mc.
Beam Current	- -	40	60	Ma.
Reflector Voltage	–170	–215	–255	Volts
Heater Current	1.08	1.20	1.32	Amperes

NOTE

1. The given Maximum Ratings must not be exceeded if performance characteristics are to be maintained. All Maximum Ratings may not always be applied simultaneously.

MECHANICAL

Net Weight (Approx.)	7 Ounces
Cooling	Forced air required above 10 watts resonator power input.
Connection	Flying Leads
Mounting	Mates with UG 39/U or UG 40A/U Flange
Tuner	Lock-Nut
Vibration (50 to 1000 cps)	10G
Shock	200G

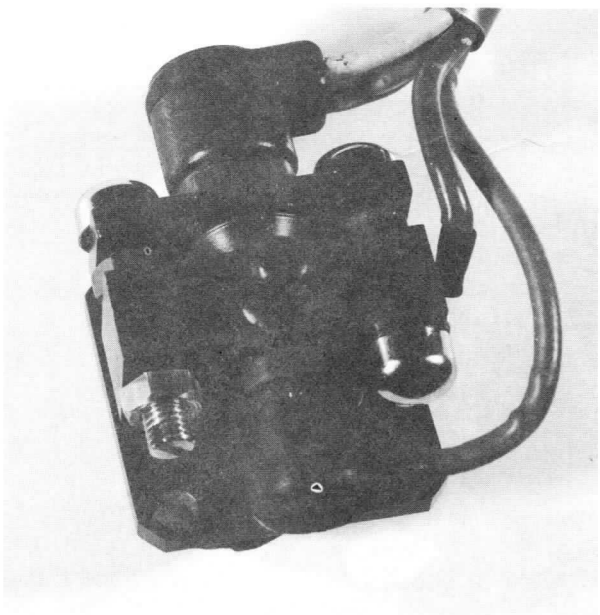

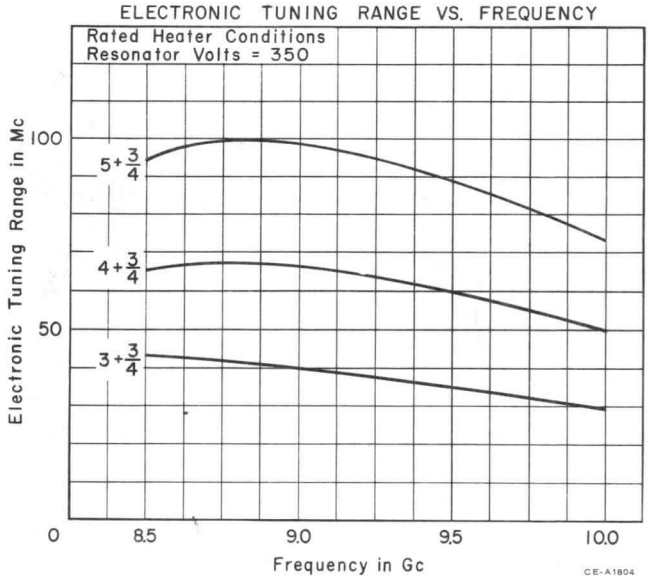

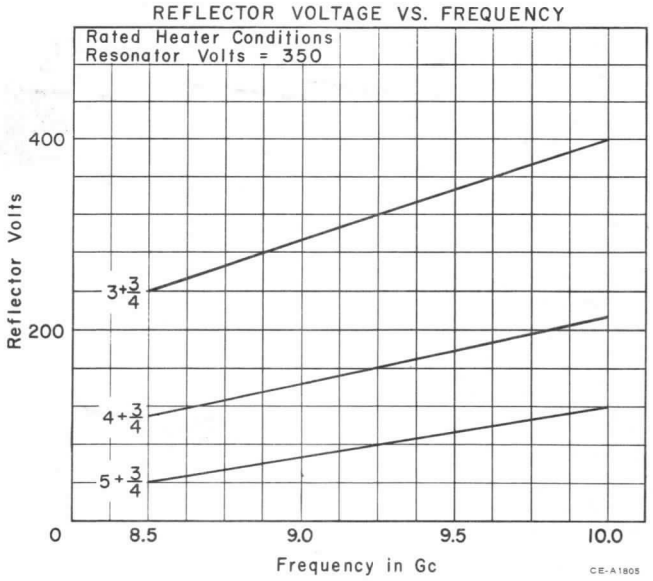

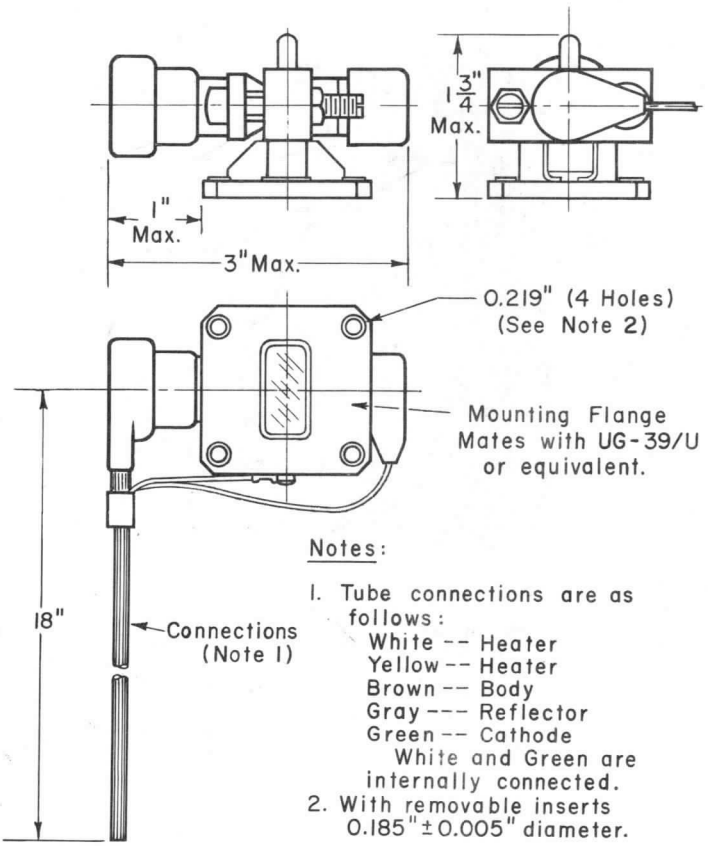

Notes:

1. Tube connections are as follows:
   White -- Heater
   Yellow -- Heater
   Brown -- Body
   Gray --- Reflector
   Green -- Cathode
   White and Green are internally connected.
2. With removable inserts 0.185" ± 0.005" diameter.

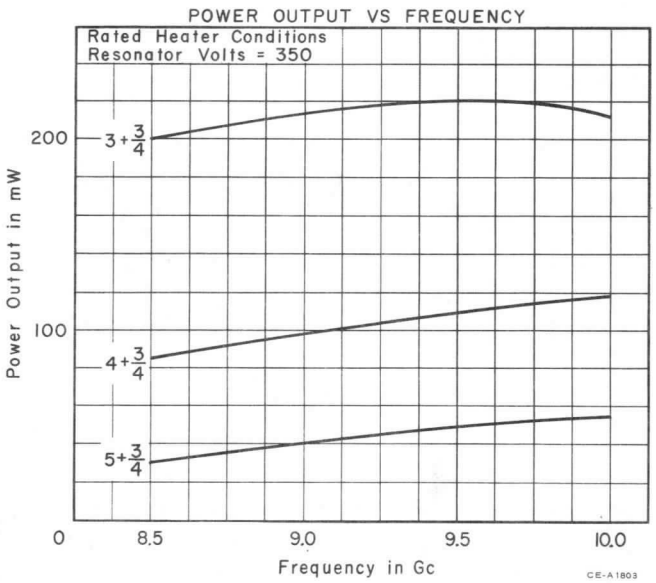

The information contained herein is supplied without assuming responsibility for infringement of patents or other rights of third parties which may result from its use. No license is granted by implication or otherwise under any patent or patent rights of Westinghouse Electric Corporation.

February 15, 1962

REFLEX KLYSTRON TYPE WL-6315
8.5 to 10.0 GC

The WL-6315 is an integral cavity, single-screw-tuned, reflex klystron, tunable from 8.5 – 10.0 Gc., designed for service as the local oscillator for radar systems. The WL-6315 is also suitable for signal source in laboratory applications. The base and cap are potted in silicone rubber allowing operation in high humidity environments.

ELECTRICAL

Cathode	Coated Unipotential
Heater:	
Voltage	6.3 Volts
Current	1.2 Amperes
Frequency	Tunable from 8.5 to 10.0 Gc.

MAXIMUM RATINGS (Note 1)

Absolute Maximum Values

Beam Voltage	400 max.	Volts
Reflector Voltage	–10 to –1000 max.	Volts
Heater Voltage	7.0 max.	Volts
Cathode Current	60 max.	Ma.
Body Temperature	200 max.	°C

TYPICAL OPERATION AT 8.5 Gc.

Resonator Volts = 250	Min.	Ave.	Max.	
Power Output	10	27	–	mW.
Electronic Tuning Range	43	67	–	Mc.
Beam Current	–	24	40	Ma.
Reflector Voltage	–15	–53	–90	Volts
Heater Current	1.08	1.20	1.32	Amperes

TYPICAL OPERATION AT 9.3 Gc

Resonator Volts = 250	Min.	Ave.	Max.	
Power Output	10	33	–	mW.
Electronic Tuning Range	43	59	–	Mc.
Beam Current	–	24	40	Ma.
Reflector Voltage	–45	–90	–130	Volts
Heater Current	1.08	1.20	1.32	Amperes
Residual FM	–	0.06	0.1	Mc.
Heater Voltage Sensitivity	–	0.5	4.0	Mc/Volt
Temperature Coefficient	–	0.08	–0.2	Mc/°C

TYPICAL OPERATION AT 10.0 Gc.

Resonator Volts = 250	Min.	Ave.	Max.	
Power Output	10	36	–	mW.
Electronic Tuning Range	43	46	–	Mc.
Beam Current	–	24	40	Ma.
Reflector Voltage	–70	–115	–160	Volts
Heater Current	1.08	1.20	1.32	Amperes

MECHANICAL

Net Weight (Approx.)	7 Ounces
Cooling	Forced air required above 10 watts resonator power input.
Connection	Flying Leads
Mounting	Mates with UG 39/U or UG 40A/U Flange
Tuner	Single Screw
Vibration (50 to 600 cps)	10G
Shock	200G

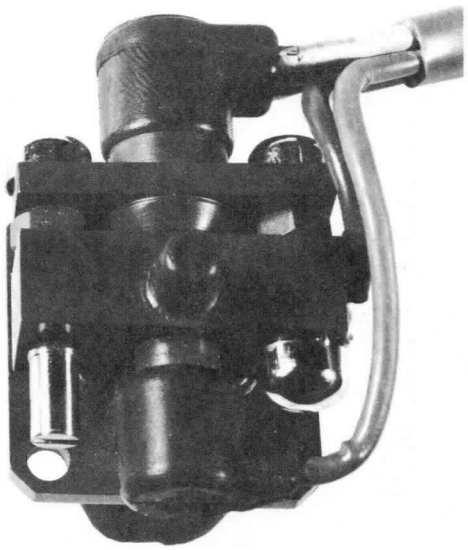

NOTE

1. The given Maximum Ratings must not be exceeded if performance characteristics are to be maintained. All Maximum Ratings may not always be applied simultaneously.

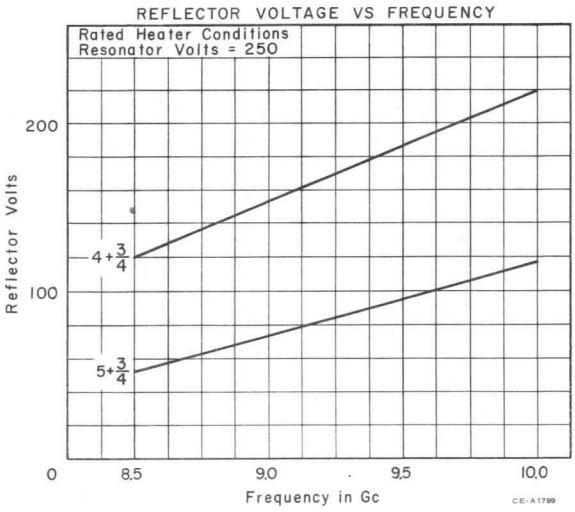

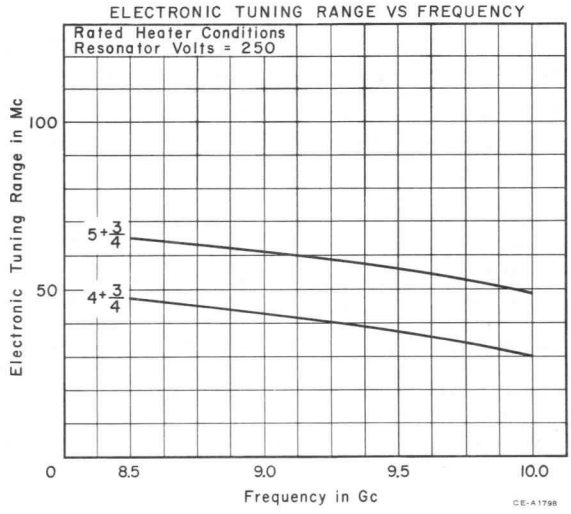

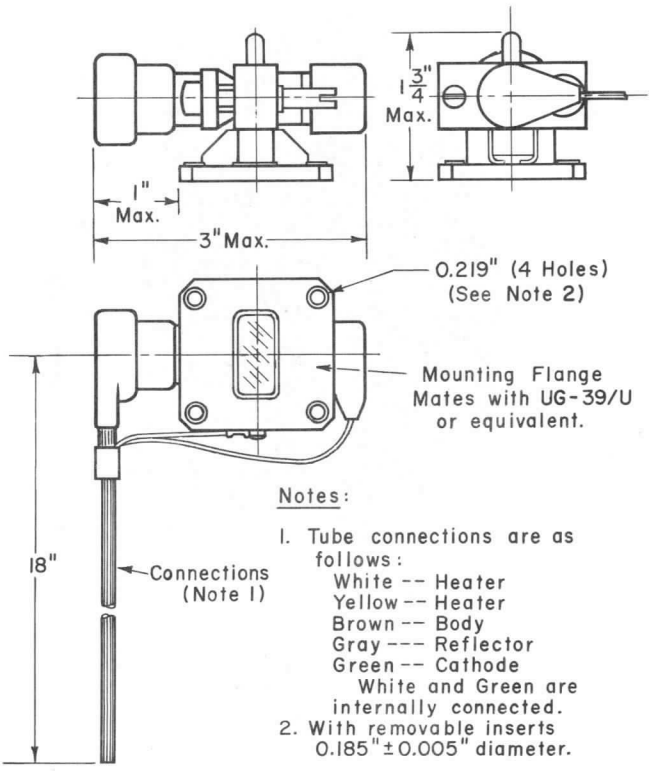

Notes:

1. Tube connections are as follows:
   White -- Heater
   Yellow -- Heater
   Brown -- Body
   Gray --- Reflector
   Green -- Cathode
   White and Green are internally connected.
2. With removable inserts 0.185" ± 0.005" diameter.

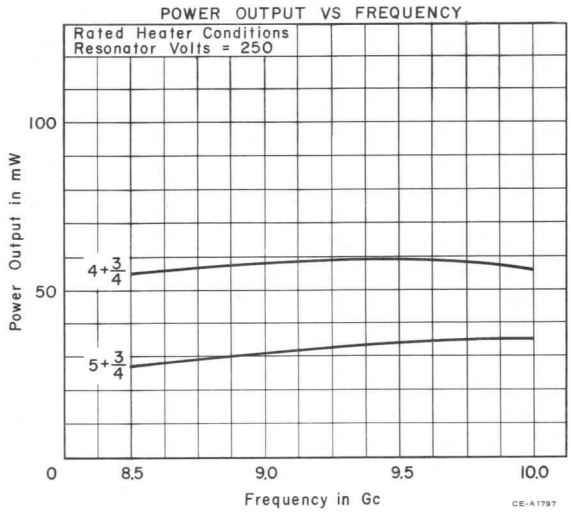

The information contained herein is supplied without assuming responsibility for infringement of patents or other rights of third parties which may result from its use. No license is granted by implication or otherwise under any patent or patent rights of Westinghouse Electric Corporation.

March 15, 1962

REFLEX KLYSTRON TYPE WL-6316
8.5 to 10.0 GC

The WL-6316 is an integral cavity, lock-nut-tuned, reflex klystron, tunable from 8.5 – 10.0 Gc., designed for service as the local oscillator for airborne radar systems. This tube has excellent performance at very low resonator voltages and is capable of operating into a 1.5 VSWR with very little change in power or frequency. The WL-6316 has molded flexible leads terminating in a Viking connector.

ELECTRICAL

Cathode	Coated Unipotential	
Heater:		
Voltage	6.3	Volts
Current	1.2	Amperes
Frequency	Tunable from 8.5 to 10.0 Gc.	

MAXIMUM RATINGS (Note 1)

Absolute Maximum Values

Beam Voltage	400 max.	Volts
Reflector Voltage	–10 to –1000 max.	Volts
Heater Voltage	7.0 max.	Volts
Cathode Current	60 max.	Ma.
Body Temperature	200 max.	°C

TYPICAL OPERATION AT 8.5 Gc.

Resonator Volts = 200	Min.	Ave.	Max.	
Power Output	15	23	--	mW.
Electronic Tuning Range	20	55	--	Mc.
Beam Current	--	17.5	23	Ma.
Reflector Voltage	–56	–86	–112	Volts
Heater Current	1.08	1.2	1.32	Amperes

TYPICAL OPERATION AT 9.3 Gc.

Resonator Volts = 200	Min.	Ave.	Max.	
Power Output	15	23	--	mW.
Electronic Tuning Range	20	43	--	Mc.
Beam Current	--	17.5	23	Ma.
Reflector Voltage	–87	–118	–148	Volts
Heater Current	1.08	1.2	1.32	Amperes
Residual FM	--	0.058	0.1	Mc.
Heater Voltage Sensitivity	--	0.5	4	Mc/Volt
Temperature Coefficient	--	–0.08	–0.2	Mc/°C

TYPICAL OPERATION AT 10.0 Gc.

Resonator Volts = 200	Min.	Ave.	Max.	
Power Output	15	22	--	mW.
Electronic Tuning Range	20	28	--	Mc.
Beam Current	--	17.5	23	Ma.
Reflector Voltage	–113	–152	–181	Volts
Heater Current	1.08	1.2	1.32	Amperes

NOTE

1. The given Maximum Ratings must not be exceeded if performance characteristics are to be maintained. All Maximum Ratings may not always be applied simultaneously.

MECHANICAL

Net Weight (Approx.)	7 Ounces
Cooling	Forced air required above 10 watts resonator power input.
Connection	Viking Connector No. VP 5/2AA1
Mounting	Mates with UG 39/U or UG 40A/U Flange
Tuner	Lock-Nut
Vibration (50 to 1000 cps)	10G
Shock	200G

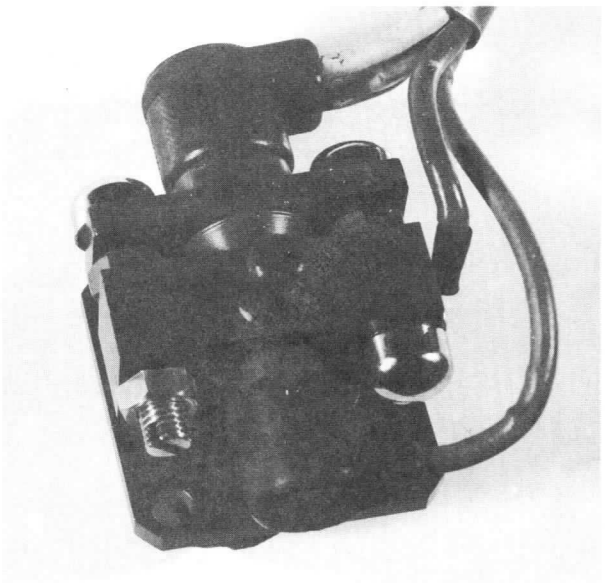

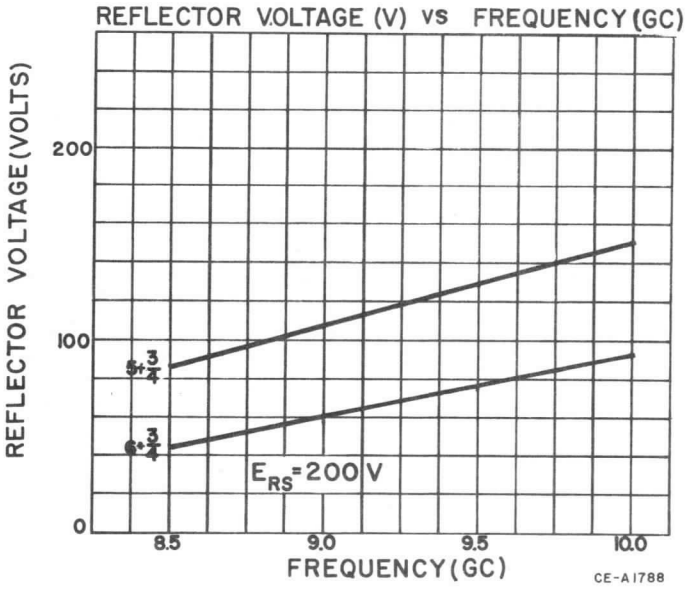

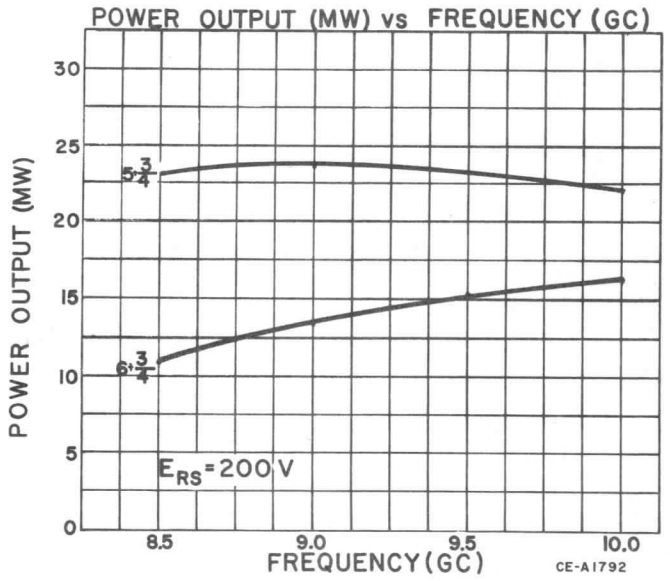

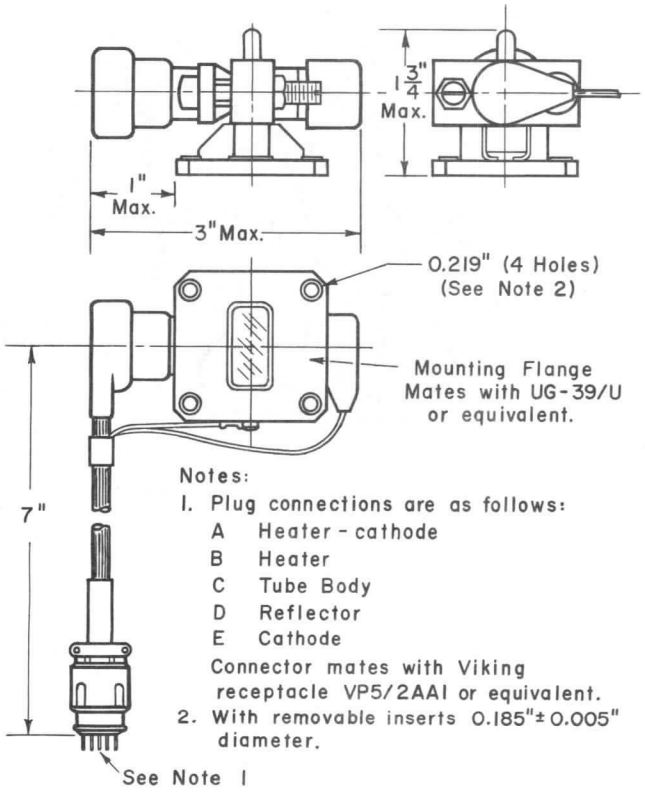

Notes:

1. Plug connections are as follows:
   - A Heater - cathode
   - B Heater
   - C Tube Body
   - D Reflector
   - E Cathode

   Connector mates with Viking receptacle VP5/2AA1 or equivalent.
2. With removable inserts 0.185" ± 0.005" diameter.

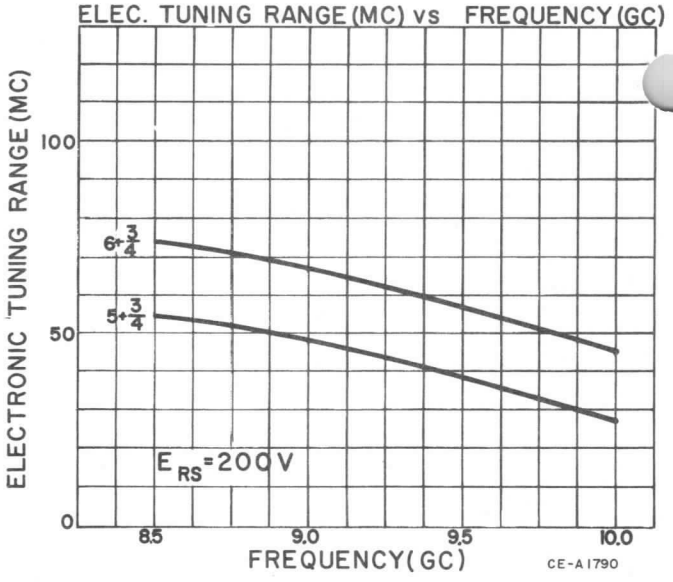

The information contained herein is supplied without assuming responsibility for infringement of patents or other rights of third parties which may result from its use. No license is granted by implication or otherwise under any patent or patent rights of Westinghouse Electric Corporation.

March 15. 1962

REFLEX KLYSTRON TYPE WL-6780
8.5 to 10.0 GC

The WL-6780 is an integral cavity, lock-nut-tuned, reflex klystron, tunable from 8.5 – 10.0 Gc., designed for service in lower power, fixed frequency applications. Insulated flexible leads and terminals encapsulated in silicone rubber enhance its capabilities in high humidity environments.

ELECTRICAL

Cathode	Coated Unipotential		
Heater:			
Voltage	6.3		Volts
Current	1.2		Amperes
Frequency	Tunable from 8.5 to 10.0 Gc.		

MAXIMUM RATINGS (Note 1)
Absolute Maximum Values

Beam Voltage	400	max.	Volts
Reflector Voltage	–10 to –1000	max.	Volts
Heater Voltage	7.0	max.	Volts
Cathode Current	60	max.	Ma.
Body Temperature	200	max.	°C

TYPICAL OPERATION AT 8.5 Gc.

Resonator Volts = 200	Min.	Ave.	Max.	
Power Output	10	23	- -	mW.
Electronic Tuning Range	20	55	- -	Mc.
Beam Current	- -	17.5	23	Ma.
Reflector Voltage	–56	–86	–112	Volts
Heater Current	1.08	1.2	1.32	Amperes

TYPICAL OPERATION AT 9.3 Gc.

Resonator Volts = 200	Min.	Ave.	Max.	
Power Output	10	23	- -	mW.
Electronic Tuning Range	20	43	- -	Mc.
Beam Current	- -	17.5	23	Ma.
Reflector Voltage	–87	–118	–148	Volts
Heater Current	1.08	1.2	1.32	Amperes
Residual FM	- -	0.058	0.1	Mc.
Heater Voltage Sensitivity	- -	0.5	4	Mc/Volt
Temperature Coefficient	- -	–0.08	–0.2	Mc/°C

TYPICAL OPERATION AT 10.0 Gc.

Resonator Volts = 200	Min.	Ave.	Max.	
Power Output	10	22	- -	mW.
Electronic Tuning Range	20	28	- -	Mc.
Beam Current	- -	17.5	23	Ma.
Reflector Voltage	–113	–152	–181	Volts
Heater Current	1.08	1.2	1.32	Amperes

NOTE

1. The given Maximum Ratings must not be exceeded if performance characteristics are to be maintained. All Maximum Ratings may not always be applied simultaneously.

MECHANICAL

Net Weight (Approx.)	7 Ounces
Cooling	Forced air required above 10 watts resonator power input.
Connection	Viking Connector No. VP 5/2AA1
Mounting	Mates with UG 39/U or UG 40A/U Flange
Tuner	Lock-Nut
Vibration (50 to 1000 cps)	10G
Shock	200G

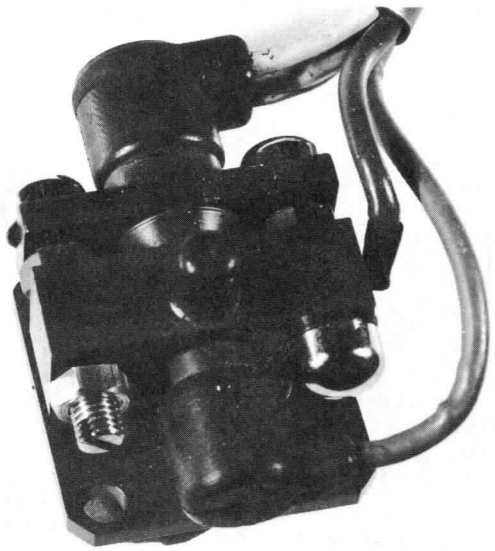

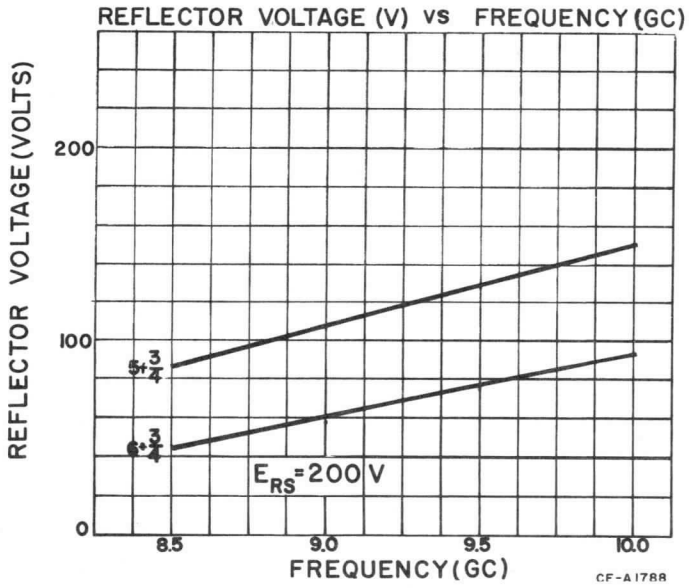

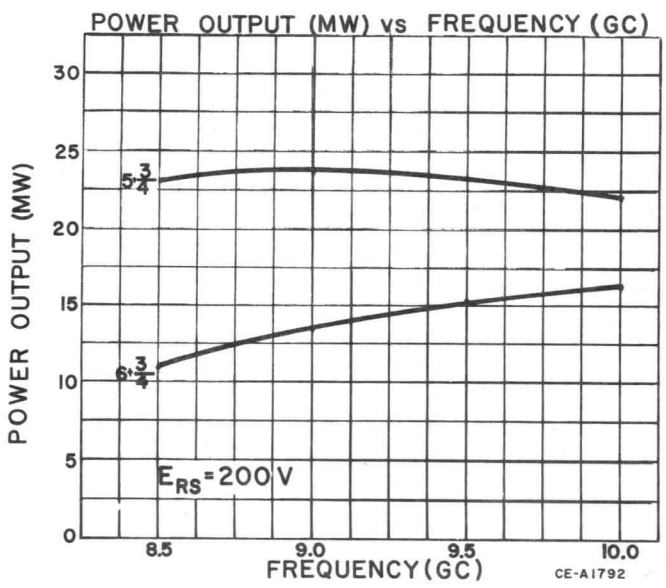

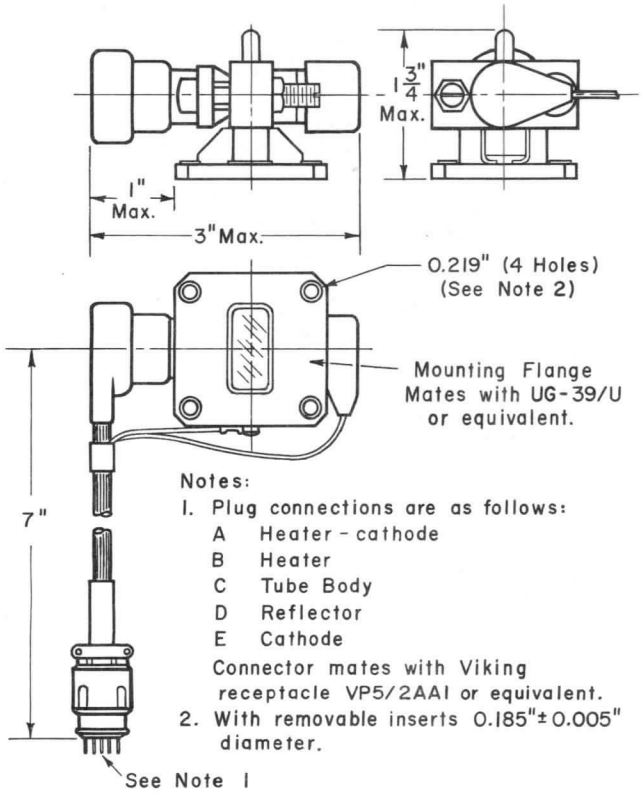

Notes:

1. Plug connections are as follows:
   - A Heater - cathode
   - B Heater
   - C Tube Body
   - D Reflector
   - E Cathode

   Connector mates with Viking receptacle VP5/2AA1 or equivalent.
2. With removable inserts 0.185" ± 0.005" diameter.

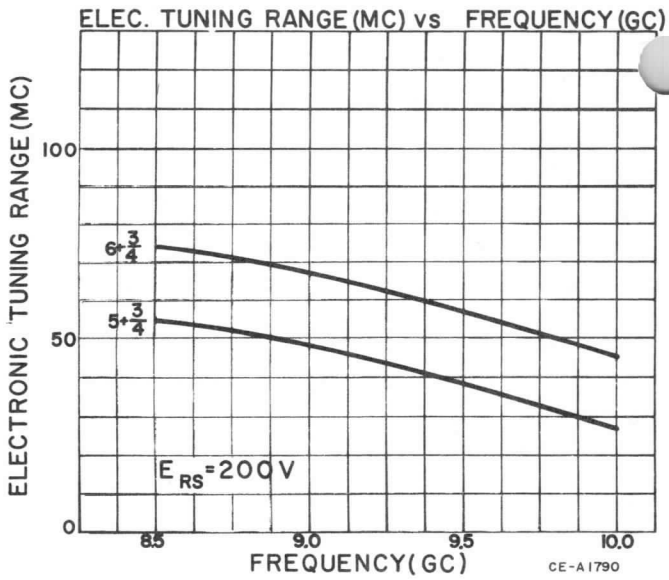

The information contained herein is supplied without assuming responsibility for infringement of patents or other rights of third parties which may result from its use. No license is granted by implication or otherwise under any patent or patent rights of Westinghouse Electric Corporation.

Westinghouse®

WL-6781

June 1, 1962

REFLEX KLYSTRON TYPE WL-6781
8.5 to 10.0 GC

The WL-6781 is an integral cavity, single-screw-tuned, reflex klystron, tunable from 8.5 – 10.0 Gc., designed for service as the local oscillator for airborne radar systems. This tube has excellent performance at very low resonator voltages and is capable of operating into a 1.5 VSWR with very little change in power or frequency. The excellent frequency stability of type WL-6781 also recommends it as a laboratory signal source.

ELECTRICAL

Cathode	Coated Unipotential	
Heater:		
Voltage	6.3	Volts
Current	1.2	Amperes
Frequency	Tunable from 8.5 to 10.0 Gc.	

MAXIMUM RATINGS (Note 1)

Absolute Maximum Values

Beam Voltage	400 max.	Volts
Reflector Voltage	–10 to –1000 max.	Volts
Heater Voltage	7.0 max.	Volts
Cathode Current	60 max.	Ma.
Body Temperature	200 max.	°C

TYPICAL OPERATION AT 8.5 Gc.

Resonator Volts = 200	Min.	Ave.	Max.	
Power Output	15	23	- -	mW.
Electronic Tuning Range	20	55	- -	Mc.
Beam Current	- -	17.5	23	Ma.
Reflector Voltage	–56	–86	–112	Volts
Heater Current	1.08	1.2	1.32	Amperes

TYPICAL OPERATION AT 9.3 Gc.

Resonator Volts = 200	Min.	Ave.	Max.	
Power Output	15	23	- -	mW.
Electronic Tuning Range	20	43	- -	Mc.
Beam Current	- -	17.5	23	Ma.
Reflector Voltage	–87	–118	–148	Volts
Heater Current	1.08	1.2	1.32	Amperes
Residual FM	- -	0.058	0.1	Mc.
Heater Voltage Sensitivity	- -	0.5	4	Mc/Volt
Temperature Coefficient	- -	–0.08	–0.2	Mc/°C
Vibration 10 G – 50 to 2000 Cycles.	- -	2.5	4	Mc.
Shock 100 G	- -	1.6	4	Mc.

TYPICAL OPERATION AT 10.0 Gc.

Resonator Volts = 200	Min.	Ave.	Max.	
Power Output	15	22	- -	mW.
Electronic Tuning Range	20	28	- -	Mc.
Beam Current	- -	17.5	23	Ma.
Reflector Voltage	–113	–152	–181	Volts
Heater Current	1.08	1.2	1.32	Amperes

NOTE

1. The given Maximum Ratings must not be exceeded if performance characteristics are to be maintained. All Maximum Ratings may not always be applied simultaneously.

MECHANICAL

Net Weight (Approx.)	7 Ounces
Cooling	Forced air required above 10 watts resonator power input.
Connection	Viking Connector No. VP 5/2AA1
Mounting	Mates with UG 39/U or UG 40A/U Flange
Tuner	Single Screw
Vibration (50 to 2000 cps)	10 G
Shock	100 G

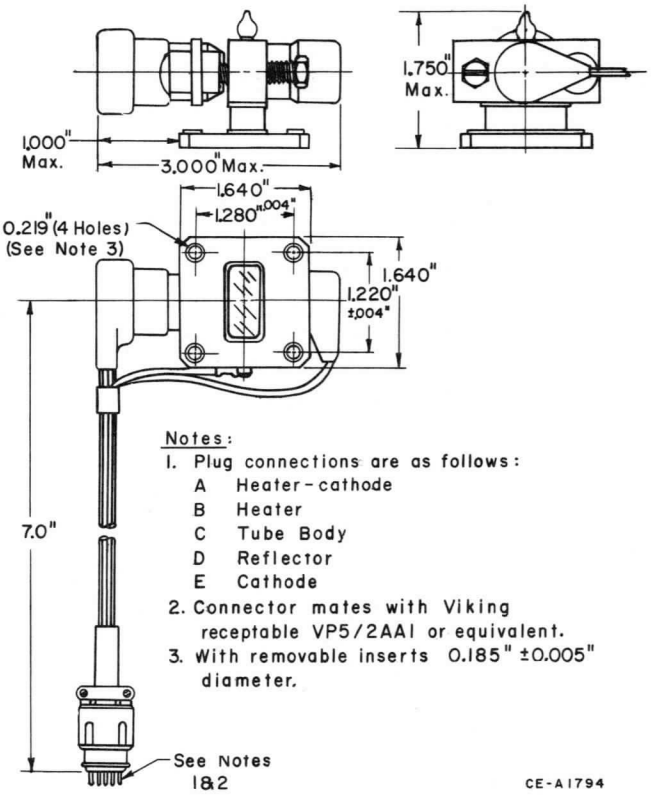

Notes:

1. Plug connections are as follows:
   - A Heater-cathode
   - B Heater
   - C Tube Body
   - D Reflector
   - E Cathode
2. Connector mates with Viking receptable VP5/2AA1 or equivalent.
3. With removable inserts 0.185" ±0.005" diameter.

Westinghouse®

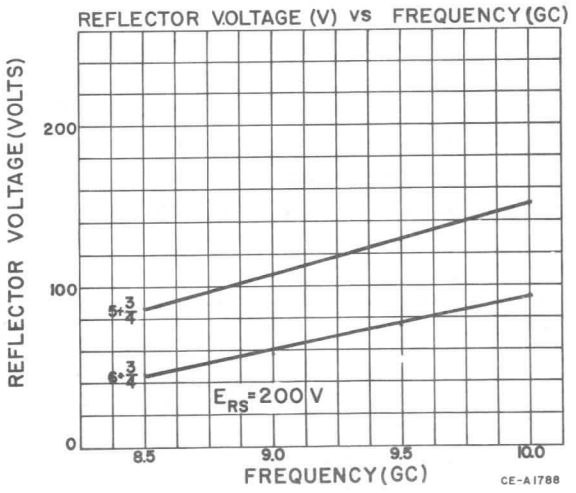

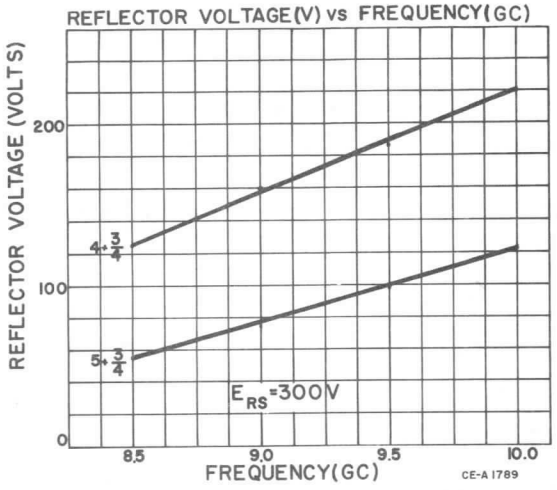

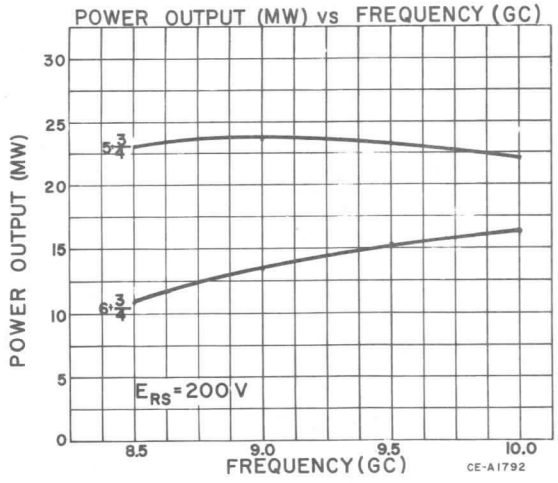

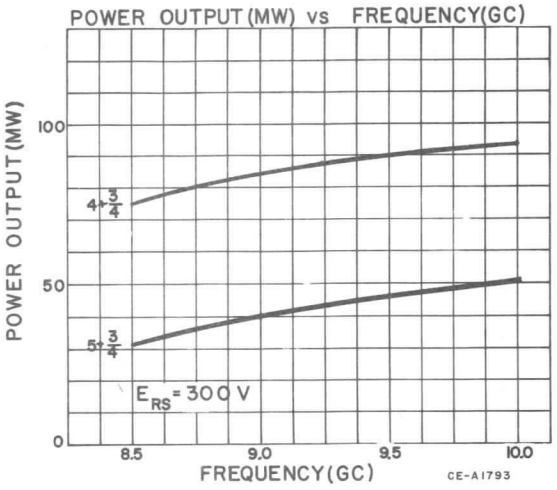

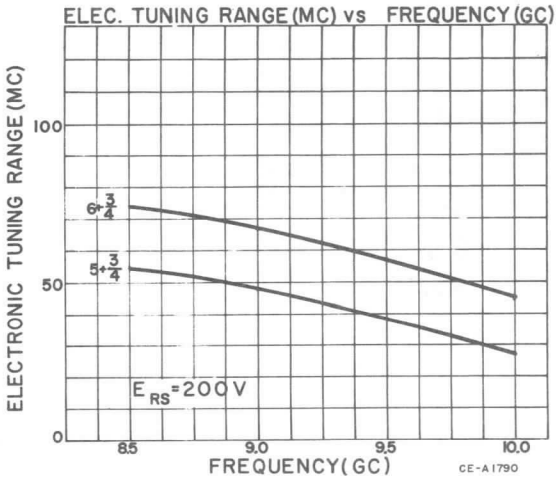

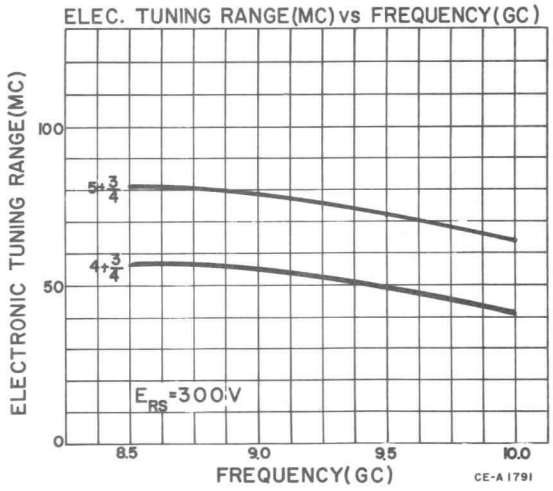

The information contained herein is supplied without assuming responsibility for infringement of patents or other rights of third parties which may result from its use. No license is granted by implication or otherwise under any patent or patent rights of Westinghouse Electric Corporation.

March 15, 1962

REFLEX KLYSTRON TYPE WL-6915
8.5 to 10.0 GC

The WL-6915 is an integral cavity, single-screw-tuned, reflex klystron, tunable from 8.5 – 10.0 Gc., designed for service as the local oscillator for radar systems. The versatility of the WL-6915 also makes it suitable for use in signal generator and laboratory applications where ease of tuning is required.

ELECTRICAL

Cathode	Coated Unipotential	
Heater:		
Voltage	6.3	Volts
Current	1.2	Amperes
Frequency	Tunable from 8.5 to 10.0 Gc.	

MAXIMUM RATINGS (Note 1)

Absolute Maximum Values

Beam Voltage	400 max.	Volts
Reflector Voltage	–10 to –1000 max.	Volts
Heater Voltage	7.0 max.	Volts
Cathode Current	60 max.	Ma.
Body Temperature	200 max.	°C

TYPICAL OPERATION AT 8.5 Gc.

Resonator Volts = 300	Min.	Ave.	Max.	
Power Output	25	75	- -	mW.
Electronic Tuning Range	30	38	- -	Mc.
Beam Current	20	27	32	Ma.
Reflector Voltage	–85	–110	–135	Volts
Heater Current	1.08	1.20	1.32	Amperes

TYPICAL OPERATION AT 9.3 Gc.

Resonator Volts = 300	Min.	Ave.	Max.	
Power Output	25	87	- -	mW.
Electronic Tuning Range	30	52	- -	Mc.
Beam Current	20	27	32	Ma.
Reflector Voltage	–125	–145	–185	Volts
Heater Current	1.08	1.20	1.32	Amperes
Residual FM	- -	0.06	0.1	Mc.
Heater Voltage Sensitivity	- -	0.5	6.0	Mc/Volt
Temperature Coefficient	- -	0.08	0.20	Mc/°C
Vibration 10 G – 50 to 200 Cycles	- -	2.0	4.0	Mc.

TYPICAL OPERATION AT 10.0 Gc.

Resonator Volts = 300	Min.	Ave.	Max.	
Power Output	25	93	- -	mW.
Electronic Tuning Range	30	42	- -	Mc.
Beam Current	20	27	32	Ma.
Reflector Voltage	–160	–190	–225	Volts
Heater Current	1.08	1.20	1.32	Amperes

NOTE

1. The given Maximum Ratings must not be exceeded if performance characteristics are to be maintained. All Maximum Ratings may not always be applied simultaneously.

MECHANICAL

Net Weight (Approx.)	7 Ounces
Cooling	Forced air required above 10 watts resonator power input.
Connection	Viking Connector No. VP 5/2AA1
Mounting	Mates with UG 39/U or UG 40A/U Flange
Tuner	Single Screw
Vibration (50 to 500 cps)	10G
Shock	200G

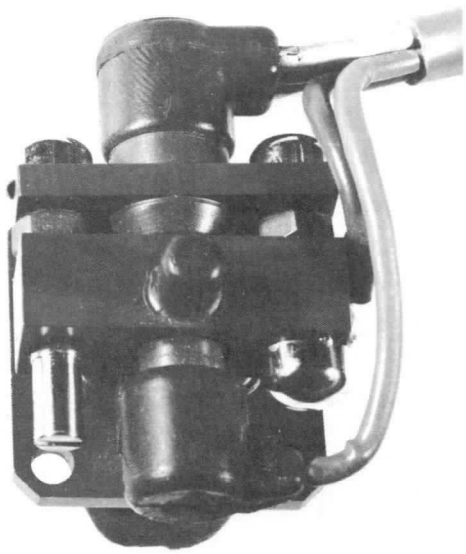

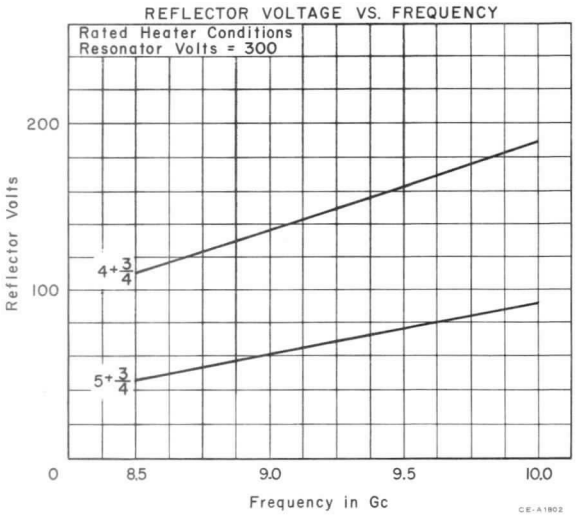

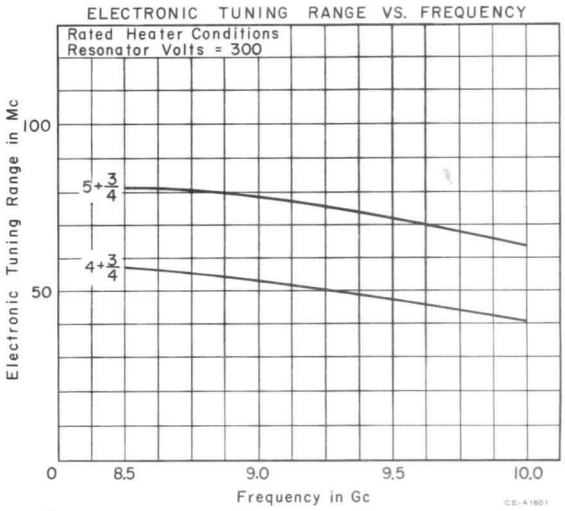

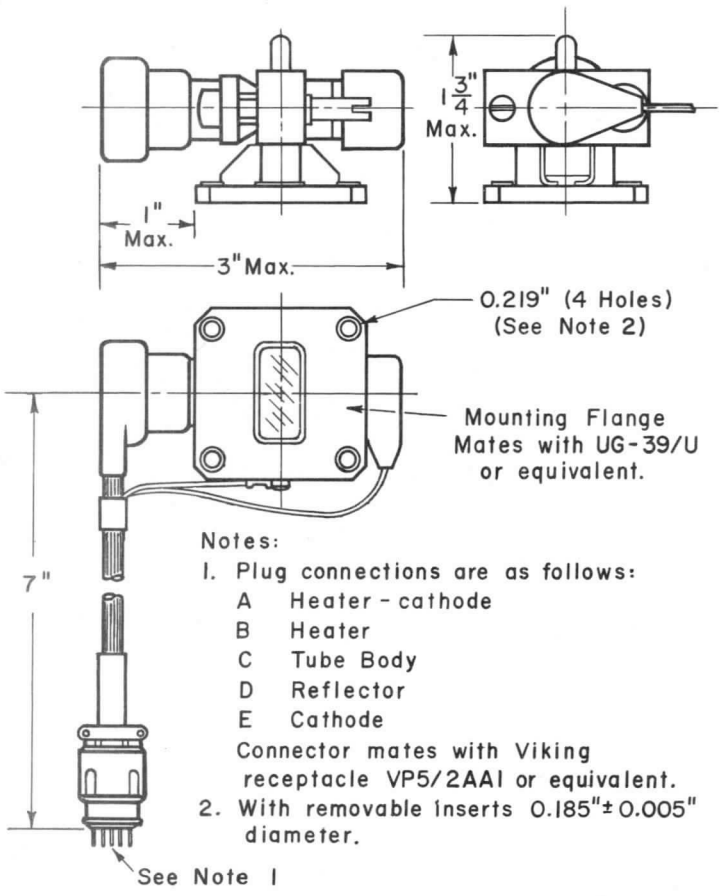

Notes:

1. Plug connections are as follows:
   - A Heater - cathode
   - B Heater
   - C Tube Body
   - D Reflector
   - E Cathode

   Connector mates with Viking receptacle VP5/2AA1 or equivalent.
2. With removable inserts 0.185" ± 0.005" diameter.

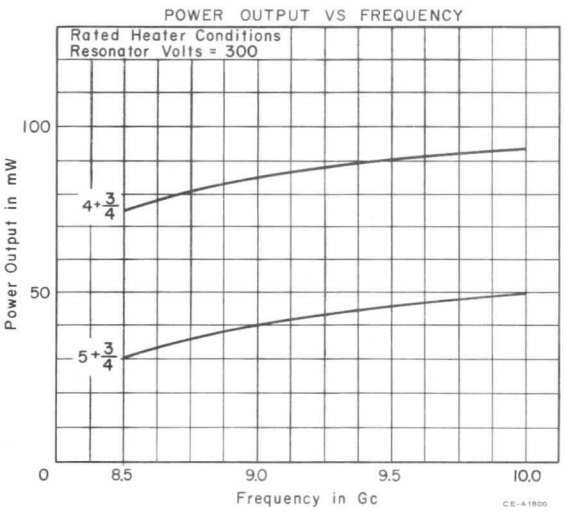

The information contained herein is supplied without assuming responsibility for infringement of patents or other rights of third parties which may result from its use. No license is granted by implication or otherwise under any patent or patent rights of Westinghouse Electric Corporation.

MAGNETIC FIELD IN MAGNETRONS

by
W. A. Gerard
and
J. E. Duhl

Summary

The Magnetic Field in a magnetron is a critical design parameter. The magnetic field intensity determines the synchronous velocity of the electrons and thus forms a vital part of the power generating mechanism of the magnetron. It is therefore important that personnel both in the military and in system manufacture who use magnetrons be acquainted with the nature of magnetron magnets and handle them in a manner that will preserve their correct operating flux density.

A packaged magnetron is one employing integral, permanent magnets to provide the required magnetic field. The level of magnetization and the orientation of these magnets are adjusted to their optimum values at the factory. To maintain these settings, the magnets are retained by strong bolts and are usually encapsulated with an aluminum sheath or tough plastic. The magnets used in magnetrons are usually made of Alnico V, an expensive material that must be cast to shape. It has excellent temperature characteristics, showing little change in magnetic strength with temperature changes. Special processing by the manufacturer insures the magnet against significant shift in magnetism due to aging. The magnetron and its magnet is in effect a calibrated instrument.

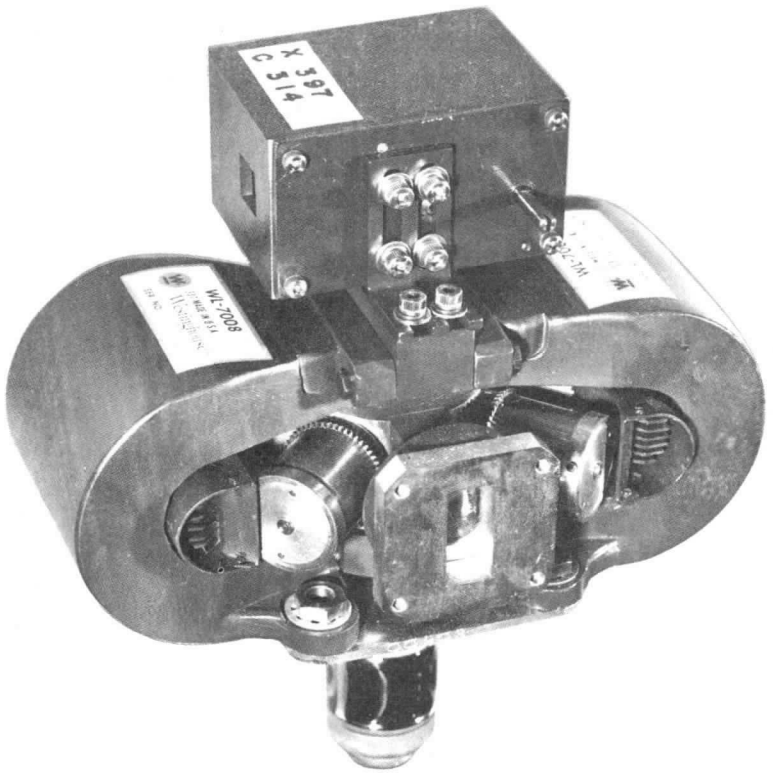

THE WL-7008 A PACKAGED MAGNETRON

The operation of the magnetron magnet may be seen by referring to a curve showing magnetizing force vs. flux density. The permanent magnet works in the 2nd quadrant of the curve and only that portion is shown here.

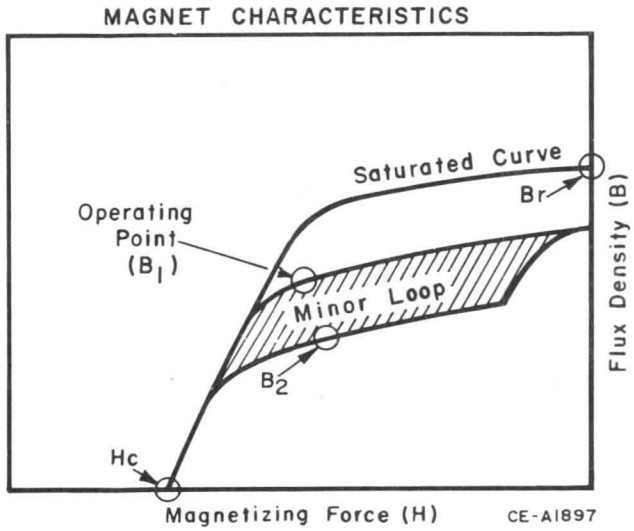

FIGURE 1

In Figure 1 we see that the magnetron magnet is operated at Point B_1 on a minor loop, about 5% from the curve generated by a saturated magnet. This is the best compromise between weight and stability. If the magnet is removed from the magnetron, or the gap is shunted with magnetic material, or the magnets are subjected to a severe shock, the magnet will move on the minor loop to a new flux density point (B_2), lower than B_1. The change may be great and is irreversible. The original value can be restored only by re-magnetizing the magnet. This change has an important effect on the magnetron.

Figure 2 is the performance chart for a magnetron with operating lines corresponding to different values of magnetic field. Magnetron efficiency varies with the magnetic field according to the approximate relationship of:

$$\text{Percent Efficiency} = 100\left(K - \frac{k}{B}\right)$$

where K and k are constants determined by tube geometry.

The result of lower efficiency is low power output. The lower magnetic field also reduces the anode voltage. The result with a typical soft tube modulator would be to operate the magnetron at a higher current and at a voltage outside the specified range.

The tube may be less stable at this point and may exhibit poor spectrum. The poor stability could lead to rapid destruction of the tube. It is, therefore, important that great care be taken in the handling and application of magnetrons.

The typical magnetron is massive and creates a false impression of unlimited ruggedness. Actually the exposed magnet, while truly rugged physically, has delicate magnetic properties. The following rules should be used as a guide in handling and application.

HANDLING PRECAUTIONS FOR MAGNETRONS

1. Never use a magnetic tool such as screw drivers or wrenches near a magnetron. Tools of 300 series stainless steel, beryllium copper or other non-magnetic material, are musts and only these tools should be allowed in areas where magnetrons are handled and assembled into equipment. This is important to avoid accidental contact of magnetic tools by uninformed personnel.
2. Never disturb the magnets. Do not attempt to disassemble the magnets for any reason. The magnetron manufacturer is the only one capable of properly setting the field on the tube. The magnets are attached to the tube with locking devices in order to avoid disturbance in normal use.
3. Keep tubes away from magnetic material. This includes both the handling phase and the system socket. Consult the tube manufacturer if you must use magnetic material close to the tube. Each tube carries a label describing the safe distance between the tube and other magnetic material.
4. Avoid sudden shocks to the magnet. The magnetron is often heavy. Be sure the personnel handling the tube are provided with means to move it without relying on their own physical strength. A heavy object is often dropped into a position, rather than placed, and this can be sufficient to shock the magnets.
5. Avoid strong AC fields. Many electromagnetic shakers have fields strong enough to demagnetize a magnet.
6. Consider the environment in the system. Stray shocks and vibration can demagnetize the magnets. Consult with the magnetron manufacturer if you suspect the shock and vibration in the system exceeds the published specifications of the magnetron manufacturer.
7. Be careful where the magnetron is stored. The inner container is designed to properly space the magnetron from magnetic material. The magnetron should be stored in it where possible. (NOTE: The inner carton alone should not be used as a shipping container.) Avoid placing the tube sans carton on steel benches, desks, etc. Contact with a steel desk even though protected by a heavy plastic layer can demagnetize the magnet.
8. Avoid loose magnetic material near the tube. Small magnetic material such as bolts, staples, steel wool, etc. will be attracted to the tube. While this material may lower the magnetic field, it is even more likely to damage the gearing in tunable tubes, or cause voltage breakdown if trapped near input or output sections of the tube.

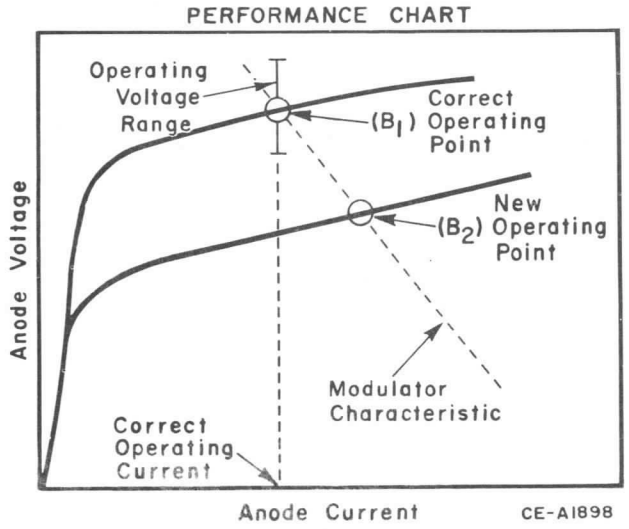

FIGURE 2

This list is designed to assist the magnetron user. Many of the known problems have been listed. Severe demagnetization will throw the tube out of specification, often permanently damaging the tube. Small amounts of demagnetization may reduce the life expectancy of the tube and lead to early system failure.



The information contained herein is supplied without assuming responsibility for infringement of patents or other rights of third parties which may result from its use. No license is granted by implication or otherwise under any patent or patent rights of Westinghouse Electric Corporation.

WESTINGHOUSE ELECTRIC CORPORATION, ELECTRONIC TUBE DIVISION, ELMIRA, NEW YORK

PRODUCT ENGINEERING MEMO

ETD-6307
February, 1964

FACTORS IN TUNER DESIGN WHICH HAVE IMPROVED PERFORMANCE AND EXTENDED TUNER CYCLING LIFE IN WESTINGHOUSE 7008 TUBES

by
H. Peasley & W. Gerard

Summary

Although the magnetron tube is basically an electronic device, the tuning mechanism or system involves mechanical principles which greatly influence performance. Proper application of these mechanical principles throughout the tuning system has resulted in translating servo commands to tube frequency output with lower torque, reduced backlash and longer tuner life.

In mechanically actuated servo systems using tunable magnetrons, the performance of the drive mechanism plays an important part. The response of the system to a command involves such factors as inertia, friction, and response lag or backlash. Inertia is usually negligible compared to friction. The friction usually is expressed as torque on the input shaft and may be measured in inch ounces. Backlash is the failure of frequency to reverse direction at the instant that mechanical actuation has reversed. Backlash may be measured in terms of degrees of input shaft rotation after reversal of direction before the tube reverses direction of tuning. The ultimate specification for a servo tunable magnetron would include zero torque and zero backlash at the input shaft. Such a specification would greatly simplify the system designers' problems of servo drive, weight, power requirement, etc., and would improve system response.

Westinghouse magnetrons have recently been redesigned throughout the tuner drive system to achieve minimum torque and backlash at the input shaft and to maintain these characteristics over an extended cycle life.

Basically, Westinghouse 7008 magnetrons are tuned by sliding four tuning loops, radially, within the anode in slots or ridge-guide cavities. The tuning of four coupled cavities provides a constant Q over the band resulting in uniform power output, good stability, constant pushing, and good r.f. spectrum across the tuning range. Tuning is accomplished by driving four threaded tuner shafts, radially, through a flexible vacuum seal such as a metal bellows. The threaded tuner shafts are driven by four tuner cylinder assemblies, syncronized by engagement with a ring gear, which is in turn driven through a gear reduction unit from the main input shaft.

This tuning system is illustrated, schematically, in Figure 1 and described as follows:

Rotation of the Gear Box Input Shaft (1) causes rotation of the gear box output Gear (2) which in turn drives the Ring Gear (3). The Ring Gear (3) imparts a rotary motion to each of four Tuner Cylinders (4). Threaded Tuner Shafts (5), within the body of the Tuner Cylinders (4), convert this rotary motion to straight line motion; thus the Tuner Shaft (5) and Tuner Loop (6) are driven radially within the anode slot (7).

SCHEMATIC TUNING SYSTEM 7008

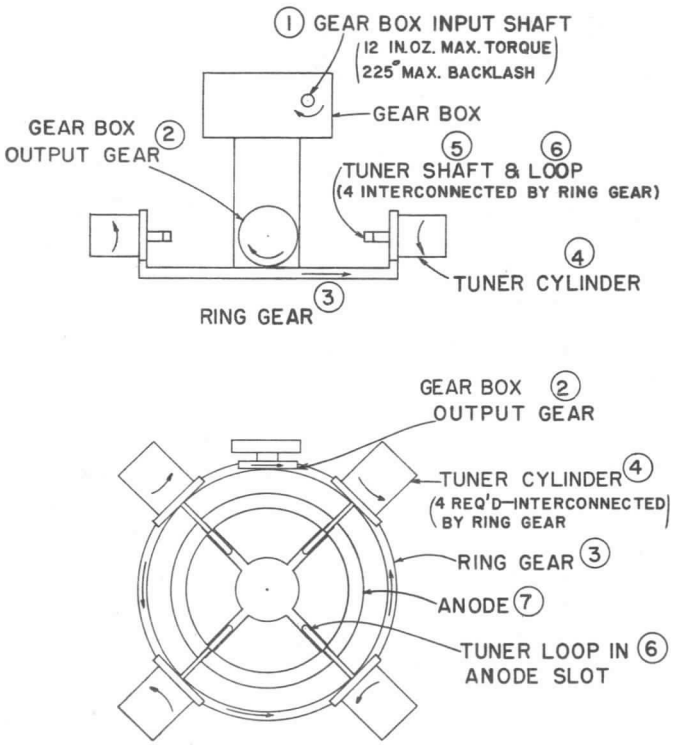

CURRENT DESIGN	NEW DESIGN
1. 12 IN. OZ. TORQUE	1. 6 IN. OZ. TORQUE
2. 180° AVG. BACKLASH	2. 100° AVG. BACKLASH
3. 5000 CYCLES LIFE	3. 20 000 CYCLES LIFE
4. FABRICATE TUNER BEARINGS	4. INTEGRAL PRECISION TUNER BEARINGS
5. BACKLASH & TORQUE DETERIORATE WITH LIFE	5. SPRING LOADED WEAR COMPENSATING
6. SLIDING CONTACT RING GEAR AND RETAINER	6. INTEGRAL BALL BEARING ASSEMBLY

FIGURE 1

A flexible vacuum seal is maintained between the moveable Tuner Shaft (5) and the Anode (7) by a new type metal bellows, not shown (see Figure 3a and 3b).

Radial position of the Tuner Loops (6) within the Anode Slot (7) determine the frequency setting of the tube. Clockwise rotation of the Gear Box Input Shaft (1) tunes the tube from 8500 to 9600 megacycles. The accuracy with which these Tuner Loops (6) must be positioned can be illustrated by the fact that, in the 9445 to 9875 megacycle range, .001 inch of Tuner Loop (6) travel is equal to 8.6 megacycles shift in output frequency.

From the above description of the tuner system it can be seen that there are three areas influencing backlash and torque, namely, (1) Input Gear Box, (2) Syncronizing Ring Gear, and (3) Tuner Assemblies. These three areas are outlined below with a general description of the design changes made in each area to minimize torque and backlash and improve overall performance and life:

INPUT GEAR BOX

Destruction testing the existing design gear box confirmed evaluation of two basic weakspots contributing to relatively short life and backlash, i.e., shaft bearings and gear pitch combinations.

In the redesigned gear box, now used in all Westinghouse 7008 tubes, fine pitch gears are used at points of low torque for maximum reduction. Coarser pitch gears are used at points of higher torque, thus maintaining consistant gear teeth loading throughout the gear train as well as equalizing bearing pressures. Case hardened gears are used throughout. Bearing areas have been increased fifty per cent and porous bronze bearings, impregnated with a special purpose oil, are used instead of graphite-impregnated bronze. All gears are cut to Gear Manufacturing's Standard, Precision Class 1, for smooth, low torque operation.

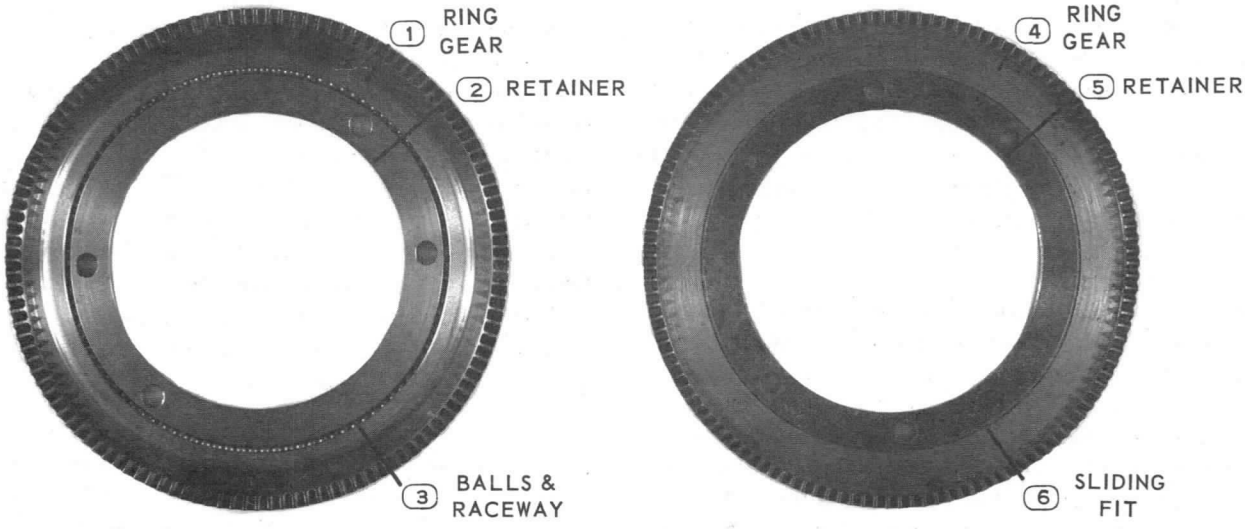

NEW DESIGN
4a

OLD DESIGN
4b

FIGURE 2

SYNCRONIZING RING GEAR

Figure 2 illustrates the old and new ring gear assemblies. In both assemblies the Retainer (2) and (5) is rigidly attached to the anode by means of studs through the four holes shown and serves as a bearing surface for the rotating Ring Gear (1) and (4).

In the old design, Figure 4b, the Ring Gear Retainer (5) was of graphite-impregnated material with a sliding fit at (6). This sliding fit, along with the adverse affects on lubrication due to temperature extremes, contributed considerable torque, and subsequent wear, to the drive system. In the redesigned assembly, Figure 4a, the Ring Gear (1) rotates on the Retainer (2) through ball bearings at (3). Precision raceways, designed to carry both thrust and radial loading, are machined on the inside diameter of the Ring Gear (1) and on the outside diameter of the Retainer (2). Precision balls are then inserted in the raceways and permanently "locked in" by a special rolling technique, thus obtaining an integral ball bearing unit. A special purpose lubricating oil is used to provide long life and smooth operation through both high and low temperature extremes.

TUNER ASSEMBLY

The major components used in the old and new tuner redesign are illustrated in Figure 3.

The basic difference between these two assemblies is in the method of obtaining close fits to minimize backlash while maintaining low friction to minimize torque. In the old design (Figure 3b) parts were adjusted for a very tight fit on threads and bearings. In the new design (Figure 3a) the threads and bearings are spring loaded to eliminate backlash without excessive torque. The operating stroke, or amount of tuner travel, is the same in both assemblies.

In the old design, Figure 3b, the operating stroke was in excess of the capability of the formed type of bellows used. Formed bellows (5) are, as the name implies, formed from one piece of tubing. Welded bellows (1), as used in the new design, Figure 3a, are made up of a number of washers or plates welded alternately as their outside and inside edges. Since the elastic limit of the formed bellows was exceeded at each end of the operating stroke, a push-pull action was required through the Drive Cap (10) thread and the Inner Tuner Cylinder (8) bearings (7 and 9). A no-

allowance adjustment was required on the Inner Tuner Cylinder Bearings (7 and 9) and the tuner shaft thread was adjusted by a Expansion Screw (11) in the split threads of the Tuner Drive Cap (10) to minimize backlash. Both adjustments resulted in sky rocketing torque. Any wear, including initial "break in," increased backlash directly.

In the new design, Figure 3a, the Welded Bellows (1) are fabricated in the closed position as shown. When assembled with its mating parts it is extended somewhat putting spring tension on the tuner threads and bearing in same manner as an extension spring. In this manner, spring tension toward the center of the anode is maintained throughout the operating stroke. Pressure due to vacuum adds to this spring tension on threads and bearings eliminating backlash, minimizing torque, and serving to take up wear in both as it occurs. The automatic take up of wear in this critical area of the tuner drive system appreciably improves backlash over the life of the tube.

The other major improvement in the new design tuner assembly Figure 3a, is in the tuner bearing. Here, as in the ring gear assembly, Figure 4a, ball bearing races are machined directly on the Inner Tuner Cylinder (3) and the bearing 3a assembled as an integral unit capable of carrying combined thrust and radial loading.

From the above description of Input Gear Box, Syncronizing Ring Gear and Tuner Assembly, it is readily apparent that some components in the new design are considerably more expensive than those used in the old tuner assembly. Welded bellows cost approximately four times as much as formed bellows. Integral assembled ball bearings are considerably more expensive than sliding fits. However, the overall design permits fewer parts, less initial adjustment and readjustment, is less susceptible to the human element involved, to such an extent as to result in a better functioning tube with an extended life at lower cost.

In addition to the improvements made in the tuner drive system, considerable development work has been done to develope a tuner loop configuration which is rigid from the standpoint of positioning accuracy. The old tuner loop contributed up to 60 degrees of backlash to the drive system. Contact pressure has been reduced resulting in lower torque throughout the tuning system and greatly improved tuning stability throughout tube life.

Figure 4 graphically illustrates an average relationship of tuner torque and backlash versus cycle life. Production tubes are currently being tested to destruction to determine life expectancy. Operating cycling tests have been tun in excess of 45,000 cycles with good stability and within initial specification in torque and backlash.

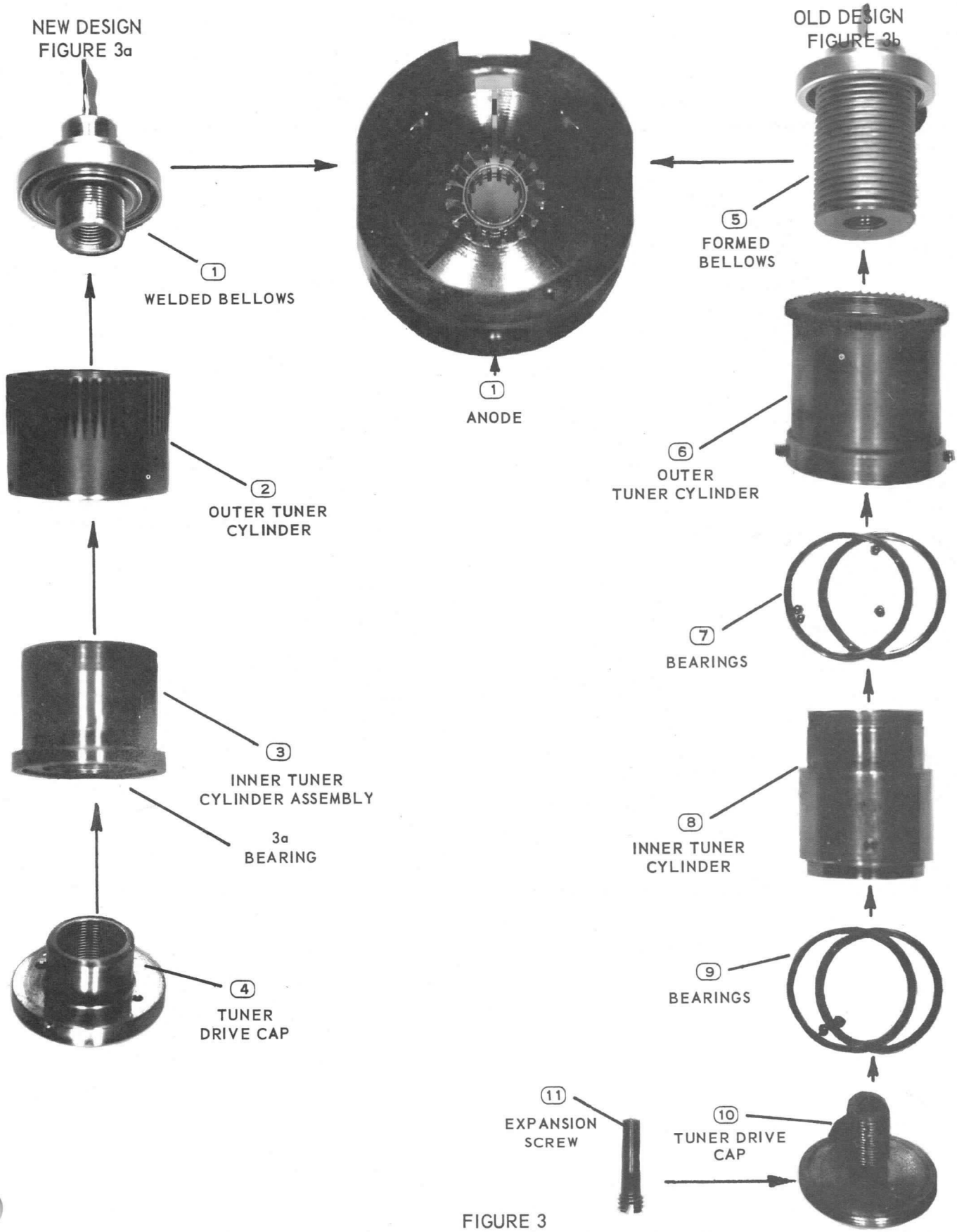
NEW DESIGN
FIGURE 3a
OLD DESIGN
FIGURE 3b
1
WELDED BELLOWS
1
ANODE
5
FORMED
BELLOWS
2
OUTER TUNER
CYLINDER
6
OUTER
TUNER CYLINDER
7
BEARINGS
3
INNER TUNER
CYLINDER ASSEMBLY
3a
BEARING
8
INNER TUNER
CYLINDER
9
BEARINGS
4
TUNER
DRIVE CAP
11
EXPANSION
SCREW
10
TUNER DRIVE
CAP

FIGURE 3

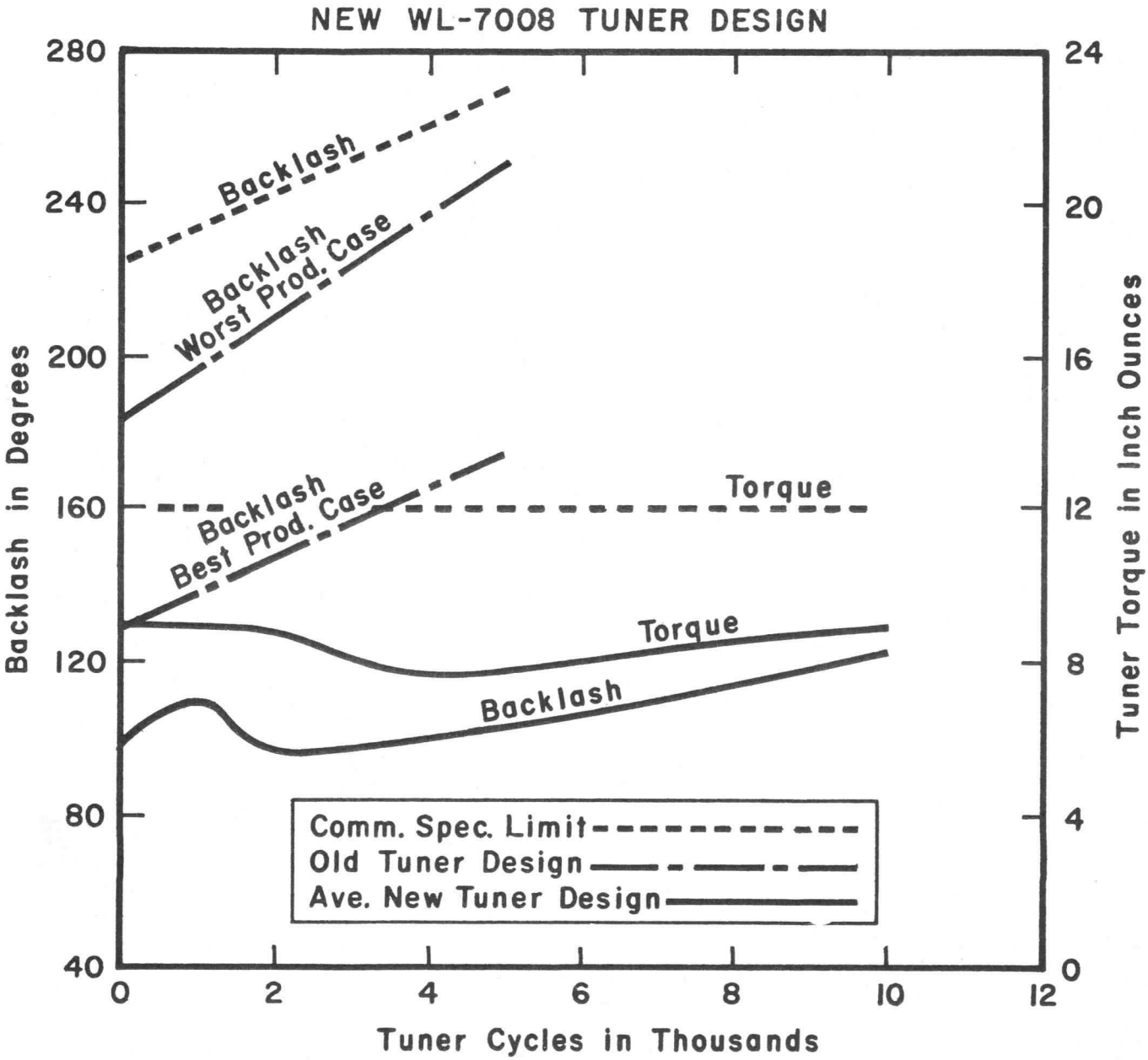
NEW WL-7008 TUNER DESIGN
Backlash in Degrees
Tuner Torque in Inch Ounces
Tuner Cycles in Thousands
280
240
200
160
120
80
40
24
20
16
12
8
4
0
0
2
4
6
8
10
12
Backlash
Backlash Worst Prod. Case
Backlash Best Prod. Case
Torque
Torque
Backlash
Comm. Spec. Limit
Old Tuner Design
Ave. New Tuner Design

FIGURE 4

THE PROTECTED POLE REDUCES MAGNETRON ARC BURSTS

by
W. A. Gerard & M. Yonko

Summary

The design of all 4J50 and its generic types is such that pole piece erosion due to arcing takes place. The detrimental effects of this erosion include reduced life and system failure. A new preventative for erosion has been introduced in the WL-7008 and WL-7111 which improves system performance.

When the 4J50 magnetron was first developed, the pole pieces were extended close to the interaction area. This provided a short gap for the magnetic circuit and allowed a relatively small weight for this 250 KW X-band magnetron. This design set a pattern for all tubes in its category, and the design of the 7008 and 7111 magnetrons follows the original example. The consequence for not following is a rapid rise in magnet size which has proven unacceptable to system designers.

Let us examine this design and consider the chief side effect of this weight saving scheme - arcing. Figure 1 shows a typical design that has been used by all manufacturers of tubes in this class.

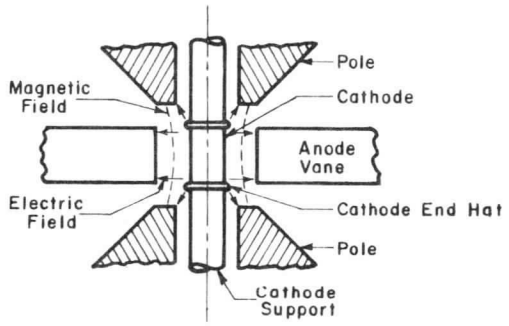

INTERACTION GEOMETRY
FOR
4J50 TYPE MAGNETRONS

FIG. 1

Note that the spacing from cathode end hat to pole tip is short and that the electric field and magnetic field are parallel. Arcs are caused by emission from the end hats driving gas from the pole tips. End hat emission develops as barium is evaporated from the cathode. This build up of end hat emission is suppressed as much as possible but still remains as a first cause. The arc is usually sufficient to drive off the local emission products and were it not for the effects on the iron pole, would be a single random event. When the iron pole is arced to, iron is evaporated onto the cathode, where it lowers emission and onto the anode where it lowers the Q. (This loss of Q causes a slow degradation of power with operating life.) Iron contains large amounts of oxygen. This oxygen is released by the arc and serves to poison the cathode. The rise in gas level in the tube can be 3 - 5 orders of magnitude and makes subsequent arcing on the succeeding pulses likely. This train of arcs often causes radar systems to become inoperative and overload circuity to function.

Westinghouse approached this problem in two ways. New end hat materials were developed which operate at lower temperatures due to better thermal emissivity (less emission) and contain materials which have a poisoning effect on emission on the end hat without harming the cathode. These materials have lowered arc rates and eliminated the danger of system failure due to "cathode memory." The other approach was to find a practical way to cover the exposed areas of the pole piece with a refractory material.

After considerable development, Westinghouse has introduced these clad poles into production. Figure 2 illustrates the appearance of the protected pole piece. The effect is a greater safety factor in system operation. Random arcing will not produce showers of iron and oxygen on the anode and cathode of the tube. Arc bursts are reduced. The sag in power with life is corrected since the source of iron is removed. The refractory is sufficient to resist melting under arcing, it does not contain copius gas, and is not harmful even if evaporated on anode or cathode. It is thin enough to leave the spacings and magnetic field shape intact. This important improvement cannot be viewed from the outside of the tube, is not easily related to specified parameters, but greatly enhances the system performance of the tube and extends system life. This is now available in standard Westinghouse production magnetrons.

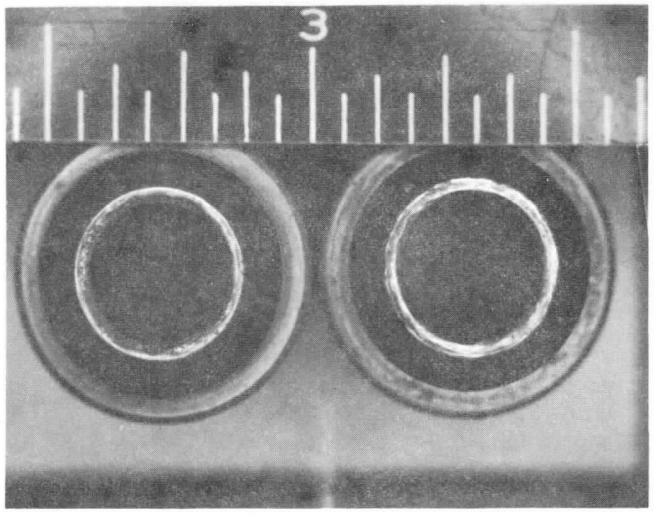

FIG. 2

Pole piece tips from X-band magnetrons at 4X magnification. Unprotected pole at left shows mottled appearance of electron erosion. Protected (refractory clad) pole at right shows smooth appearance of formed part. Arcing occured on each part but arc marks do not show even at this magnification.

PRODUCT ENGINEERING MEMO

ETD-6304
October, 1963

IMPROVED VACUUM DESIGN REDUCES MAGNETRON SEASONING REQUIREMENTS

by
W. A. Gerard & M. Yonko

Summary

Field returns receive careful analysis. Questions raised by marginal performance of return tubes let to redesign of vacuum envelope in WL-7008 and WL-7111 magnetrons. Resulting redesign improves shelf life and lowers break-in requirements.

Westinghouse has manufactured 7008 and 7111 magnetrons for several years. During this time small quantities of field returns are periodically retested and examined by the manufacturing department. A number of tubes were found to have a common problem. These tubes showed rapid initial improvement and were capable of passing initial specifications after a few hours of seasoning. Seasoning may be described as the process of gradually raising the operating level of the tube until full input levels are reached. An item of importance to note is that all tubes requiring seasoning had a gas level reading at the time of return much higher than at the time of initial manufacture.

Gas level in a tipped-off tube may be of three origins:

1. a leak - continuous path through vacuum envelope.
2. a "virtual" leak - a path between a small void and the main vacuum chamber.
3. slow outgassing of a tube material - a continuing chemical process.

Some of the return tubes were then held, rather than being returned to the field. Gas tests were made on the magnetrons. The method for testing the diode magnetron is to operate the cathode positive at a high potential with magnets at normal flux levels. This, in effect, makes the magnetron an ion pump. Sensitive meters may be used to read the ion current which has been generated by collisions of orbiting electrons with gas molecules. The readings are recorded and serve as a reference point. The magnetrons were held for a month and the gas test was repeated. The result is a small, but significant, rise in the ion current reading. Retest of the tube still shows the tube within specification. Since the tubes have been in the field six months or longer, virtual leaks and slow outgassing are less likely.

Bad leaks can be detected by retubulating the tube and employing a helium mass spectrometer leak detector. In many of the cases, no leak was found. Since minute leaks may be accompanied by leaks of greater magnitude, a careful compilation of all tube leakers in production was made. The frequency of leaks pointed

to a number of areas, but the joints involving the iron pole pieces were most frequently found to leak. Let us examine the design used in the WL-7008 and WL-7111 until October 1962 shown in Figure 1.

The design required an iron having a high flux density to attach to flats on the magnets and form a field distribution for electron interaction. The design, while widely used in the industry, has a number of weaknesses. One is the flat to flat braze joint which can easily have voids and cannot be inspected. The other is that irons tend to be dirty and can have slag inclusions that can form leak paths even through heavy sections. These usually occur in the direction of rolling. A new design was introduced which eliminated both of these undesirable features.

The new design, shown in Figure 2, is also found in the industry. The pole is replaced with what amounts to three pieces, an inner pole which is entirely within the vacuum, a cylinder which is the vacuum envelope, and an outer adapter with is entirely external.

The possibility that slag lines will penetrate the vacuum envelope is greatly reduced since such lines tend to be axial (in direction of material rolling). The diameter braze is in compression and can be inspected for proper wetting.

The results of this change were immediate in reducing inplant leakers. As the new tubes were sent into the field, returns were watched to see if the previous trouble with an occasional tube going gassy continued. After a year in production with the redesigned pole piece, it seems safe to report that an important improvement in tube quality has been achieved. Now a greater percentage of tubes will not deteriorate in storage and will exhibit full specification performance many months after leaving the factory without seasoning. This improvement was possible because engineers were not satisfied with merely reparing tubes by seasoning them, but searched to correct the hidden problem that impared their quality.

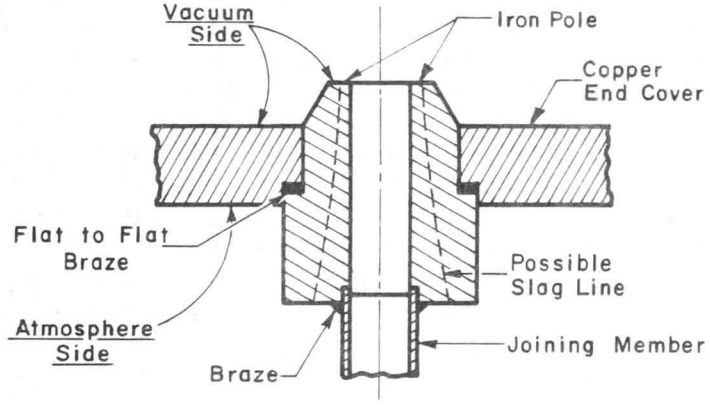

OLD POLE PIECE DESIGN

FIG. 1

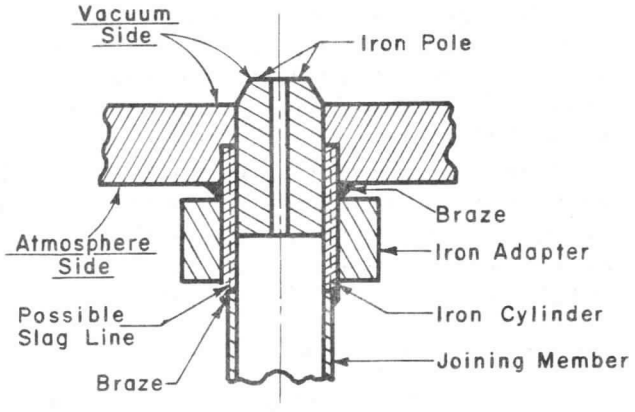

NEW POLE PIECE DESIGN

FIG. 2

HIGH FREQUENCY VIBRATION

by
W. A. Gerard

Summary

The effects of mechanical resonance in the cathode support structure of a magnetron have serious consequences in reducing life. By damping these resonances, an improvement in WL-7008 and WL-7111 magnetrons has been achieved. A simple method of providing this is discussed.

One approach to a problem is to ignore it. If a product has a salient weakness, one can limit the degree of testing to one that avoids it. This was the case with many magnetrons. In the case of the 7111 and 7008 the original specifications called for vibration testing to 500 cps in operation. The Westinghouse 7008's and 7111's originally were similar in design to other tubes available on the market. In the Westinghouse tube mechanical resonance of the cathode structure was barely over the 500 cps specification limit.

Tests were performed on Westinghouse tubes and on competitor's products. All tubes exhibited resonances between 600 and 900 cps. Evaluating the tubes tested showed that all tubes had high frequency modulation when operated at this mechanical resonance. All tubes became unstable and rapidly deteriorated when held at a 3 G level in the cathode structure resonance. The effect on frequency modulation is shown in Figure 1. When a tube is vibrated a number of events occur. All members, individually or in concert, have some mechanical resonance. This mechanical resonance occurs when the natural period is close to the driving vibration frequency. Energy is stored in the structure causing it to increase in amplitude of motion compared

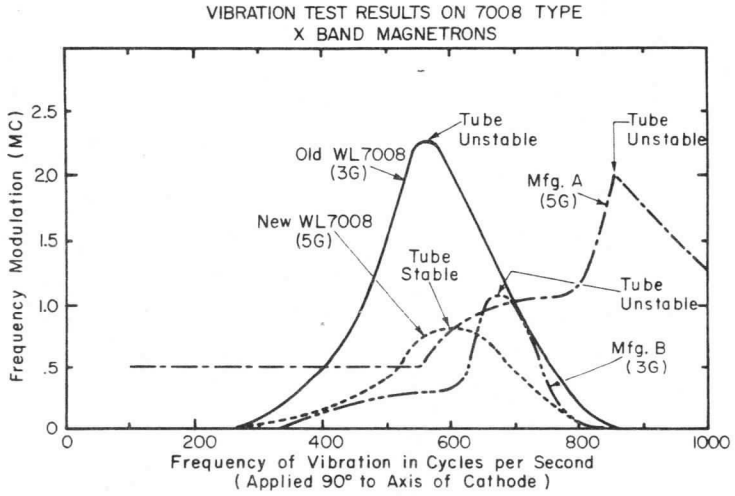

Figure 1

to non-resonant portions of the assembly. This increased amplitude when applied to the cantilever type cathode structure, can cause the cathode to swing close to the surrounding anode structure. This enhances the ability of the tube to arc. The increased amplitude also can shake loose particles, such as particles in the heater insulating coating. These particles become charged and are attracted to the anode potential areas, leading to further arcing. The relative motion of the cathode causes a distortion of the interaction area. This distortion wraps the pushing characteristics of the tube, leading to a change in frequency. The change in frequency is roughly proportional to the displacement from center of the cathode so that the frequency modulation becomes a measure of cathode motion.

Many systems can tolerate some FM. If the receiver bandwidth is narrow or other requirements are placed on the performance, FM may be a definite problem. The system may lose information, in effect experience the FM as missing pulses. The arcing which can accompany vibration also yields missing pulses. If sufficiently severe, the system overloads may function causing the system to drop out of radiation. The arcing also can seriously shorten the magnetron life.

Let us examine the cathode support structure shown in Figure 2 more critically. It was supposed, at first, that the long, relatively slender cantilever arm that the cathode is supported on was merely resonating.

Tests of the cathode support arm alone confirmed this. At this point one might concluded that only major redesign, possibly making the tube non-standard, would have improved the situation. This was not the case, for in testing the tube as a complete unit, it was found that the insulator bulb was also undergoing resonance at almost the same frequency as the cathode support arm. The combined resonance gave a very high amplitude to the cathode and the unsupported end of the support arm. While complete design freedom to change the bulb did not exist, it was determined that the inboard kovar, a sealing member, was acting as a pivot and was the weak link. Constructional features rendered it necessary to leave the kovar "as is." However, it was possible to add a stiff potting to fill in the well between the offending part and the mounting plate.

The effect of the potting compound is shown in Figure 1. Since FM is the best measure of improvement, it is now possible to rate the 7008 and 7111 for operation at 5 G's up to 2000 cycles. Typical FM at the cathode support resonance is one megacycle maximum. Previously 2.5 megacycles was experienced with only 3 G's of vibration at the same resonance. The improvement in stability was equally large. Previously, the tube was marginally stable at 3 G's in the 600 cycle cathode support resonance. Now the marginal area has been shifted to about 10 G's, yielding a large safety factor to 5 G operation.

This improvement was placed in production in 1962. Most system users do not operate with as much as 5 G's vibration at 600 cps on the magnetron. But most airbourne systems do have some appreciable amplitude in this vibration frequency region. Even the reduced amplitude was sufficient to cause some arcs due to loosened particles and spectrum broadening due to FM. The vibration-included arcing has a very real effect on life. We do not know what the final effect of this improvement is, but we are getting longer life reports from the field. We believe that this is the sort of tube improvement that is adding to the field life of the Westinghouse tubes.

CATHODE STEM AND INSULATOR BULB ASSEMBLY

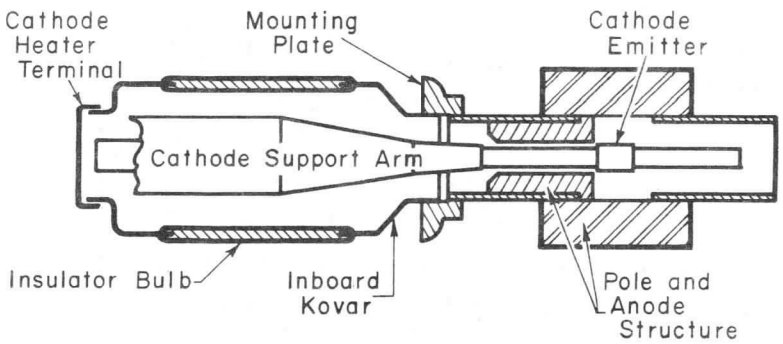

Figure 2

MAGNETRON WINDOW FAILURE

by
J. Duhl

Summary

Window failures on microwave devices are frequently system induced by waveguide breakdown. This mechanism is discussed and suggestions referenced for its control. A comparison of dielectric properties for glass and ceramic shows that ceramic windows are more capable of resisting this type failure.

Window failures in microwave devices have been a source of concern and considerable investigation almost from the inception of the art. A variety of cause and effect mechanisms are described in the literature. These vary from simple mechanical fractures resulting from poorly matched thermal characteristics imposing excessive stress or strain on the window during temperature cycling to complex electrically caused failures such as X-ray punctures[1] and multipactor discharge reactions.[2]

Some magnetrons delivered to Westinghouse for evaluation after service in a particular system were found to be seventy-five per cent window failures. This lot included tubes of Westinghouse manufacture as well as those of other manufacturers. The window failures were identical. Therefore, it is safe to say that this type of failure is independent of the manufacturer. Further, the Westinghouse tubes were compared with reported service on tubes made here in the same weeks but sold to other users and no corresponding failures were found. A single case of window failure at one installation had been experienced. The cause was found to be system induced. These facts say some attention is warranted to the factors under the user's control that can contribute to these failures. Similarly, it is the obligation of the tube manufacturer to make the tube as resistant as possible to these stresses. This is covered in more detail at the end of this paper.

The window failures under discussion are all of the thermal breakdown type known as window suck-in. The suck-in occurs when the dielectric heating of the window exceeds its heat dissipation capacity and results in a temperature rise. See photo. When the window temperature approaches the softening point of the material, a bubble is formed which is towards the vacuum side because of the differential pressure involved. Failure is then inevitable because even if the bubble fails to rupture, the strain induced on subsequent cooling will crack the window. Windows on the magnetrons in question are of Corning 7070 glass, a low loss borosilicate having a higher dielectric strength over a wider temperature range than other glasses.[3]

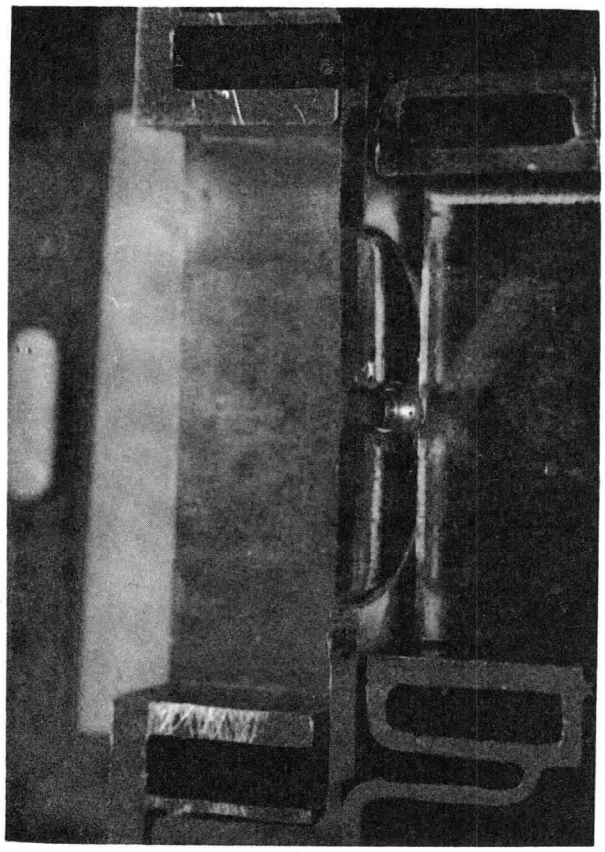

Sectioned view of window and output circuit from magnetron failing in field system. The magnetron flange is to the left, while the tube interior is to the right. Note how the glass has melted and been drawn into vacuum after overheating due to waveguide arcing. Melting occurs in center of window in region of greatest field intensity. The electric vector is perpendicular to the plane of the photo. Photo is tilted slightly to show depth of window puncture.

The sketches below show the mechanism through which dielectric heating of the window occurs. A waveguide that normally presents the proper characteristic impedance termination and, hence, no reflected power will have an electric field E. Now if because of some factor a breakdown occurs in the guide this terminates the line at that point with a impedance approaching a short circuit. The electric field will increase and the voltage gradient produced will cause the arc and attendent ionized air creating the short circuit to move down the guide to the window. Thermal breakdown through cumulative heating then occurs as the electrical energy is transformed into heat. Examination of the window suck-in bears this out as the pattern of the failure follows the concentration of the electric field pattern across the window.

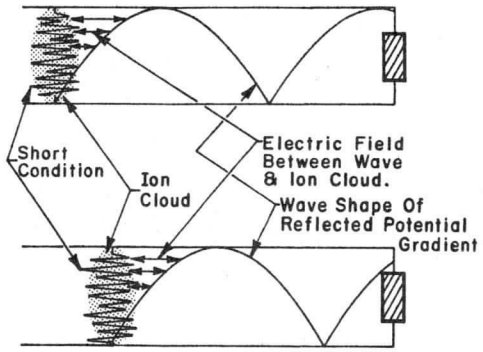

Cause Of Movement Of Arc In Waveguide Toward Window

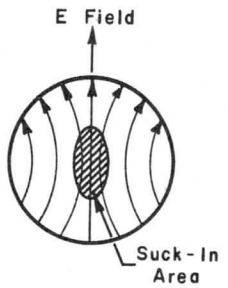

High Field Area In Microwave Window Where Melting & Suck-In Occurs.

CE-A2087

It is evident that window failures will be minimized if means are found that will avoid waveguide breakdowns and reflection of power back to the window. Pertinent advice on this is given in Vol. 9 of the Radiation Laboratory Series[4] where G. L. Regan states:

"In order to study the effect of sharp points, a quantity of fine brass chips whose average size was from 2 to 5 mils was introduced into a waveguide section of a 40 mil gap and tested at a wavelength of 1.25 cm. Breakdown with a large quantity of these 'shop dust' particles present was about one third of that observed before their introduction. The same low figure was observed even after the particles were poured out of the waveguide section. The few remaining particles adhering to the walls were sufficient to maintain the low breakdown power. When these were removed by blowing out the waveguide section with a strong steam of compressed air, the original high breakdown power was again observed. Although these experiments are quite crude, they serve to indicate the importance of carefully removing all foreign particles from transmission line components and serve to emphasize the desirability of removing burrs and rounding sharp corners."

This theme of waveguide imperfections is further elaborated on by E. T. Jaynes[5] in his paper on ghost modes. He finds waveguide imperfections enhance the coupling of higher order mode resonances which contribute energy to the impinging electrons. This energy is converted to joules at the dielectric and thus contribute to window failure.

Asymmetries, sharp corners, burrs, and shop dust all have been found to be powerful factors in lowering the breakdown power of waveguides. In addition to these, alignment can be a crucial factor. The Sperry report[6] states: "A slight rotation of one rectangler waveguide transition with respect to the other is effective in exciting these modes." The subject being the ghost modes resonances mentioned above. The same authority in a different quarterly report gives some observations on the effect of cleanliness of the outside surface of the window toward preventing failures. The effect of even a few tiny drops of oil on the outside surface lowered the breakdown point of a window under test. In this work the windows alone are subjected to tests—they are not installed in devices.

Pressurization of the waveguide with dry air is customary. This increases the breakdown power of the waveguide, prevents corrosion of metal parts, retards fungi growth and is effective in limiting the temperature rise in the window. Regan[4] finds that the electric field E is proportional to the pressure P, that is, E/p is approximately constant. E in this is the breakdown field strength and P the pressure in the guide.

The discussion above indicates the user can protect the magnetrons from window failure by following the correct procedures on selection and use of waveguides, by keeping the external window surface clean and by pressurizing the system, due care being taken toward correct alignment of components and reflected power minimized by keeping the VSWR of the load as low as possible. The avenue to help minimize such failures open to the tube manufacturer is to provide a window whose dielectric and thermal properties will provide increased resistance to such failures. Investigation into this field is currently being made and the graph illustrates the advantage a ceramic window has over glass in this respect. The curves and a fuller discussion of this phase may be found in A. VonHipple—Dielectric Materials and Applications.[7]

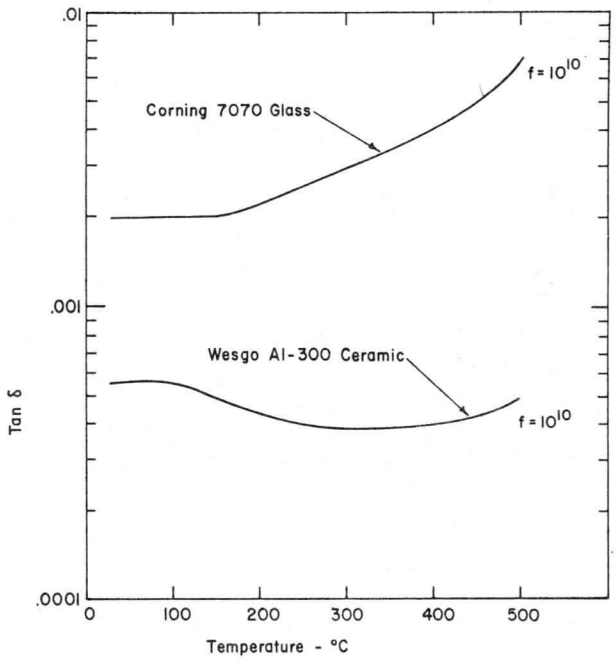

DISSIPATION FACTOR vs. TEMPERATURE
FOR TWO WINDOW MATERIALS
CE-A2088

The dielectric parameter tan δ is the dielectric loss tangent or dissipation factor. The ceramic has a huge advantage over the glass in that it has the extremely high softening point of 1600 °C compared with somewhat above 500 °C for the glass. The softening point of 7070 glass is not given since it is not a point but a range, 750 to 780 °C, and for this case, i.e. under a differential pressure, the actual temperature at the yield point is below the softening range, i.e., about 500 °C maximum[9]. It is expected the ceramic window will be able to withstand successfully some of the inadvertent abuse the magnetrons are subjected to in service. This expectation derives from the fact that the nature of glass as shown by the curves undergoes an increase in dissipation factor with increase in temperature where the change with the ceramic is negligble. This fact and the much higher softening point insure superior performance for the ceramic window.

REFERENCES

1. J. R. M. Vaughan – Some High–Power Window Failures – IRE Transactions PGED – Vol. 8, No. 4, July 1961.
2. D. H. Preist and R. C. Talcott – On the Heating of Output Windows of Microwave Tubes by Electron Bombardment – IRE Transactions, PG ED, Vol. 8, No. 4, July 1961.
3. Electrical Properties of Glasses and Ceramics – Corning Glass Co. – (Corning, New York) publication.
4. G. L. Regan, Microwave Transmission Circuits – Vol. 9, Chapter 4, MIT Radiation Laboratory Series, McGraw Hill Book Co., New York City, 1948, Page 234 – 235.
5. E. T. Jaynes – Ghost Modes in Imperfect Waveguides, Proceedings of the IRE, Vol. 46, February 1958.
6. Sperry Report #NA8240–8182–3 – Third Quarter Progress Report, Investigation of Microwave Window Failure mechanisms and Their Elimination.
7. A. VonHipple – Dielectric Materials and Applications – The Technology Press of MIT and John Wiley and Sons.
8. Wesgo Alumina Insulators, data sheet – Western Gold and Platinum Works, Ceramic Division, 589 Bryant Street, San Francisco 7, California.
9. E. B. Shand – Glass Engineering Handbook – McGraw Hill, Second Edition, 1958.

Plus additional data via phone conversation by Hilmer Heyn to Corning Glass on 7070 glass softening range.

THE COAXIAL MAGNETRON – A NEW TYPE OF TUBE

by
William A. Gerard

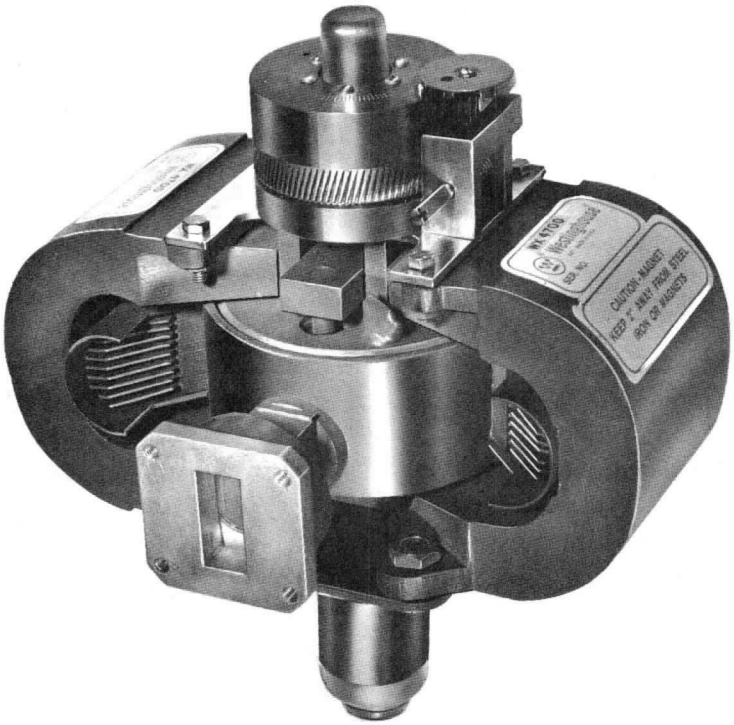

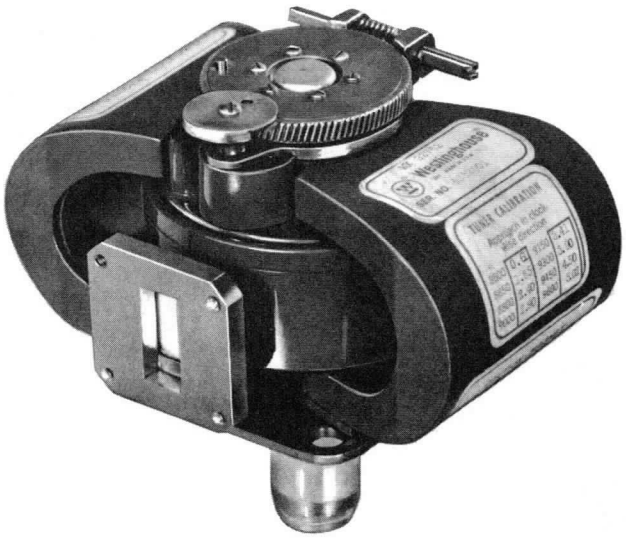

SUMMARY

The coaxial magnetron is an inherently superior design of magnetron. This memo clearly shows the salient advantages of the coaxial structure over the conventional tube by contrasting the theory and application of the two designs. The coaxial types WX-22762 and WX-4700 are shown to replace conventional types 6543 and 7008 respectively with resultant system performance improvement.

THE TE_{011} MODE

The coaxial magnetron is distinguished from conventional magnetrons by an entirely different form of mode control. Conventional magnetron anodes use strapping or rising sun patterns for mode control. The coaxial magnetron uses a TE_{011} mode cavity surrounding the anode for mode control. The TE_{011} mode in cylindrical and coaxial cavities is often called the circular electric mode since the electric field exists only in a circular pattern and there is no radial or axially directed electric field. The mode has also been called the "wavemeter" mode because of its wide use in microwave frequency measuring devices. Thus, the combination of a TE_{011} mode cavity and a magnetron might be said to define a coaxial magnetron.

MODES, MODES, MODES

To the tube user, the work "mode" is frequently a dirty word. The term "moding" usually implies two or more types of operation and, for magnetrons at least, means uncontrolled oscillations at different frequencies. But, to the designer, a mode is a possible manner of operation. First, consider a magnetron which uses a conventional mode solution. This is the strapped anode shown in Figure 1. Electrons are emitted from the cathode and attracted to the anode. The axial magnetic field deflects the electrons into orbits around the cathode. The velocity of the electron drift in these orbits is synchronized with a r.f. wave on the anode. The electrons then give up energy to the r.f. wave and in so doing generate power in the desired mode.

CONVENTIONAL MAGNETRON

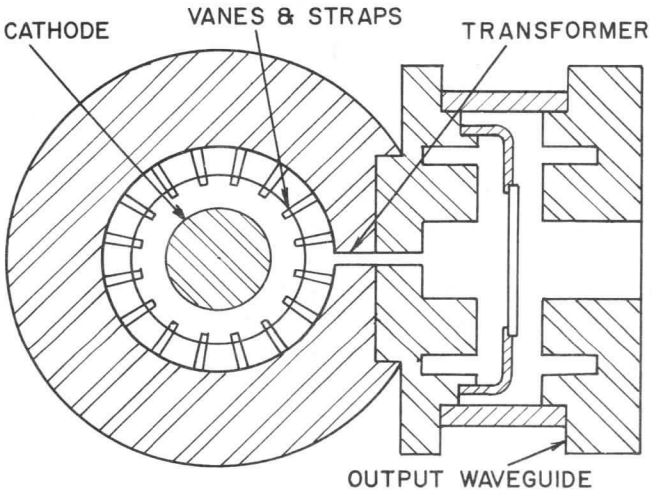

FIGURE 1 CE-A2140

THE MAGNETRON CIRCUIT

The anode must contain a circuit which will provide the correct r.f. voltages at the right places. A series of vanes provides such a circuit. The most desired arrangement of voltages would put alternate vane tips at positive r.f. potential and the interventing ones at negative r.f. potential simultaneously. This is called a "π" mode and gives greatest efficiency. However, other modes are also possible since any distribution of voltages that adds up to an integral number of RF cycles can exist and is, therefore, a mode. The number of modes, including the degeneracies but excluding harmonics equals the number of vanes. One of the factors in power output is the number of vanes with more vanes generating more power. But with more vanes, the modes will be closer in frequency to each other.

STRAPPING AND ITS LIMITATIONS

The most widely used previous solution to mode problems are "shorting straps" between vanes of like polarity. Thus, connections between alternate vanes with metal rings came into use. However, while the straps gave enough frequency separation, they did not provide any damping for undesired modes. (This damping is needed to render the undesired mode weak and slow starting.) The solution was to use small irregularities to couple the undesired modes to the output load. This scheme is very difficult to control and is also limited in how effective the damping will be. Internal damping is not feasible in conventional magnetrons because the troublesome, interferring modes store their energy in the same areas as the π mode and internal damping would not improve the competitive mode picture.

If high power were desired, the designer could increase the number of vanes or physical size or operate at higher voltage, or at higher current densities. In each case, the limitations of mode control or voltage breakdown often made the design marginal. The same sort of limitations were often encountered by designers attempting to reduce size and weight.

THE TE_{011} MODE CONTROLLED MAGNETRON

In Figure 2, an example of a TE_{011} mode controlled magnetron is sketched. This tube has standard construction with the cathode central and vane lined anode surrounding the cathode. Slots connect a TE_{011} mode coaxial cavity to alternate anode-resonators, driving them in phase by the circular currents in the TE_{011} mode cavity. The other anode-resonators are coupled inductively to the driven ones. The effect, in the interaction space, is for the voltages to appear as the π mode field of the conventional magnetron. Several important differences exist, however:

1. Most of the energy is stored in the TE_{011} mode cavity rather than in the vane area so that frequency is controlled by the TE_{011} mode cavity.
2. The system may be tuned by tuning the TE_{011} mode cavity only. Tuning is accomplished by a non-contacting plunger. Conventional magnetrons are tuned in the anode area which is less reliable.
3. There is less limitation by the number of vanes employed since mode separation is controlled in the TE_{011} mode cavity and not in the vane area. Conventional strapped magnetrons are usually limited to 16 vanes, while coaxial magnetrons have been built with over 100 vanes. Power handling potential is accordingly higher.
4. The unloaded Q of the coaxial magnetron system is much higher than that of a conventional magnetron. In a typical X-band coaxial magnetron the unloaded Q is 6000 to 8000 while in the conventional magnetron the unloaded Q is 1000.
5. There is a reduction in the effect of the electron steam on frequency resulting in lower pushing figures. Conventional tubes show 250 kc/amp while the coaxial X-band tube is 50 kc/amp.
6. There is less effect from load reactance. Conventional X-band tubes frequently have pulling figures of 10-16 Mc while the coaxial magnetron exhibits a pulling figure of 2-3 Mc.
7. Coaxial tubes may have higher circuit and overall efficiencies than conventional magnetrons.
8. Coaxial tubes may have longer life because more conservative design is permitted.

The above factors are discussed later in this paper.

COAXIAL MAGNETRON

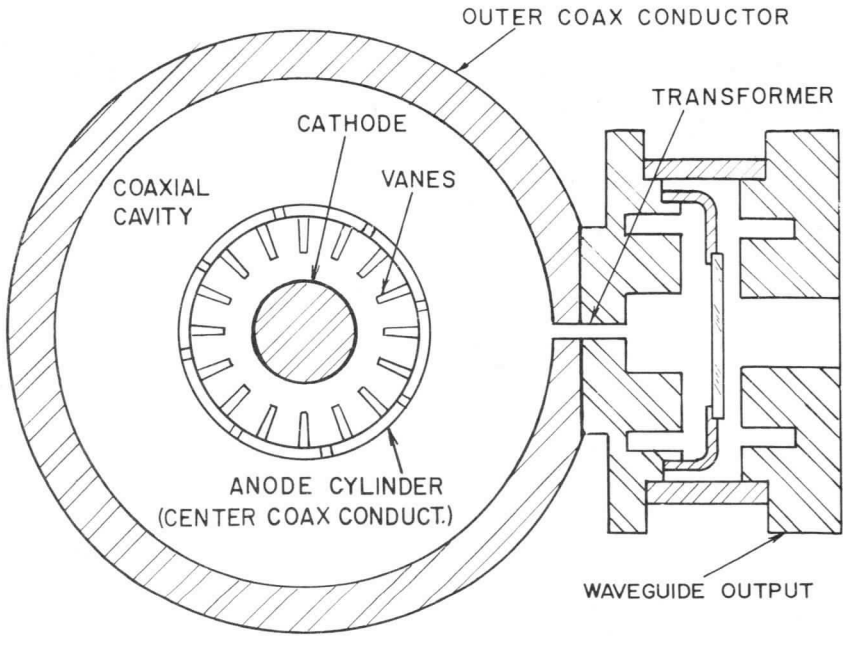

FIGURE 2

As has been stated previously, many modes exist in both conventional and coaxial magnetrons. All troublesome modes may be divided into two categories according to their effect on operation:

1. Competing modes – Modes which can interact with the electron stream and cause power generation.
2. Interfering modes – Modes which degrade operation in the proper mode by sapping power that would otherwise have been coupled into a useful load.

The competing mode problem in conventional and coaxial magnetrons is similar. The interfering mode problem is more important in coaxial magnetrons which have a more complicated mode picture. Fortunately, the ability to control modes in a coaxial magnetron is much greater. Coaxial magnetron modes may be divided into two groups according to source:

1. Modes of the inner vane and slot circuit. (These may be called slot modes.)
2. Modes of the cylindrical or coaxial cavity.

INNER CIRCUIT MODES

The inner circuit of a magnetron (conventional or coaxial) consists of a re-entrant transmission line with periodic obstacles. Resonances will occur whenever the total phase shift around the circuit equals some multiple of 360°. When the phase shift versus frequency properties of this type of circuit are sketched, we have the familar ω-β diagram. Diagrams for unstrapped, strapped, and coaxial magnetrons are shown in Figures 3, 4, and 5. Resonances are indicated by circles. The π mode represents 180° phase shift per vane pair. The other circles represent either more or less phase shift per vane pair. All diagrams are for an 8-vane magnetron. More vanes would add more circles and, hence, more modes. Note that the diagram for the coaxial magnetron resembles the rising sun magnetron which is a form of unstrapped conventional magnetron where alternate cavities are at different frequencies. Note also that the operating point is not part of the inner circuit family of resonances, but is separate, being cavity controlled.

In the portions of the curves which are nearly flat (parallel to the abscissa), interaction impedance is high and possibilities of oscillation are highest. For oscillation, the electrons must drift around the tube synchronously with the electromagnetic wave on the anode circuit. Drift is proportional to E/B (electric field divided by magnetic field) or simply to the anode voltage across the tube where the magnetic field is fixed. These voltages on the diagrams may be described as lines from the origin with slopes related to the respective voltage. Each diagram has the π mode and typical higher and lower voltage modes shown. Note that as the number of vanes increase in the conventional magnetron, the operating voltages for the competing modes move closer to the π mode voltage, but not in the coaxial magnetron. One method of selecting the mode to be used is to control the rate of application of the pulse. Thus, if a lower voltage mode interferes, a faster rate of application (rate of rise of voltage = rrv) may produce clean π mode operation. Similarly if a higher voltage mode interferes, a slower rrv may solve the problem.

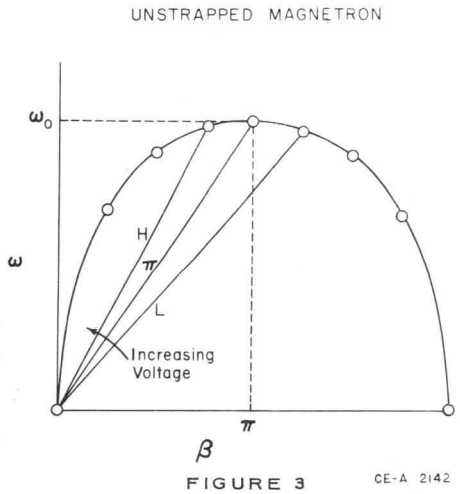

FIGURE 3 CE-A 2142

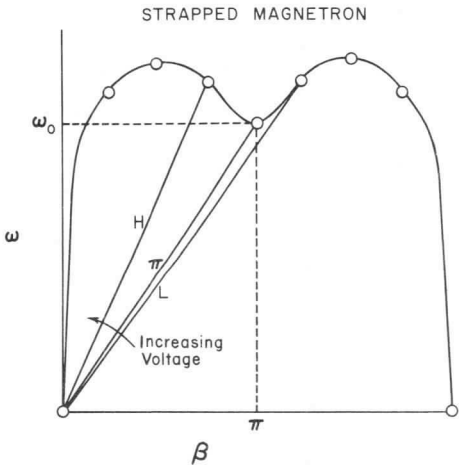

FIGURE 4 CE-A 2143

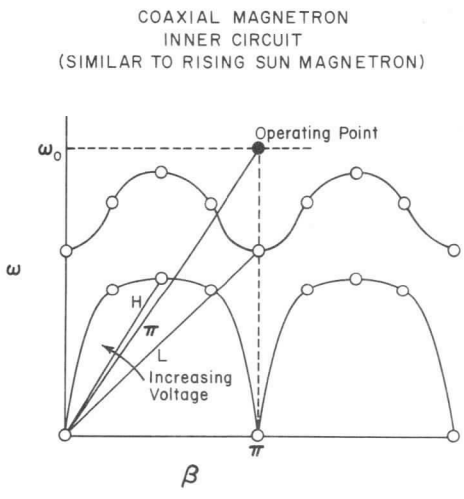

FIGURE 5 CE-A 2144

The tube designer, however, has other tools to control the mode of operation. Since operation is generally favored by high Q modes, if the Q of an undesired mode is lowered sufficiently, the desired π mode will dominate. Figures 6 and 7 illustrate the differences between the conventional magnetron where this loading or damping is done by coupled-in resistance, and the coaxial magnetron where the resistance may be built in. The π modes in each tube are loaded to the normal output circuit. In the conventional tube, devices are used to enable the same output to act as a resistive load on the adjacent and, hence, competing modes. These modes are shown as a quadrature doublet which implies that it is not possible to load them independently but a compromise must be reached which is also dependent on the coupling in the output which has already been set for the π mode. The result is a very difficult compromise with many limitations.

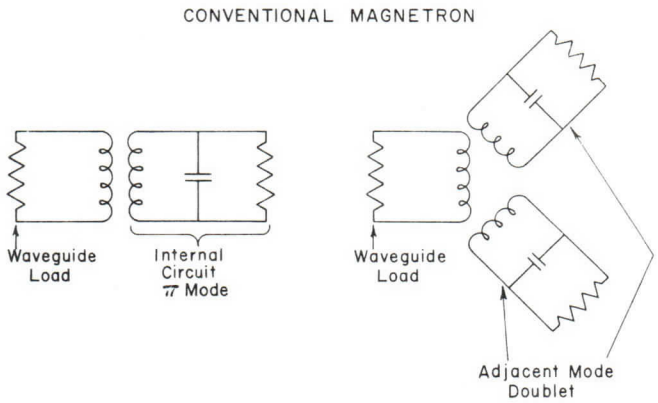

FIGURE 6

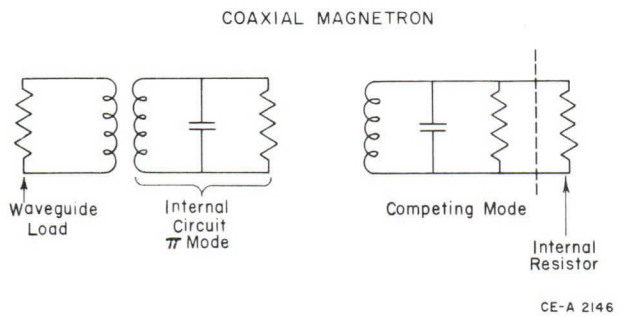

FIGURE 7

In the coaxial magnetron, the internal resistor selectively loads or dampens the competing mode independently from the normal output circuit and the operating mode. Figure 8 shows low the nature of the

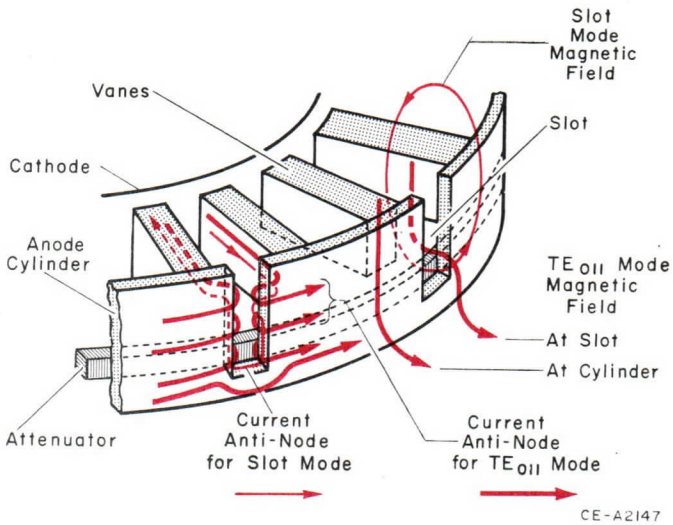

FIGURE 8

TE_{011} cavity mode and the inner circuit or slot mode differ and permit selective attenuation. In the slot mode, current flows along the vanes and into the slots. The end of the slot is a current anti-node and a high magnetic field area. An attenuator placed here will couple to the slot mode. However, the TE_{011} cavity mode does not have strong fields that penetrate the slot at the ends so that the attenuator may be designed to dampen the slot mode without sacrificing the properties of the TE_{011} mode. The same selective properties permit control of unwanted cavity oscillations in like manner. Figure 5 shows that an important slot mode is also a "π" mode and is a lower voltage mode. It is frequently seen at lower current levels or with low rrv. A high voltage slot mode is also present and may be seen with high rrv.

INTERFERING SLOT MODES

While interfering modes in conventional magnetrons occur, they do not present a serious problem to the designer although power variation occurs due to irregularities. In the coaxial magnetron however, the problem

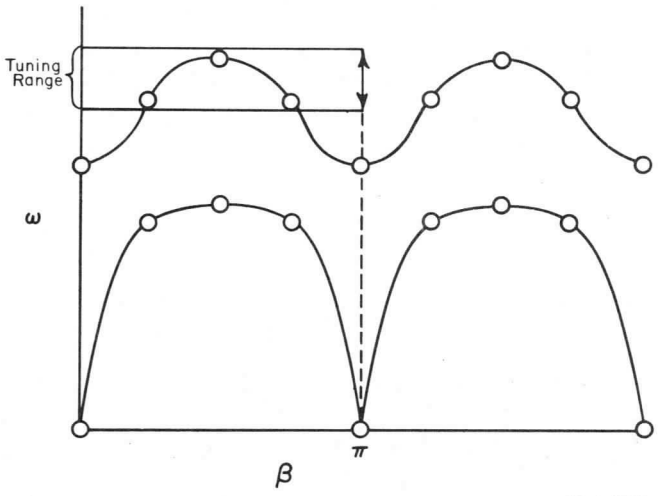

FIGURE 9

is important enough to merit discussion. Figure 9 is a redrawing of Figure 5 with the operating point shown as a line indicating a tunable magnetron. Note that some of the circuit modes are in the tuning range of the tube. If the anode circuit were perfectly symmetrical, these modes would be orthogonal to the desired π mode (TE_{011}) and they would not couple to it. If, however, the circuit contains some irregularities, some or all of these circuit resonances may couple to the desired TE_{011} cavity mode and act as resonant loads on the tube. These loads act to sap power from the tube as shown in Figure 10. It is customary to examine a coaxial magnetron for these dips in efficiency. It is possible with good manufacturing procedure to obtain a smoother, dip free curve from a coaxial magnetron than is usually obtained from a conventional magnetron where some irregularities inherently exist (i.e. strap breaks).

CAVITY MODES

The modes of a right circular coaxial cavity are well known. Some of the modes for the WX-4700 and WX-22762 are shown in Figure 11. The modes may again be separated into competing and interfering modes. The TE modes are most important since they couple into the vane structure. Figure 12 is an ω-β diagram for some of the more important cavity modes. The paragraph on the TE_{011} mode controlled magnetron described how the TE_{011} mode coaxial cavity generates a "π" mode. In like manner the TE_{121} mode generates mode generates a $\pi - 1$ mode field. This mode behaves like the higher voltage mode in a conventional magnetron. The diagram of Figure 12 must be added to the Figure 5 or 9 diagram to get the complete coaxial magnetron mode picture.

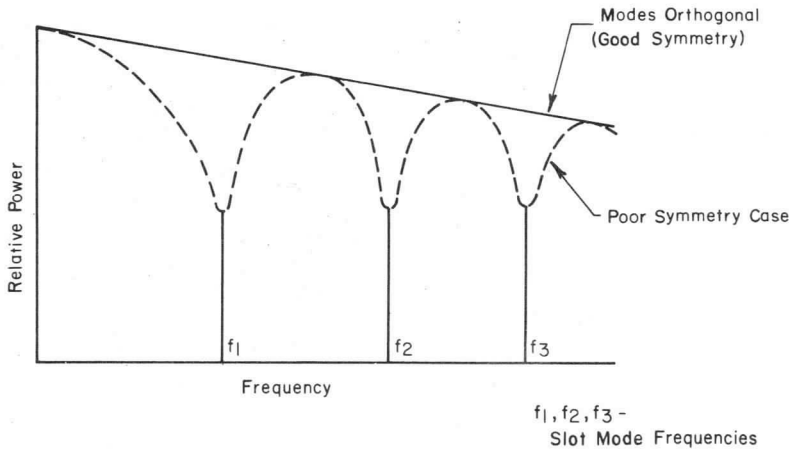

FIGURE 10

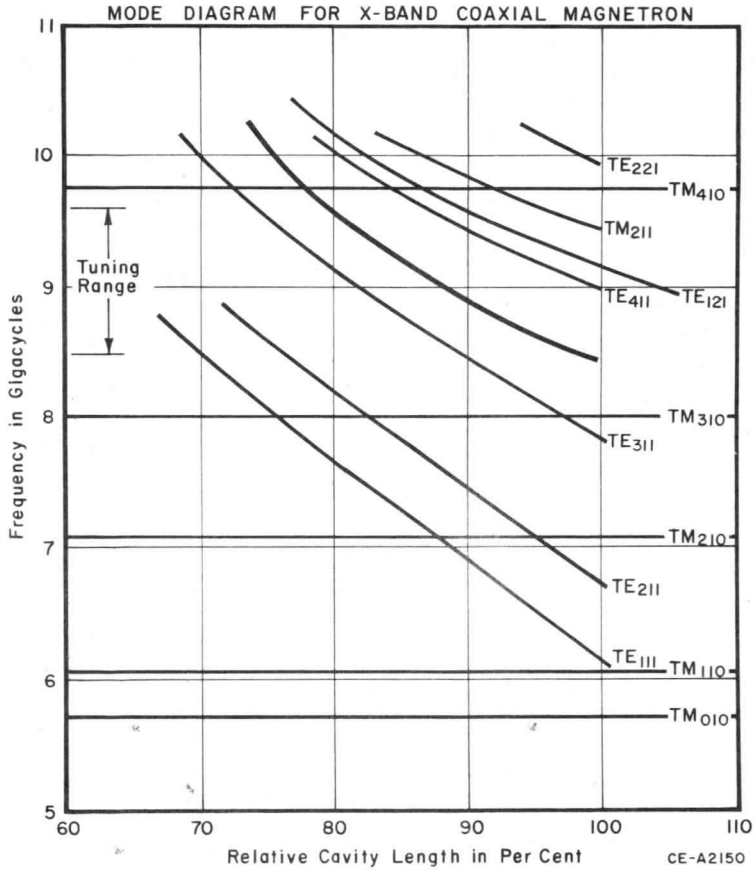

FIGURE 11

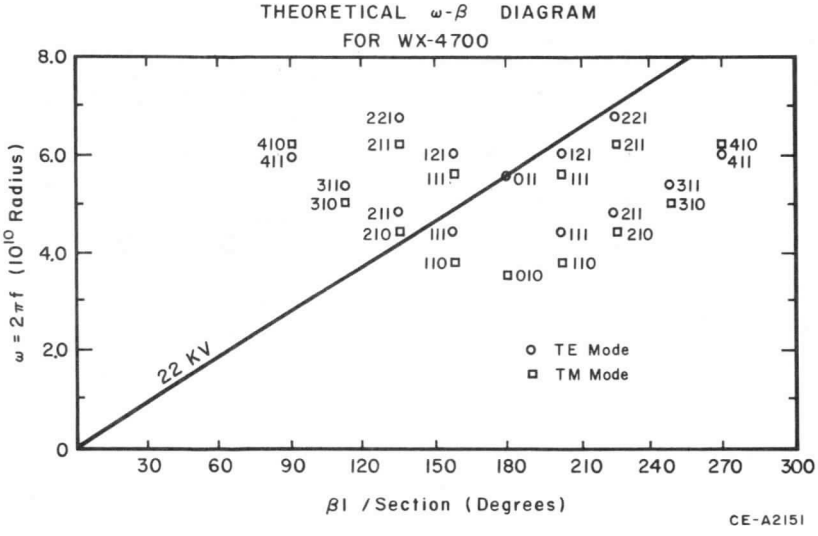

FIGURE 12

SUPPRESSION OF UNWANTED CAVITY MODES

The same technique of selective internal attenuation, as was used to control unwanted internal circuit or slot modes, may be used to control unwanted cavity modes. The views of the cavity shown in Figure 13, below, show the pattern of current flow in the desired TE_{011} mode and in a principal competitor, the TE_{121} mode. Note that current in the TE_{011} mode is everywhere circumferential, and tends to be strong near the center of the cylinders and end covers. The corner currents are both small and circumferential. In the TE_{121} mode, as in most potential competing modes, currents move axially and radially and there are strong currents moving across the junction of the inner cylinder and the end cover. If this junction is broken, it is possible to match a damping resistor or attenuator to the undesired TE_{121} mode with virtually no effect on the desired TE_{011} mode. The net effect is to greatly lower the TE_{121} mode Q to the point where it will not sustain oscillations.

Thus the unique properties of the TE_{011} cavity mode have provided a high Q to a magnetron and have permitted internal mode suppression. Previous design limitations have been greatly extended and more conservative design is permitted. These properties lead to a number of important applications.

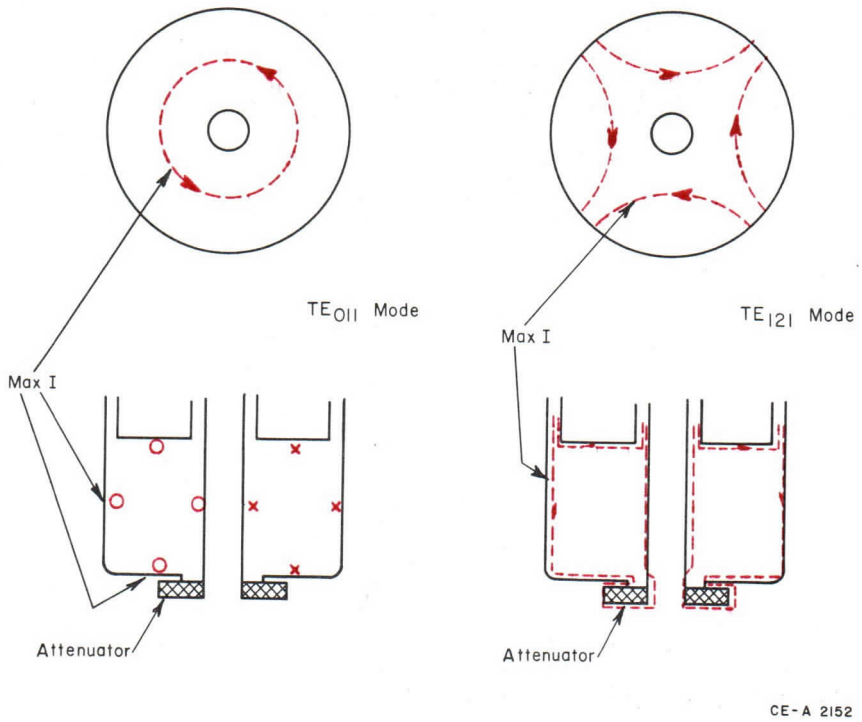

FIGURE 13

FREQUENCY PUSHING

The electron stream has a reactive effect on the operating magnetron. This reactive effect varies with operating current and is called frequency pushing. Frequency pushing can be measured in megacycles per ampere. A plot of operating current versus frequency is the pushing characteristic and the slope of the curve, the pushing figure. This characteristic must be measured dynamically, that is to say under conditions where frequency shifts due to thermal changes are excluded. Figure 14 shows the Pushing Characteristic for a conventional 65 kW magnetron (4J52, 6543 etc.) and for the coaxial WX-22762. In system application, it is not always possible to have ideal pulse shapes. The result of the irregular pulse is shown in Figure 14. If the receiver has a narrow bandwidth, much of the information received in the radar pulse will be lost.

The coaxial magnetron has a lower pushing figure than the conventional magnetron by virtue of its high Q due to the high energy storage in the large coaxial TE_{011} cavity. This means that narrower receiving bandwidths will pass the pulse energy and substantial energy will not be lost due to frequency modulation during the pulse.

PULLING FACTOR

A straight-forward result of the high Q in the coaxial cavity is a reduction in the pulling factor. Pulling factor is the change in tube frequency as a VSWR of 1.5 is varied through all phases. The reactive effects of the VSWR yield the frequency change. It is usually possible to design a coaxial magnetron to operate efficiently with coupling adjusted so that the waveguide has a low reactive effect on the tube. This re-

FREQUENCY PUSHING IN MEGACYCLES

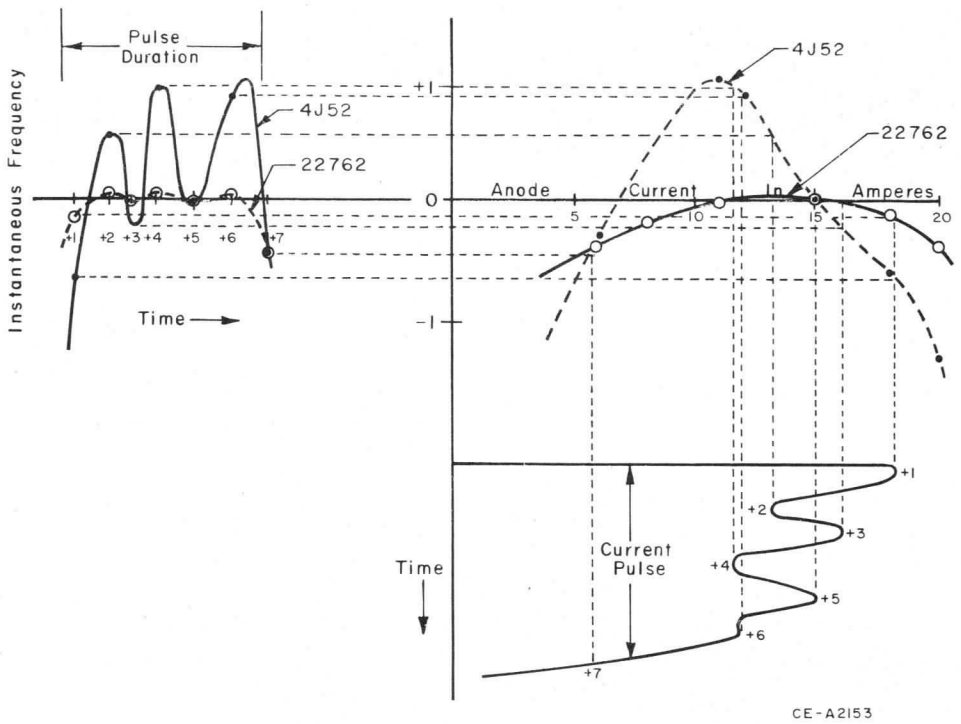

FIGURE 14

duction in pulling factor can be seen when the 2 Mc. pulling factor for the WX-22762 is compared with a 12 Mc. pulling factor for the conventional magnetron.

A corollary, to this property of the coaxial magnetron to resist pulling, is its relative insensitivity to waveguide tuning. A conventional magnetron can be tightly coupled to the waveguide, yielding in X-band a tuning range of up to 75 Mc. where a reflected phase change does the tuning. The coaxial magnetron would require much heavier coupling to the waveguide to accomplish this sort of tuning and this hurts the symmetry of the coaxial magnetron, making this type of tuning less practical.

THERMAL PROPERTIES

Most high power magnetrons have their basic frequency-determining elements made of copper for electrical-conductivity and heat-transfer reasons. Similar performance might be expected between the conventional magnetron and the coaxial magnetron. This is not the case. Reference to Figure 15, shows that the frequency of the coaxial magnetron is controlled by the outer diameter and is much less influenced by the inner cylinder and the vanes. The conventional magnetron is influenced by the vanes and straps which are located close to the source of heat, the vane tips. Note that the *temperature coefficient* of the coaxial magnetron (if we use equivalent frequency controlling locations) will be comparable to the conventional magnetron. But, for equivalent air cooling, the coaxial magnetron performance will be superior, since the frequency controlling element is directly cooled in the coaxial magnetron but not in the conventional magnetron. This results in data such as that shown in Figure 16 which shows that with loss of cooling, frequency changes. But the coaxial magnetron holds frequency better since the heat reaches the frequency controlling element more slowly.

The shorter thermal path usually available in the conventional magnetron makes it easier to keep the hot spot temperature (at the vane tips) down. This puts the coaxial magnetron at a minor disadvantage which is more than compensated for by higher processing temperatures permitted with ceramic insulator design, such as are used in the WX-22762 and WX-4700.

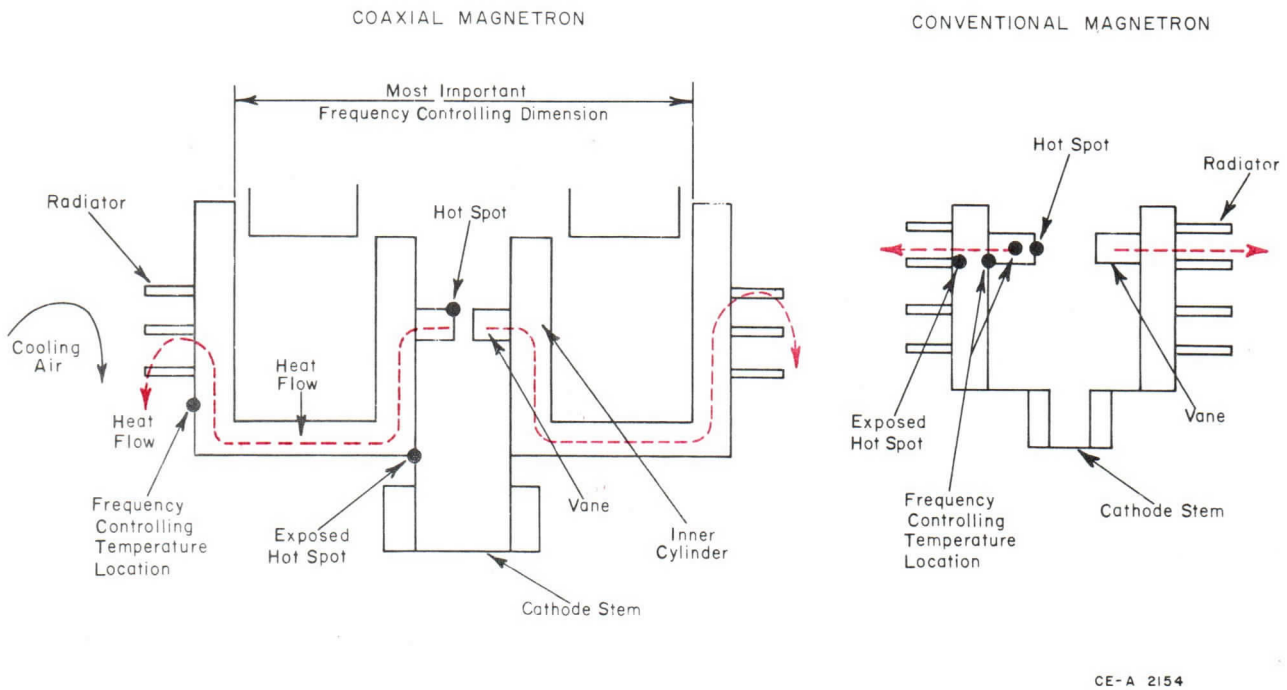

FIGURE 15

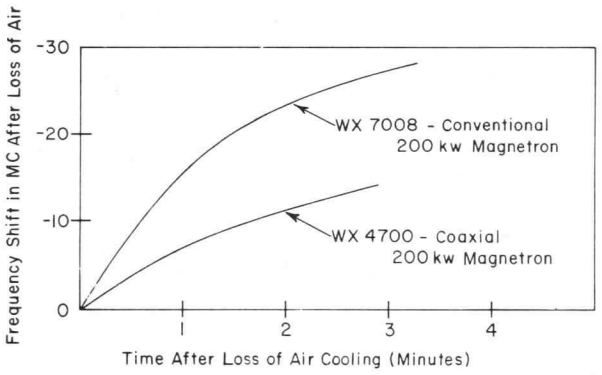

FIGURE 16

RATE OF RISE OF VOLTAGE

As shown in Figures 5 and 12, the various modes of the coaxial magnetron have different operating voltages. When a pulse is applied to a magnetron, the voltage rises and approaches the optimum starting voltage range for the various modes. It then takes a finite time in this range for a mode to start. If oscillations do not build up, the voltage continues to increase and will reach the optimum range for another mode, and so on. This is true for all types of magnetrons. The mode of operation then depends on whether the optimum voltage range has been held for sufficient time. The internal damping attenuators serve to increase the required starting time for unwanted modes. The desired TE_{011} mode in the coaxial magnetron is thus favored, but, since it is necessary to build up energy storage in the large cavity as well as in the vane area as in the conventional magnetron, more "dwell" time at or near optimum voltage is required. This may be accomplished by slowing the rate of rise in a thyratron type pulser, or by use of a hard tube modulator where no appreciable voltage overshoot exists. Examples of voltage pulse are shown in Figure 17.

It may be safely stated that rate of rise of the voltage pulse is not the only consideration. It is often possible to tailor the pulse to obtain less voltage overshoot by use of a "de-spiking" network. Each coaxial magnetron has an optimum range of rise time. In general, rate of rise of voltage from 50 to 125 KV/μsecond are satisfactory for most coaxial magnetrons. Some exceptions now exist, for example, the WX-22762 has been operated successfully on a thyratron type modulator with 250 KV/μsecond on a 0.1 μsecond pulse.

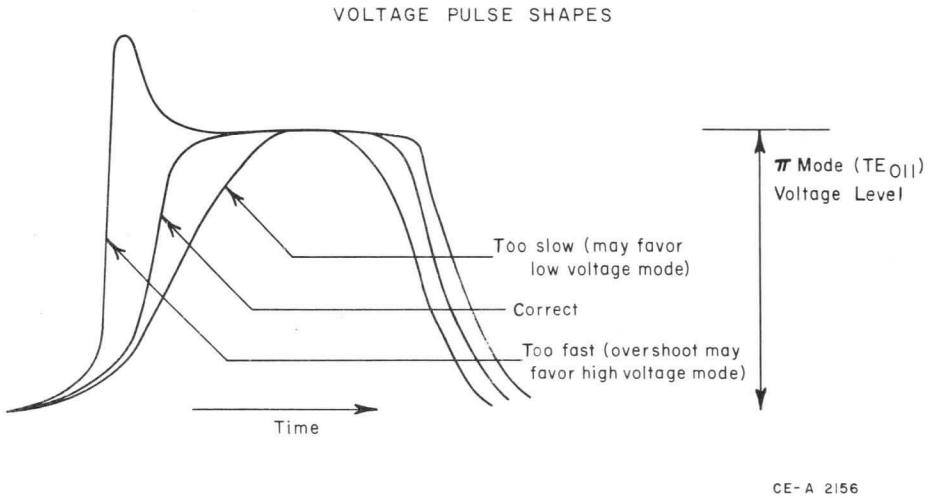

FIGURE 17

Future development will make high rrv values useable in system design. Since the higher rrv values do not allow sufficient time for the TE_{011} mode to start at optimum voltage values, additional means are needed to suppress all higher voltage modes to a greater degree. Then it will be possible for the TE_{011} mode to start at rrv's higher than optimum which is what is taking place when the 250 KV/μsecond was applied to the WX-22762.

JITTER

Jitter is the consequence of poor mode control (starting jitter) and poor frequency stability (pulse-to-pulse frequency jitter). If the probability of a competing mode starting is high, the tube will frequently start oscillation in that mode. If the mode is somewhat dampened or loaded, it will become unstable rapidly as higher current levels are reached and the more stable TE_{011} π mode will break in oscillation. This mode shifting process on the leading edge produces a starting jitter. This jitter can be minimized by choosing an optimum rate of rise and by tailoring the pulse to round the leading edge and eliminate the spike or overshoot as shown in Figure 18. Excellent low jitter characteristics are possible providing optimum rate of rise may be used. In a retrofit application, the rate of rise suitable for operation of the conventional tube may be too fast for the coaxial magnetron replacement to yield equivalent or better low jitter performance. Therefore careful attention to system applications should be given in this area.

Frequency stability greatly favors the coaxial magnetron. Since it is superior in its pushing and pulling characteristics, the ability of the coaxial magnetron to reproduce its frequency from pulse to pulse is superior to the conventional magnetron.

TUNER RELIABILITY

The number of methods of tuning a conventional magnetron are legion. Several methods are most important in terms of usage, such as the contacting and non-contacting pin tuners and the coupled cavity tuhers. In every case, the conventional magnetron tunes in either a high voltage or high current area. In the coaxial magnetron tuning occurs in a low current, low voltage area where current flow is parallel to the mechanical break. This is a very important feature since there is no tendency to arc across the gap nor is there danger of losing contact. In the contacting pin tuner, shown in

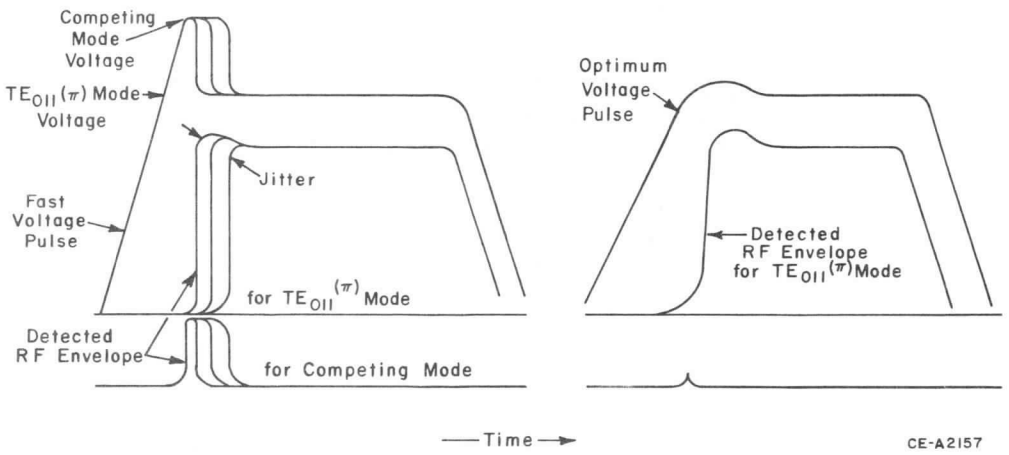

FIGURE 18

Figure 19, interruption of contact at any of 16 pins can cause arcing, galling, or mode instability. A similar tuner used in the 200 KW X-band WL-6249B uses non-contacting pins. Here the problems exist in reverse; should a single pin contact (or merely be poorly aligned) the same arcing, galling and mode instability can result. In both cases the tuners tend to run hot due to r.f. losses. The coaxial magnetron tuner is in a low r.f. loss area and does not depend on contact or lack of contact for proper operation.

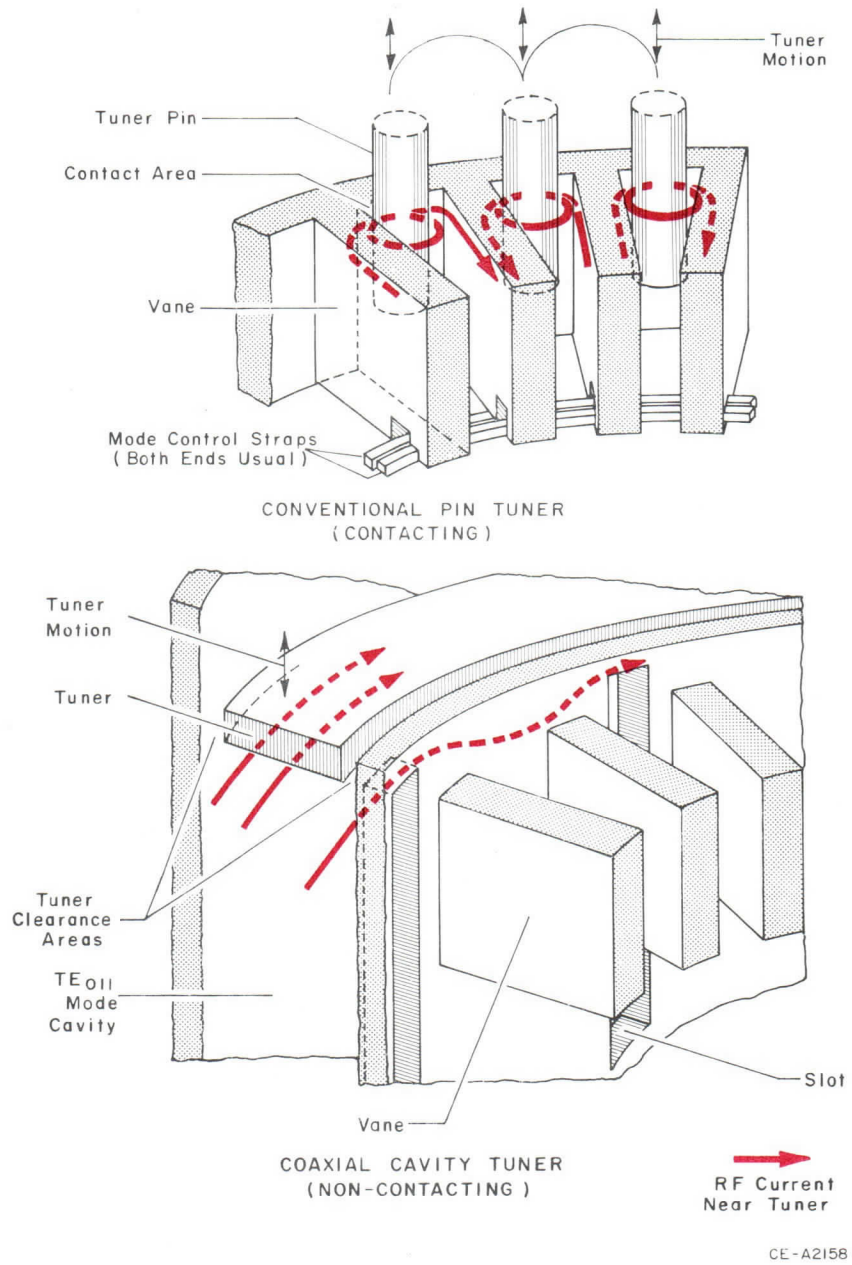

FIGURE 19

POWER OUTPUT

Due to the high internal Q (Qo) and the uniform r.f. structure, the coaxial magnetron is potentially more efficient than a conventional magnetron. However, in a tube designed for retrofit applications, it is desirable to match both input and output conditions since the modulators have been designed to operate at a given level and the output waveguide also has been designed to operate at a fixed range. Both the 70 KW WX-22762 and the 250 KW WX-4700 are designed to match the power output characteristics of older conventional magnetrons. Coaxial magnetrons often have interferring resonances in their operating band which can cause dips in power. When these resonances are controlled, the coaxial magnetron exhibits superior control over fine structure power variations than the conventional magnetron. Figure 20 shows that coaxial magnetron performance can extend beyond normal frequency ranges.

MECHANICAL INTERCHANGEABILITY

The WX-22762 is designed to be interchangeable with the type 6543; the WX-4700 is designed to be interchangeable with the type 7008. Figure 21 shows the size comparison between the tubes.

It is seen that the WX-22762 provides a close fit for the type 6543; the WX-4700 a nearly exact fit for the type 7008. The large TE_{011} mode cavity is a basic limitation in making the WX-22762 a better fit. Careful design has made the fit interchangeable in significant dimensions such as bulb length (A), magnet size (B), waveguide location (C) and (D), tuner location (E), radiator location (F), and radiator attachment configuration (G).

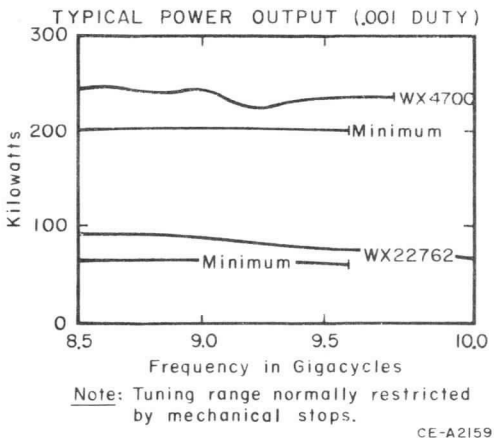

FIGURE 20

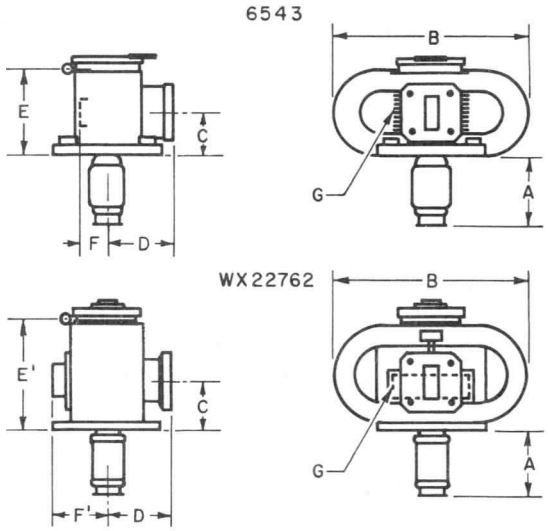

KEY DIMENSIONS ARE IDENTICAL WITH EXCEPTION OF TUNER LOCATION E' = E + 3/8" AND RADIATIOR LOCATION F' = F + 7/8. OTHER MOUNTING DIMENSIONS ARE DIRECTLY INTERCHANGABLE.

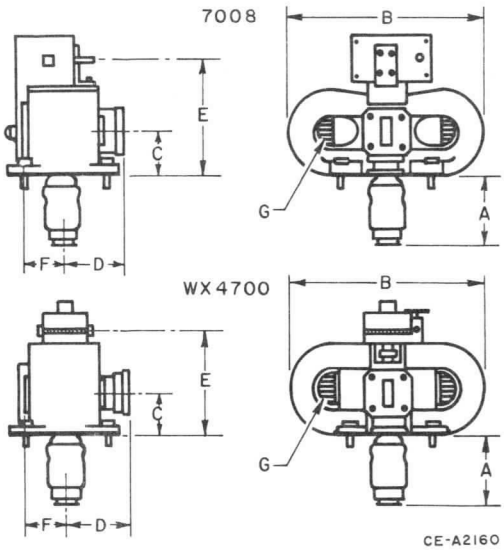

KEY DIMENSIONS ARE IDENTICAL AND MOUNTING DIMENSIONS ARE DIRECTLY INTERCHANGABLE.

FIGURE 21

References:

"The Circular Electric Mode Magnetron" J. Feinstein and R. J. Collier Pg. 123 "Crossed – Field Microwave Devices" Edited by E. Okress 1961 Academic Press.

"The Coaxial Magnetron, A Superior Microwave Power Source" H. M. Olson and L. H. Von Ohlsen WESCON 1962.



PRODUCT ENGINEERING MEMO

ETD-6504
July, 1965

Dither TUNING FOR MAGNETRONS

by
D. F. Aldrich
W. A. Gerard

Summary

Dither tuning is a means of obtaining narrow band rapid tuning during operation of a high power pulse magnetron. It is built into the magnetron and may be applied to both fixed frequency and mechanically tunable tubes. When applied to a mechanically tunable magnetron, the *Dither* control is separate and independently controlled. Activation of *Dither* tuning is electrical and control may be part of a servo loop.

APPLICATIONS

Dither tuning should be considered where pulse to pulse frequency changes are desired. Mechanical tuning systems are capable of 500 MHz per second frequency change while *Dither* tuning is capable of 40,000 MHz per second or greater. With Mechanical tuning, frequency change is so slow that consecutive pulses look almost alike in frequency to the radar system in terms of system performance and its target. In many cases a change in frequency will improve the radar's capability of tracking its target, avoiding clutter, minimizing sea return, avoiding target scintillations, and improving target positional definition. These problems arise in many applications.

1) Air to Air radars.
2) Surface to Surface radars.
3) Air to Ground radars.

In every case, *Dither* tuning provides a means of improving radar system performance over a fixed frequency or purely mechanically tuned radar. It also provides a lighter, simpler and more cost-effective way of gaining the improvement over other methods of frequency agility.

THEORY

Dither tuning has been applied successful to both conventional and coaxial magnetrons. The mechanisms are very similar and the control characteristics are nearly identical. Figure 1 illustrates a *Dither* tuner.

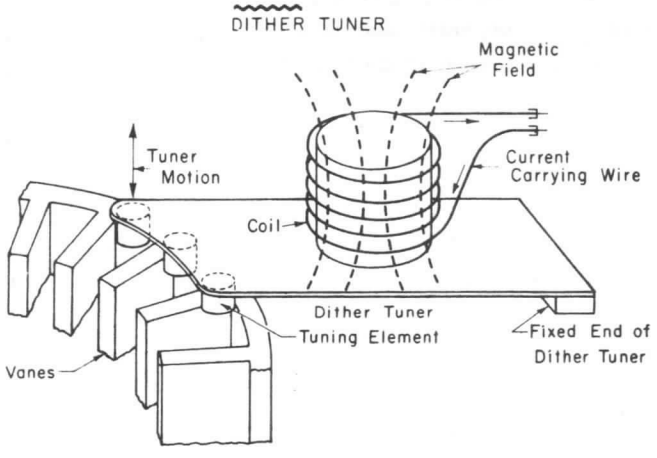

Note: All the Tuner is Inside the Vacuum Envelope.

CE-A2279

FIGURE 1

A tuning element is attached to the *Dither* tuner. A coil is attached to the tuner and a magnetic field is provided. Alternating current is applied to the coil. Motor action causes the tuner to be pushed back and forth in simple harmonic motion, causing a small variation in the frequency of the magnetron resonant system. The small changes in the magnetron resonant frequency result in a $\pm \Delta F$ frequency change in the output power from the magnetron. In the design of a *Dither* tuner it is of course desirable to maximize the ratio of the magnetron's ΔF to drive power supplied to the *Dither* tuner coil. This is typically accomplished by designing the mechanical resonance of the *Dither* tuner in relationship to the Radar System pulse repetition frequency so that the tuner is driven at its natural resonant frequency. The *Dither* tuner is contained entirely within the vacuum envelope of the tube and contributes only a few ounces to the tube weight. Note that frequency change is thus a plus and minus delta frequency (ΔF) about a quiescent point.

DRIVE CHARACTERISTICS

Since *Dither* tuners are usually operated near tuner resonance we may consider two plots of tuner performance. Figure 2 plots tuner drive current versus total peak-to-peak *Dither* frequency change (ΔF). Figure 3 shows how the peak-to-peak *Dither* frequency changes as audio frequency excitation is varied. Driving impedance of *Dither* tuners is low, typical designs are 0.2 to 0.3 ohms resistive. Note that the Delta Frequency obtained does not follow drive linearly but at first shows evidence of resonant build up, then tends to saturate. This property is both an advantage and a limitation depending on the nature of the application. Note also that a tendency to lower the apparent resonant frequency occurs as the drive is increased.

Usually best operation occurs above the resonant frequency. It is natural in resonant systems that the change in the build up is more rapid on one side of resonance than on the other. The rapid build up side is also subject to hysteresis; thus the Delta frequency may be double valued somewhat below the resonance where the curves fall off more rapidly depending on whether drive frequency was being raised or lowered.

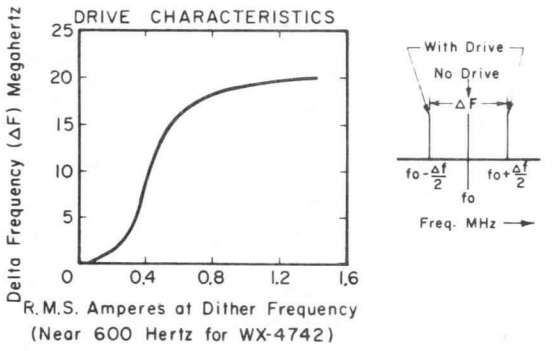

FIGURE 2

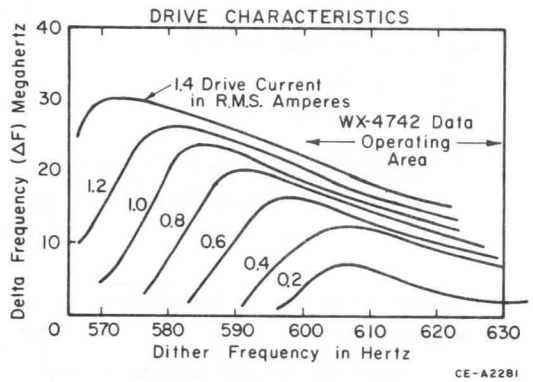

FIGURE 3

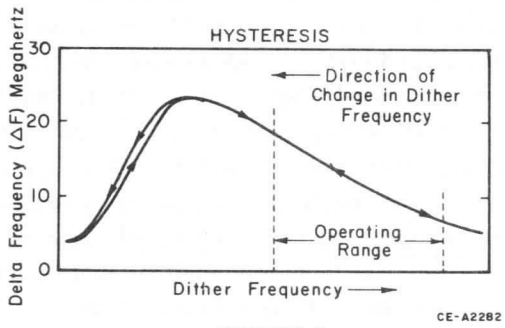

FIGURE 4

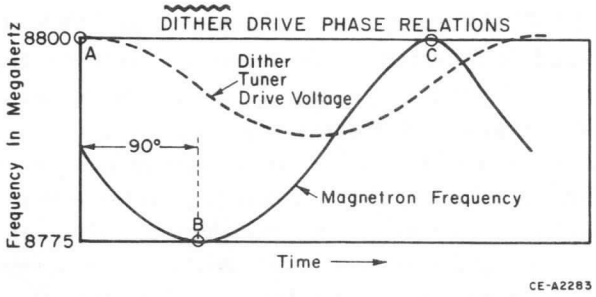

At A, drive is max, At B, Dither frequency is minimum (negative sense). Phase shift A to B is 90°. As Dither frequency is raised, shift A to B reduces. If the tube is pulsed at B and C, alternate pulses will be at 8775 MHz and 8800 MHz.

FIGURE 5

A possible hysteresis relation is shown in Figure 4. Fortunately, the upper, or slowly varying skirt does not exhibit measurable hysteresis. Thus the preferred drive frequency is above the resonant frequency.

TEMPERATURE COEFFICIENT

As the tube temperature rises the coefficient of elasticity of the *Dither* tuner decreases. This causes a typical decrease in the *Dither* tuner resonance of 0.02% per degree of centigrade. It is necessary to know what the expected range of tube operating temperatures will be to determine whether temperature compensation of the drive circuit oscillator will be needed. Each *Dither* tuner may be designed to have a different material hence it is necessary to consult the tube data sheet for the temperature coefficient peculiar to that tube.

PHASE OF DRIVE

In a resonant system the phase angle between the drive and response changes rapidly near resonance. As we have discussed previously it is desirable to drive the *Dither* tuner at a frequency near but not exactly at its natural frequency of resonance. It has also been established that changes in temperature and drive level affect the natural resonant frequency of the tuner. Thus the phase angle between the tuner drive voltage and the magnetron Δ frequency (i.e. tuner position) is a variable depending upon such factors as drive level, ambient temperature and choice of operating point. Due to manufacturing tolerances from tube to tube the system design must provide adjustment to accommodate reasonable variations in phase angle between drive voltage and magnetron Δ frequency. This accommodation can be simply made in various ways dependent upon the mode of operation of the Radar System.

Figure 5 shows the relationship between the drive voltage and the *Dither* tuner position or magnetron frequency. The case shown is where the tuner is at resonance and a 90° phase exists between frequency and drive voltage. In the recommended operating region (above resonance) this phase shift changes if it is desired to pulse at the maximum excursions. It is therefore recommended that up to 90° of phase shift between the drive circuit and system PRF be provided.

TYPES OF OPERATION

The availability of a *Dither* tuner in a magnetron provides considerable flexibility in the design of Radar Systems to increase range, reduce sea clutter, improve resolution, reduce scintillations, etc. The system designer will choose a mode of operation which best accomplishes his purpose. In all cases, however, the *Dither* tuner operates the same way; that is it moves in response to an applied drive signal and provides a Δ frequency change in proportion to its change in position. The way in which this Δ frequency change is utilized by the radar involves considerations of receiver tuning, receiver band width, pulse repetition frequency and phase of PRF with respect to tuner drive frequency. In general the *Dither* tuner must be designed for the specific Radar System desired by the System designer in order to achieve optimum performance. We have grouped possible system configurations into four types of operation described below.

TYPE I – Here the *Dither* mode provides alternate plus delta frequency and minus delta frequency operation. A picture obtained of a tube in TYPE I mode is shown in Figure 6. The effect is to have alternate

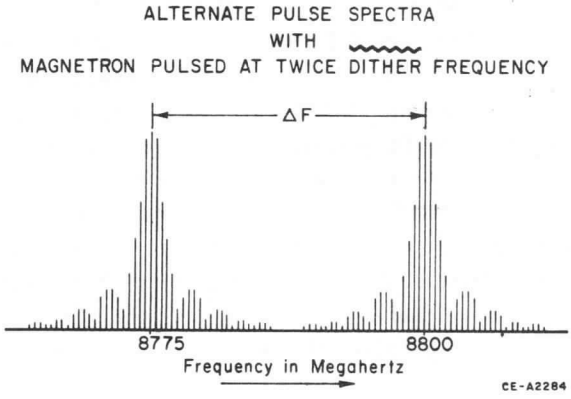

FIGURE 6

pulse operation at two distinct frequencies with negligible amplitude modulation or incidental FM. Operation is with pulse repetition frequency synchronized to twice *Dither* drive frequency. Lead information may be fed to assist the system AFC in maintaining receiver local oscillator lock on. *Dither* tuner resonance is designed below the selected drive frequency range by a few per cent.

TYPE II – The *Dither* tuner is designed to operate at a frequency that provides a maximum of frequency spread over the desired *Dither* band and a broad band receiver is used. Since the *Dither* tuner operates in simple harmonic motion, some bunching of the frequencies occurs at the ends of travel. This is illustrated in Figure 7. Here a tube is operated at a pulse repe-

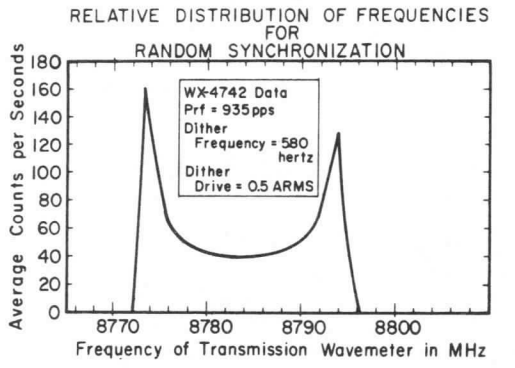

FIGURE 7

tition frequency of 985 pps. The *Dither* tuner is operated at a frequency of 580 hertz. The curve of Figure 7 was taken by sampling the RF output through a transmission wavemeter which is tuned to various frequencies in the operating band. The transmitted pulses are detected and counted with an electronic counter for a one second period. Since the wavemeter was narrow banded, not all pulses were counted at each frequency setting, only those that passed through with sufficient amplitude. The result is a statistical frequency diagram or histogram showing the distribution of pulses over the *Dither* band. In this application a lead voltage is unnecessary to track the transmitted frequency if the receiver band width is equal to the $\pm \Delta F$.

TYPE III – When the frequency spread of TYPE II is desired with narrow band receivers, accurate tuner positional information may be needed to assist the AFC tracking. A reactance modulator has been developed to enable the user to accurately predict magnetron frequency change. A coil is provided within the magnetron adjacent to the tuner element. This coil is resonated by a capacitor in the user's circuit to form a low frequency (400 kHz for example) tank circuit. This circuit shows the rising impedance characteristic of parallel resonance. A series resistor and an oscillator tuned to approximately the 3db point above reso-

nance are used. As the *Dither* tuner moves, the coil inductance and hence circuit frequency changes as shown in Figure 8. The signal seen across the resistor

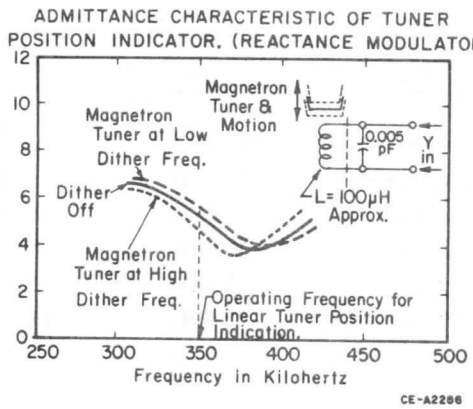

FIGURE 8

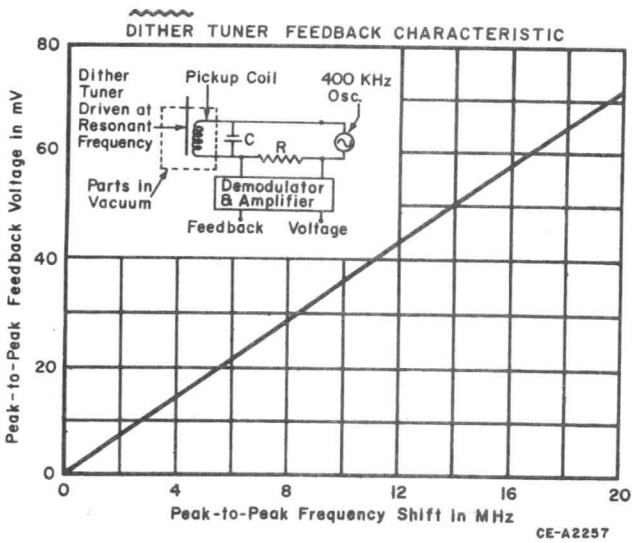

FIGURE 9

is a modulated envelope. This modulation is then a faithful measure of instantaneous magnetron frequency as determined by the *Dither* tuner. Thus a modulation peak corresponds to a low frequency peak and modulation valley corresponds to a high frequency. The demodulated envelope may then be amplified and fed to the local oscillator to help track the *Dither* tuned magnetron. A Plot of this feedback is shown in Figure 9.

TYPE IV – *Dither* tuners may be designed to operate at frequencies well below tuner resonance. In this case it is possible to obtain other than simple harmonic motion. Type IV operation requires greater drive currents and provides lower amplitudes of *Dither* range. (± ΔF). For example, at resonance, TYPE I operation might give 20 MHz at 1 ampere drive. The same tuner at 10% of resonant frequency cycles might give 5 MHz with 5 amperes drive.

ENVIRONMENTAL CHARACTERISTICS

The environmental characteristics of a *Dither* tuned magnetron should be carefully examined. *Dither* tuners will withstand 5 G vibration to 2000 hertz and 30 G, 11 milliseconds shocks. In operation, the vibration will excite the *Dither* tuner in the same manner that the normal drive excites it. Since *Dither* tuners are designed for high audio (600 Hz) frequencies, most applications do not have high G ambient vibration levels at this frequency. The frequency that is to be avoided is only the *Dither* frequency itself, and vibration isolator design is facilitated at these frequencies. It is also possible, by use of a feedback arrangement, to drive the *Dither* tuner in a manner to reduce incidental FM from vibration excitation of the tuner. A locking device may be added to avoid auto-excitation of *Dither* during non-*Dither* modes of system operation. In summary, care in the mount and choice of *Dither* for the application has made application to many difficult enviroments possible. See Figure 10 for environmental performance.

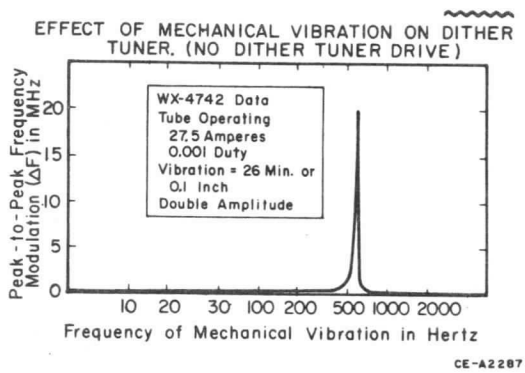

FIGURE 10

STATUS OF DITHER TUNING

Many successful applications of *Dither* tuning have been made. Some of the *Dither* tuned tubes are listed below.

Type	Power	Frequency	Dither Frequency	Dither Range	Status
WX-4742	200 kW	8.5–9.6 GHz	600 hertz	15 MHz	Production
WX-30340	300 kW	9.05–10.0 GHz	1000 hertz	25 MHz	Prototype
WX-31028 #	70 kW	16.5 GHz (fixed)	400 hertz	20 MHz	Prototype
WX-31128* #	70 kW	16.5 GHz (fixed)	200 hertz	20 MHz	Prototype
WX-30366* #	35 kW	16–17 GHz	200 hertz	25 MHz	Development

* has tuner position feedback.

coax type magnetron.

Westinghouse®

WL-103
WL-142
WL-143

August 15, 1964

RUGGEDIZED, TUNABLE X-BAND PULSED MAGNETRONS

WL-103. . . . . 9.31 TO 9.34 GC.
WL-142. . . . . 9.34 TO 9.37 GC.
WL-143. . . . . 9.37 TO 9.40 GC.

Integral Magnet — 150 Watts Peak Power Output — Air Cooled

The WL-103, WL-142 and WL-143 are tunable X-band magnetrons operable either at 0.005 duty or at 0.027 duty with a 0.5 microsecond pulse width and a minimum average output power of 0.6 watts or 3.24 watts respectively.

The anode of these tubes is a vane structure of low expansion material with one cavity coupled to a waveguide type output section. A single strapped system on each end of the vane structure serves to complete the circuit. The emitter is an oxide type cathode. Permanent magnets are affixed to the evacuated tube envelope to provide a field necessary for magnetron operation. The rotation of a slotted shaft will cause the output tuner to select the desired frequency within the tuning range.

These tubes are designed to operate into WR-90 waveguide through a transition section.

The WL-103, WL-142 and WL-143 are designed for beacon, transponder, and other repeater service where high-duty low-power pulses are required. They have excellent frequency stability and can withstand severe environmental conditions. Other frequency versions of them are available on request.

ELECTRICAL

Heater, for Unipotential Cathode:		
Voltage (ac)	6.3	Volts
Current at 6.3 Volts	Min.: .43 Max.: .53	Amperes
Starting Current	Maximum instantaneous starting current must never exceed 1.5 amperes.	
Minimum Cathode Heating Time	30	Seconds
Maximum Frequency Pulling at VSWR of 1.3	20	Megacycles
Frequency	9.31 – 9.34	Gigacycles WL-103
	9.34 – 9.37	Gigacycles WL-142
	9.37 – 9.40	Gigacycles WL-143

MECHANICAL

Mounting Position	Any
Waveguide Output Flange	Tube shall be operated with a transition section which mates to WR90 waveguide.
Cathode Connector	The cathode connector such as the Jettron No. 9050 manufactured by Jettron Products, Hanover, New Jersey should be used.
Tuner	Slotted Shaft
Lubrication	See Note 1
Vibration (Note 2)	10g, 20-500 cycles
Net Weight (Approx.)	16 Ounces
Shipping Weight	3 Pounds

PULSED OSCILLATOR SERVICE

MAXIMUM AND MINIMUM RATINGS	Min.	Max.	
Peak Anode Current	–	650	mA
Peak Power Input	–	500	Watts
Duty	–	0.03	–
Anode Block Temperature	–55	150	°C
Load Voltage Standing Wave Ratio	–	1.3	–
Pulse Duration	0.4	1.2	μSec.
Altitude	–	70,000	Feet

TYPICAL OPERATION WITH LOAD VSWR ≦ 1.05

OSCILLATION 1 WITH DUTY CYCLE OF 0.005

	Min.	Typ.	Max.	
Heater Voltage	5.5	6.0	7.0	Volts
Peak Anode Voltage	775	825	850	Volts
Peak Anode Current	–	0.55	–	Amperes
Pulse Repetition Rate	–	10,000	–	CPS
Pulse Duration	–	0.5	–	μSeconds
RF Bandwidth with Worst Phasing of 1.3 VSWR	–	2.0	5.0	Megacycles
Side Lobes	8	12	–	dB
Pulling Figure at VSWR of 1.3	–	12	20	Megacycles
Pushing Figure (.5 to .6A)	–	–	2	Megacycles
Thermal Drift (Note 3)	–	–	2	Megacycles
Thermal Drift Time	–	3	–	Minutes
Stability (Missing Pulses) with worst phasing of 1.3 VSWR (Note 4)	–	0.02	1.0	Per cent
Peak Power Output	120	150	–	Watts

OSCILLATION 2 WITH DUTY CYCLE OF 0.027

Heater Voltage	5.0	5.5	6.0	Volts
Peak Anode Voltage	775	825	850	Volts
Peak Anode Current	–	0.55	–	Amperes
Pulse Repetition Rate	–	54000	–	CPS
Pulse Duration	–	0.5	–	μSecond
Peak Power Output	120	150	–	Watts

LIFE TEST (9325 Mc. for WL-103)

Life Test Cycle	1200	Cycles
Filament Warm-up	30	Seconds
Oscillation 1	7.5	Minutes
Non-operational	7	Minutes

NOTES

1. These tubes are factory lubricated and should not require further lubrication. Care should be exercised to keep foreign particles out of the exposed portions of the tuner mechanism.
2. Special vibration problems encountered with them should be referred to the Microwave Engineering Dept. Westinghouse Electric Corporation, Elmira, New York. They have been operationally tested at vibration levels up to 10 g's with vibration frequencies from 20 to 500 cycles per second.
3. Thermal Drift is the change in frequency from the start of oscillation until thermal equilibrium has been reached.
4. A pulse is considered missing if its energy content is less than 70% of a normal pulse.

OPERATING RECOMMENDATIONS

MAXIMUM RATINGS

The maximum ratings given in the data must not be exceeded if the listed performance characteristics are to be realized. The equipment manufacturer must take due precaution to insure that these limits are not exceeded by equipment tolerances or by possible supply voltage variations.

HIGH VOLTAGE PRECAUTIONS

The high voltage at which these tubes operate is dangerous to life. Care should be taken to prevent contact of personnel with the high voltage terminals of the tube. The usual method of protecting the personnel is to fasten the tube mounting plate to a grounded metal container large enough to allow insulating space around the cathode bushing. Connections are made to the cathode terminals inside this container. The magnetron anode is also grounded to the container. It is necessary that a low impedance connection exists between the equipment and the mounting plate and anode for proper operation and satisfactory performance.

MAGNETIC IC FIELD PRECAUTIONS

The WL-103, WL-142 and WL-143 are supplied with integral magnets which are factory adjusted to provide proper operation. It is important, therefore, that no magnets or magnetic materials be brought within 2 inches of the tube to prevent demagnetization of the tube magnets.

HANDLING PRECAUTIONS

The tubes should be protected against shock when they are handled. A polyethylene bag is placed over the tube to prevent dust and other particles from collecting. This must be removed for operation.

MOUNTING DIRECTIONS

The tubes should be mounted with two 10-32 non-magnetic screws. The surface should be flat and provide adequate clearance for the cathode. The waveguide output is designed to operate with a transition section between the tube and WR90 waveguide. An air gap of 0.030 to 0.090 should be maintained between the tube and the transition.

EQUIPMENT

For best operation of these tubes, it is important that the voltage and current pulses be carefully shaped. The voltage rise times indicated in the data must be rigorously adhered to. The current and voltage pulses appear in time phase in Figure 1. The pulse width is

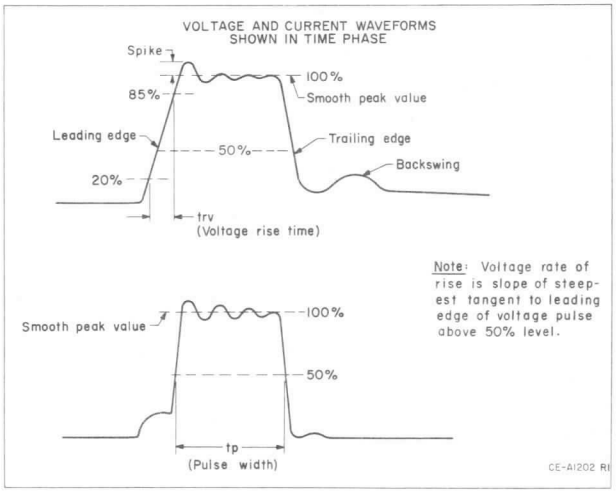

FIGURE 1

determined by the width of the current pulse at the 50% amplitude level. Measurement of pulse width using the r-f envelope is not recommended. The ripple on the top of the current pulse should have a peak to peak amplitude less than 10 percent of the smooth peak value. A sloping pulse is also objectionable. The trailing edge is more important on shorter pulse widths and will contribute to poor spectra if excessive. Voltage spike should not exceed 10%. The backswing should be maintained at a level low enough to prevent the tube from breaking back into oscillation again. This could result in increased system noise. The proper measurement of the voltage and current pulses is very important. It is not sufficient to measure the voltage pulse alone since a magnetron tends to be a constant voltage device and will appear to smooth out an otherwise poor pulse.

They should be operated with a well matched load. Tube life and reliability will be increased if the line is well matched. As shown in the data, a maximum VSWR of 1.3 is permitted. Under these conditions a life of 150 anode hours minimum may be expected. Typical life is considerably longer. Changes in the operation of the tubes occur under operation with a mismatch. The operating region of highest power is called the "sink" and represents the highest coupling to the magnetron. Under these conditions the r-f spectrum will tend to broaden and side lobes will tend to grow. Instability in the form of missing pulses may also occur. This results because the magnetron has been loaded.

A second problem encountered with tunable magnetrons involves the distance between the mismatch and the tube flange. This is known as the "long lines" effect and is an additional limit on the VSWR that is permitted in the load as shown in Figure 2. If the load presents a high VSWR at a sufficient distance from the tube, discontinuities in the magnetron tuning characteristic may result. This can be avoided by using a short system or by keeping the VSWR low.

PERFORMANCE .

Typical performance chart for the WL-103 is shown in Figure 3. The volt-ampere characteristics of the tube are shown with power output indicated with circles. The curves vary depending on the condition of the load and the tube frequency.

PUSHING

Typical pushing characteristics are shown in Figure 4.

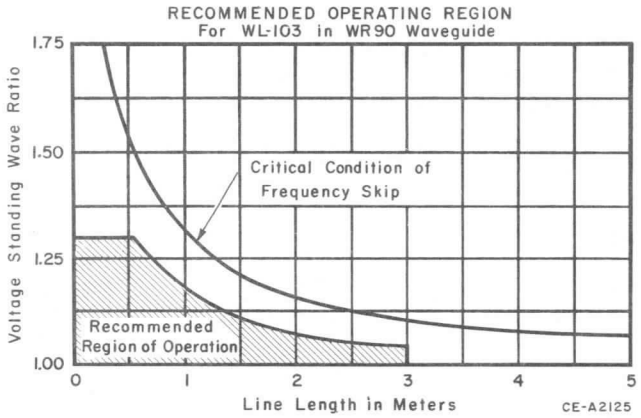

FIGURE 2

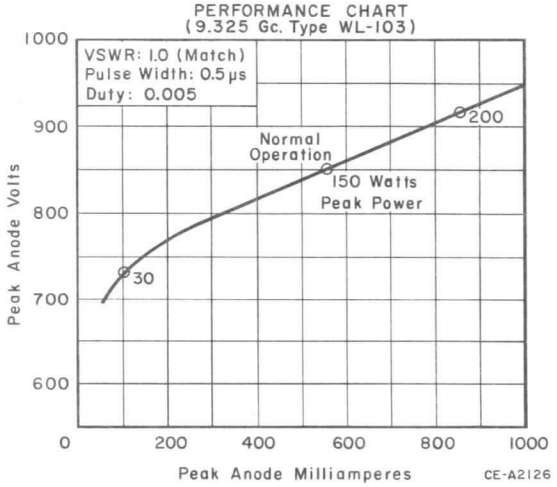

FIGURE 3

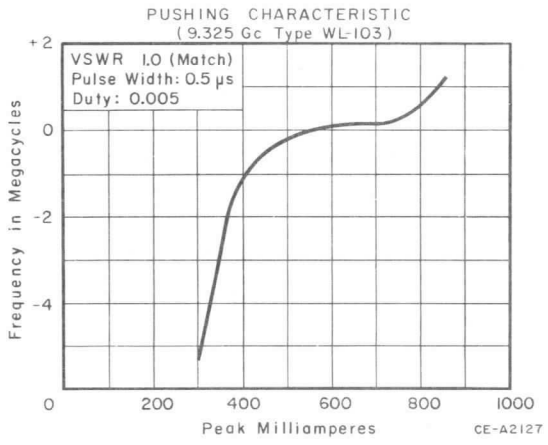

FIGURE 4

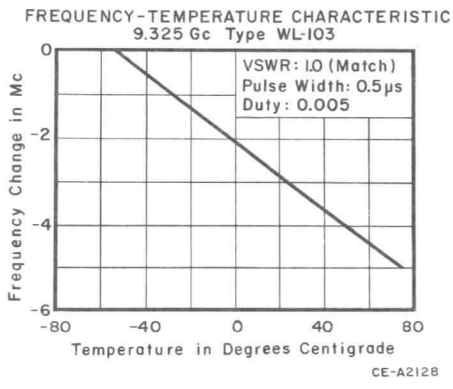

FIGURE 5

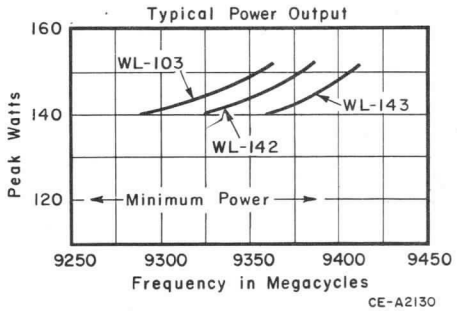

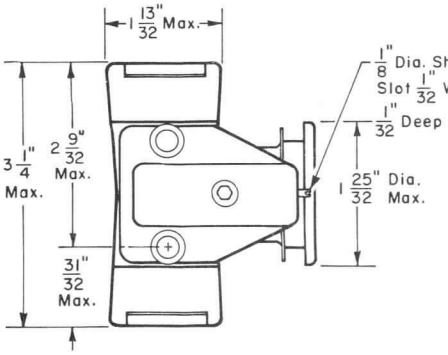

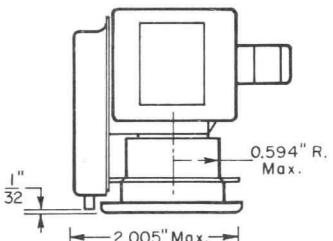

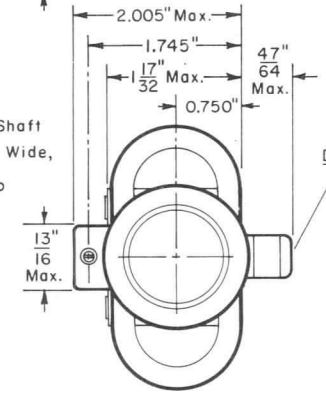

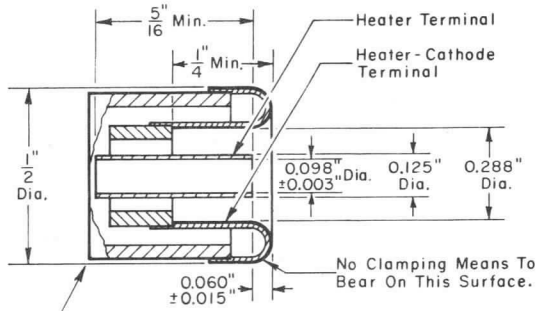

SEE DETAIL

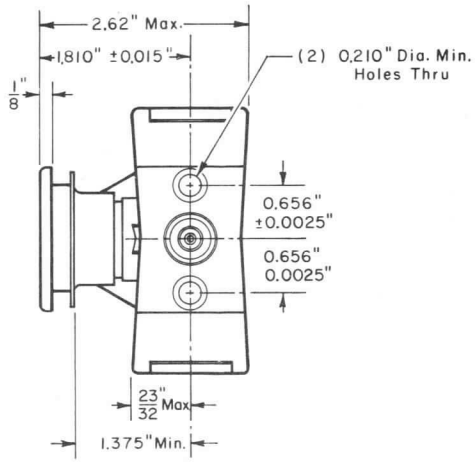

CE-B2131

RIEKE DIAGRAM FOR WL-103

Pulse Duration: 0.5μ Sec.
Duty: 0.005
Frequency: 9325 Mc.

Peak Power Output ——
Frequency Deviation - - -

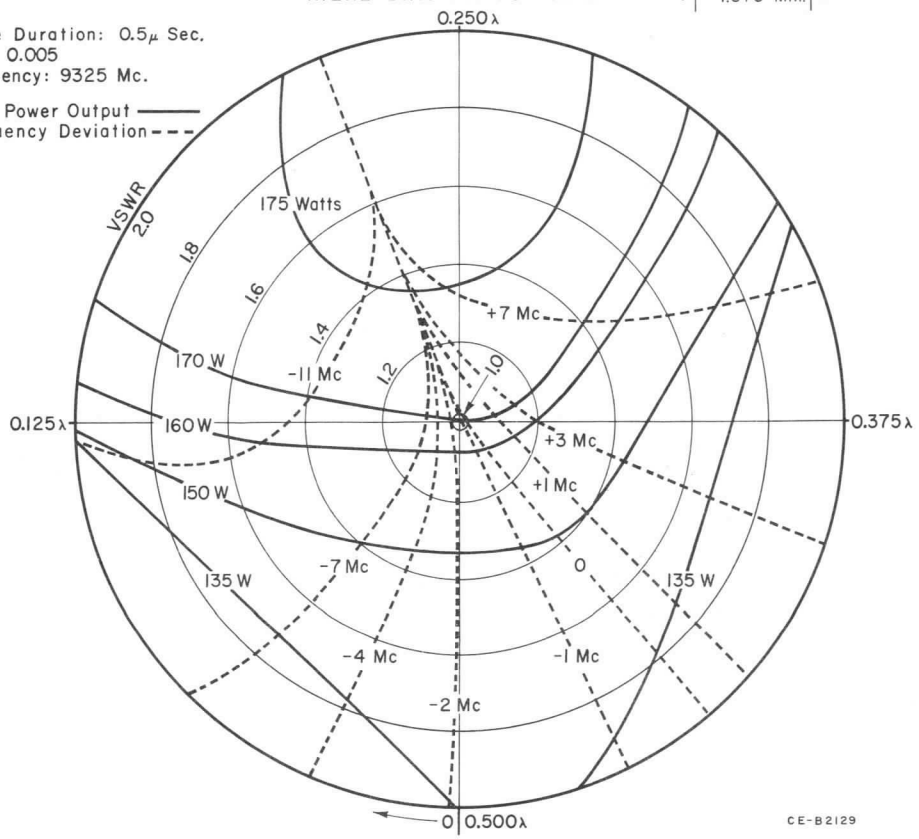

CE-B2129

The information contained herein is supplied without assuming responsibility for infringement of patents or other rights of third parties which may result from its use. No license is granted by implication or otherwise under any patent or patent rights of Westinghouse Electric Corporation.

March 15, 1962

MAGNETRON TYPE WL-193

Tunable 8550 to 9630 Mc.
Forced Air Cooled
Low Pushing Factor

250 KW Peak Power Output
Integral Magnet
No Cathode Memory

The WL-193 is a tunable X-band magnetron designed for service as a pulsed oscillator at frequencies between 8550 and 9630 megacycles per second. Its tuner design is particularly suitable for applications requiring rapid tuning over its operating range.

The WL-193 has a typical power output of approximately 250 kilowatts over its entire frequency range. Pulse widths up to 3.3 microseconds may be used. Thermal drift is typically 20 megacycles, even at the extremes of the frequency range. The WL-193 provides good spectrum shape and excellent stability of operation. The WL-193 has a low pushing factor which provides improved frequency stability.

Structurally, the WL-193 employs a modified hole and slot anode with a double strapped system. An inductive pin tuner of proven reliability provides the tuning action. In order to ensure a low arcing rate and long life, a thorium cermet cathode is used. This cathode exhibits very low gas evolution and contains an inhibitor to reduce anode contamination. This feature eliminates cathode memory, a detrimental characteristic common to many magnetrons. The WL-193 is rugged and has been operationally tested at vibrational levels up to 5 g's and at vibrational frequencies up to 1500 cycles per second. The WL-193 has a waveguide type output which is designed to couple to a modified UG-52A/U choke flange. The output may be pressurized, although no breakdown will occur if pressure is maintained at 1 atmosphere.

The WL-193 tuner is designed for high speed motor drives. The tuning shaft may be driven at speeds up to 1500 revolutions per minutes allowing excursion of the frequency range in approximately 7 seconds. A calibrated dial and geneva provides a visual indication of tube frequency.

GENERAL DATA

ELECTRICAL:

Heater, for Unipotential Cathode:	
Voltage (ac)	9.0 V
Current at 9.0 V	Minimum 12.8 A Max. 15.6 A
Starting Current	Maximum instantaneous starting current must never exceed 2.5 times 15.6A or 39 amperes.
Minimum Cathode Heating Time	180 sec.
Frequency	8550-9630 mc.
Maximum Frequency Pulling at VSWR of 1.5	15 mc.

MECHANICAL:

Mounting Position	Any
Dimensions	See Outline Drawing
Air Flow:	
To fins	An air stream should be directed along the cooling fins toward the body of the tube. Adequate flow should be provided so that the temperature of the anode block does not exceed 125° C.
Cathode Bushing	Oil Immersed
Waveguide Output Flange	Mates with Modified JAN UG-52/U
Tuner (Note 1)	Calibrated, with shaft for motor drive
Tuning Torque:	
Tube	15 in. oz. max.
Equipment	6 lbs. max.
Shaft Speed	1500 r.p.m. max.
Tuner Backlash (at 9150 mc) (Note 2)	10 megacycles max.
Lubrication (Note 3)	. . . . .
Pressurization of Output	15 psia (min.) 45 psia (max.)
Vibration (Note 4)	
Weight (Approx.)	16 pounds 4 ounces

PULSED OSCILLATOR SERVICE

MAXIMUM AND MINIMUM RATINGS:

	Min.	Max.	
Peak Anode Current		32	amp.
Peak Power Input		1000	KW
Duty		.0013	
Pulse Duration (Note 5)		3.3	μs
Rate of Rise of Voltage Pulse	90	180	kv/μsec
Anode Block Temperature		125	°C
Cathode Bushing Temperature		270	°C
Load Voltage Standing Wave Ratio		1.5	
Input Pulse Circuitry	A discharging network type pulser or other type which limits the fault power which could be applied to the magnetron to twice the normal pulse power must be used.		

TYPICAL OPERATION

Load VSWR ≤ 1.05 Except as Noted

OSCILLATION (1) WITH DUTY CYCLE OF 0.0004

	Min.	Typical	Max.	
Heater Voltage (Note 6)	--	8.0	--	Volts
Peak Anode Voltage (Note 7)	27.0	28.0	29.0	Kilovolts
Peak Anode Current	--	25.0	--	Amperes
Pulse Repetition Rate	--	1600	--	CPS
Pulse Duration	--	0.25	--	μsecond
RF Bandwidth with Worst Phasing of 1.5 VSWR (20 to 28 Amperes)	--	4	8	Mc.
Stability (Missing Pulses, Note 8) with Worst Phasing of 1.5 VSWR (20 to 28 Amperes)	--	0.01	0.2	%
Frequency	8600	--	9600	Mc.

OSCILLATION (2) WITH DUTY CYCLE OF 0.0008

	Min.	Typical	Max.	
Heater Voltage (Note 6)	--	6.0	--	Volts
Peak Anode Voltage (Note 7)	27.0	28.0	29.0	Kilovolts
Peak Anode Current	--	25.0	--	Amperes
Pulse Repetition Rate	--	800	--	CPS
Pulse Duration	--	1.0	--	μsecond
RF Bandwidth with Worst Phasing of 1.5 VSWR (20 to 28 Amperes)	--	1.1	2	Mc.
Side Lobes (1.5 VSWR) (20 to 28 Amperes)	8	10	--	--
Pulling Figure at VSWR = 1.5	--	8	15	Mc.
Thermal Factor for any 25°C Range Between 75 and 125°C	--	--	0.35	Mc/°C
Thermal Drift (Note 9)	--	20	35	Mc.
Thermal Drift Time	--	8	15	Minutes
Stability (Missing Pulses, Note 8) with Worst Phasing of 1.5 VSWR (20 to 28 Amperes)	--	0.05	0.2	%
Pushing Figure:				
At 24 to 28 Amperes	--	0.16	0.32	Mc./Amp.
At 28 to 32 Amperes	--	0.16	0.32	Mc./Amp.
Frequency Modulation (Note 10)	--	--	500	Kc.
Peak Power Output	200	250	--	Kw.
Frequency	8600	--	9600	Mc.

OSCILLATION (3) WITH DUTY CYCLE OF 0.00075

	Min.	Typical	Max.	
Heater Voltage (Note 6)	--	7.0	--	Volts
Peak Anode Voltage (Note 7)	27.0	28.0	29.0	Kilovolts
Peak Anode Current	--	25.0	--	Amperes
Pulse Repetition Rate	--	300	--	CPS
Pulse Duration	--	2.5	--	μsecond
RF Bandwidth with Worst Phasing of 1.5 VSWR (24 to 30 Amperes)	--	0.5	1.5	Mc.
Stability (Missing Pulses, Note 8) with Worst Phasing of 1.5 VSWR (30 Amperes)	--	0.05	0.2	%
Frequency	--	9375	--	Mc.

LIFE TEST

LIFE TEST CYCLE (Note 11)

Filament Warm-up	3	Minutes
Oscillation (1)	6	Minutes
Oscillation (2)	20	Minutes
Non-Operational	9	Minutes
Number of Cycles	1667	Cycles

LIFE TEST FAILURE CRITERIA (OSCILLATION 2 CONDITIONS)

Power	160	min.	Kilowatts
Bandwidth	2.5	max.	Megacycles
Stability (Missing Pulses)	0.3	max.	%
Frequency Modulation	1.0	max.	Megacycles

NOTES

1. Connection to the shaft should be through a flexible coupling. Any connection to the shaft that tends to introduce an axial or radial thrust may reduce the useable life of the tuner.
2. Backlash is defined as the difference in frequency when a given dial setting is approached in either direction of rotation.
3. The WL-193 is factory lubricated and should not require further lubrication. Care should be exercised to keep foreign particles out of the exposed portions of the tuner mechanism. Should further lubrication be desired, Dow Corning Silicone No. 33 Grease should be used on the worm and "Lockease" Colloidal Graphite oil on the shaft bearings.
4. Special vibration problems encountered with the WL-193 should be referred to the Microwave Engineering Dept. WEC, Elmira, New York. The WL-193 has been operationally tested at vibration levels up to 5 g's with vibration frequencies up to 1500 cycles per second.
5. Longer pulse widths are permissible depending upon operating requirements.
6. Heater voltage should be as listed ± 10% for maximum life.
7. This represents the range of production at 9000 mc. See curves for other frequencies.
8. A pulse is considered missing if its amplitude is less than 70% of a normal pulse.
9. Thermal Drift is the change in frequency from the start of oscillation at 9600 Mc. until thermal equilibrium has been reached.
10. Frequency modulation is the maximum peak-to-peak deviation during the middle 1/2 microsecond of the pulse.
11. Frequency is varied during life test in 100 Mc steps every 8 hours from 8600 to 9600 Mc. The waveguide load is set at a VSWR of 1.5 (min.) and varied continuously through all phases every 15 minutes.

OPERATING RECOMMENDATIONS

MAXIMUM RATINGS:

The maximum ratings given in the data must not be exceeded if the listed performance characteristics are to be realized. The equipment manufacturer must take due precaution to insure that these limits are not exceeded by equipment tolerances or by possible supply voltage variations.

HIGH VOLTAGE PRECAUTIONS:

The high voltage at which the WL-193 operates is dangerous to life. Care should be taken to prevent contact of personnel with the high voltage terminals of the tube. The usual method of protecting the personnel is to fasten the tube mounting plate to a grounded metal container large enough to allow insulating space around the cathode bushing. Connections are made to the cathode terminals inside this container and the space around the terminals is filled with an insulating fluid. The magnetron anode is also grounded to the container. It is necessary that a low impedance connection exists between the equipment and the mounting plate and anode for proper operation and satisfactory performance.

MAGNETIC FIELD PRECAUTIONS:

The WL-193 is supplied with integral magnets which are factory adjusted to provide proper operation. It is important, therefore, that no magnets or magnetic materials be brought within 4 inches of the tube to prevent demagnetization of the tube magnets.

HANDLING PRECAUTIONS:

The WL-193 should be protected against shock when it is handled. The tube is normally supplied with a guard, to protect the cathode bushing, which is removed when the tube is installed. A polyethylene bag is placed over the tuner to prevent dust and other particles from collecting in the gear mechanism. This too must be removed for operation. A dust cover is also provided to keep particles out of the waveguide system as the entrance of particles into the output section will cause arcing and could result in tube destruction.

MOUNTING DIRECTIONS:

The WL-193 should be mounted with its weight supported by its mounting flange. The surface should be flat and provide adequate clearance for the cathode. The waveguide output is designed to mate with a modified JAN UG-52A/U flange. The UG-52A/U flange is modified by enlarging the threaded holes to allow entry of 8-32 screws. It is preferable that the waveguide include a flexible section where it is joined to the tube to prevent distortion of the tube output. Before connecting the output to the waveguide, the user should check the window to insure its freedom from dust which could cause arcing.

COOLING:

An air blast should be provided across the fins. This air should be directed to the fins by an appropriate flexible boot for best cooling efficiency. An air flow of 35 CFM at a pressure of 2.0 inches of water should be adequate to maintain the anode temperature below the maximum of 125°C rating. Anode temperature should be measured by contacting the output sleeve 1.5 inches from the face of the waveguide flange. Care should be taken to insure positive contact with the thermocouple. It is usually necessary to scrape a small bit of paint from the magnetron for this measurement.

STARTING:

When starting a tube for the first time, a heater voltage of 9.0 volts should be applied for 3 minutes. Care must be taken to limit the starting surge surge current to 39 amperes max. Normal heater current at this voltage is between 12.8 and 15.6 amperes. This will allow the cathode to reach operating temperature and the getter to become operative. Pulse power in the form of negative pulses may then be applied to the cathode. If instability due to arcing occurs, it may be necessary to season the tube at the full 9.0 volts on the heater and to operate at reduced power for 10 minutes. Normally the heater should be reduced to the specified voltage immediately after application of full rated operating voltages. When operating conditions are reached, back bombardment of the cathode occurs which tends to raise the cathode temperature, necessitating the reduction in heater voltage. The heater should be protected from the pulse power by placing a suitable capacitor across the heater terminals. The cathode terminal may be identified by the red marking on the lug. It is important to attach the anode circuit return to this terminal to prevent heater burn-out.

TYPICAL FREQUENCY DRIFT CHARACTERISTICS
FROM COLD START

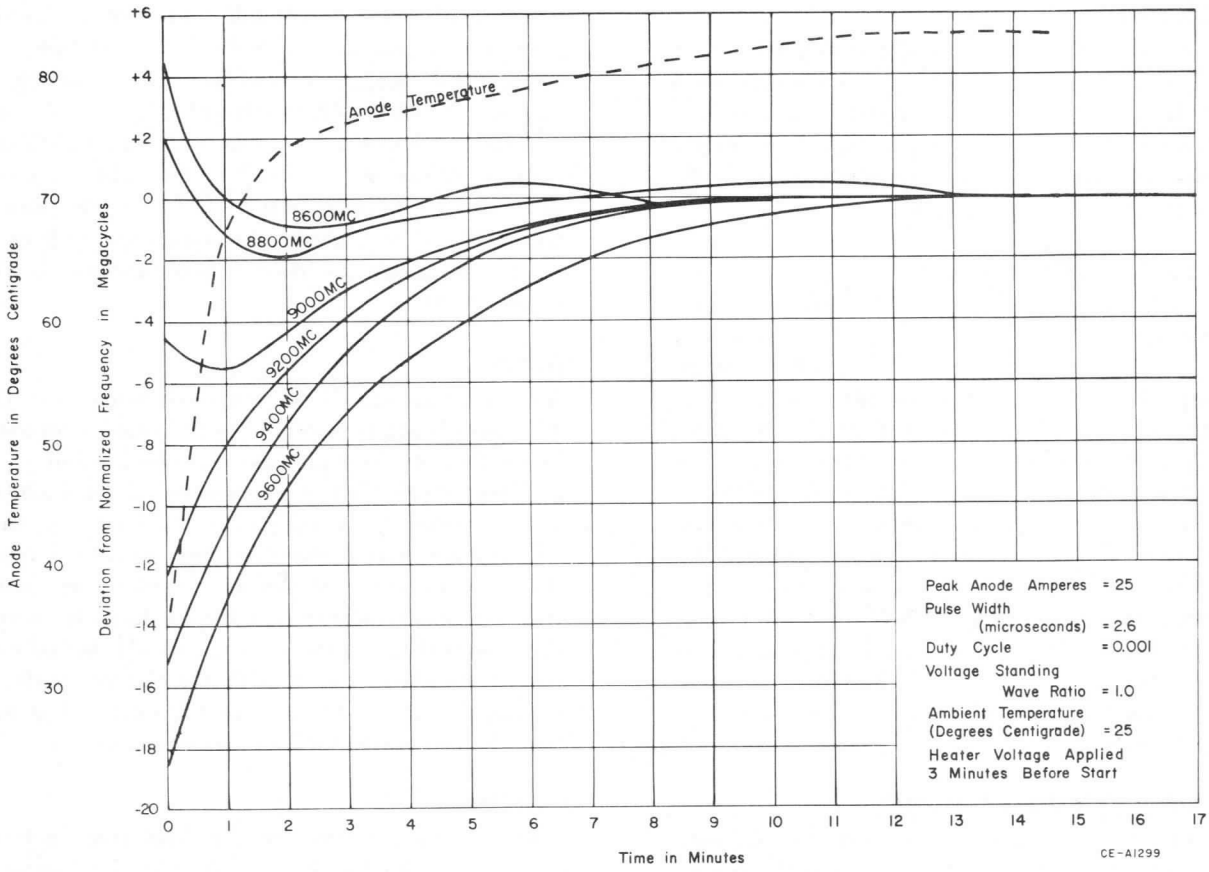

THERMAL STABILIZATION:

As the anode block warms up, the cavities increase in size, causing a drop in frequency. At higher frequencies with the crown-of-thorns tuner inserted into the cavities, the pins heat up. This causes an expansion of the tuner which raises frequency. This is the dominant effect. The WL-193 is designed to reach equilibrium as quickly as possible consistent with these opposing phenomena. The time required for stabilization is shown in CE-A 1299.

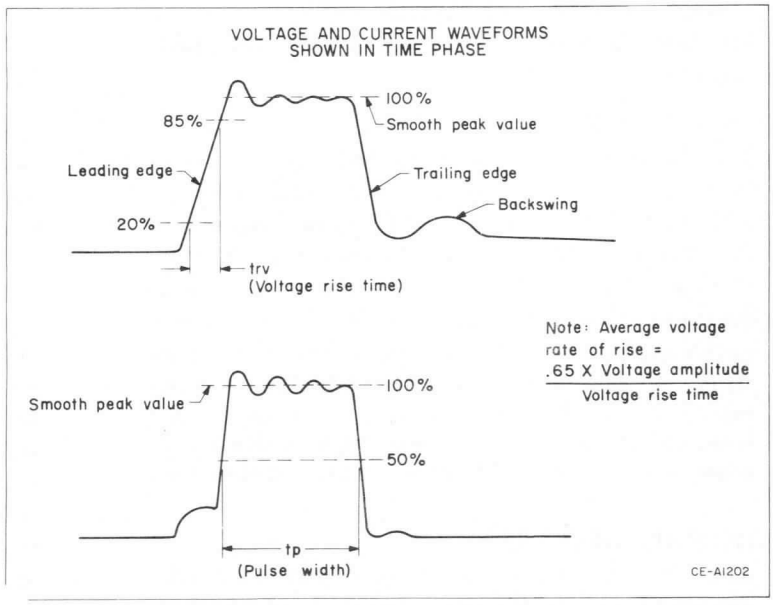

EQUIPMENT:

For best operation of the WL-193, it is important that the voltage and current pulses be

carefully shaped. The voltage rise times indicated in the data must be rigorously adhered to. The current and voltage pulses appear in time phase in CE-A1202. The pulse width is determined by the width of the current pulse at the 50% amplitude level. Measurement of pulse width using the r-f envelope is not recommended. The ripple on the top of the current pulse should have a peak to peak amplitude less than 10 percent of the smooth peak value. A sloping pulse is also objectionable. Either of these conditions will result in poor spectra especially under 2.5 microsecond operation. The trailing edge is of less importance but it can contribute to poor spectra if excessive. The backswing should be maintained at a level low enough to prevent the tube from breaking back into oscillation again. This could result in increased system noise. The proper measurement of the voltage and current pulses is very important. It is not sufficient to measure the voltage pulse alone since a magnetron tends to be a constant voltage device and will appear to smooth out an otherwise poor pulse. A modulator is shown schematically in CE-A 1203 with location of voltage and current viewers indicated. A suitable voltage viewer is a capacitor divider having a shunt capacity of about 6 micromicrofarads shielded as shown in CE-A 1301.

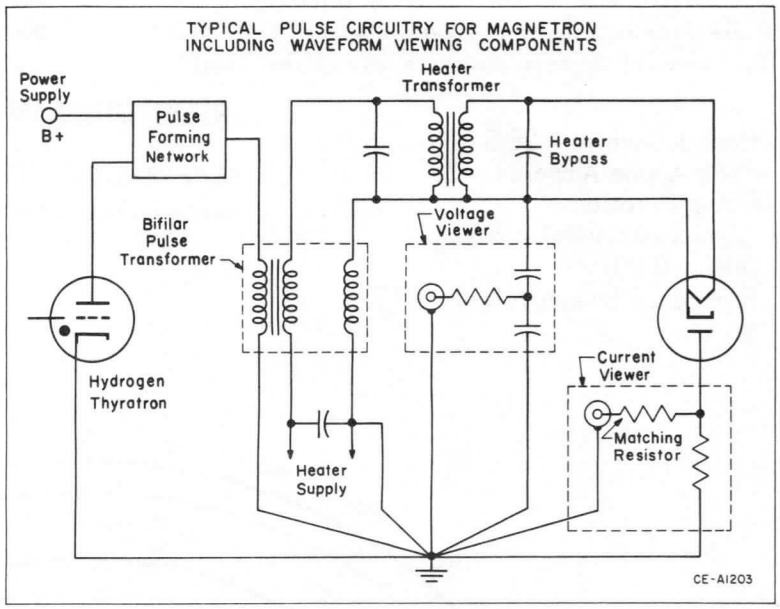

For current viewing, a resistor with a value of about 2.5 ohms should be used. It should consist of a number of carbon resistors mounted radially as shown in CE-A 1302. Best results are obtained if these pulses are fed directly to the deflection plates of an oscilloscope.

The WL-193 should be operated with a well matched load. Tube life and reliability will be increased if the line is well matched. As shown in the data, a maximum VSWR of 1.5 is permitted. Under these conditions a life of 700 anode hours minimum may be expected. Typical life is considerably longer. Operation of the WL-193 under

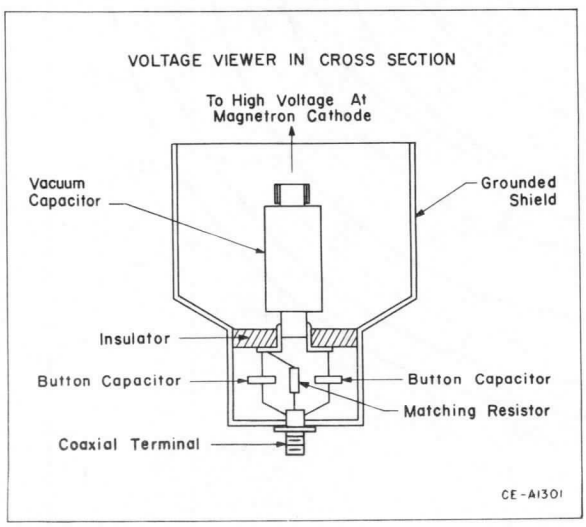

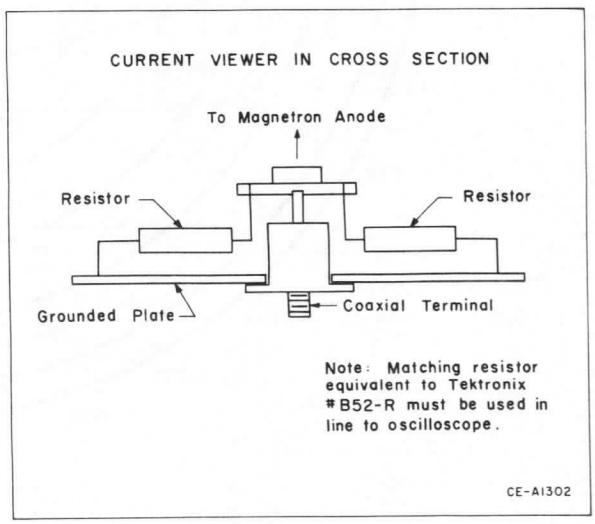

a mismatch can be best seen by referring to the Rieke diagrams shown in CE-B 1303 and CE-B 1304. The area of highest power is called the "sink" and represents the highest coupling to the magnetron. Under these conditions the r-f spectrum will tend to broaden. This is especially true at 2.5

RIEKE DIAGRAM

Peak Kilovolts = 28.5
Peak Anode Amperes = 25
Pulse Duration
(microseconds) = 2.6
Duty = 0.001
Frequency (megacycles) = 8750

REFERENCE POINT:
MAGNETRON FLANGE

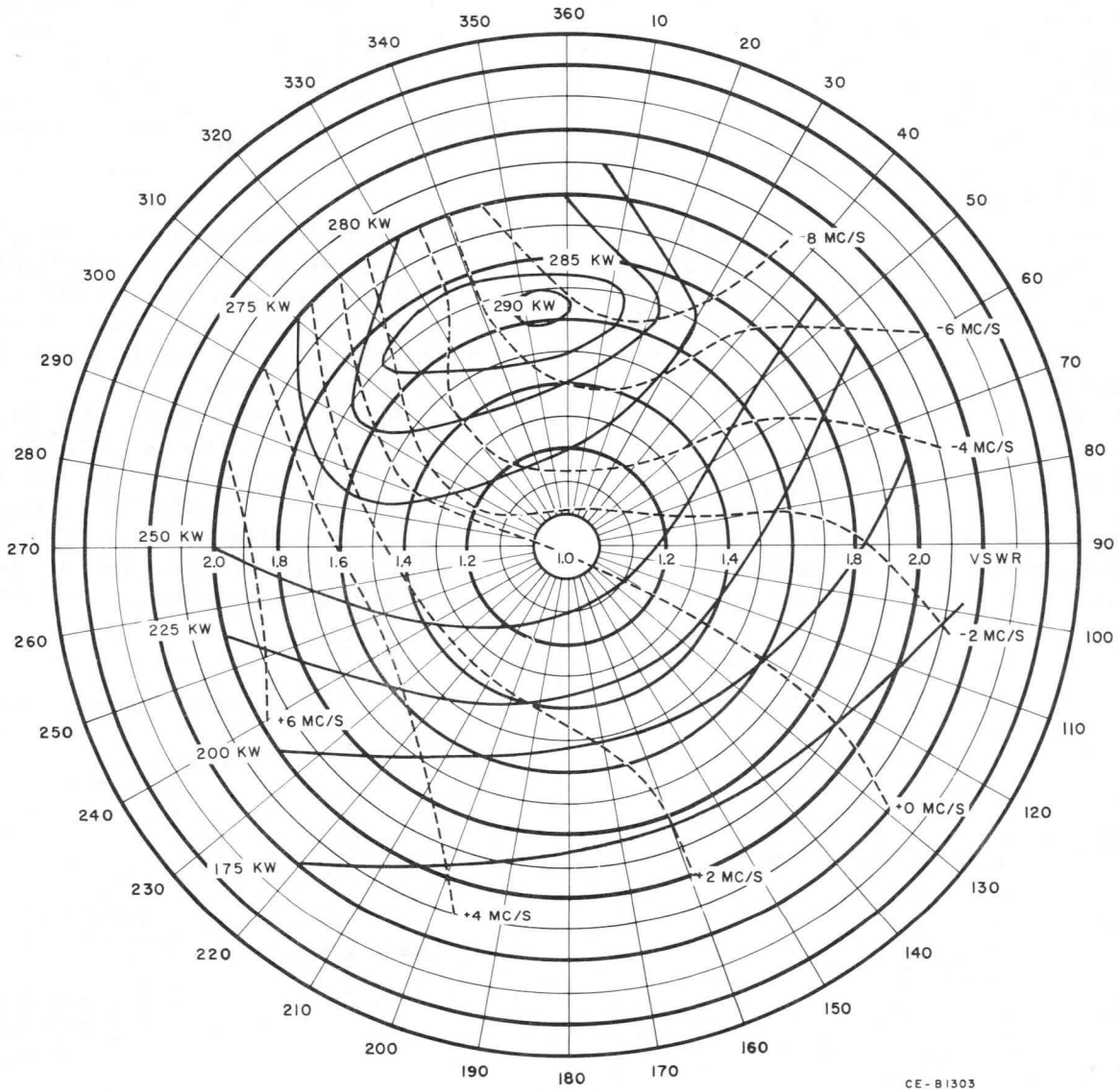

microsecond operation. When the phase of the VSWR is changed to move the operation into the low power region (anti sink) the magnetron may tend to show signs of instability. This may take the form of arcing and an increase in missing pulses. This results because the magnetron has been un-

RIEKE DIAGRAM

Peak Kilovolts = 29.7
Peak Anode Amperes = 25
Pulse Duration
(microseconds) = 2.6
Duty = 0.001
Frequency (megacycles) = 9375

REFERENCE POINT:
MAGNETRON FLANGE

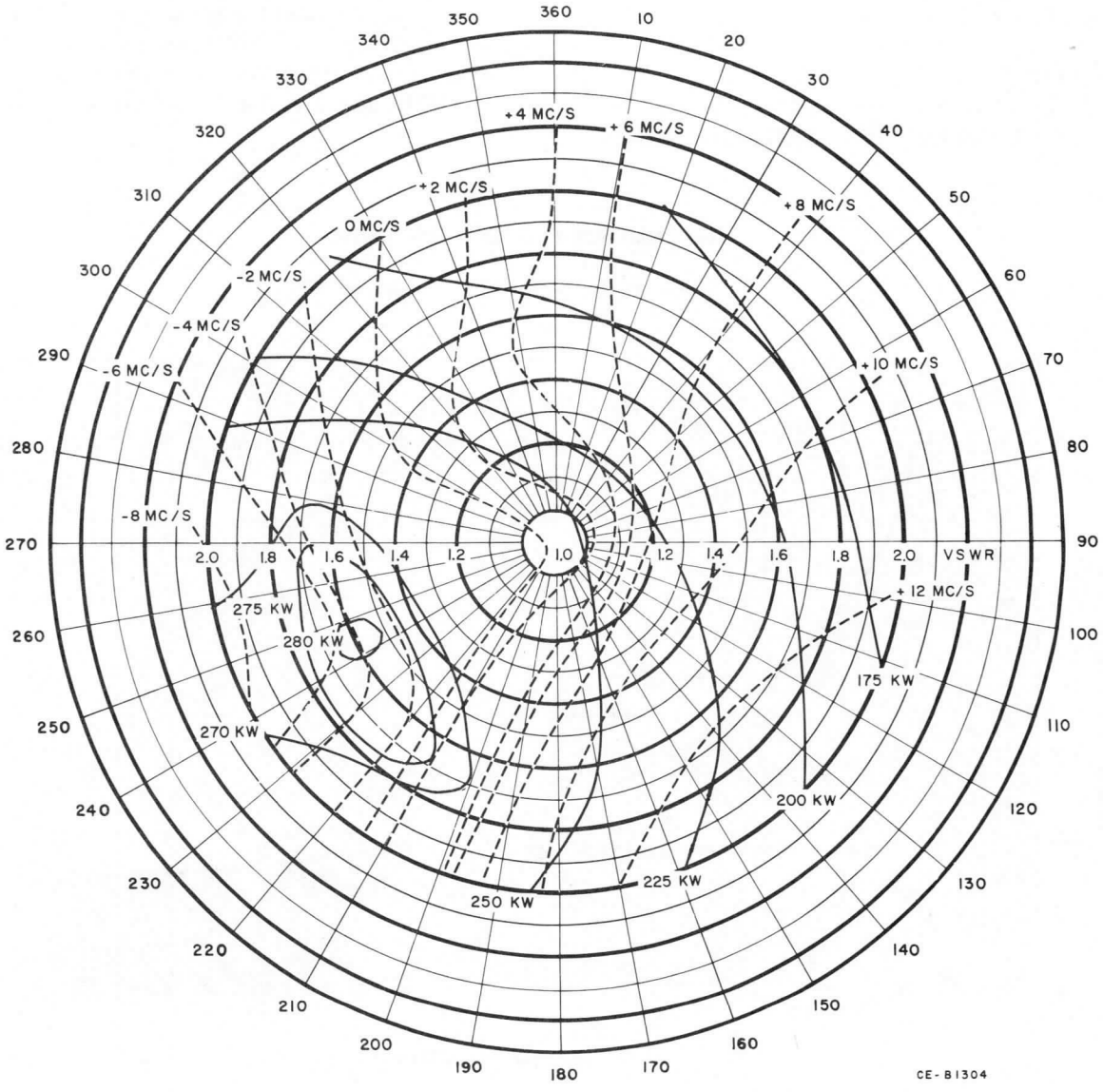

loaded and the r-f voltages inside the magnetron are increased, making internal r-f discharges more likely.

A second problem encountered with tunable magnetrons involves the distance between the mismatch and the tube flange. This is known as the "long lines" effect and is an additional limit on the VSWR that is permitted in the load as shown in CE-A 1305. If the load presents a high VSWR at a sufficient distance from the tube, discontinuities in the magnetron tuning characteristic may result. This can be avoided by using a short system or by keeping the VSWR low. The use of a ferrite isolator with the WL-193 provides a convenient solution of the problem.

PERFORMANCE:

Typical performance charts for the WL-193 are shown in CE-C 1306. The volt-ampere characteristics of the tube are shown with power output indicated with circles. The curves vary depending on the condition of the load and the tube frequency.

TUNING:

The WL-193 is particularly well suited for rapid tuning with motor drive systems. Tuning is accomplished by rotating a worm shaft which moves a calibrated gear. The calibrations on the gear, together with a geneva mechanism give an indication of the magnetron frequency. The gear drives the crown-of-thorns tuner through a carefully constructed thread drive. Speeds up to 1500 R.P.M. are permitted on the shaft which allow excursion of the frequency band (8600 to 9600 M.C. in approximately 7 seconds. No appreciable wear should be expected in 10000 complete excursions (8600 to 9600 M.C. and return) at the highest speed permitted.

RECOMMENDED OPERATING REGION

For WL-193 in RG-51 U Waveguide

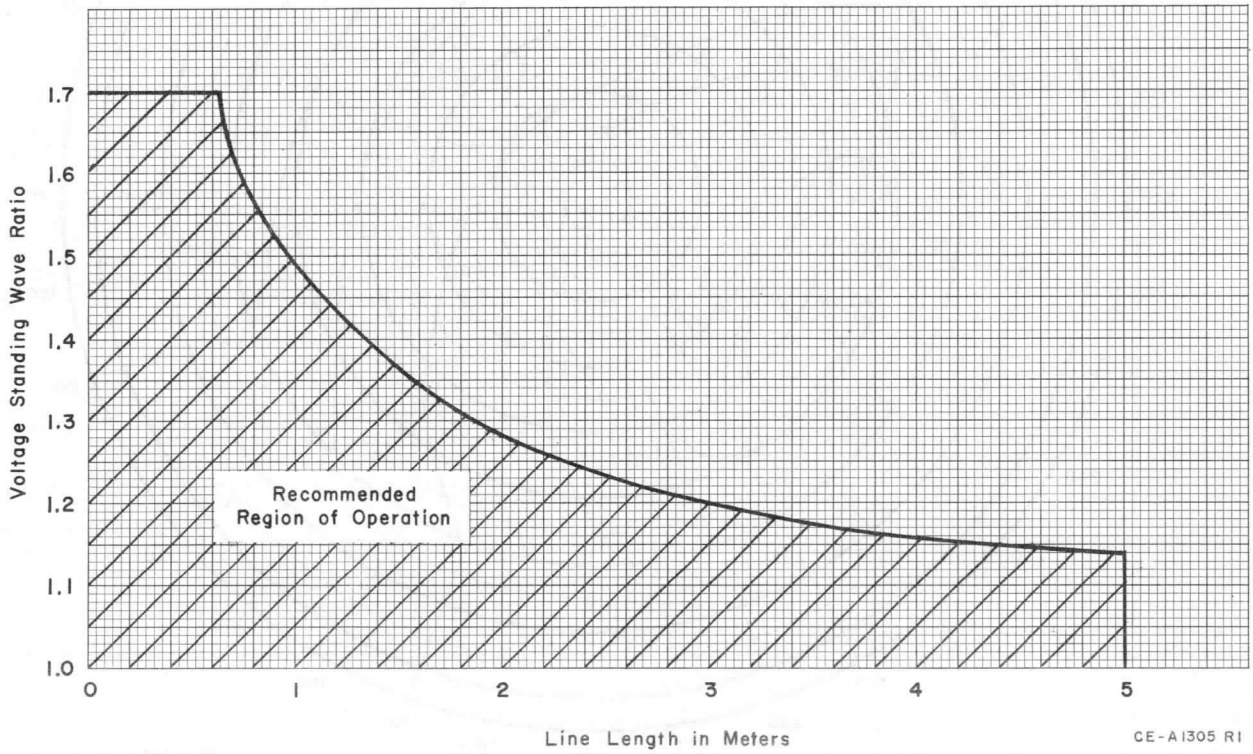

FREQUENCY MODULATION

Frequency modulation is a result of the magnetron changing frequency with input level (pushing) or jumping to a slightly different frequency at the beginning or in the midst of a pulse (jitter and stepping). A method of viewing this modulation is shown in CE-C1812. The WL-193 is especially designed to exhibit low pulse-to-pulse and inter-pulse frequency modulation.

CATHODE MEMORY

Many magnetrons exhibit a tendency to become unstable when operated on longer pulse widths immediately after lengthy operation on short pulse widths. This phenomenon is caused by the build-up of emitting materials on portions of the cathode structure which are not designed to be emitting surfaces. Longer pulse operation permits time for breakdown to occur which is enhanced by the presence of emission products from the cathode. The WL-193 is designed to resist these processes. The resistance to "cathode memory" is checked with the following life test:

Cycle	Osc.	Peak Anode Current	Pulse Width	Time	Heater Voltage
1	Non.	0	- -	3 Min.	9.0 V.
2	(1)	20 A.	0.25 μS.	24 Hrs.	8.0 V.
3	(3)	28 A.	2.5 μS.	3-10 Min.	7.0 V.
4	(1)	20 A.	0.25 μS.	24 Hrs.	8.0 V.
5	(3)	28 A.	2.5 μS.	3-10 Min.	7.0 V.

Repeat 2 through 5 for total of 700 hours.

Failure criteria for this test involves the measurement of stability immediately (within 5 seconds) after switching to Osc. (3) Operation. Stability limit is 0.8 max. % missing pulses. The WL-193 has demonstrated ability to remain sufficiently stable to pass this test.

METHOD OF MEASURING FM

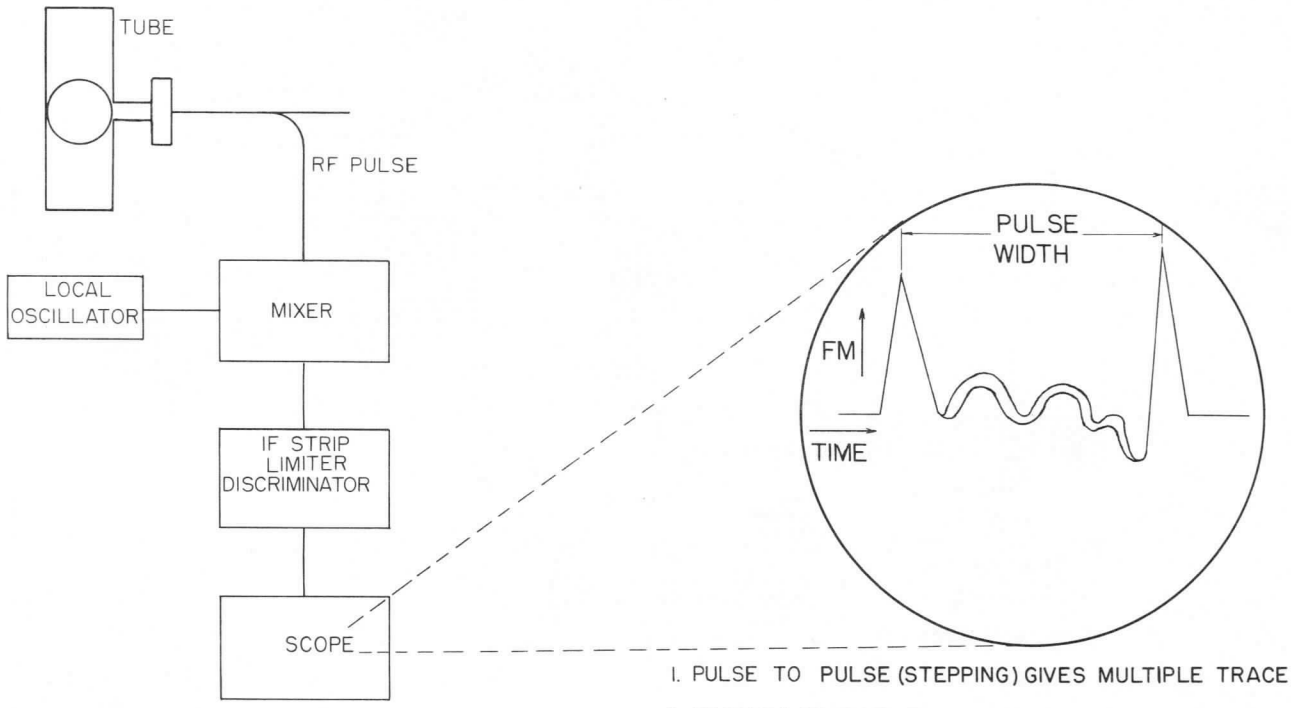

1. PULSE TO PULSE (STEPPING) GIVES MULTIPLE TRACE
2. INTRAPULSE FM (PUSHING) GIVES RIPPLES & SLOPE
3. GOOD PERFORMANCE HAS NO STEPPING & VERY LITTLE PUSHING

CE-C1812

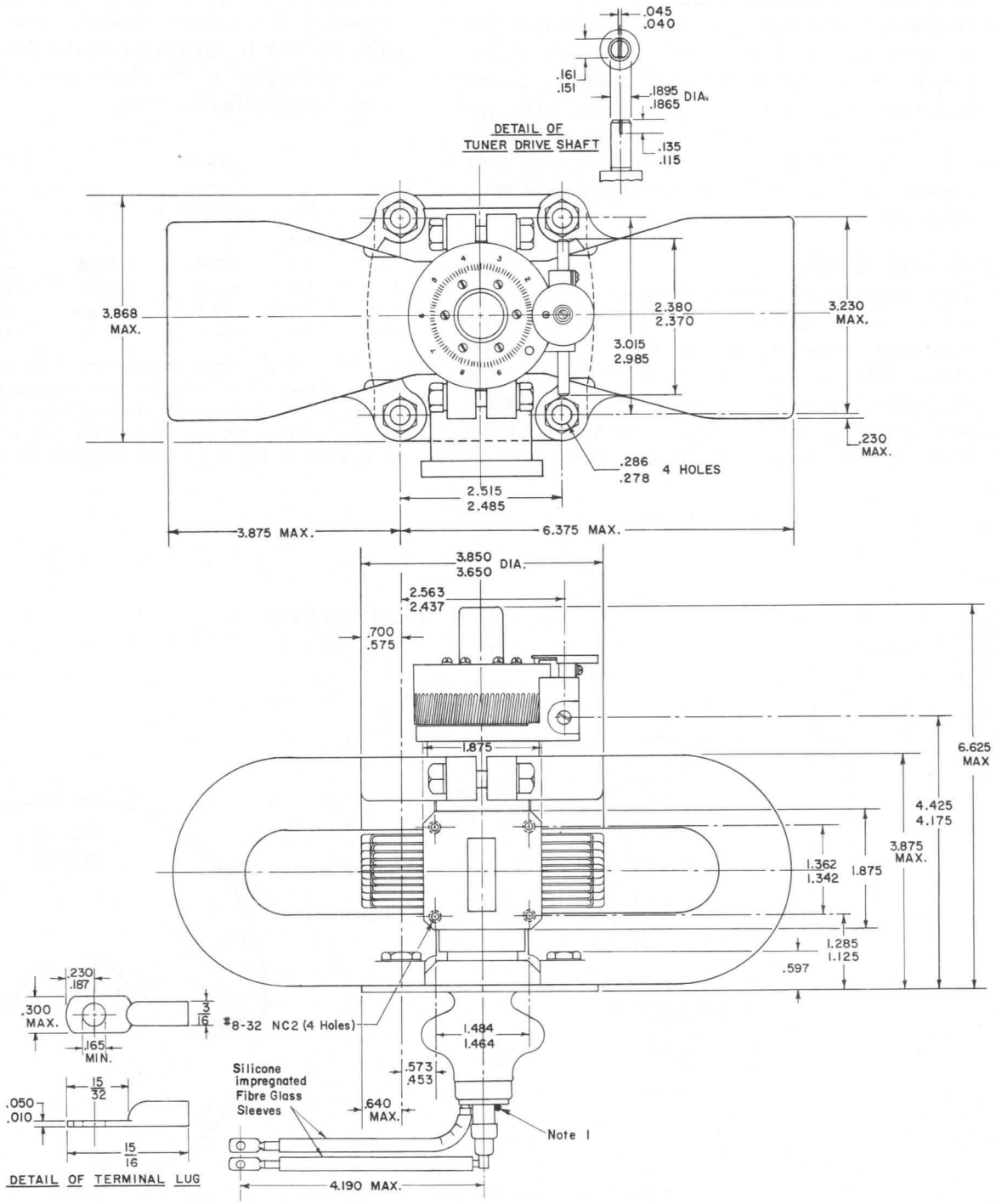
.045
.040
.161
.151
.1895
.1865 DIA.
DETAIL OF
TUNER DRIVE SHAFT
.135
.115
3.868
MAX.
2.380
2.370
3.230
MAX.
3.015
2.985
.230
MAX.
.286
.278 4 HOLES
2.515
2.485
3.875 MAX.
6.375 MAX.
3.850
3.650 DIA.
2.563
2.437
.700
.575
1.875
6.625
MAX
4.425
4.175
3.875
MAX.
1.362
1.342
1.875
1.285
1.125
.597
.230
.187
.300
MAX.
3/16
#8-32 NC2 (4 Holes)
.165
MIN.
1.484
1.464
.573
.453
Silicone
impregnated
Fibre Glass
Sleeves
.640
MAX.
Note 1
.050
.010
15/32
15/16
DETAIL OF TERMINAL LUG
4.190 MAX.

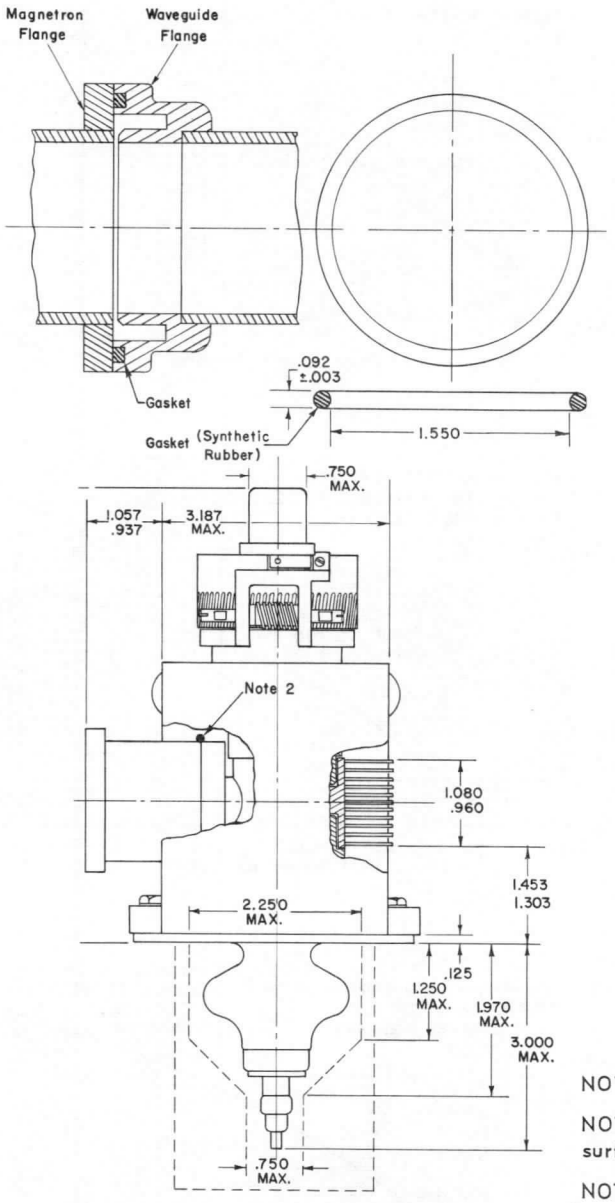

TYPICAL OPERATING CHARACTERISTICS

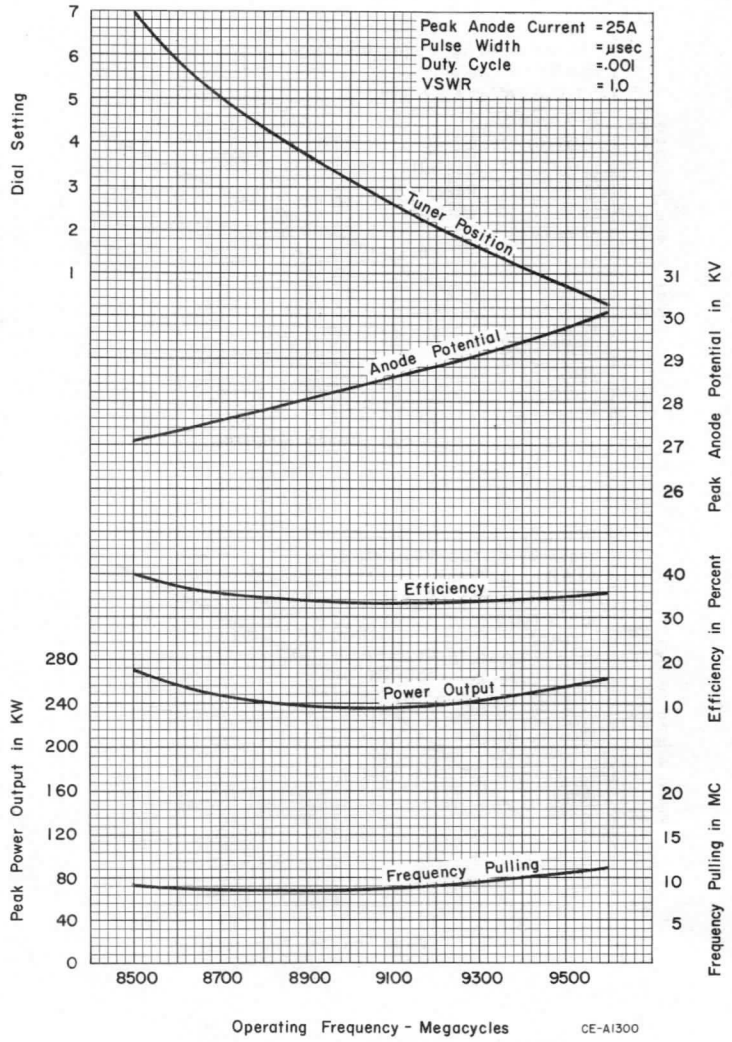

NOTE 1: Cathode bushing temperature should be measured at this point.

NOTE 2: Anode temperature should be measured at this point on surface of waveguide 1.500 inch from face of waveguide flange.

NOTE 3: Brown paint on terminal identifies the lead common to heater and cathode.

NOTE 4: All joints in mounting flange and waveguide assembly must be vacuum tight.

NOTE 5: Operating frequency increases as the tuner shaft is rotated in a counterclockwise direction as viewed from waveguide side of tube. Approximately 75 revolutions of the tuner shaft are required to tune from 8500 to 9600 megacycles.

PERFORMANCE CHART DATA
FOR
WL-193

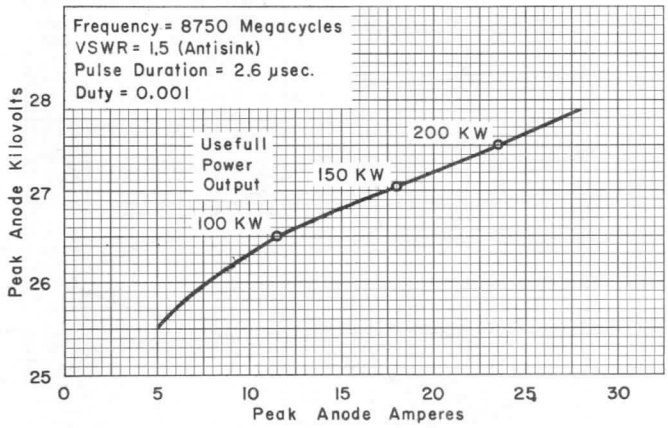

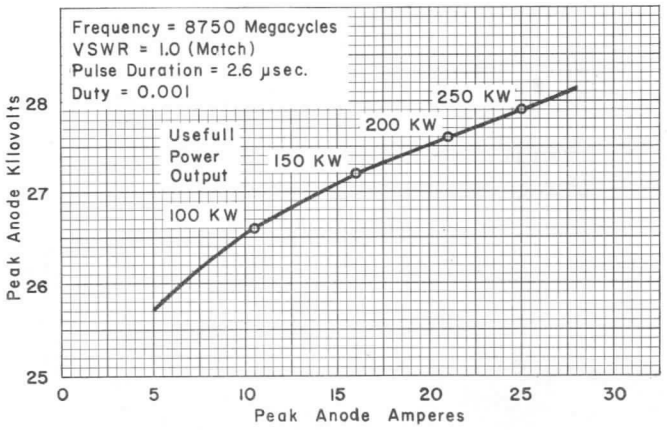

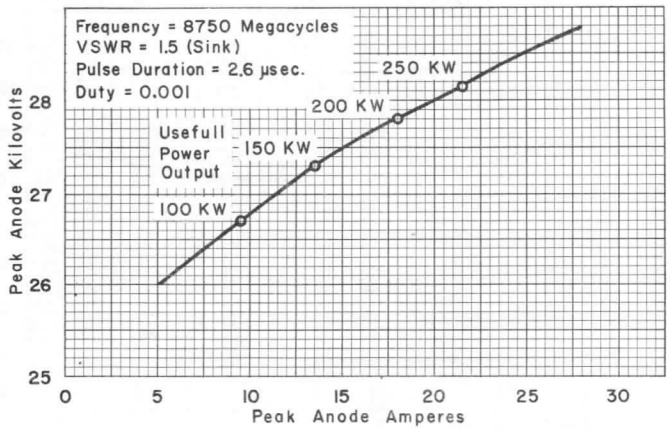

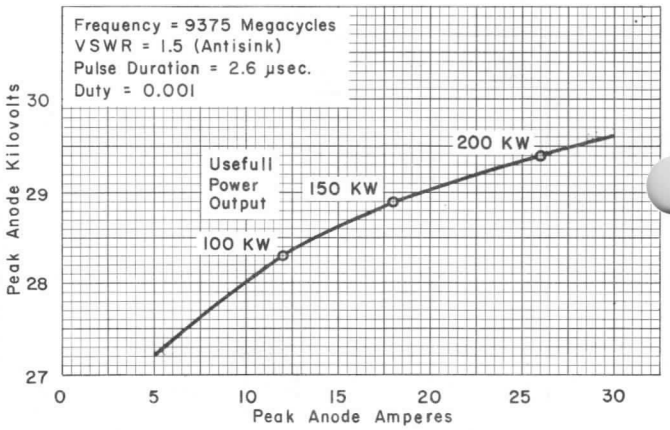

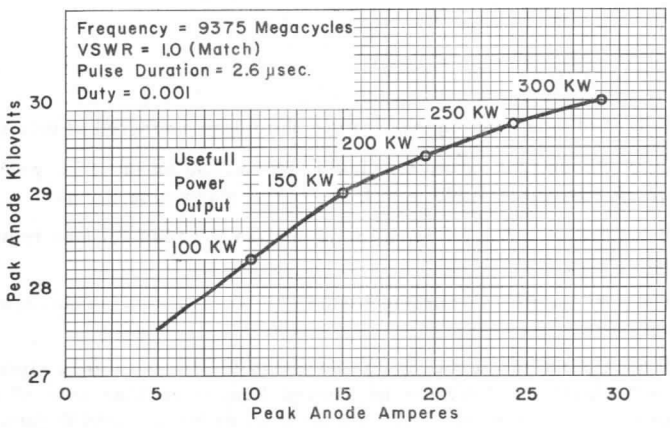

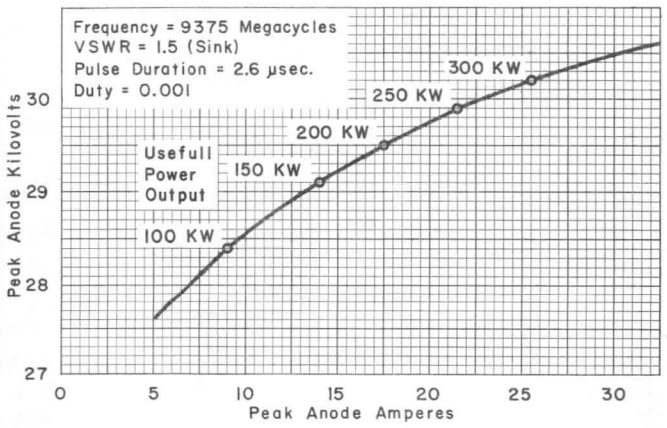

CE-C1306

The information contained herein is supplied without assuming responsibility for infringement of patents or other rights of third parties which may result from its use. No license is granted by implication or otherwise under any patent or patent rights of Westinghouse Electric Corporation.

HIGH POWER COMPONENT TEST MAGNETRON TYPE WX-3737

Tunable 8500 - 9600 Mc.

400KW Peak Power Output

The WX-3737 is a high power tunable X-band magnetron. It is designed to serve as a pulsed oscillator for component test at frequencies between 8500 and 9600 megacycles per second.

Each WX-3737 is individually calibrated. Peak voltage and heater voltage are typically 30KV and 7.0 volts respectively. For exact values, refer to the charts supplied with each tube. Power outputs up to 600 KW, pulse widths up to 0.5 microseconds and 400 KW at pulse widths up to 3.0 microseconds may be obtained. Operation beyond the plotted data on the performance chart is not recommended. Operation at greater than 400 average watts output endangers the output window and should be avoided. Pressurization of the output to approximately 2 atmospheres is recommended above 300 KW peak power output. Care should be taken to avoid allowing waveguide breakdown to travel back to the window of the WX-3737 as puncture can result. An airflow of at least 5 cfm should be directed onto the bulb potting to prevent overheating.

The WX-3737 is similar to the 6249.

Δ The WX- number identifies a specific laboratory design; the design and, consequently, the data and type number are subject to change. No obligations are assumed to manufacture this particular device in the future unless otherwise arranged. These drawings and specifications are the property of Westinghouse Electric Corporation, Electronic Tube Division, and shall not be reproduced or copied or used as the basis for the manufacture or sale of apparatus and/or devices without permission.

Westinghouse DEVELOPMENTAL DEVICE
Tentative Data

GENERAL DATA

ELECTRICAL:

Heater, for Unipotential Cathode:
- Voltage (ac) . . . . . 9.0 V
- Current at 9.0V. . . . . Minimum 12.8 A Max. 15.6 A
- Starting Current — Maximum instantaneous starting current must never exceed 2.5 times 15.6A or 39 amperes.

Minimum Cathode Heating Time . . . . . 180 sec.
Frequency . . . . . 8500-9600 mc.

MECHANICAL:

Mounting Position . . . . . Any
Dimensions . . . . . See Outline Drawing
Air Flow:
- To fins . . . An air stream should be directed along the cooling fins toward the body of the tube. Adequate flow provided so that the temperature of the anode block does not exceed 125°C.

Cathode Bushing . . . . . Silicone Potted
Waveguide Output Flange . . . . . Mates with Modified JAN UG-52/U
Tuner . . . . . Calibrated, with shaft for motor drive

Tuning Torque:
- Tube . . . . . .1.5 in. lbs. max.
- Equipment . . . . . .12 in. lbs. max.

Shaft Speed . . . . . .1500 r.p.m. max.
Pressurization of Output . . 15 psia (min.) 45 psia (max.)
Weight (Approx.) . . . . . 16 pounds 4 ounces

PULSED OSCILLATOR SERVICE

MAXIMUM AND MINIMUM RATINGS:

	Min.	Max.	
Peak Anode Current		50	amp.
Peak Power Input		1800	KW
Duty		.0013	
Pulse Duration		3.1	us
Rate of Rise of Voltage Pulse. .	90	150	kv/usec
Anode Block Temperature		125	°C
Cathode Bushing Temperature . .		270	°C
Load Voltage Standing Wave Ratio		1.1	

Input Pulse Circuitry. . . . . A discharging network type pulser or other type which limits the fault power which could be applied to the magnetron to twice the normal pulse power must be used.

PERFORMANCE DATA FOR TYPE WX-3737
Matched Load at 0.5 μ sec. Pulse Width with 0.0005 Duty

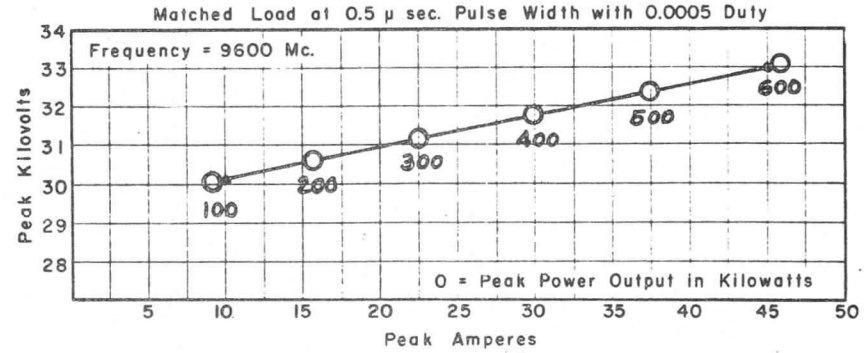

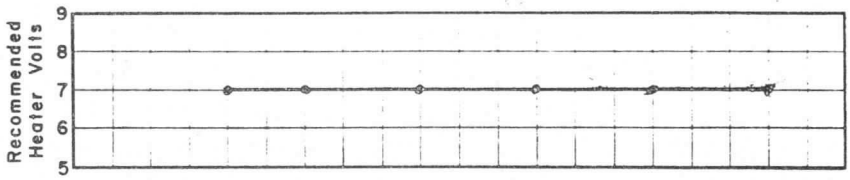

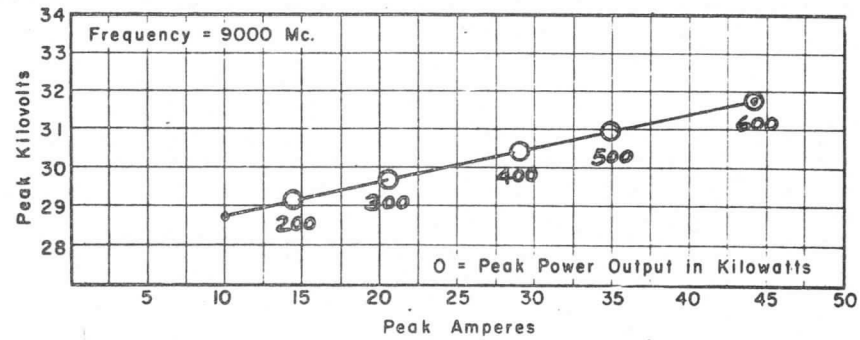

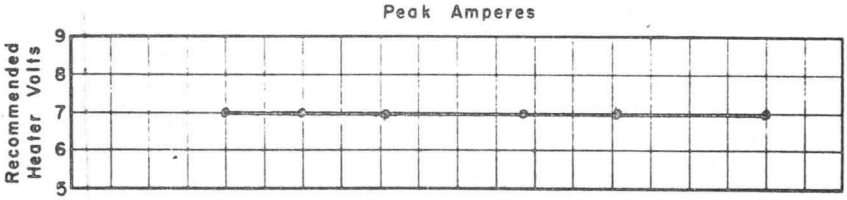

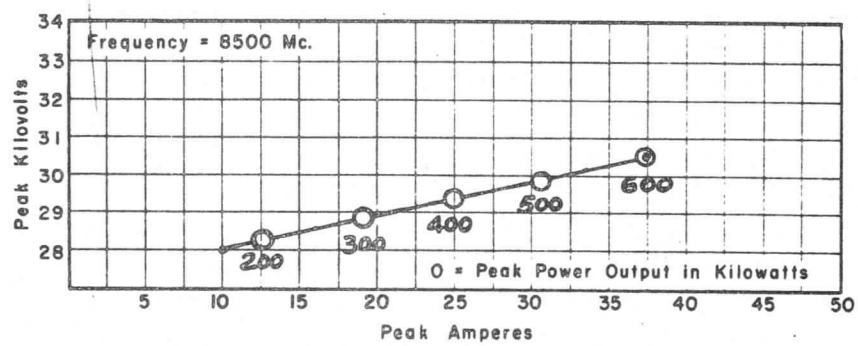

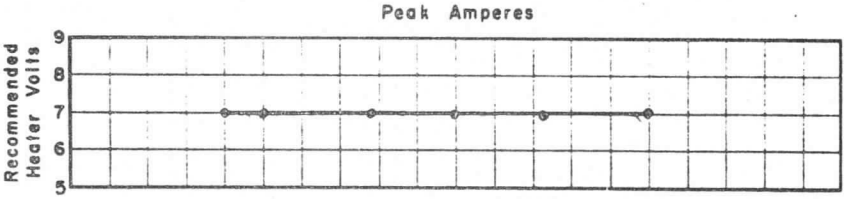

Westinghouse

DEVELOPMENTAL DEVICE
Tentative Data

PERFORMANCE DATA FOR TYPE WX-3737
Matched Load at 2.5μ sec. Pulse Width with 0.001 Duty

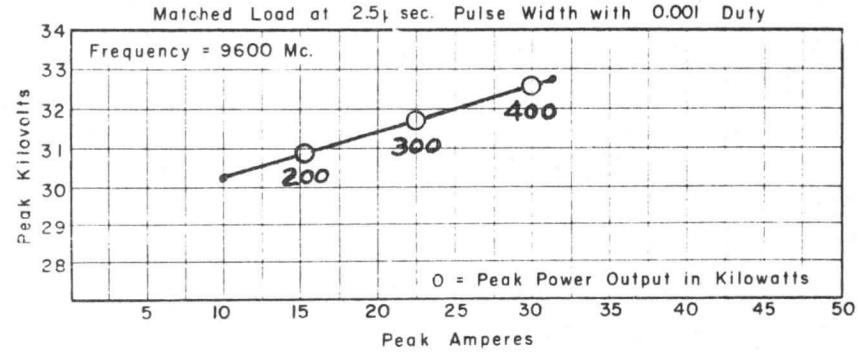

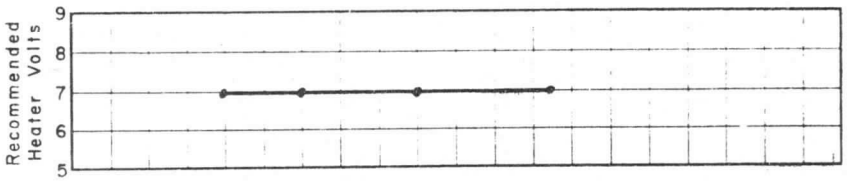

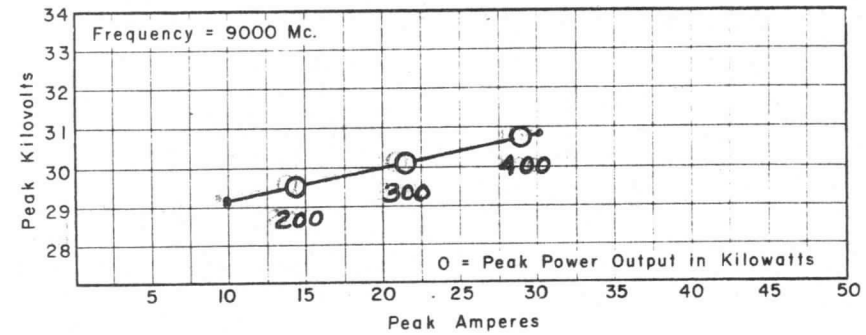

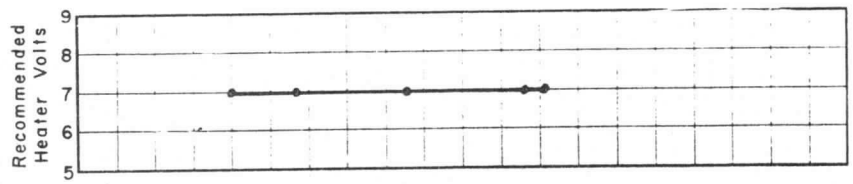

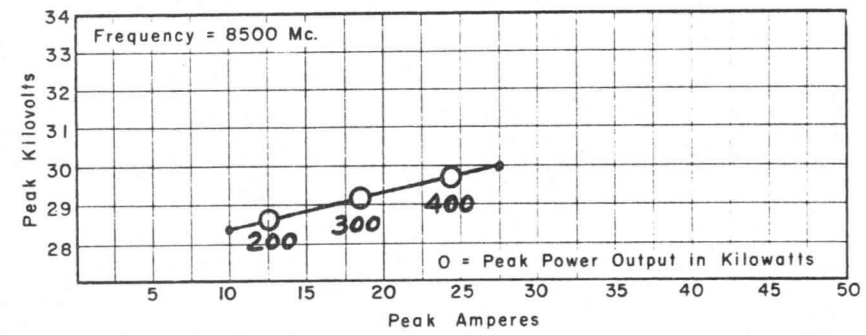

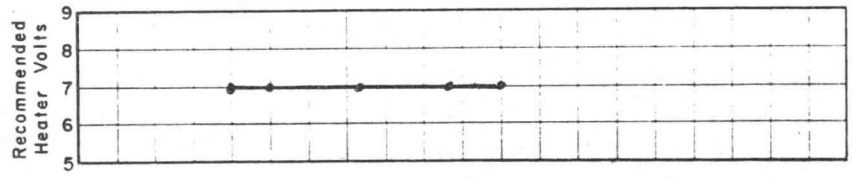

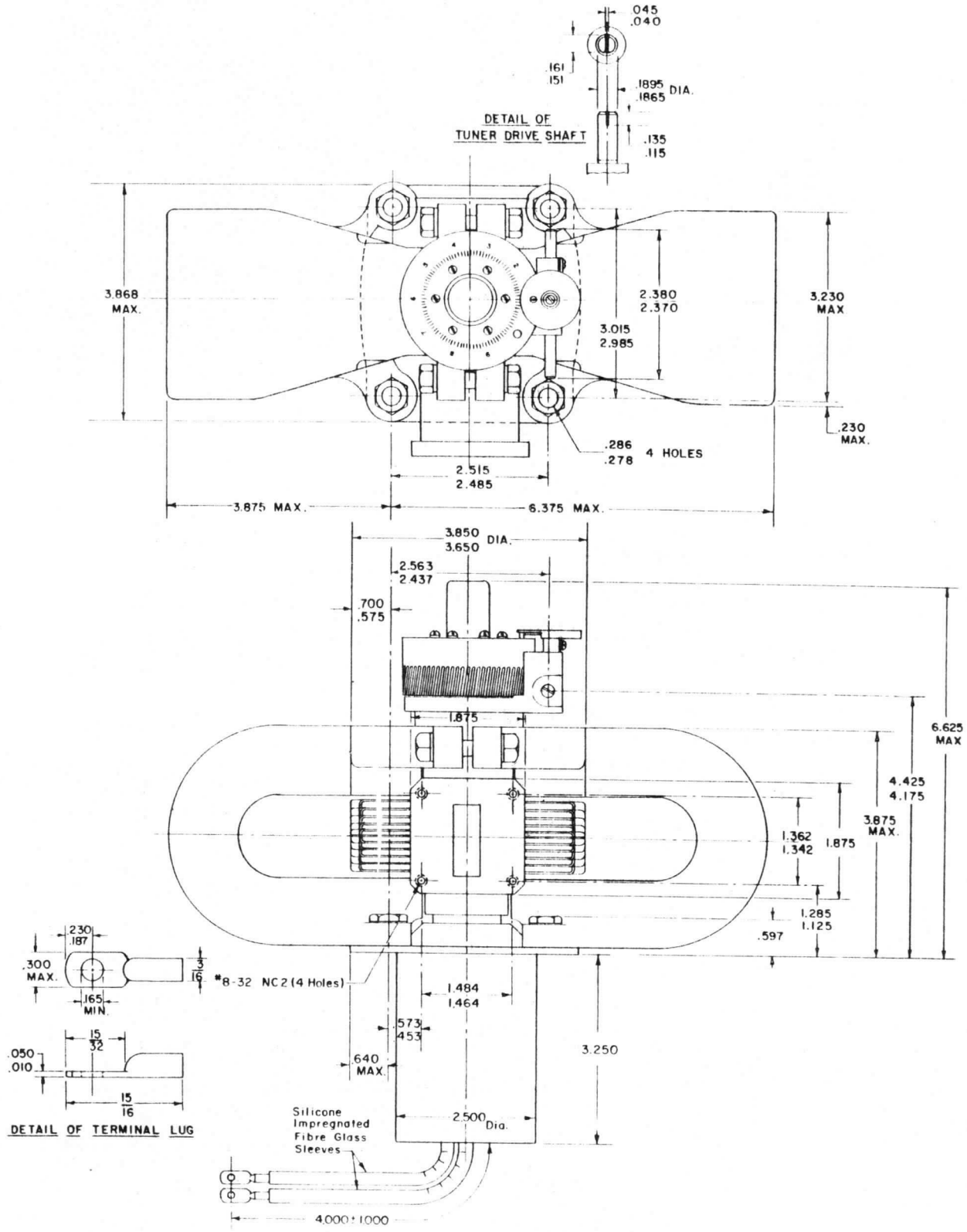
.045
.040
.161
.151
.1895
.1865 DIA.
DETAIL OF
TUNER DRIVE SHAFT
.135
.115
3.868
MAX.
2.380
2.370
3.230
MAX
3.015
2.985
.230
MAX.
.286
.278 4 HOLES
2.515
2.485
3.875 MAX.
6.375 MAX.
3.850
3.650 DIA.
2.563
2.437
.700
.575
1.875
6.625
MAX
4.425
4.175
3.875
MAX.
1.362
1.342
1.875
1.285
1.125
.597
.230
.187
.300
MAX.
3/16
*8-32 NC2 (4 Holes)
.165
MIN.
1.484
1.464
.573
.453
.640
MAX.
3.250
15/32
.050
.010
15/16
DETAIL OF TERMINAL LUG
Silicone
Impregnated
Fibre Glass
Sleeves
2.500 Dia.
4.000±1.000

Westinghouse

DEVELOPMENTAL DEVICE
Tentative Data

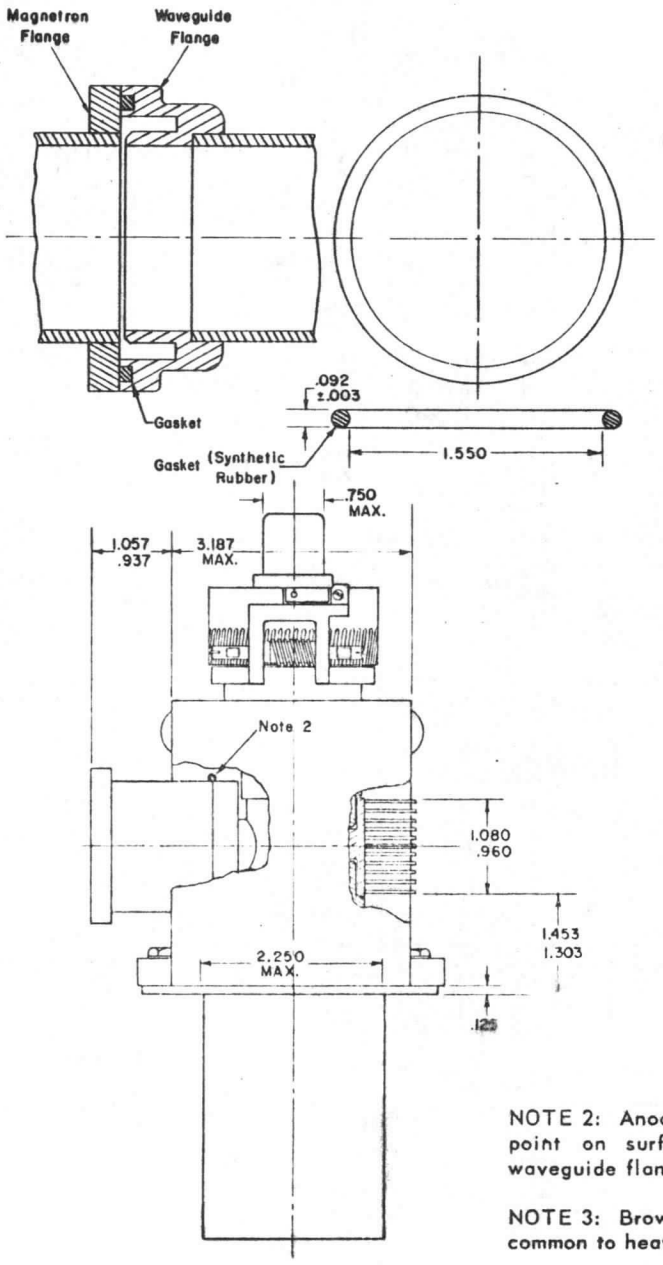

NOTE 2: Anode temperature should be measured at this point on surface of waveguide 1.500 inch from face of waveguide flange.

NOTE 3: Brown paint on terminal identifies the lead common to heater and cathode.

NOTE 4: Operating frequency increases as the tuner shaft is rotated in a counterclockwise direction as viewed from waveguide side of tube. Approximately 75 revolutions of the tuner shaft are required to tune from 8500 to 9600 megacycles.

MAGNETRON TYPE WX-4700

Hand Tunable
8500 - 9600 Mc.

200 KW Peak
Power Output

The WX-4700 is a tunable X-Band coaxial magnetron. It is designed to serve as a pulse oscillator at frequencies between 8500 and 9600 megacycles per second.

The WX-4700 has a typical power output of approximately 200 kilowatts over its entire frequency range. Pulse widths up to 2.5 microseconds may be used. The WX-4700 provides excellent spectrum shape and excellent stability of operation. The pulling figure, or variation in frequency with mismatch, of coaxial magnetrons is lower, by a factor of 3 or 4 times, than that of conventional magnetrons. The pushing figure is also very low in coaxial magnetrons which is largely due to the excellent stability.

Structurally, the WX-4700 employs a slotted vane type anode. Tuning is accomplished by means of a plunger which is coupled to the main resonator. Tuning is therefore accomplished remote from the interaction space greatly improving the electrical and thermal stability.

An impregnated cathode is used which is arc resistant and has excellent life properties. The WX-4700 has a wave guide type output which is designed to couple to a modified UG-52A/U choke flange. The output may be pressurized, although no breakdown will occur if pressure is maintained at 1 atmosphere.

The WX-4700 is designed for transmitter service in radar systems. The tube is useful in ground as well as airborne installations where a high performance X-band power source is required.

ELECTRICAL

Heater, for Unipotential Cathode:

Voltage (ac)	13.75 Volts
Current at 13.75 Volts	Min. 2.7, Max. 3.5 Amperes
Starting Current	Maximum instantaneous starting current must never exceed 12 amperes.
Minimum Cathode Heating Time	150 Seconds
Frequency	8500-9600 Megacycles
Maximum Frequency Pulling at VSWR of 1.5	5 Megacycles

Δ The WX- number identifies a specific laboratory design; the design and, consequently, the data and type number are subject to change. No obligations are assumed to manufacture this particular device in the future unless otherwise arranged. These drawings and specifications are the property of Westinghouse Electric Corporation, Electronic Tube Division, and shall not be reproduced or copied or used as the basis for the manufacture or sale of apparatus and/or devices without permission.

MECHANICAL

Mounting Position. . . . . Any
Dimensions. . . . . See Outline Drawing
Air Flow. . . . An air stream should be directed along the cooling fins toward the body of the tube. Adequate flow should be provided so that the temperature of the anode block does not exceed 150°C.
Cathode Bushing (Note 1). . . . Oil Immersed or Pressurized
Waveguide Output Flange. . Mates with modified JAN UG-52/U
Cathode Connector. . . The cathode connector should contain a built-in capacitor such as the Jettron No. 9000-C manufactured by Jettron Products, Hanover, New Jersey
Tuner. . . . . Calibrated, with Lock
Net Weight (Approx.). . . . . 14 Pounds
Shipping Weight. . . . . 25 Pounds

PULSED OSCILLATOR SERVICE

RATINGS:

Peak Anode Voltage. . . . . 23 Kilovolts
Peak Anode Current. . . . . 27.5 Amperes
Peak Power Input. . . . . 630 Kilowatts
Duty. 0.001
Pulse Duration. . . . . 2.5 Microseconds
Rate of Rise of Voltage Pulse. . . . . 200 kv/μsecond
Anode Block Temperature. . . . . 200°C
Cathode Bushing Temperature. . . . . 165°C
Load Voltage Standing Wave Ratio. 1.5

TYPICAL OPERATION WITH LOAD
VOLTAGE STANDING WAVE RATIO
EQUAL TO OR LESS THAN 1.05 EXCEPT AS NOTED

WITH DUTY CYCLE OF 0.001

Heater Voltage (Note 2).	--	--	
Peak Anode Voltage.	22	22	Kilovolts
Peak Anode Current.	27.5	27.5	Amperes
Pulse Repetition Rate	2000	400	cps
Pulse Duration.	0.5	2.5	μseconds
RF Bandwidth with worst phasing of 1.5 VSWR.	4.0	0.8	Megacycles
Side Lobes.	10	8	dB
Pulling Figure at VSWR of 1.5	3	3	Megacycles
Pushing Factor (20 to 30A)	20	20	KC/A
Thermal Factor for any 30° range between -55°C and 150°C. . .	0.2	0.2	Mc/°C
Peak Power Output.	220	220	Kilowatts

NOTES

1. No breakdown will occur if pressure is maintained above 600 mm Hg. Air flow must be sufficient to keep bushing below 165°C.
2. Heater voltage should be 0 volts for maximum life at 27.5 ma. and 0.001 duty. Higher voltages are permissible but may result in short life.

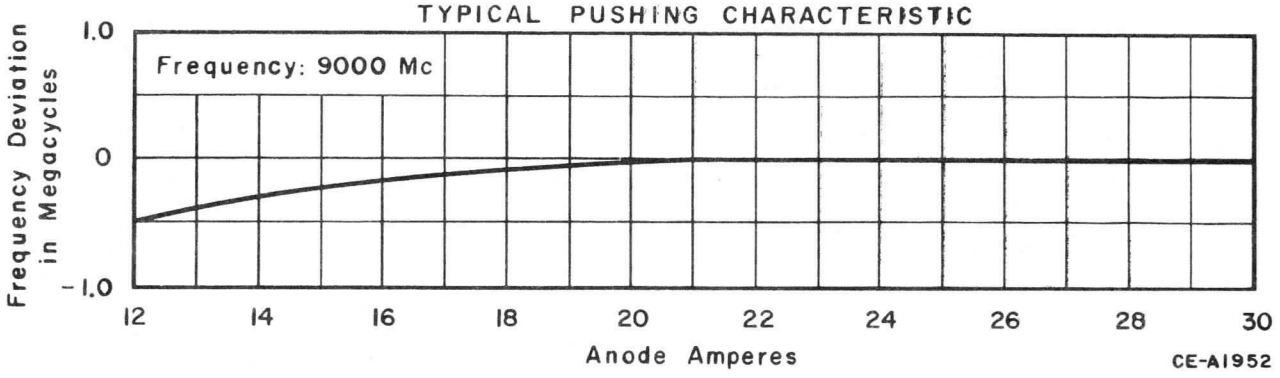

Westinghouse

DEVELOPMENTAL DEVICE
Tentative Data

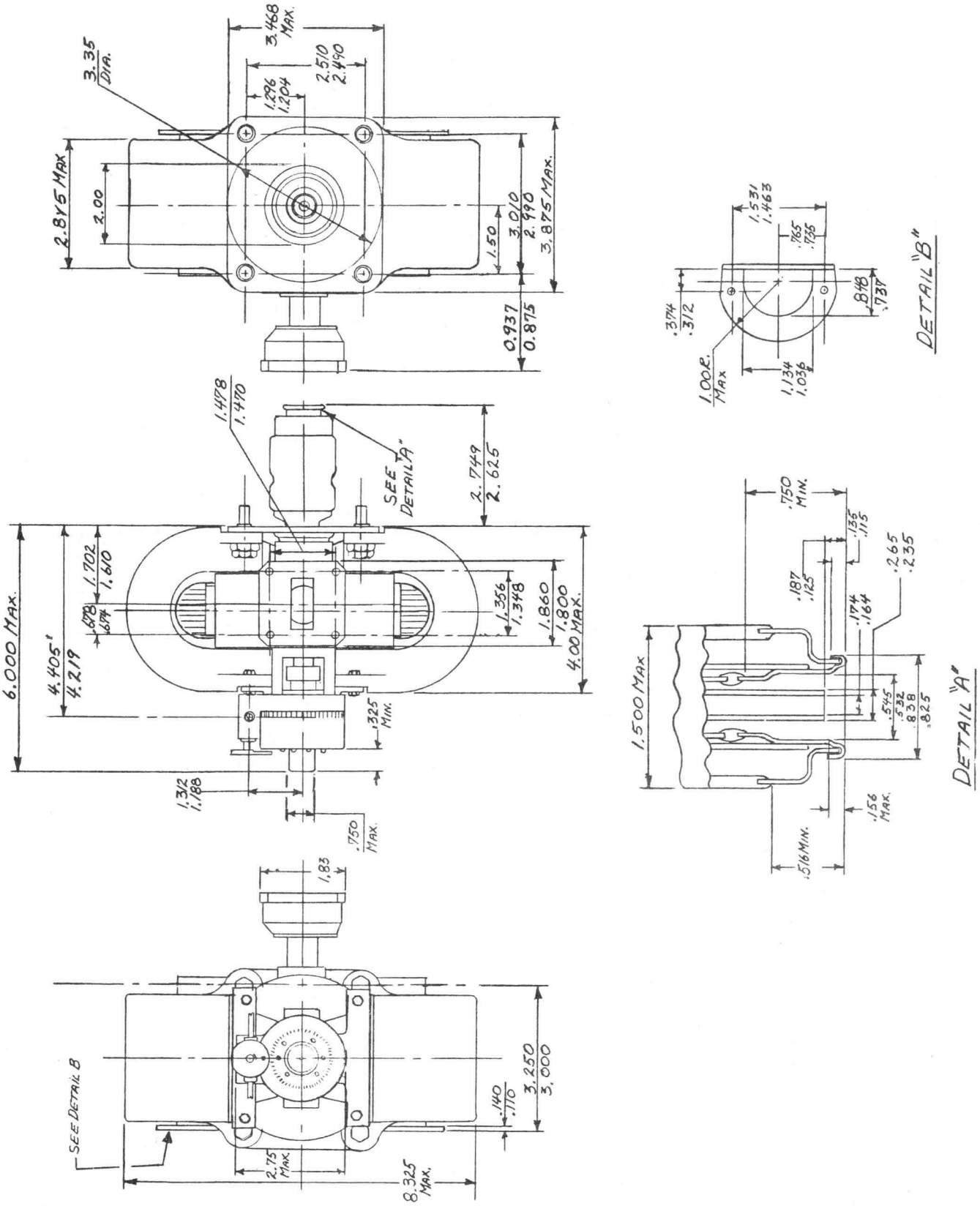

MAGNETRON WX-4742

Hand Tunable with Lock
8500-9600 M.C.

Electromechanically Step Tunable
Forced Air Cooled, Integral Magnet

230 KW Peak
Power Output

The WX-4742 is a tunable X-band magnetron. It is designed to be interchangeable with the WL-7111 and is applicable where narrow band frequency diversity is desired. The tuner design allows the tube to be set at any desired frequency and locked in place. An electromechanically actuated step tuner may then be actuated which will provide alternate pulse operation in two frequencies which may be separated by 10 to 40 megacycles.

The step frequency for the WX-4742 is approximately 600 cycles. This allows step frequency operation at a pulse repetition rate of 1200 if two discrete pulse spectra are desired. This step frequency can be modified to other frequencies where discrete stepping is desired for other pulse repetition rates. A feedback coil is provided to assist in stabilizing step control.

TYPICAL OPERATION

Heater Voltage (Note 1)	13.75	Volts
Peak Anode Voltage	22	Kilovolts
Peak Anode Current	27.5	Amperes
Pulse Duration	0.83	μSecond
Pulse Repetition Rate	1200	CPS
Peak Power Output	230	Kilowatts
Step Frequency	600	CPS
Step Amplitude	20	Megacycles
Step Drive	0.5	Volts
Step Coil Resistance	0.5	Ohms

Note

1. 0 at full duty operation

Δ The WX- number identifies a specific laboratory design; the design and, consequently, the data and type number are subject to change. No obligations are assumed to manufacture this particular device in the future unless otherwise arranged. These drawings and specifications are the property of Westinghouse Electric Corporation, Electronic Tube Division, and shall not be reproduced or copied or used as the basis for the manufacture or sale of apparatus and/or devices without permission.

Westinghouse

DEVELOPMENTAL DEVICE
Tentative Data

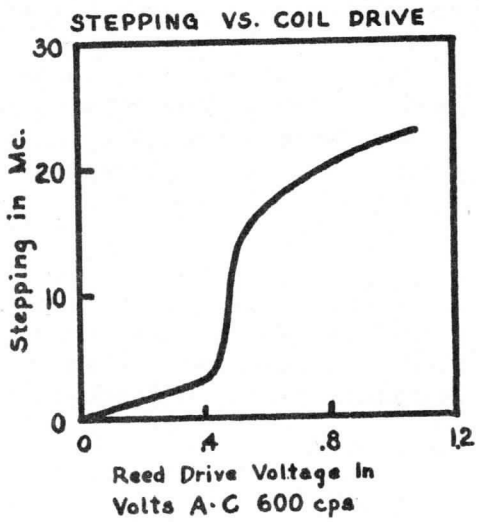

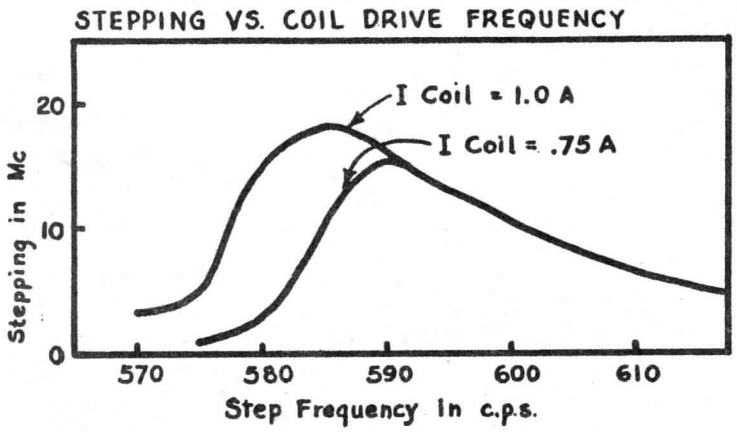

NOTES FOR OUTLINE DRAWING

1: Reference plane A is defined as the plane through that portion of the mounting flange designated as annular surface D. Reference plane B is defined as the plane which is perpendicular to plane A and passes thru the exact centers of mounting flange holes number 2 and number 3. Reference plane C is defined as the plane which is perpendicular to plane A and plane B and passes thru the exact center of mounting flange holes number 3 and number 4.

2: Surfaces D and E of the waveguide output flange and the mounting flange are made so that they may be used to provide a hermetic seal. This surface shall be flat within 0.015 TIR with a surface roughness of 32 per MIL-STD-10.

3: The axis of the heater-cathode terminal will be within the confines of a cylinder whose radius is 3/64 inch and whose axis is perpendicular to reference plane A at the specified location.

4: Allpoints on mounting flange other than specified in Note 1 must lie within 0.015 inch above or below reference plane A.

5: The limits include angular as well as lateral deviations.

6: These dimensions define extremities of the 0.169 inch internal diameter of the cylindrical heater-terminal.

7: These dimensions define extremities of the 0.540 inch internal diameter of the cylindrical heater-cathode terminal.

8: No part of the connector device for the heater and heater-cathode terminals should bear against the underside of this lip.

OUTLINE DRAWING

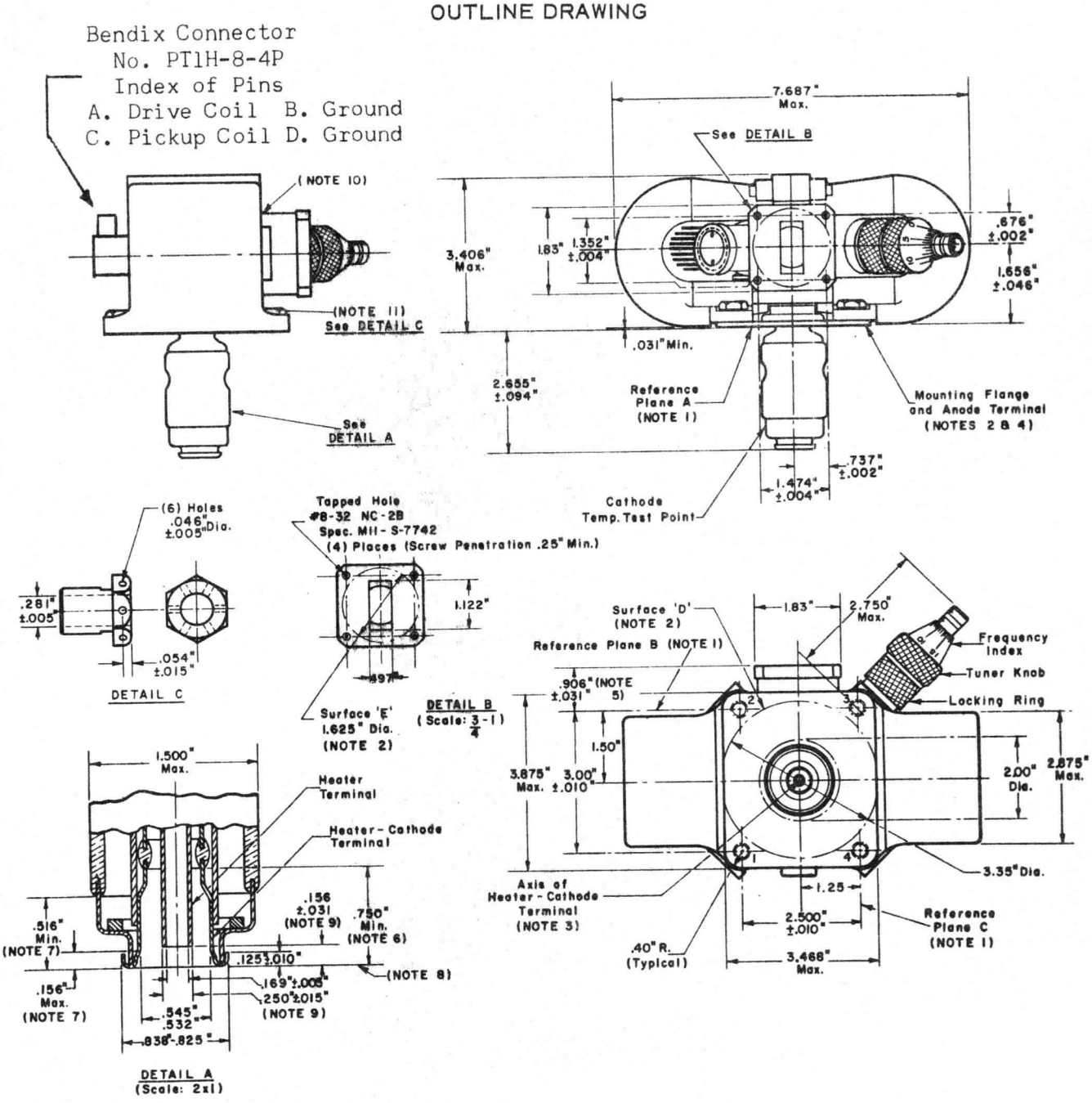

OUTLINE DRAWING NOTES CONTINUED

9: The heater terminal and the heater-cathode terminal are concentric within 0.010 inch.

10: Anode temperature shall be measured at junction of waveguide and anode back.

11: A 1-3/32" minimum long stud thru the mounting holes shall not interfere with any part of the tube.

COAXIAL MAGNETRON TYPE WX-4913
35 Kilo-megacycles

The WX-4913 is a light-weight, compact 35 KMc magnetron featuring a central cathode with a TE_{011} mode coaxial cavity surrounding the vane system. The modified UG-599/U waveguide output flange couples to WR-280 waveguide.

The WX-4913 also features low voltage operation. Modulator design is thereby simplified inasmuch as oil potting of the cathode terminal and input pulse transformer are not required.

MECHANICAL

Size.	See Outline
Weight (approx.). .	6 Pounds
Output.	Mates with WR-280 Waveguide
Mounting Position . . .	Any

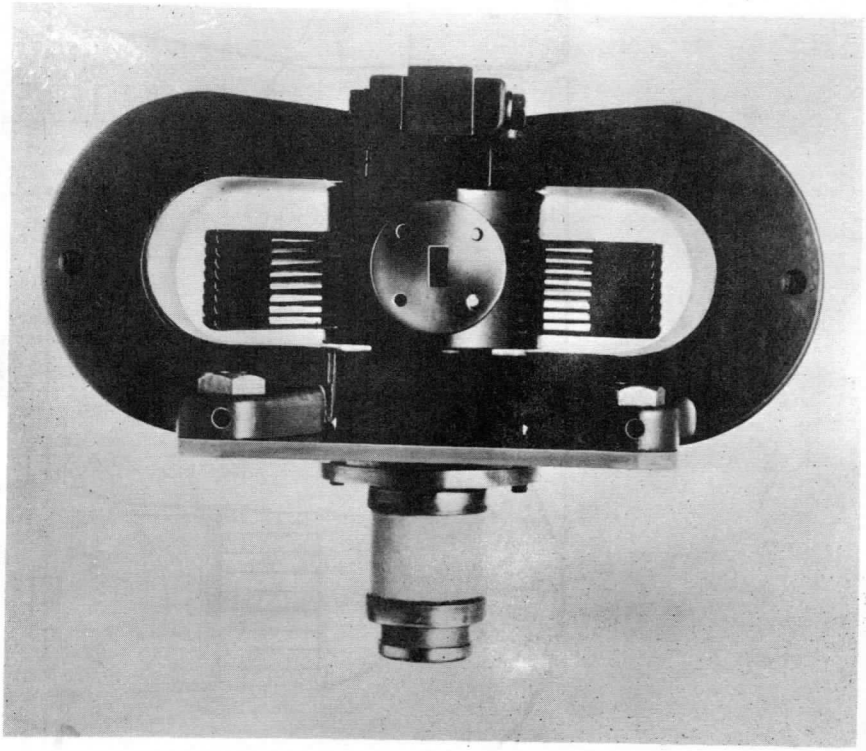

ELECTRICAL

Frequency (Note 1). .	35 KMc
Peak Anode Voltage. . .	5 KV
Peak Anode Current. . .	80 A
Peak Power Output . .	100 KW
Duty	0.001
Pulling Factor	8 Mc
Pushing Factor . .	0.3 Mc/A

NOTE

1. For information on tunable versions, contact Westinghouse Tube Division Sales Dept. outlining your design requirements.

Δ The WX- number identifies a specific laboratory design; the design and, consequently, the data and type number are subject to change. No obligations are assumed to manufacture this particular device in the future unless otherwise arranged. These drawings and specifications are the property of Westinghouse Electric Corporation, Electronic Tube Division, and shall not be reproduced or copied or used as the basis for the manufacture or sale of apparatus and/or devices without permission.

WESTINGHOUSE ELECTRIC CORPORATION, ELECTRONIC TUBE DIVISION, ELMIRA, NEW YORK

Los Angeles 17, California
600 St. Paul Avenue
Phone HUntley 2-9660

San Lorenzo, California
2222 Grant Avenue
Phone EXbrook 2-5353

Elmira, New York
Box 284
Phone REgent 9-3611

Washington 6, D.C.
1625 K Street N.W.
Phone NAtional 8-8843

Chicago 9, Illinois
2211 W. Pershing Road
Phone WHitehall 4-3860

Boston, Massachusetts
10 High Street
Phone LIberty 2-0600

Detroit 32, Michigan
Box 502, 5757 Trumbull Ave.
Phone TRinity 2-7010

Bloomfield, New Jersey
MacArthur Avenue
Phone HUmbolt 4-3000

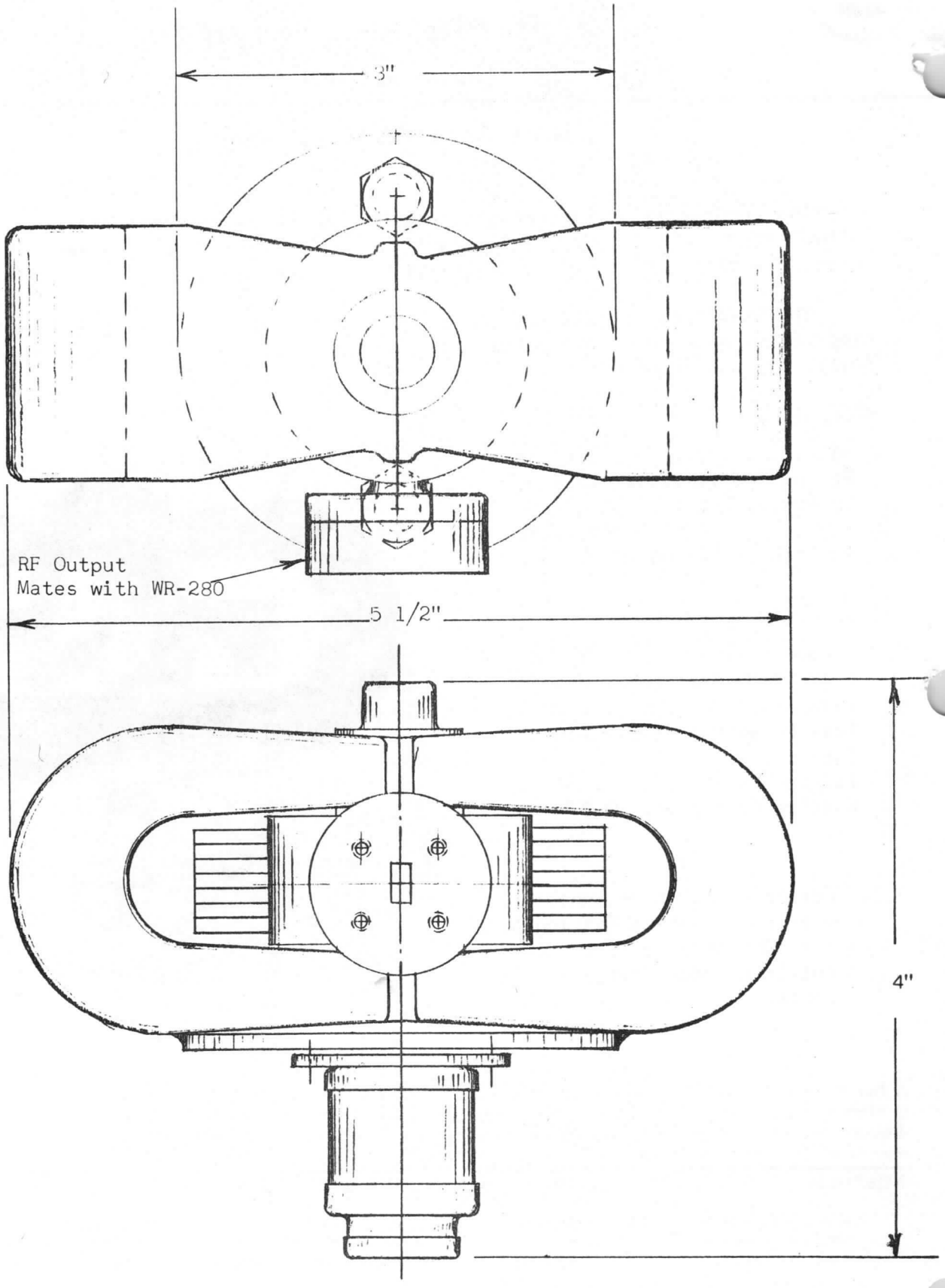
3"
RF Output
Mates with WR-280
5 1/2"
4"

December 23, 1957

MAGNETRON TYPE WL-6177

Fixed Frequency CW
Between 4268 and 4350 M.C.

One Watt Nominal
Power Output

Frequency Modulated 2%
Integral Magnets

The WL-6177 is a magnetron designed for continuous wave operation. It can be electro-mechanically frequency modulated about a single center frequency over a range of about two per cent.

Power output, when operating into a load with a VSWR of less than 1.1, is greater than one watt. Center frequency is between 4268 and 4350 megacycles. Peak to peak frequency deviation from zero to 85 megacycles is practical. Structurally, the WL-6177 employs a double strapped, vaned anode structure, and an oxide coated cathode. This cathode has been produced by special techniques to insure high surface density and smoothness, with ability to withstand the conditions of oscillation. The folded heater is rigidly supported by the cathode sleeve. R. F. power is delivered through a standard coaxial BNC female connector. D. C. and control voltages are applied to a terminal strip through eight pins in a straight line.

The magnetic field is produced by two permanent magnets encased with the tube in a steel shell which acts as an effective magnetic shield, except for very strong alternating fields.

ELECTRICAL:		
Cathode	Coated Unipotential	
Heater:		
Voltage■	6.3	dc Volts
Current	0.6 ± 10%	Ampere
Heating Time (Minimum)	40	Seconds
Reed Drive Coil Resistance♦	0.3 to 0.4	Ohms
Reed Pick-Up Coil Resistance♦	0.55 to 0.7	Ohms
Anode at Ground Potential		
MECHANICAL:		
Max. Overall Length	3.250	Inches
Max. Diameter (Excluding Terminals)	1.656	Inches
Connectors:		
Output	BNC Connector Jack JAN UG-89/U	
Operating Voltages	Special 8-Pin In-Line Socket	
Cooling	Unrestricted Air Convection	
Ambient Temperature	-55 to +70	°C
Shell Temperature	25° C above Ambient	
Vibration: §		
Frequency	25	Cycles
Amplitude	0.080	Inches
Net Weight	1	Pound
Shipping Weight	2	Pounds

Operating Position . . . . . The tube may be operated in any position. The connectors do not provide mechanical support. Non-magnetic clamps should be used to support the shell. Operation in positions other than base horizontal may shift center frequency by maximum of 0.1%.

TYPICAL OPERATION: CONTINUOUS WAVE OSCILLATOR

Load Voltage-Standing-Wave-Ratio 1.1 Max.

	Min.	Typical	Max.	
Heater Voltage■	5.7	6.3	7.0	Volts
Heater Current	.54	.63	.66	Amps
Anode Voltage	275	315	330	Volts
Anode Current	--	30	--	Ma
Power Output	1.0	1.5	--	Watts
Frequency	4268	4300	4350	Megacycles
Pulling Figure for VSWR of 1.5	--	--	4.0	

TYPICAL OPERATION: FREQUENCY MODULATED OSCILLATOR

Load Voltage-Standing-Wave-Ratio 1.15 Max.

Heater Voltage■	5.7	6.3	7.0	Volts
Heater Current	.54	.63	.66	Amps
Anode Voltage	275	315	330	Volts
Anode Current	--	30	--	Ma
Power Output	1.0	1.5	--	Watts
FM Drive Voltage for 76 Mc Swing	.17	.30	.48	Volts
FM Drive Voltage Frequency	60	100	125	Cycles/Sec.
Bandwidth Linearity★	--	.05	.15	

LIFE TEST:

With the tube operating as a continuous wave oscillator, a 60 cycle per second signal of 0.2 Vac is applied to the reed drive coil. The pickup coil is open circuited. Voltages are cycled in the following manner:

Condition	Duration	Ef	Ib	E Drive
1	40 Sec.	6.3 V	0	0
2	105 Min.	6.3 V	30 mADC	0.2 vAC
3	15 Min.	0	0	0

Minimum life is defined as 500 hours of condition (2).

At the end of life, the following conditions must be met:

	Min.	Max.	
Heater Voltage	5.7	7.0	Volts
Heater Current	.54	.66	Amps
Anode Voltage	270	345	Volts dc
Anode Current	30	30	Ma
Power Output	0.80	---	Watts
FM Drive Voltage for 76 Mc Swing	.17	.48	Volts

■ Operation of heater with direct current will be necessary in most cases to avoid frequency modulation at alternating current supply frequency. A.C. operation may be satisfactory in some applications.

♦ Coil resistance is measured at ambient temperature of 25°C using maximum current of 25 ma.

§ Special vibration problems encountered with the WL-6177 should be referred to the nearest Westinghouse Electronic Tube salesman or Westinghouse Electronic Tube Division, Elmira, N. Y.

★ The FM drive voltage for peak to peak bandwidth of 84 and 42 mc is obtained. On a plot of bandwidth vs. drive voltage, a reference line is drawn through the origin and the 84 mc point. At the 42 mc drive voltage, the difference between the actual bandwidth and that indicated by the reference line is obtained. The ratio of this difference to 42 mc is less than .15.

OPERATING RECOMMENDATIONS

Maximum Ratings:

The maximum ratings given must not be exceeded if performance characteristics are to be maintained. It does not necessarily follow that all maximum ratings can be applied simultaneously.

Magnetic Field Precautions:

The operation of the tube can be affected if brought within strong AC field regions. Ferromagnetic materials should not be used for mounting brackets. Magnets should be kept at least one inch from the tube. Turning screws in either end cover of the tube can affect the magnetic field and make the tube inoperative.

Handling Precautions:

This tube is exceptionally rugged, and can be handled in normal procedures without particular precaution except that the output section can be bent. Care should be taken when connecting and disconnecting the output section to avoid undue transverse strain.

Thermal Stabilization:

Anode voltage-current relationships may vary for the first twenty minutes of operation. During this interval the frequency will show a drift of about 3 mc. After twenty minutes, the frequency shift is negligible.

Reed Modulator:

The modulation is achieved by an electro-mechanical modulator which capacitively tunes the resonant structure. The modulator is a vibrating reed, carrying two coils, so located in the magnetic field that one coil serves as a motor to drive the reed, and the second coil provides a feed-back voltage. This feed-back voltage, which can be used through an external amplifier for control of reed amplitude, is a function of reed frequency, and is made up of two components, one due to motion, the second due to induction. The ratio of feed-back voltage to drive voltage, expressed in db, is plotted against reed frequency in CE-A1337.

The particular technique by which the reed modulator is constructed minimizes the probability of damage by accidental over voltage. In typical applications this construction is immune to damage from overvoltages which may occur during adjustment of the equipment.

F M FEEDBACK VOLTAGE CHARACTERISTICS

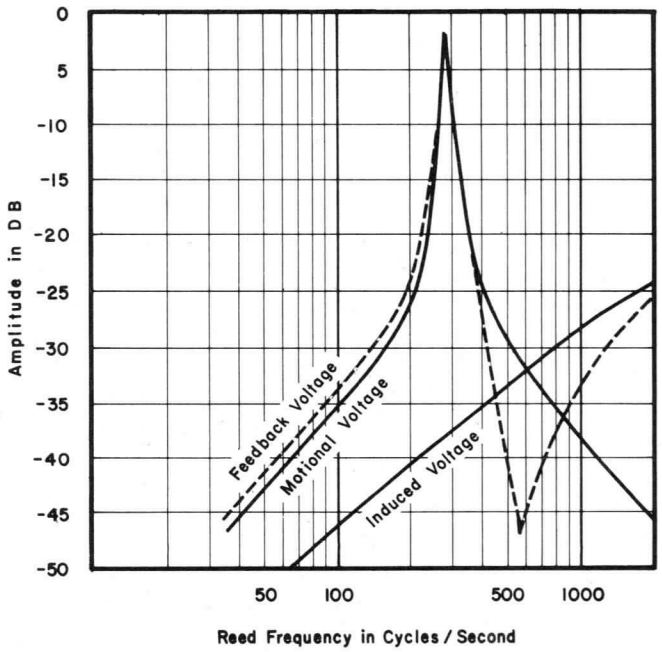

CE-A1337

CIRCUIT APPLICATIONS

The WL-6177 was designed for service in an electronic altimeter using the shift in frequency between the instantaneous transmitted and received signal as the distance determining parameter. This particular circuit uses a 60 mc peak-to-peak bandwidth for its operation. Testing procedures indicate however that good linearity between peak-to-peak bandwidth and input driving voltage exists to approximately 85 mc bandwidth. Practical circuits can therefore be designed using bandwidths up to 85 mc peak-to-peak. Best operation of the WL-6177 results when the tube is frequency modulated by a signal frequency between 100 and 125 cycles/second.

The WL-6177 can be used in other applications requiring simple frequency modulation of extremely-high-frequencies such as telemetry, radar or communications. Requests for specific information in other proposed applications should be referred to the nearest Westinghouse Electronic Tube salesman or Westinghouse Electronic Tube Division, Elmira, N. Y.

PIN#	CONNECTION
1	DRIVE (+)
2	PICKUP (+)
3	PICKUP
4	DRIVE (GROUND)
5	ANODE (GROUND)
6	HEATER
7	CATHODE
8	HEATER

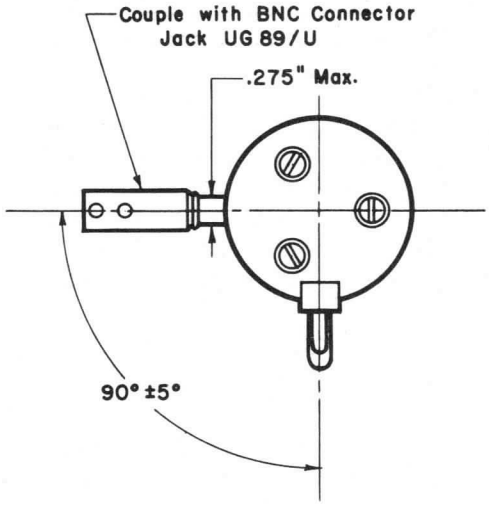

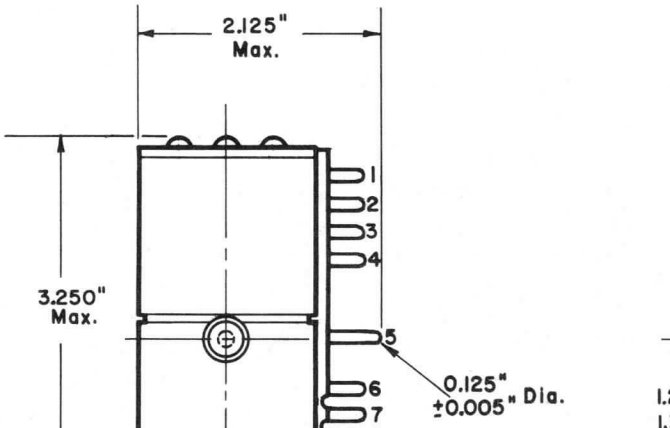

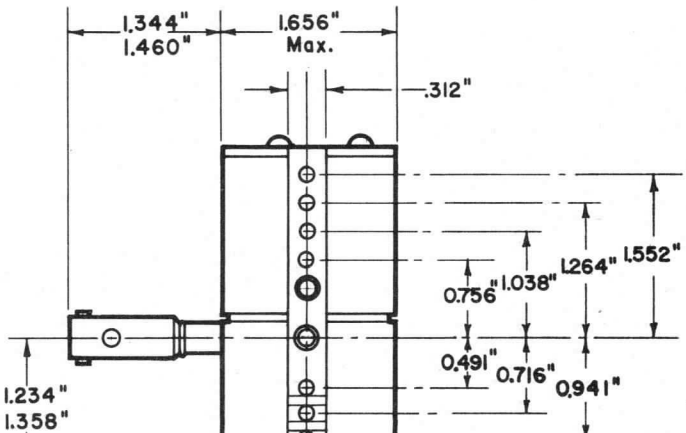

CE-81336

MAGNETRON TYPE WL-6177A

Fixed Frequency CW
Between 4268 and 4350 M.C.

One Watt Nominal
Power Output

Frequency Modulated 2%
Integral Magnets

The WL-6177A is a magnetron designed for continuous wave operation. It can be electro-mechanically frequency modulated about a single center frequency over a range of about two per cent.

Power output, when operating into a load with a VSWR of less than 1.1, is greater than one watt. Center frequency is between 4268 and 4350 megacycles. Peak to peak frequency deviation from zero to 85 megacycles is practical. Structurally, the WL-6177A employs a double strapped, vaned anode structure, and an oxide coated cathode. This cathode has been produced by special techniques to insure high surface density and smoothness, with ability to withstand the conditions of oscillation. The folded heater is rigidly supported by the cathode sleeve. R. F. power is delivered through a standard coaxial BNC female connector. D. C. and control voltages are applied to a terminal strip through eight pins in a straight line.

The magnetic field is produced by two permanent magnets encased with the tube in a steel shell which acts as an effective magnetic shield, except for very strong alternating fields.

ELECTRICAL:		
Cathode	Coated Unipotential	
Heater:		
Voltage■	6.3	dc Volts
Current	0.6 ± 10%	Ampere
Heating Time (Minimum)	40	Seconds
Reed Drive Coil Resistance♦	0.3 to 0.4	Ohms
Reed Pick-Up Coil Resistance♦	0.55 to 0.7	Ohms
Anode at Ground Potential		
MECHANICAL:		
Max. Overall Length	3.250	Inches
Max. Diameter (Excluding Terminals)	1.656	Inches
Connectors:		
Output	BNC Connector Jack JAN UG-89/U	
Operating Voltages	Special 8-Pin In-Line Socket	
Cooling	Unrestricted Air Convection	
Ambient Temperature	-55 to +70	°C
Shell Temperature	25° C above Ambient	
Vibration: §		
Frequency	25	Cycles
Amplitude	0.080	Inches
Net Weight	1	Pound
Shipping Weight	2	Pounds

Operating Position . . . . . The tube may be operated in any position. The connectors do not provide mechanical support. Non-magnetic clamps should be used to support the shell. Operation in positions other than base horizontal may shift center frequency by maximum of 0.1%.

TYPICAL OPERATION: CONTINUOUS WAVE OSCILLATOR

Load Voltage-Standing-Wave-Ratio 1.1 Max.

	Min.	Typical	Max.	
Heater Voltage ■	5.7	6.3	7.0	Volts
Heater Current	.54	.60	.66	Amps
Anode Voltage	280	315	330	Volts
Anode Current	--	30	--	Ma
Power Output	1.0	1.5	--	Watts
Frequency	4268	4300	4350	Megacycles
Pulling Figure for VSWR of 1.5	--	--	4.0	

TYPICAL OPERATION: FREQUENCY MODULATED OSCILLATOR

Load Voltage-Standing-Wave-Ratio 1.15 Max.

Heater Voltage ■	5.7	6.3	7.0	Volts
Heater Current	.54	.63	.66	Amps
Anode Voltage	280	315	330	Volts
Anode Current	--	30	--	Ma
Power Output	1.0	1.5	--	Watts
FM Drive Voltage for 76 Mc Swing	.15	.30	.35	Volts
FM Drive Voltage Frequency	60	100	125	Cycles/Sec.
Bandwidth Linearity ★	--	.05	.15	

LIFE TEST:

With the tube operating as a continuous wave oscillator, a 60 cycle per second signal of 0.2 Vac is applied to the reed drive coil. The pickup coil is open circuited. Voltages are cycled in the following manner:

Condition	Duration	Ef	Ib	E Drive
1	40 Sec.	6.3 V	0	0
2	105 Min.	6.3 V	30 mADC	0.2 vAC
3	15 Min.	0	0	0

Minimum life is defined as 1000 hours of condition (2).

At the end of life, the following conditions must be met:

	Min.	Max.	
Heater Voltage	5.7	7.0	Volts
Heater Current	.54	.66	Amps
Anode Voltage	270	330	Volts dc
Anode Current	30	30	Ma
Power Output	0.80	---	Watts

■ Operation of heater with direct current will be necessary in most cases to avoid frequency modulation at alternating current supply frequency. A.C. operation may be satisfactory in some applications.

♦ Coil resistance is measured at ambient temperature of 25°C using maximum current of 25 ma.

§ Special vibration problems encountered with the WL-6177A should be referred to the nearest Westinghouse Electronic Tube salesman or Westinghouse Electronic Tube Division, Elmira, N. Y.

★ The FM drive voltage for peak to peak bandwidth of 84 and 42 mc is obtained. On a plot of bandwidth vs. drive voltage, a reference line is drawn through the origin and the 84 mc point. At the 42 mc drive voltage, the difference between the actual bandwidth and that indicated by the reference line is obtained. The ratio of this difference to 42 mc is less than .15.

OPERATING RECOMMENDATIONS

Maximum Ratings:

The maximum ratings given must not be exceeded if performance characteristics are to be maintained. It does not necessarily follow that all maximum ratings can be applied simultaneously.

Magnetic Field Precautions:

The operation of the tube can be affected if brought within strong AC field regions. Ferromagnetic materials should not be used for mounting brackets. Magnets should be kept at least one inch from the tube. Turning screws in either end cover of the tube can affect the magnetic field and make the tube inoperative.

Handling Precautions:

This tube is exceptionally rugged, and can be handled in normal procedures without particular precaution except that the output section can be bent. Care should be taken when connecting and disconnecting the output section to avoid undue transverse strain.

Thermal Stabilization:

Anode voltage-current relationships may vary for the first twenty minutes of operation. During this interval the frequency will show a drift of about 3 mc. After twenty minutes, the frequency shift is negligible.

Reed Modulator:

The modulation is achieved by an electro-mechanical modulator which capacitively tunes the resonant structure. The modulator is a vibrating reed, carrying two coils, so located in the magnetic field that one coil serves as a motor to drive the reed, and the second coil provides a feed-back voltage. This feed-back voltage, which can be used through an external amplifier for control of reed amplitude, is a function of reed frequency, and is made up of two components, one due to motion, the second due to induction. The ratio of feed-back voltage to drive voltage, expressed in db, is plotted against reed frequency in CE-A1337.

The particular technique by which the reed modulator is constructed minimizes the probability of damage by accidental over voltage. In typical applications this construction is immune to damage from overvoltages which may occur during adjustment of the equipment.

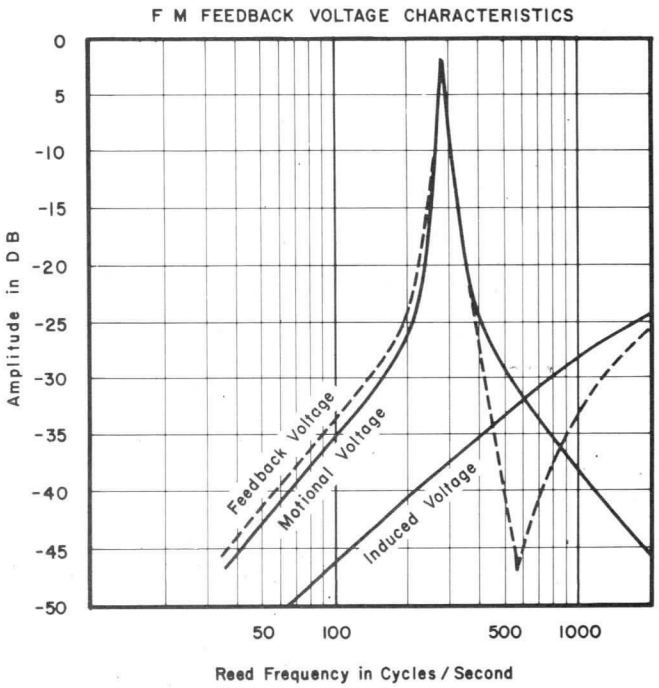

CE-A1337

CIRCUIT APPLICATIONS

The WL-6177A was designed for service in an electronic altimeter using the shift in frequency between the instantaneous transmitted and received signal as the distance determining parameter. This particular circuit uses a 60 mc peak-to-peak bandwidth for its operation. Testing procedures indicate however that good linearity between peak-to-peak bandwidth and input driving voltage exists to approximately 85 mc bandwidth. Practical circuits can therefore be designed using bandwidths up to 85 mc peak-to-peak. Best operation of theWL-6177Aresults when the tube is frequency modulated by a signal frequency between 100 and 125 cycles/second.

The WL-6177A can be used in other applications requiring simple frequency modulation of extremely-high-frequencies such as telemetry, radar or communications. Requests for specific information in other proposed applications should be referred to the nearest Westinghouse Electronic Tube salesman or Westinghouse Electronic Tube Division, Elmira, N. Y.

PIN#	CONNECTION
1	DRIVE (+)
2	PICKUP (+)
3	PICKUP
4	DRIVE (GROUND)
5	ANODE (GROUND)
6	HEATER
7	CATHODE
8	HEATER

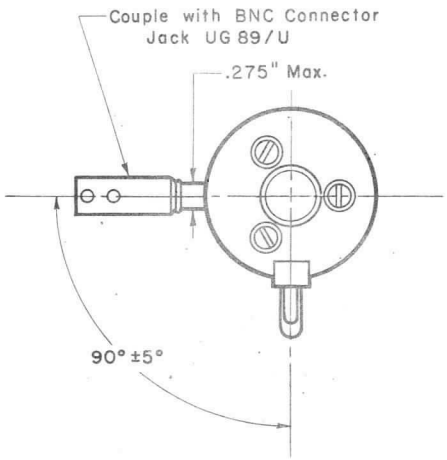

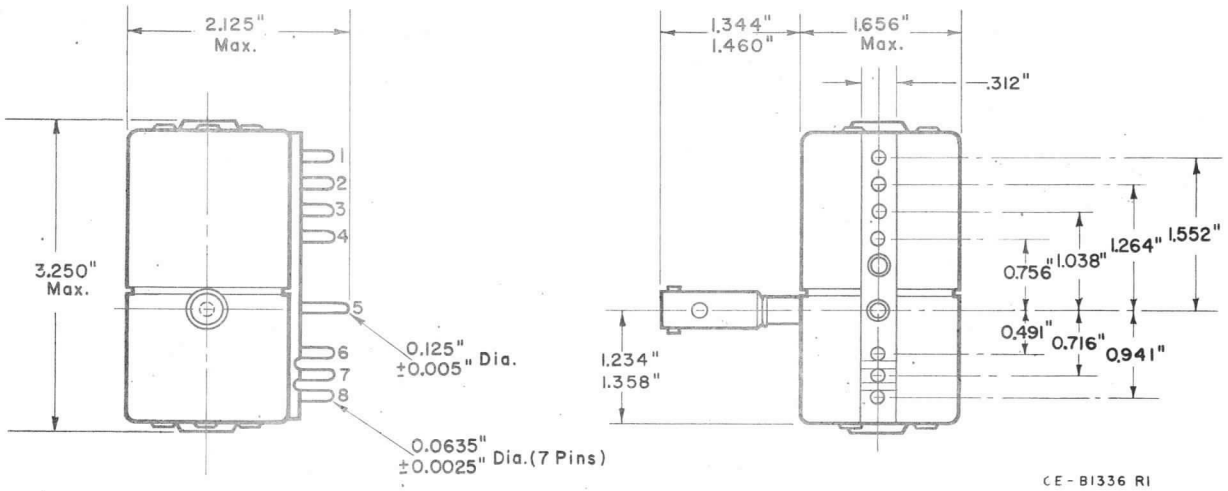

The information contained herein is supplied without assuming responsibility for infringement of patents or other rights of third parties which may result from its use. No license is granted by implication or otherwise under any patent or patent rights of Westinghouse Electric Corporation.

September 1, 1957

MAGNETRON TYPE WL-6249A

Tunable
8500-9600 M. C.

Forced Air Cooled
Integral Magnet

250 KW Peak
Power Output

The WL-6249A is a tunable X-band magnetron. It is designed to serve as a pulse oscillator at frequencies between 8500 and 9600 megacycles per second. Its tuner design makes it particularly suitable for applications requiring rapid tuning over its operating range.

The WL-6249A has a typical power output of approximately 250 kilowatts over its entire frequency range. Pulse widths up to 2.8 microseconds may be used. Thermal drift is typically 20 megacycles, even at the extremes of the frequency range. The WL-6249A provides good spectrum shape and excellent stability of operation.

Structurally the WL-6249A employs a modified hole and slot anode with a double strapped system. A crown-of-thorns tuner of proven reliability provides the tuning action. In order to insure a low arcing rate and long life, a thorium cermet cathode has been used. This cathode exhibits very low gas evolution and it contains an inhibitor to reduce anode contamination. The WL-6249A is rugged and has been operationally tested at vibration levels up to 5g's and at vibration frequencies up to 1500 cycles per second. The WL-6249A has a waveguide type output which is designed to couple to a modified UG-52A/U choke flange. The output may be pressurized, although no breakdown will occur if pressure is maintained at 1 atmosphere.

The WL-6249A tuner is designed for high speed motor drives. The tuning shaft may be driven at speeds up to 1500 r.p.m. allowing excursion of the frequency range in approximately 7 seconds. A calibrated dial and geneva provides a visual indication of tube frequency.

GENERAL DATA

ELECTRICAL:

Heater, for Unipotential Cathode:	
Voltage (ac)	9.0 V
Current at 9.0 V	Minimum 12.8 A Max. 15.6 A
Starting Current	Maximum instantaneous starting current must never exceed 2.5 times 15.6A or 39 amperes.
Minimum Cathode Heating Time	180 sec.
Frequency	8500-9600 mc.
Maximum Frequency Pulling at VSWR of 1.5	15 mc.

MECHANICAL:

Mounting Position	Any
Dimensions	See Outline Drawing
Air Flow:	
To fins	An air stream should be directed along the cooling fins toward the body of the tube. Adequate flow should be provided so that the temperature of the anode block does not exceed 125° C.
Cathode Bushing	Oil Immersed
Waveguide Output Flange	Mates with Modified JAN UG-52/U
Tuner	Calibrated, with shaft for motor drive ▲
Tuning Torque:	
Tube	1.5 in. lbs. max.
Equipment	12 in. lbs. max.
Shaft Speed	1500 r.p.m. max.
Tuner Backlash■(at 9150 mc)	10 megacycles max.
Lubrication †	.....
Pressurization of Output	15 psia (min.) 45 psia (max.)
Vibration §	
Weight (Approx.)	16 pounds 4 ounces

PULSED OSCILLATOR SERVICE

MAXIMUM AND MINIMUM RATINGS:

	Min.	Max.	
Peak Anode Current		32	amp.
Peak Power Input		1000	KW
Duty		.0013	
Pulse Duration		2.8	us
Rate of Rise of Voltage Pulse	90	180	kv/usec
Anode Block Temperature		125	°C
Cathode Bushing Temperature		270	°C
Load Voltage Standing Wave Ratio		1.5	
Input Pulse Circuitry	A discharging network type pulser or other type which limits the fault power which could be applied to the magnetron to twice the normal pulse power must be used.		

TYPICAL OPERATION WITH LOAD VOLTAGE STANDING WAVE RATIO EQUAL TO OR LESS THAN 1.05 EXCEPT AS NOTED

OSCILLATION 1 WITH DUTY CYCLE OF .001

	Minimum	Typical	Maximum	
Heater Voltage♦		6.0		V
Peak Anode Voltage♦	27.0	28.0	29.0	kv
Peak Anode Current		25.0		amp.
Pulse Repetition Rate		2000		cps
Pulse Duration		.5		usec
RF Bandwidth with worst phasing of 1.5 VSWR.		2.5	5.0	Mc
Pulling Figure at VSWR of 1.5		10	15	Mc
Pushing Figure			.5	Mc/amp
Thermal Factor for any 25° range between 75°C and 125°C			.35	Mc/°C
Thermal Drift★		20	50	Mc
Thermal Drift Time		8	15	Min.
Stability (missing pulses)● with worst phasing of 1.5 VSWR		.01	.5	%
Peak Power Output	200	250		KW

OSCILLATION 2 WITH DUTY CYCLE OF .001

	Minimum	Typical	Maximum	
Heater Voltage♦		6.0		
Peak Anode Voltage♦	27.0	28.0	29.0	kv
Peak Anode Current		25.0		amp.
Pulse Repetition Rate		400		cps
Pulse Duration		2.5		usec
RF Bandwidth with worst phasing of 1.5 VSWR.		1.0	1.5	Mc
Pulling Figure at VSWR of 1.5		10	15	Mc
Pushing Figure			.5	Mc/amp
Thermal Factor for any 25° range between 75°C and 125°C			.35	Mc/°C
Thermal Drift★		20	50	Mc
Thermal Drift Time		8	15	Min.
Stability (missing pulses)● with worst phasing of 1.5 VSWR		.1	.5	%
Peak Power Output	200	250		KW

LIFE TEST

LIFE TEST CYCLE□	125	Cycles
Filament Warmup	3	Min.
Oscillation 1	60	Min.
Oscillation 2	60	Min.
Non Operational	57	Min.

LIFE TEST FAILURE CRITERIA (OSCILLATION 2 CONDITIONS)

Power	160	KW min.
Bandwidth	2.0	Mc Max.
Stability	1.0	% Missing Pulses

NOTES

▲ Connection to the shaft should be through a flexible coupling. Any connection to the shaft that tends to introduce an axial or radial thrust may reduce the usuable life of the tuner.

■ Backlash is defined as the difference in frequency when a given dial setting is approached in either direction of rotation.

† The WL-6249A is factory lubricated and should not require further lubrication. Care should be exercised to keep foreign particles out of the exposed portions of the tuner mechanism. Should further lubrication be desired, Dow Corning Silicone No. 33 Grease should be used on the worm and "Lockease" Colloidal Graphite oil on the shaft bearings.

§ Special vibration problems encountered with the WL-6249A should be referred to the Microwave Engineering Dept. WEC, Elmira, New York. The WL-6249A has been operationally tested at vibration levels up to 5 g's with vibration frequencies up to 1500 cycles per second.

♦ Heater voltage should be 6.0 volts ± 10% for maximum life at .001 duty. Higher voltages are permissable but may result in short life. For the following condition, heater voltage should be 8.0 V ± 10%:

tp = .45 to .55 us
Du = .0005
Lb = 14 mAdc

♦ This represents the range of production at 9000 mc. See curves for other frequencies.

★ Thermal Drift is the change in frequency from the start of oscillation at 9375 mc until thermal equilibrium has been reached.

● A pulse is considered missing if its amplitude is less than 70% of a normal pulse.

□ Frequency is varied during life test in 100 Mc steps every 8 hours from 8500 to 9600 Mc. The waveguide load is set at a VSWR of 1.5 (min.) and varied continuously through all phases every 15 minutes.

OPERATING RECOMMENDATIONS

MAXIMUM RATINGS:

The maximum ratings given in the data must not be exceeded if the listed performance characteristics are to be realized. The equipment manufacturer must take due precaution to insure that these limits are not exceeded by equipment tolerances or by possible supply voltage variations.

HIGH VOLTAGE PRECAUTIONS:

The high voltage at which the WL-6249A operates is dangerous to life. Care should be taken to prevent contact of personnel with the high voltage terminals of the tube. The usual method of protecting the personnel is to fasten the tube mounting plate to a grounded metal container large enough to allow insulating space around the cathode bushing. Connections are made to the cathode terminals inside this container and the space around the terminals is filled with an insulating fluid. The magnetron anode is also grounded to the container. It is necessary that a low impedance connection exists between the equipment and the mounting plate and anode for proper operation and satisfactory performance.

MAGNETIC FIELD PRECAUTIONS:

The WL-6249A is supplied with integral magnets which are factory adjusted to provide proper operation. It is important, therefore, that no magnets or magnetic materials be brought within 4 inches of the tube to prevent demagnetization of the tube magnets.

HANDLING PRECAUTIONS:

The 6249A should be protected against shock when it is handled. The tube is normally supplied with a guard, to protect the cathode bushing, which is removed when the tube is installed. A polyethylene bag is placed over the tuner to prevent dust and other particles from collecting in the gear mechanism. This too must be removed for operation. A dust cover is also provided to keep particles out of the waveguide system as the entrance of particles into the output section will cause arcing and could result in tube destruction.

MOUNTING DIRECTIONS:

The WL-6249A should be mounted with its weight supported by its mounting flange. The surface should be flat and provide adequate clearance for the cathode. The waveguide output is designed to mate with a modified JAN UG-52A/U flange. The UG-52A/U flange is modified by enlarging the threaded holes to allow entry of 8-32 screws. It is preferable that the waveguide include a flexible section where it is joined to the tube to prevent distortion of the tube output. Before connecting the output to the waveguide, the user should check the window to insure its freedom from dust which could cause arcing.

COOLING:

An air blast should be provided across the fins. This air should be directed to the fins by an appropriate flexible boot for best cooling efficiency. An air flow of 35 CFM at a pressure of 2.0 inches of water should be adequate to maintain the anode temperature below the maximum of 125°C rating. Anode temperature should be measured by contacting the output sleeve 1.5 inches from the face of the waveguide flange. Care should be taken to insure positive contact with the thermocouple. It is usually necessary to scrape a small bit of paint from the magnetron for this measurement.

STARTING:

When starting a tube for the first time, a heater voltage of 9.0 volts should be applied for 3 minutes. Care must be taken to limit the starting surge surge current to 39 amperes max. Normal heater current at this voltage is between 12.8 and 15.6 amperes. This will allow the cathode to reach operating temperature and the getter to become operative. Pulse power in the form of negative pulses may then be applied to the cathode. If instability due to arcing occurs, it may be necessary to season the tube at the full 9.0 volts on the heater and to operate at reduced power for 10 minutes. Normally the heater should be reduced to 6.0 volts immediately after application of full rated operating voltages. When operating conditions are reached, back bombardment of the cathode occurs which tends to raise the cathode temperature, necessitating the reduction in heater voltage. The heater should be protected from the pulse power by placing a suitable capacitor across the heater terminals. The cathode terminal may be identified by the red marking on the lug. It is important to attach the anode circuit return to this terminal to prevent heater burn-out.

TYPICAL FREQUENCY DRIFT CHARACTERISTICS
FROM COLD START

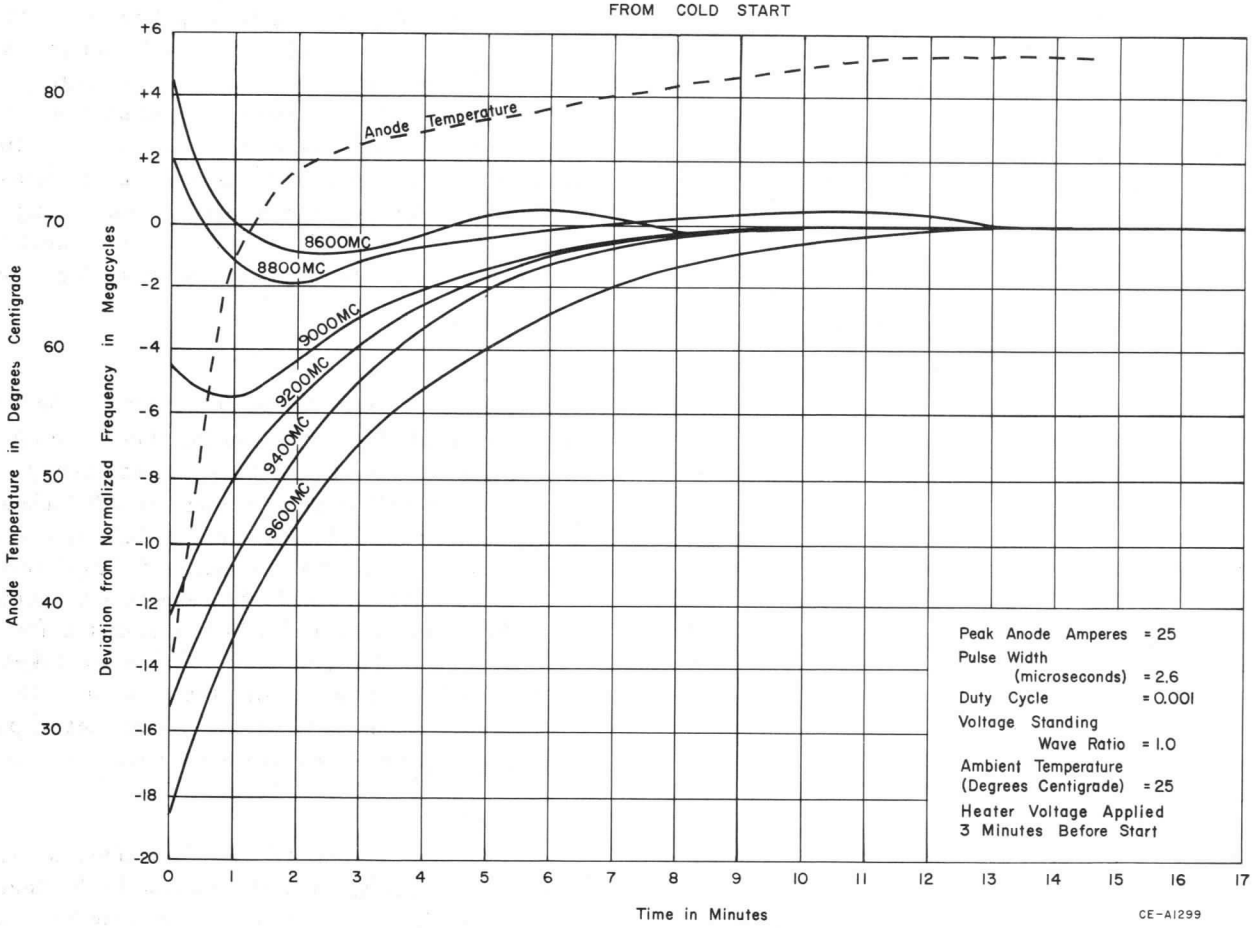

THERMAL STABILIZATION:

As the anode block warms up, the cavities increase in size, causing a drop in frequency. At higher frequencies with the crown-of-thorns tuner inserted into the cavities, the pins heat up. This causes an expansion of the tuner which raises frequency. This is the dominant effect. The WL-6249A is designed to reach equilibrium as quickly as possible consistent with these opposing phenomena. The time required for stabilization is shown in CE-A 1299.

VOLTAGE AND CURRENT WAVEFORMS
SHOWN IN TIME PHASE

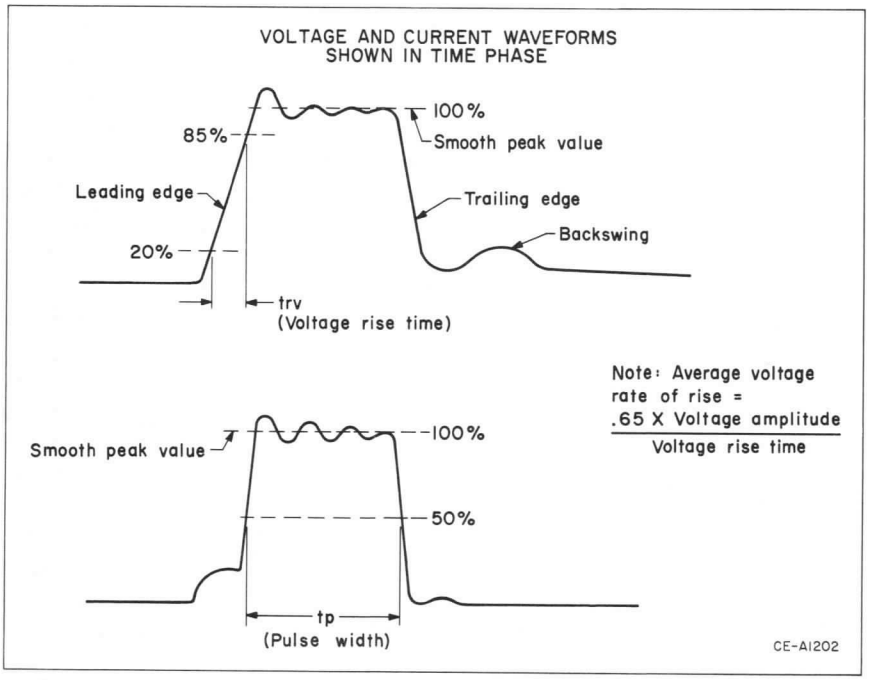

EQUIPMENT:

For best operation of the WL-6249A, it is important that the voltage and current pulses be

carefully shaped. The voltage rise times indicated in the data must be rigorously adhered to. The current and voltage pulses appear in time phase in CE-A1202. The pulse width is determined by the width of the current pulse at the 50% amplitude level. Measurement of pulse width using the r-f envelope is not recommended. The ripple on the top of the current pulse should have a peak to peak amplitude less than 10 percent of the smooth peak value. A sloping pulse is also objectionable. Either of these conditions will result in poor spectra especially under 2.5 microsecond operation. The trailing edge is of less importance but it can contribute to poor spectra if excessive. The backswing should be maintained at a level low enough to prevent the tube from breaking back into oscillation again. This could result in increased system noise. The proper measurement of the voltage and current pulses is very important. It is not sufficient to measure the voltage pulse alone since a magnetron tends to be a constant voltage device and will appear to smooth out an otherwise poor pulse. A modulator is shown schematically in CE-A 1203 with location of voltage and current viewers indicated. A suitable voltage viewer is a capacitor divider having a shunt capacity of about 6 micromicrofarads shielded as shown in CE-A 1301.

TYPICAL PULSE CIRCUITRY FOR WL-6249A
INCLUDING WAVEFORM VIEWING COMPONENTS

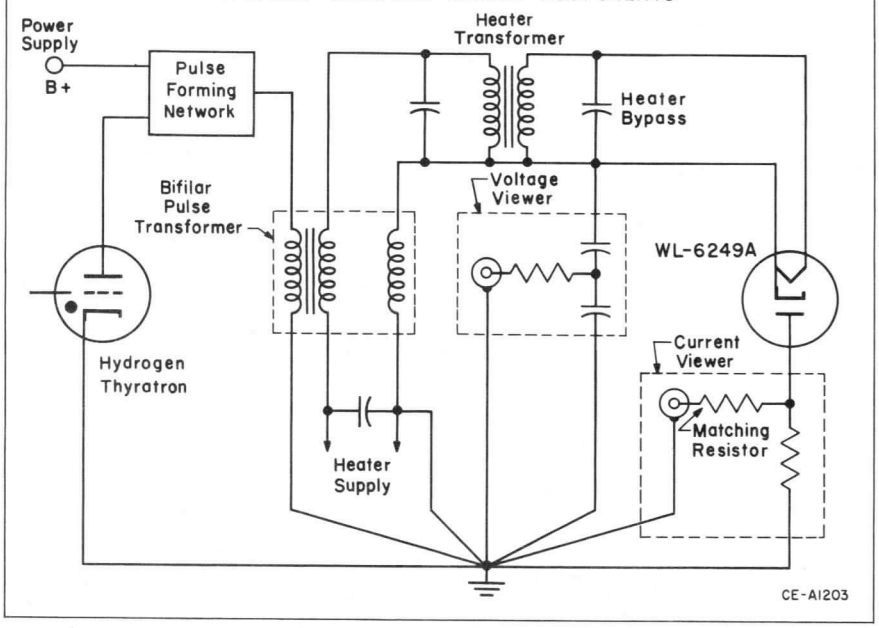

For current viewing, a resistor with a value of about 2.5 ohms should be used. It should consist of a number of carbon resistors mounted radially as shown in CE-A 1302. Best results are obtained if these pulses are fed directly to the deflection plates of an oscilloscope.

The WL-6249A should be operated with a well matched load. Tube life and reliability will be increased if the line is well matched. As shown in the data, a maximum VSWR of 1.5 is permitted. Under these conditions a life of 250 anode hours minimum may be expected. Typical life is considerably longer. Operation of the WL-6249A under

VOLTAGE VIEWER IN CROSS SECTION

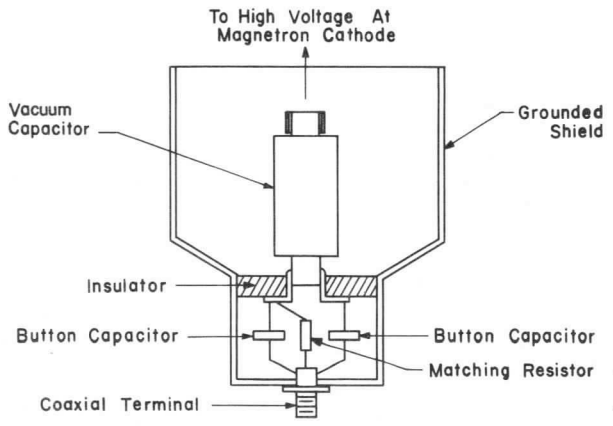

CURRENT VIEWER IN CROSS SECTION

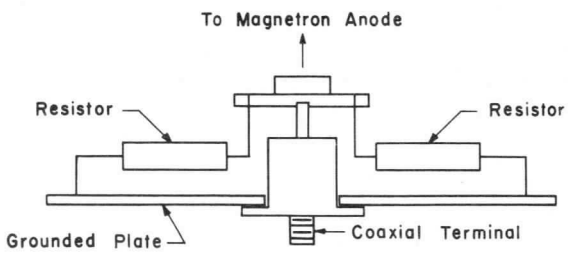

Note: Matching resistor equivalent to Tektronix #B52-R must be used in line to oscilloscope.

a mismatch can be best seen by referring to the Rieke diagrams shown in CE-B 1303 and CE-B 1304. The area of highest power is called the "sink" and represents the highest coupling to the magnetron. Under these conditions the r-f spectrum will tend to broaden. This is especially true at 2.5

RIEKE DIAGRAM

Peak Kilovolts = 28.5
Peak Anode Amperes = 25
Pulse Duration
(microseconds) = 2.6
Duty = 0.001
Frequency (megacycles) = 8750

REFERENCE POINT:
MAGNETRON FLANGE

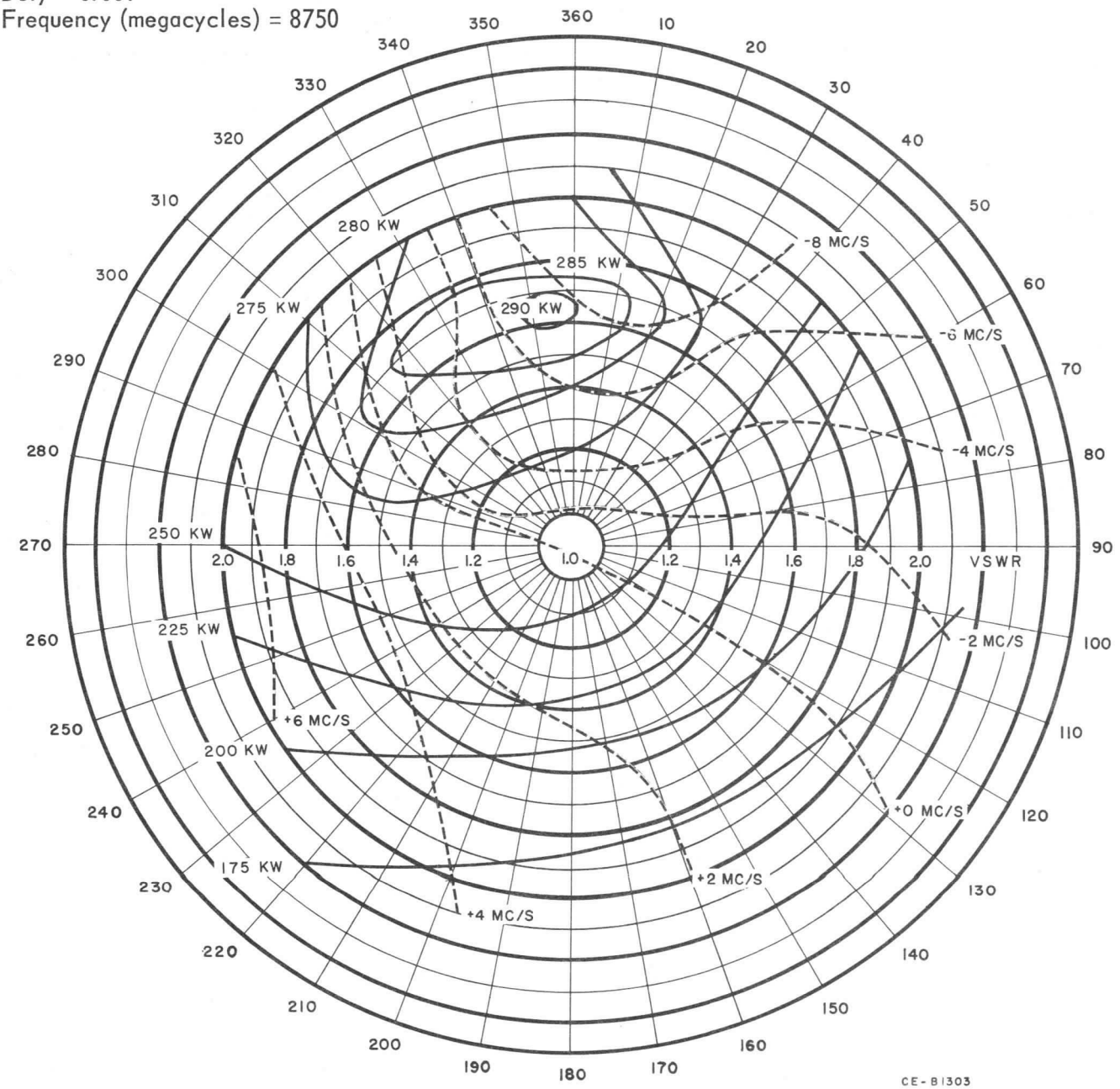

microsecond operation. When the phase of the VSWR is changed to move the operation into the low power region (anti sink) the magnetron may tend to show signs of instability. This may take the form of arcing and an increase in missing pulses. This results because the magnetron has been un-

RIEKE DIAGRAM

Peak Kilovolts = 29.7
Peak Anode Amperes = 25
Pulse Duration
(microseconds) = 2.6
Duty = 0.001
Frequency (megacycles) = 9375

REFERENCE POINT:
MAGNETRON FLANGE

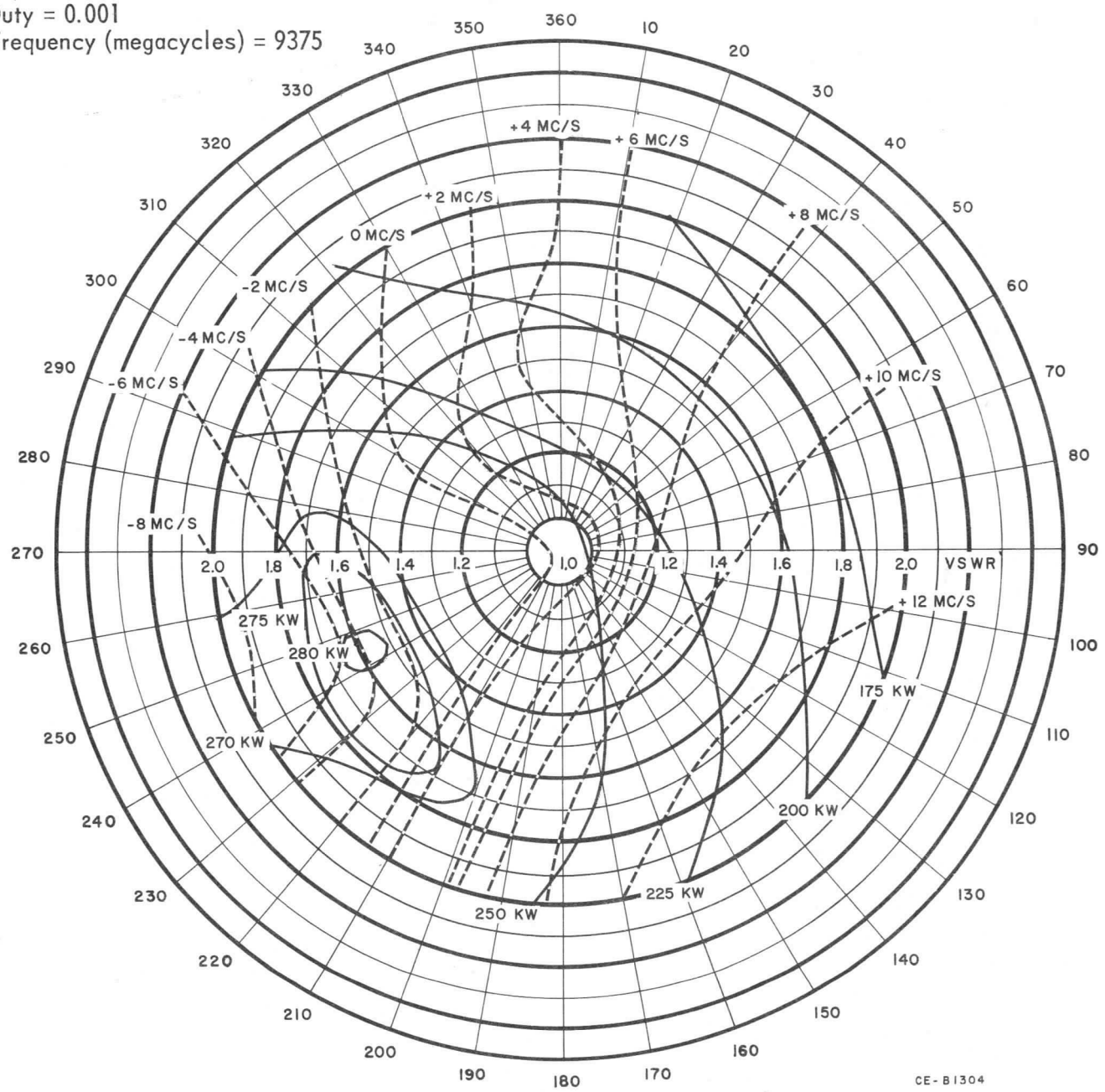

loaded and the r-f voltages inside the magnetron are increased, making internal r-f discharges more likely.

A second problem encountered with tunable magnetrons involves the distance between the mismatch and the tube flange. This is known as the "long lines" effect and is an additional limit on the VSWR that is permitted in the load as shown in CE-A 1305. If the load presents a high VSWR at a sufficient distance from the tube, discontinuities in the magnetron tuning characteristic may result. This can be avoided by using a short system or by keeping the VSWR low. The use of a ferrite isolator with the WL-6249A provides a convenient solution of the problem.

PERFORMANCE:

Typical performance charts for the WL-6249A are shown in CE-C 1306. The volt-ampere characteristics of the tube are shown with power output indicated with circles. The curves vary depending on the condition of the load and the tube frequency.

TUNING:

The WL-6249A is particularly well suited for rapid tuning with motor drive systems. Tuning is accomplished by rotating a worm shaft which moves a calibrated gear. The calibrations on the gear, together with a geneva mechanism give an indication of the magnetron frequency. The gear drives the crown-of-thorns tuner through a carefully constructed thread drive. Speeds up to 1500 R.P.M. are permitted on the shaft which allow excursion of the frequency band (8500 to 9600 M.C. in approximately 7 seconds. No appreciable wear should be expected in 5000 complete excursions (8500 to 9600 M.C. and return) at the highest speed permitted.

RECOMMENDED OPERATING REGION

For WL-6249A in RG-51/U Waveguide

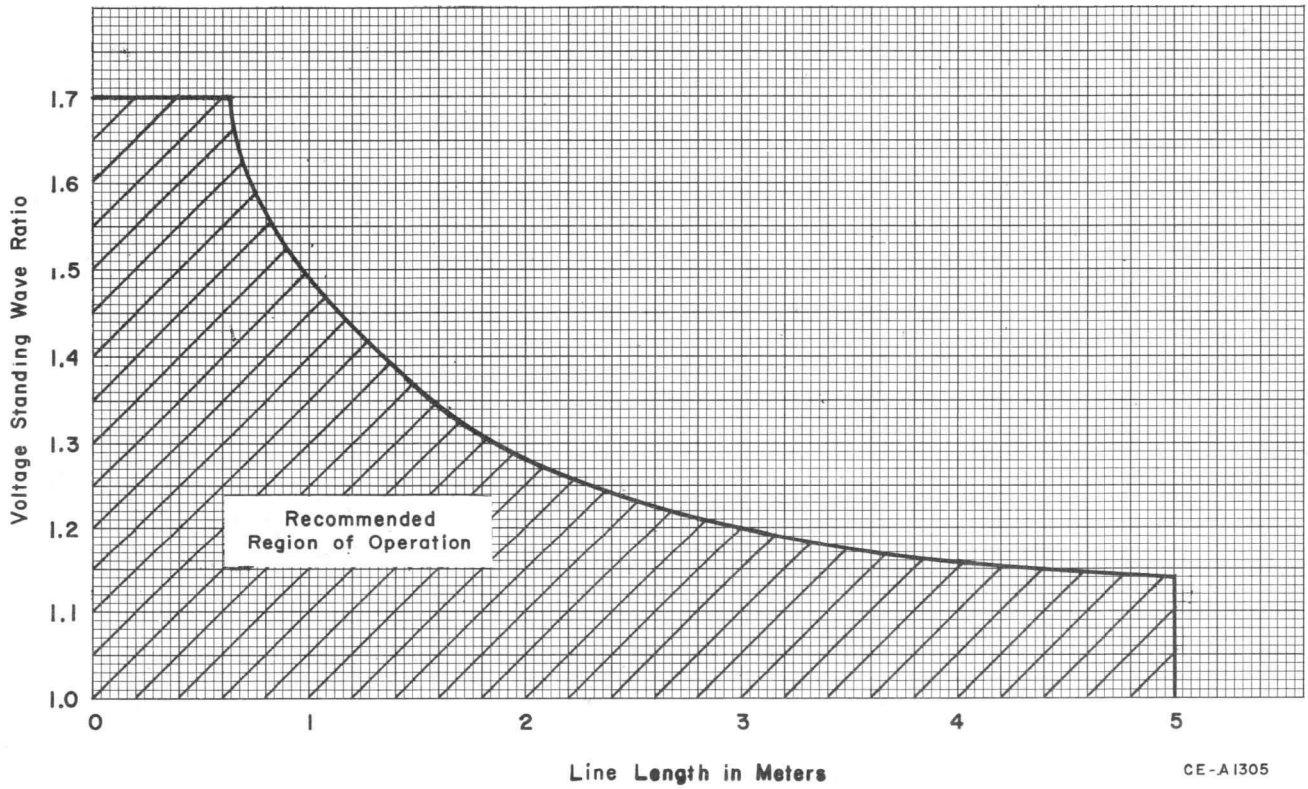

PERFORMANCE CHART DATA
FOR
WL-6249A

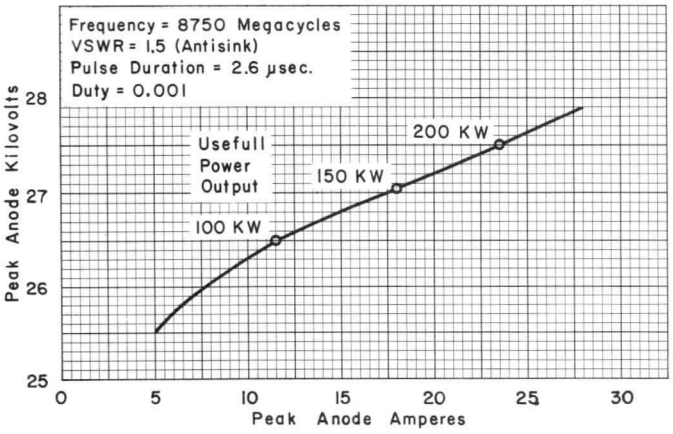

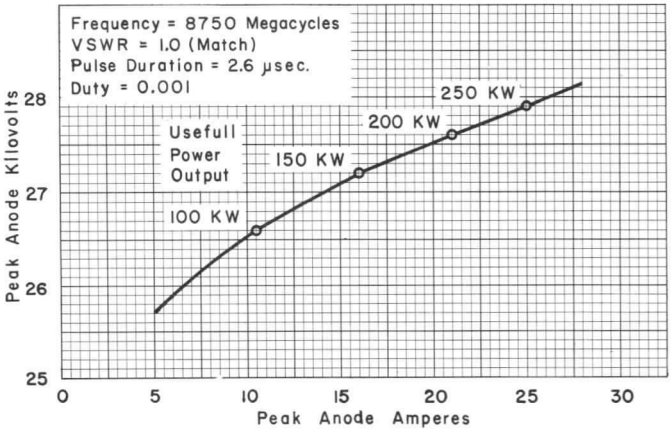

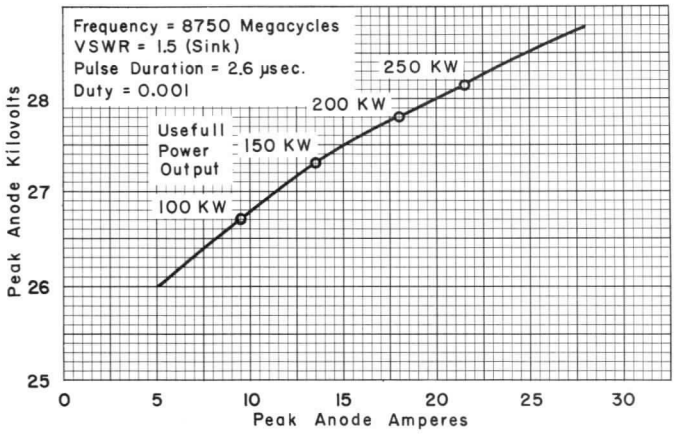

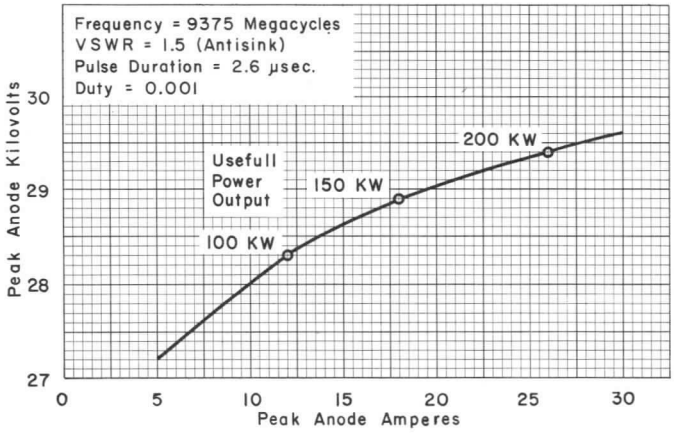

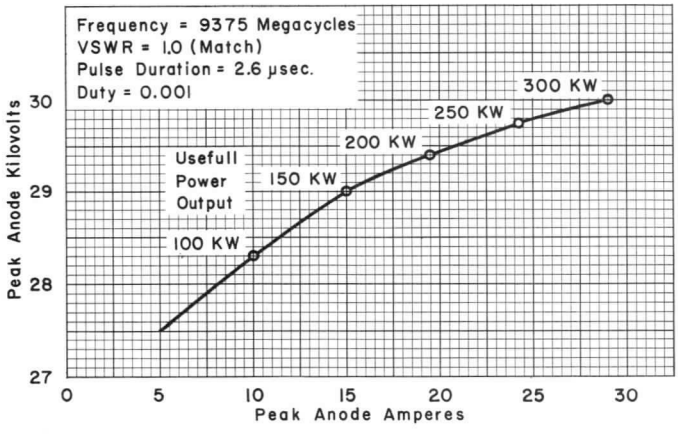

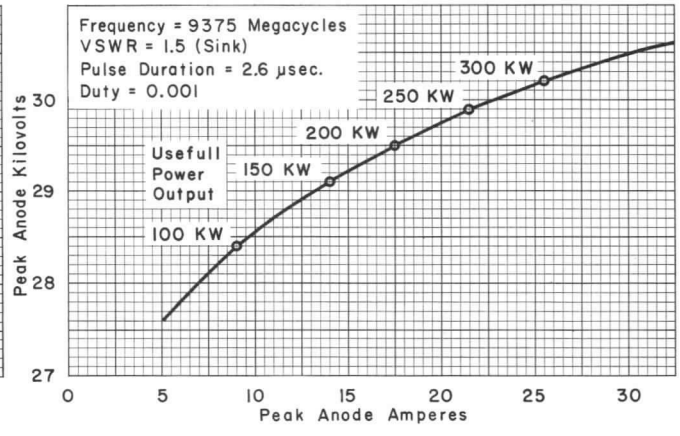

CE-C1306

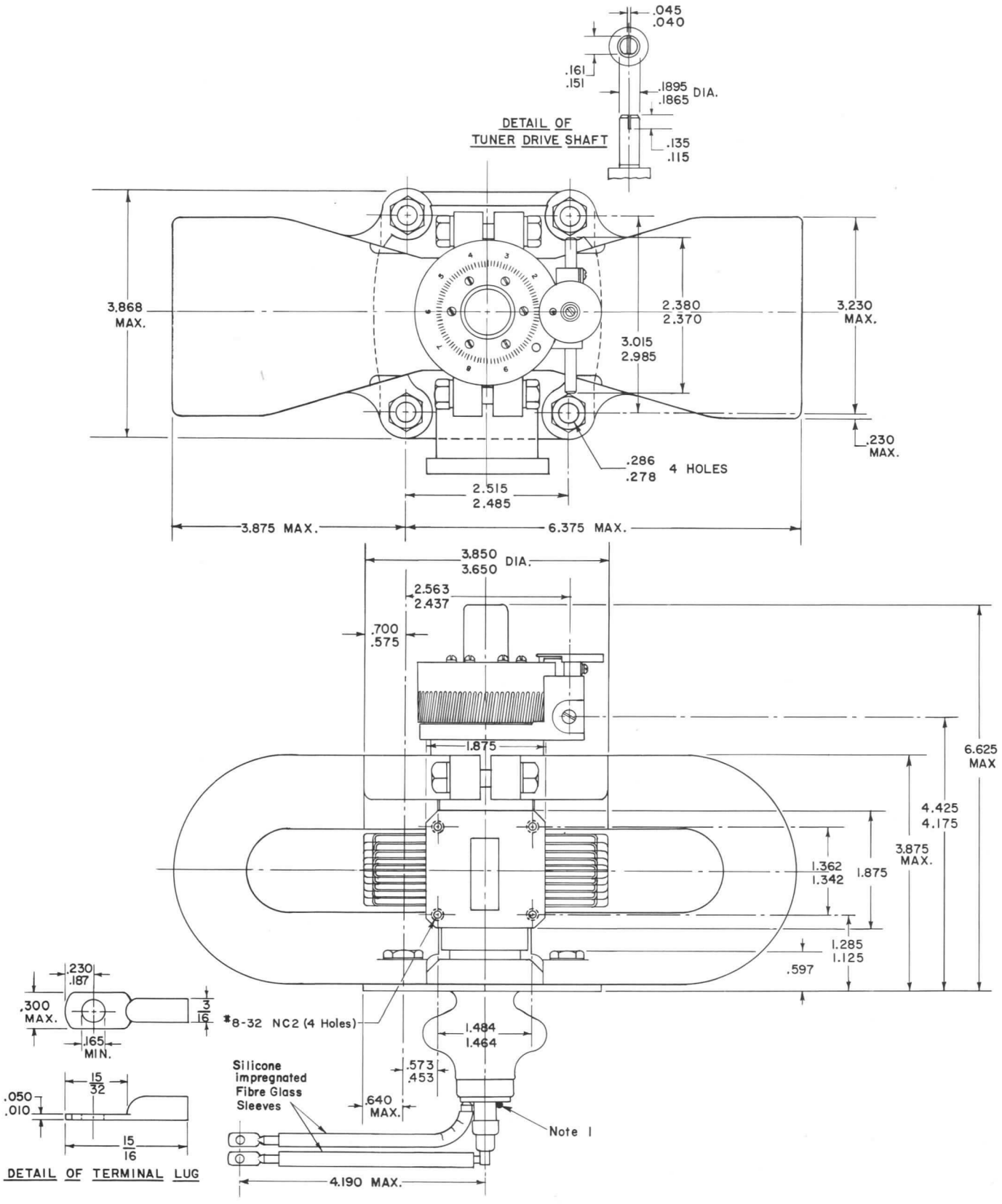
.045
.040
.161
.151
.1895
.1865 DIA.
DETAIL OF
TUNER DRIVE SHAFT
.135
.115
3.868
MAX.
2.380
2.370
3.230
MAX.
3.015
2.985
.230
MAX.
.286
.278 4 HOLES
2.515
2.485
3.875 MAX.
6.375 MAX.
3.850
3.650 DIA.
2.563
2.437
.700
.575
1.875
6.625
MAX
4.425
4.175
3.875
MAX.
1.362
1.342
1.875
1.285
1.125
.597
.230
.187
.300
MAX.
3/16
.165
MIN.
*8-32 NC2 (4 Holes)
1.484
1.464
.573
.453
.640
MAX.
Silicone
impregnated
Fibre Glass
Sleeves
Note 1
4.190 MAX.
15/32
.050
.010
15/16
DETAIL OF TERMINAL LUG

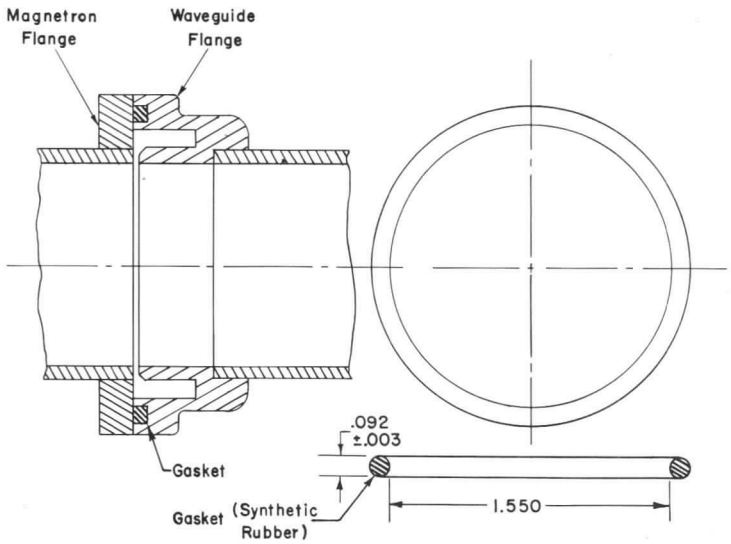

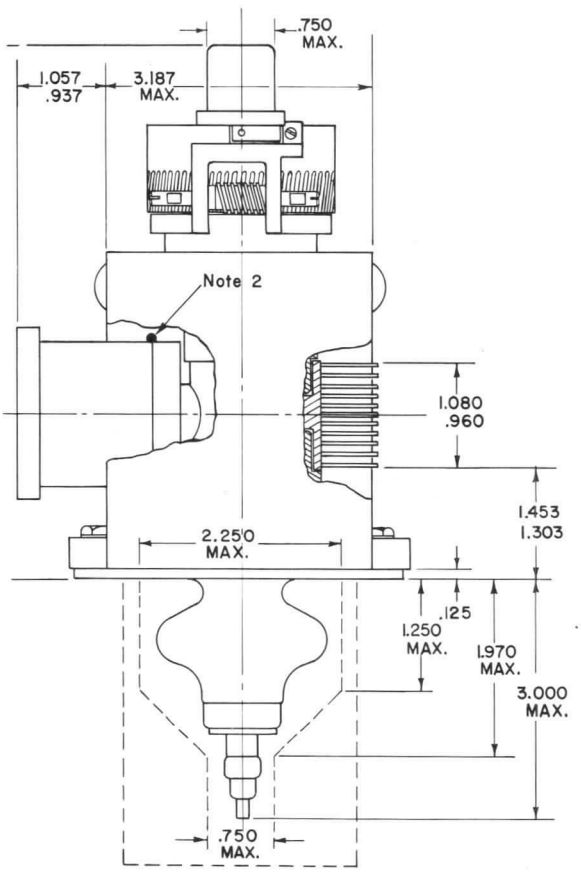

NOTE 1: Cathode bushing temperature should be measured at this point.

NOTE 2: Anode temperature should be measured at this point on surface of waveguide 1.500 inch from face of waveguide flange.

NOTE 3: Brown paint on terminal identifies the lead common to heater and cathode.

NOTE 4: Operating frequency increases as the tuner shaft is rotated in a counterclockwise direction as viewed from waveguide side of tube. Approximately 75 revolutions of the tuner shaft are required to tune from 8500 to 9600 megacycles.

TYPICAL OPERATING CHARACTERISTICS

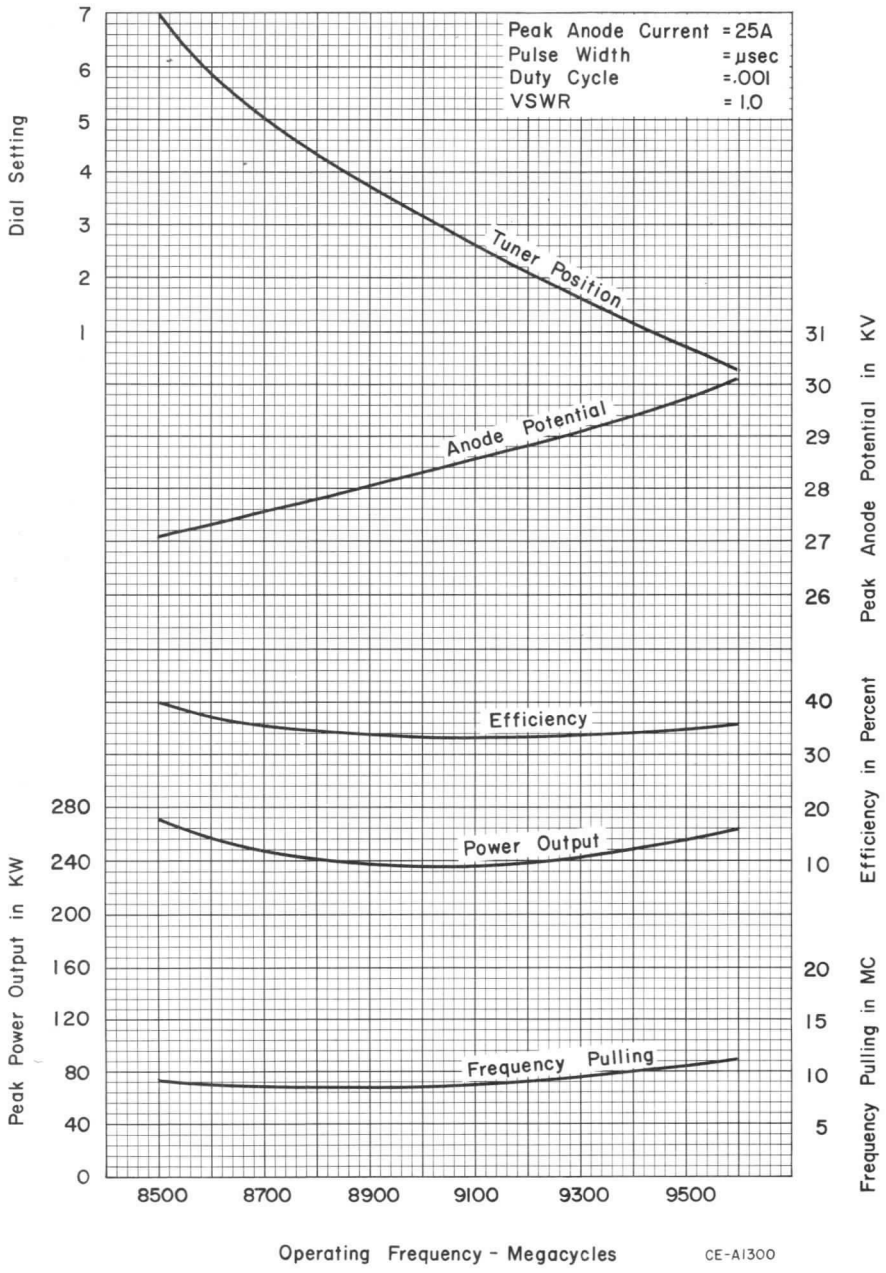

Westinghouse

6249B

June 15, 1960

£202 in Canada. (April 63)
MM.

MAGNETRON TYPE 6249B

Tunable
8500-9600 M. C.

Forced Air Cooled
Integral Magnet

250 KW Peak
Power Output

The 6249B is a tunable X-band magnetron. It is designed to serve as a pulse oscillator at frequencies between 8500 and 9600 megacycles per second. Its tuner design makes it particularly suitable for applications requiring rapid tuning over its operating range.

The 6249B has a typical power output of approximately 250 kilowatts over its entire frequency range. Pulse widths up to 3.3 microseconds may be used. Thermal drift is typically 20 megacycles, even at the extremes of the frequency range. The 6249B provides good spectrum shape and excellent stability of operation.

Structurally the 6249B employs a modified hole and slot anode with a double strapped system. A crown-of-thorns tuner of proven reliability provides the tuning action. In order to insure a low arcing rate and long life, a thorium cermet cathode has been used. This cathode exhibits very low gas evolution and it contains an inhibitor to reduce anode contamination. The 6249B is rugged and has been operationally tested at vibration levels up to 5g's and at vibration frequencies up to 1500 cycles per second. The 6249B has a waveguide type output which is designed to couple to a modified UG-52A/U choke flange. The output may be pressurized, although no breakdown will occur if pressure is maintained at 1 atmosphere.

The 6249B tuner is designed for high speed motor drives. The tuning shaft may be driven at speeds up to 1500 r.p.m. allowing excursion of the frequency range in approximately 7 seconds. A calibrated dial and geneva provides a visual indication of tube frequency.

GENERAL DATA

ELECTRICAL:

Heater, for Unipotential Cathode:	
Voltage (ac)	9.0 V
Current at 9.0 V	Minimum 12.8 A Max. 15.6 A
Starting Current	Maximum instantaneous starting current must never exceed 2.5 times 15.6A or 39 amperes.
Minimum Cathode Heating Time	180 sec.
Frequency	8500-9600 mc.
Maximum Frequency Pulling at VSWR of 1.5	15 mc.

MECHANICAL:

Mounting Position	Any
Dimensions	See Outline Drawing
Air Flow:	
To fins	An air stream should be directed along the cooling fins toward the body of the tube. Adequate flow should be provided so that the temperature of the anode block does not exceed 125° C.
Cathode Bushing	Oil Immersed
Waveguide Output Flange	Mates with Modified JAN UG-52/U
Tuner	Calibrated, with shaft for motor drive ▲
Tuning Torque:	
Tube	15 in. oz. max.
Equipment	6 lbs. max.
Shaft Speed	1500 r.p.m. max.
Tuner Backlash ■ (at 9150 mc)	10 megacycles max.
Lubrication †	
Pressurization of Output	15 psia (min.) 45 psia (max.)
Vibration §	
Weight (Approx.)	16 pounds 4 ounces

PULSED OSCILLATOR SERVICE

MAXIMUM AND MINIMUM RATINGS:

	Min.	Max.	
Peak Anode Current		32	amp.
Peak Power Input		1000	KW
Duty		.0013	
Pulse Duration ⊕		3.3	μs
Rate of Rise of Voltage Pulse	90	180	kv/μsec
Anode Block Temperature		125	°C
Cathode Bushing Temperature		270	°C
Load Voltage Standing Wave Ratio		1.5	
Input Pulse Circuitry	A discharging network type pulser or other type which limits the fault power which could be applied to the magnetron to twice the normal pulse power must be used.		

TYPICAL OPERATION WITH LOAD VOLTAGE STANDING WAVE RATIO EQUAL TO OR LESS THAN 1.05 EXCEPT AS NOTED

OSCILLATION 1 WITH DUTY CYCLE OF .001

	Minimum	Typical	Maximum	
Heater Voltage♦		6.0		V
Peak Anode Voltage♦	27.0	28.0	29.0	kv
Peak Anode Current		25.0		amp.
Pulse Repetition Rate		2000		cps
Pulse Duration		.5		μsec
RF Bandwidth with worst phasing of 1.5 VSWR.		2.5	5.0	Mc
Pulling Figure at VSWR of 1.5		10	15	Mc
Pushing Figure			.5	Mc/amp
Thermal Factor for any 25° range between 75°C and 125°C			.35	Mc/°C
Thermal Drift★		20	35	Mc
Thermal Drift Time		8	15	Min.
Stability (missing pulses)● with worst phasing of 1.5 VSWR		.01	.5	%
Peak Power Output	200	250		KW

OSCILLATION 2 WITH DUTY CYCLE OF .001

	Minimum	Typical	Maximum	
Heater Voltage♦		6.0		V
Peak Anode Voltage♦	27.0	28.0	29.0	kv
Peak Anode Current		25.0		amp.
Pulse Repetition Rate		400		cps
Pulse Duration		2.5		μsec
RF Bandwidth with worst phasing of 1.5 VSWR.		1.0	1.5	Mc
Pulling Figure at VSWR of 1.5		10	15	Mc
Pushing Figure			.5	Mc/amp
Thermal Factor for any 25° range between 75°C and 125°C			.35	Mc/°C
Thermal Drift★		20	35	Mc
Thermal Drift Time		8	15	Min.
Stability (missing pulses)● with worst phasing of 1.5 VSWR		.1	.5	%
Peak Power Output	200	250		KW

LIFE TEST

LIFE TEST CYCLE□	1667	Cycles
Filament Warmup	3	Min.
Oscillation 1	3	Min.
Oscillation 2	15	Min.
Non Operational	9	Min.

LIFE TEST FAILURE CRITERIA (OSCILLATION 2 CONDITIONS)

Power	160	KW min.
Bandwidth	2.0	Mc Max.
Stability	1.0	% Missing Pulses

NOTES

▲ Connection to the shaft should be through a flexible coupling. Any connection to the shaft that tends to introduce an axial or radial thrust may reduce the usuable life of the tuner.

■ Backlash is defined as the difference in frequency when a given dial setting is approached in either direction of rotation.

† The 6249B is factory lubricated and should not require further lubrication. Care should be exercised to keep foreign particles out of the exposed portions of the tuner mechanism. Should further lubrication be desired, Dow Corning Silicone No. 33 Grease should be used on the worm and "Lockease" Colloidal Graphite oil on the shaft bearings.

§ Special vibration problems encountered with the 6249B should be referred to the Microwave Engineering Dept. WEC, Elmira, New York. The 6249B has been operationally tested at vibration levels up to 5 g's with vibration frequencies up to 1500 cycles per second.

♦ Heater voltage should be 6.0 volts ± 10% for maximum life at .001 duty. Higher voltages are permissable but may result in short life. For the following condition, heater voltage should be 8.0 V ± 10%:

tp = .45 to .55 μs
Du = .0005
Lb = 14 mAdc

♦ This represents the range of production at 9000 mc. See curves for other frequencies.

★ Thermal Drift is the change in frequency from the start of oscillation at 9375 mc until thermal equilibrium has been reached.

● A pulse is considered missing if its amplitude is less than 70% of a normal pulse.

□ Frequency is varied during life test in 100 Mc steps every 8 hours from 8500 to 9600 Mc. The waveguide load is set at a VSWR of 1.5 (min.) and varied continuously through all phases every 15 minutes.

⊕ Longer pulse widths are permissable depending upon operating requirements.

OPERATING RECOMMENDATIONS

MAXIMUM RATINGS:

The maximum ratings given in the data must not be exceeded if the listed performance characteristics are to be realized. The equipment manufacturer must take due precaution to insure that these limits are not exceeded by equipment tolerances or by possible supply voltage variations.

HIGH VOLTAGE PRECAUTIONS:

The high voltage at which the 6249B operates is dangerous to life. Care should be taken to prevent contact of personnel with the high voltage terminals of the tube. The usual method of protecting the personnel is to fasten the tube mounting plate to a grounded metal container large enough to allow insulating space around the cathode bushing. Connections are made to the cathode terminals inside this container and the space around the terminals is filled with an insulating fluid. The magnetron anode is also grounded to the container. It is necessary that a low impedance connection exists between the equipment and the mounting plate and anode for proper operation and satisfactory performance.

MAGNETIC FIELD PRECAUTIONS:

The 6249B is supplied with integral magnets which are factory adjusted to provide proper operation. It is important, therefore, that no magnets or magnetic materials be brought within 4 inches of the tube to prevent demagnetization of the tube magnets.

HANDLING PRECAUTIONS:

The 6249B should be protected against shock when it is handled. The tube is normally supplied with a guard, to protect the cathode bushing, which is removed when the tube is installed. A polyethylene bag is placed over the tuner to prevent dust and other particles from collecting in the gear mechanism. This too must be removed for operation. A dust cover is also provided to keep particles out of the waveguide system as the entrance of particles into the output section will cause arcing and could result in tube destruction.

MOUNTING DIRECTIONS:

The 6249B should be mounted with its weight supported by its mounting flange. The surface should be flat and provide adequate clearance for the cathode. The waveguide output is designed to mate with a modified JAN UG-52A/U flange. The UG-52A/U flange is modified by enlarging the threaded holes to allow entry of 8-32 screws. It is preferable that the waveguide include a flexible section where it is joined to the tube to prevent distortion of the tube output. Before connecting the output to the waveguide, the user should check the window to insure its freedom from dust which could cause arcing.

COOLING:

An air blast should be provided across the fins. This air should be directed to the fins by an appropriate flexible boot for best cooling efficiency. An air flow of 35 CFM at a pressure of 2.0 inches of water should be adequate to maintain the anode temperature below the maximum of 125°C rating. Anode temperature should be measured by contacting the output sleeve 1.5 inches from the face of the waveguide flange. Care should be taken to insure positive contact with the thermocouple. It is usually necessary to scrape a small bit of paint from the magnetron for this measurement.

STARTING:

When starting a tube for the first time, a heater voltage of 9.0 volts should be applied for 3 minutes. Care must be taken to limit the starting surge surge current to 39 amperes max. Normal heater current at this voltage is between 12.8 and 15.6 amperes. This will allow the cathode to reach operating temperature and the getter to become operative. Pulse power in the form of negative pulses may then be applied to the cathode. If instability due to arcing occurs, it may be necessary to season the tube at the full 9.0 volts on the heater and to operate at reduced power for 10 minutes. Normally the heater should be reduced to 6.0 volts immediately after application of full rated operating voltages. When operating conditions are reached, back bombardment of the cathode occurs which tends to raise the cathode temperature, necessitating the reduction in heater voltage. The heater should be protected from the pulse power by placing a suitable capacitor across the heater terminals. The cathode terminal may be identified by the red marking on the lug. It is important to attach the anode circuit return to this terminal to prevent heater burn-out.

TYPICAL FREQUENCY DRIFT CHARACTERISTICS
FROM COLD START

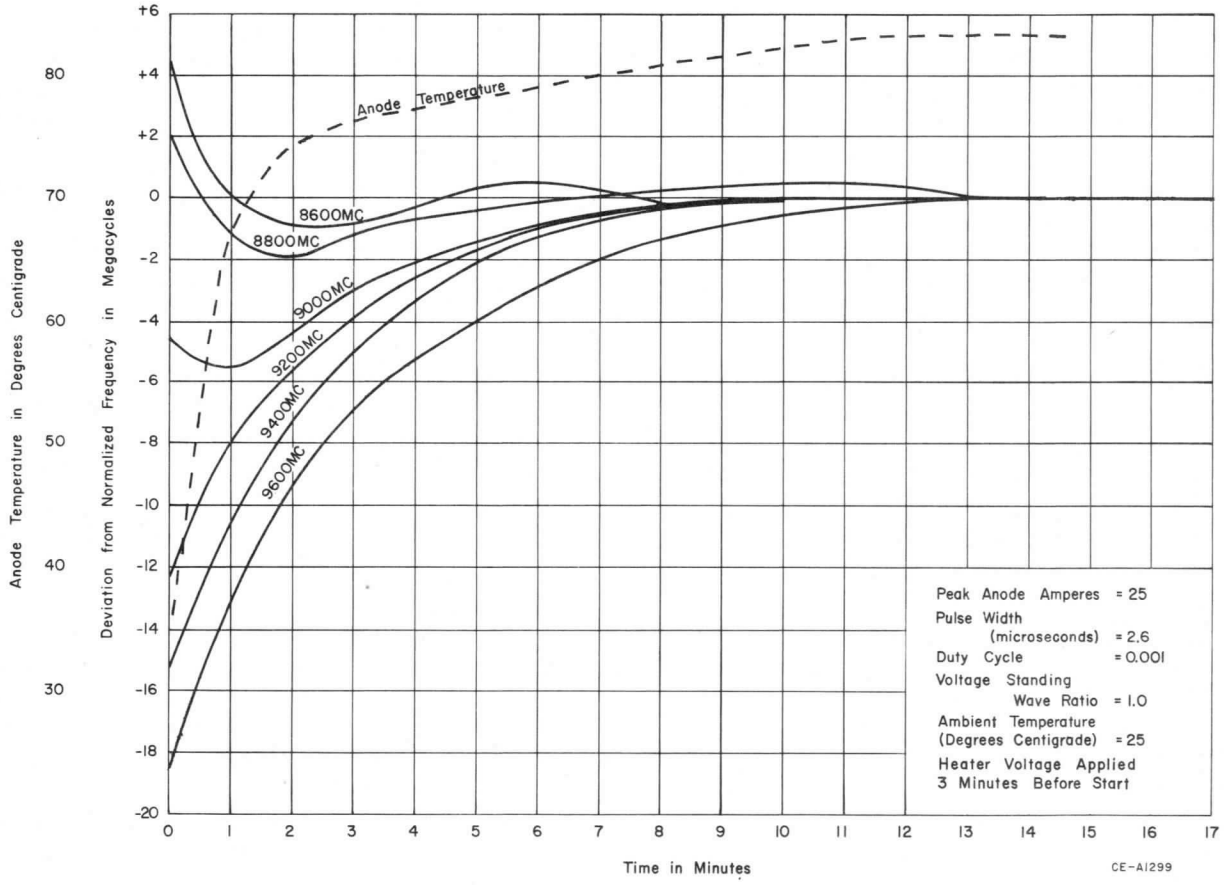

THERMAL STABILIZATION:

As the anode block warms up, the cavities increase in size, causing a drop in frequency. At higher frequencies with the crown-of-thorns tuner inserted into the cavities, the pins heat up. This causes an expansion of the tuner which raises frequency. This is the dominant effect. The 6249B is designed to reach equilibrium as quickly as possible consistent with these opposing phenomena. The time required for stabilization is shown in CE-A 1299.

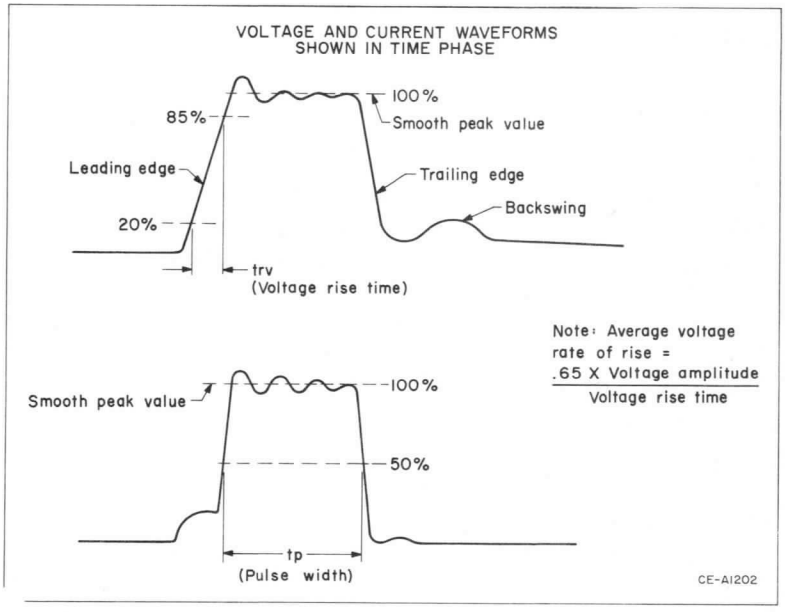

EQUIPMENT:

For best operation of the 6249B, it is important that the voltage and current pulses be

carefully shaped. The voltage rise times indicated in the data must be rigorously adhered to. The current and voltage pulses appear in time phase in CE-A1202. The pulse width is determined by the width of the current pulse at the 50% amplitude level. Measurement of pulse width using the r-f envelope is not recommended. The ripple on the top of the current pulse should have a peak to peak amplitude less than 10 percent of the smooth peak value. A sloping pulse is also objectionable. Either of these conditions will result in poor spectra especially under 2.5 microsecond operation. The trailing edge is of less importance but it can contribute to poor spectra if excessive. The backswing should be maintained at a level low enough to prevent the tube from breaking back into oscillation again. This could result in increased system noise. The proper measurement of the voltage and current pulses is very important. It is not sufficient to measure the voltage pulse alone since a magnetron tends to be a constant voltage device and will appear to smooth out an otherwise poor pulse. A modulator is shown schematically in CE-A 1203 with location of voltage and current viewers indicated. A suitable voltage viewer is a capacitor divider having a shunt capacity of about 6 micromicrofarads shielded as shown in CE-A 1301.

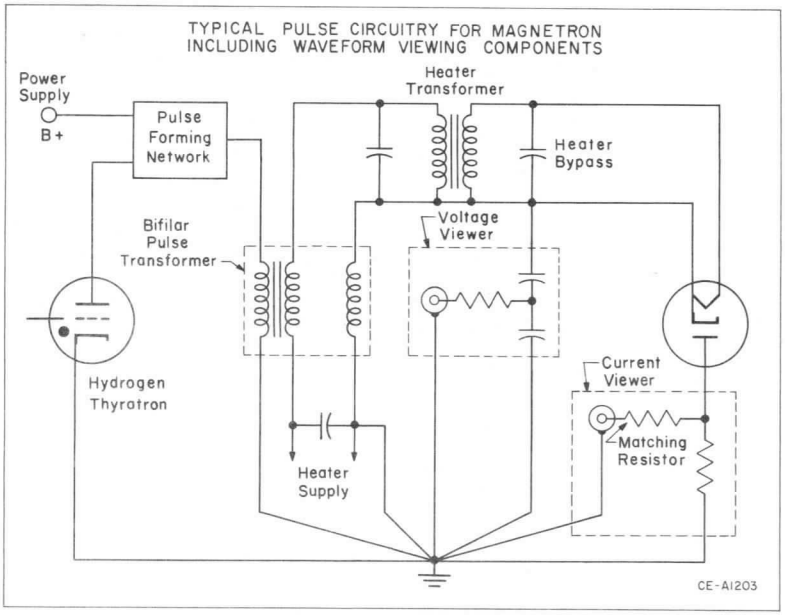

For current viewing, a resistor with a value of about 2.5 ohms should be used. It should consist of a number of carbon resistors mounted radially as shown in CE-A 1302. Best results are obtained if these pulses are fed directly to the deflection plates of an oscilloscope.

The 6249B should be operated with a well matched load. Tube life and reliability will be increased if the line is well matched. As shown in the data, a maximum VSWR of 1.5 is permitted. Under these conditions a life of 500 anode hours minimum may be expected. Typical life is considerably longer. Operation of the 6249B under

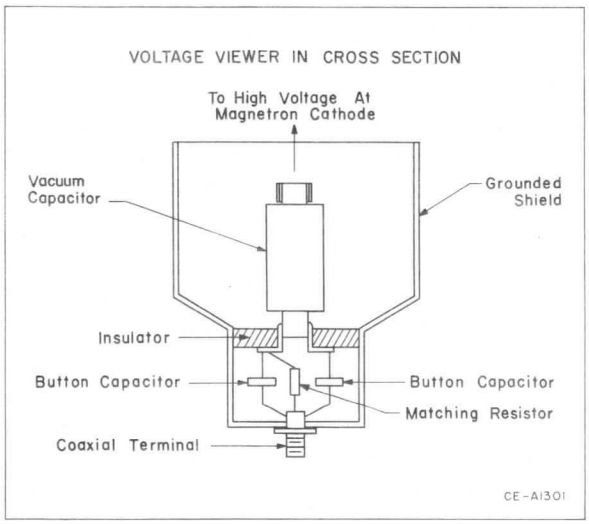

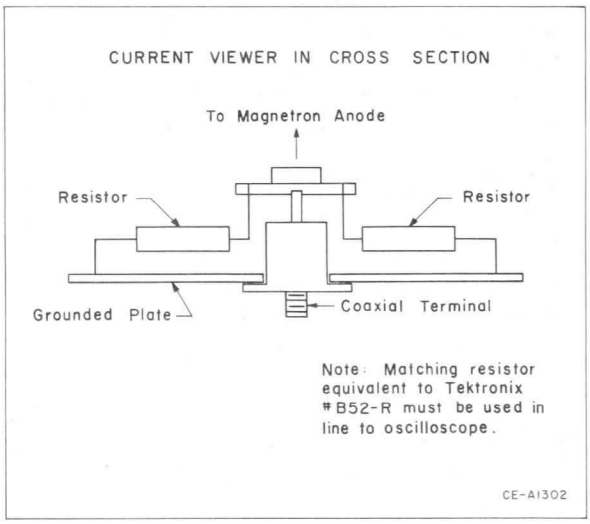

a mismatch can be best seen by referring to the Rieke diagrams shown in CE-B1303 and CE-B1304. The area of highest power is called the "sink" and represents the highest coupling to the magnetron. Under these conditions the r-f spectrum will tend to broaden. This is especially true at 2.5

RIEKE DIAGRAM

Peak Kilovolts = 28.5
Peak Anode Amperes = 25
Pulse Duration
(microseconds) = 2.6
Duty = 0.001
Frequency (megacycles) = 8750

REFERENCE POINT:
MAGNETRON FLANGE

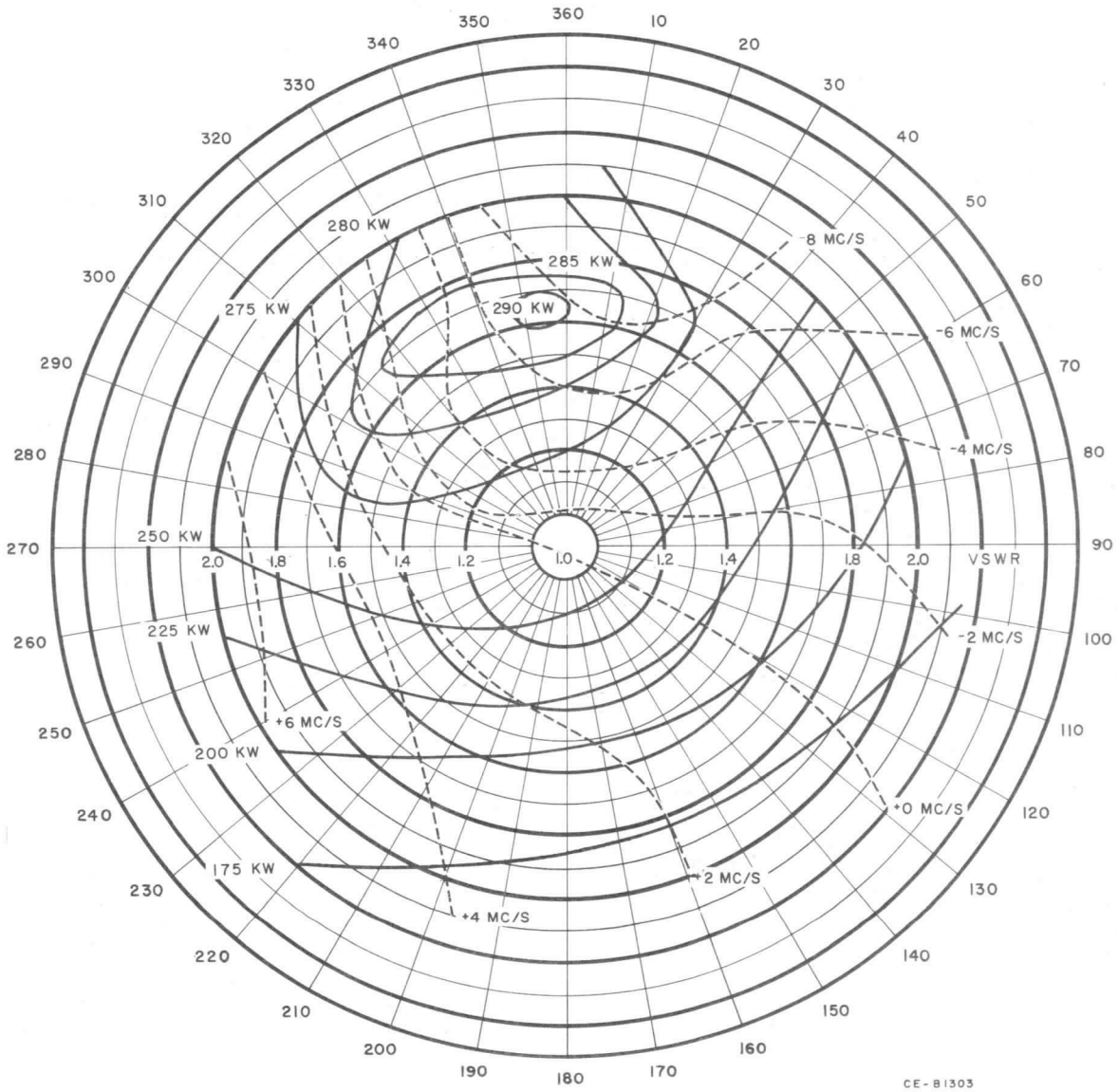

microsecond operation. When the phase of the VSWR is changed to move the operation into the low power region (anti sink) the magnetron may tend to show signs of instability. This may take the form of arcing and an increase in missing pulses. This results because the magnetron has been un-

RIEKE DIAGRAM

Peak Kilovolts = 29.7
Peak Anode Amperes = 25
Pulse Duration
(microseconds) = 2.6
Duty = 0.001
Frequency (megacycles) = 9375

REFERENCE POINT:
MAGNETRON FLANGE

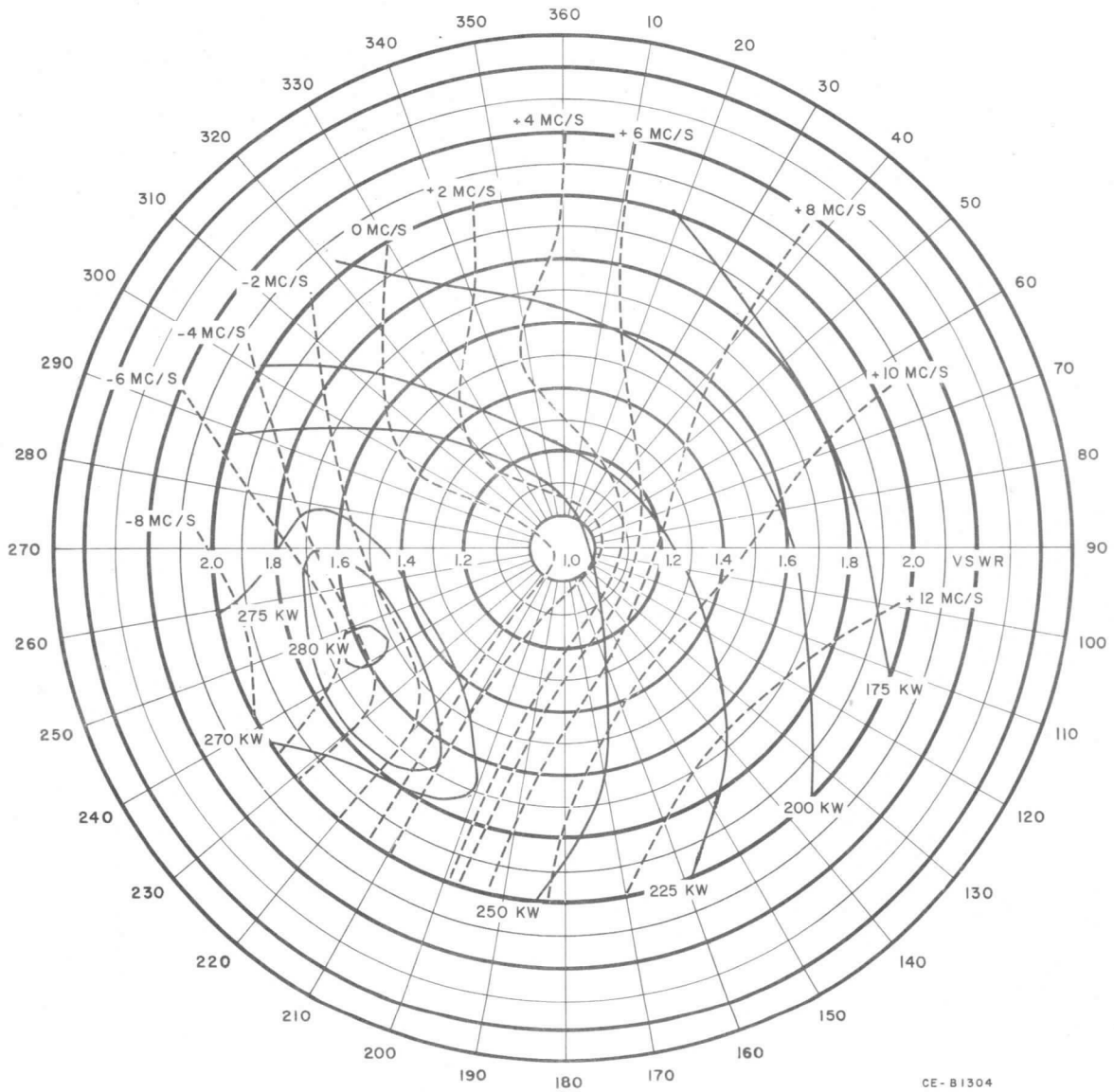

loaded and the r-f voltages inside the magnetron are increased, making internal r-f discharges more likely.

A second problem encountered with tunable magnetrons involves the distance between the mismatch and the tube flange. This is known as the "long lines" effect and is an additional limit on the VSWR that is permitted in the load as shown in CE-A 1305. If the load presents a high VSWR at a sufficient distance from the tube, discontinuities in the magnetron tuning characteristic may result. This can be avoided by using a short system or by keeping the VSWR low. The use of a ferrite isolator with the 6249B provides a convenient solution of the problem.

PERFORMANCE:

Typical performance charts for the 6249B are shown in CE-C 1306. The volt-ampere characteristics of the tube are shown with power output indicated with circles. The curves vary depending on the condition of the load and the tube frequency.

TUNING:

The 6249B is particularly well suited for rapid tuning with motor drive systems. Tuning is accomplished by rotating a worm shaft which moves a calibrated gear. The calibrations on the gear, together with a geneva mechanism give an indication of the magnetron frequency. The gear drives the crown-of-thorns tuner through a carefully constructed thread drive. Speeds up to 1500 R.P.M. are permitted on the shaft which allow excursion of the frequency band (8500 to 9600 M.C. in approximately 7 seconds. No appreciable wear should be expected in 10000 complete excursions (8500 to 9600 M.C. and return) at the highest speed permitted.

RECOMMENDED OPERATING REGION

For 6249B in RG-51U Waveguide

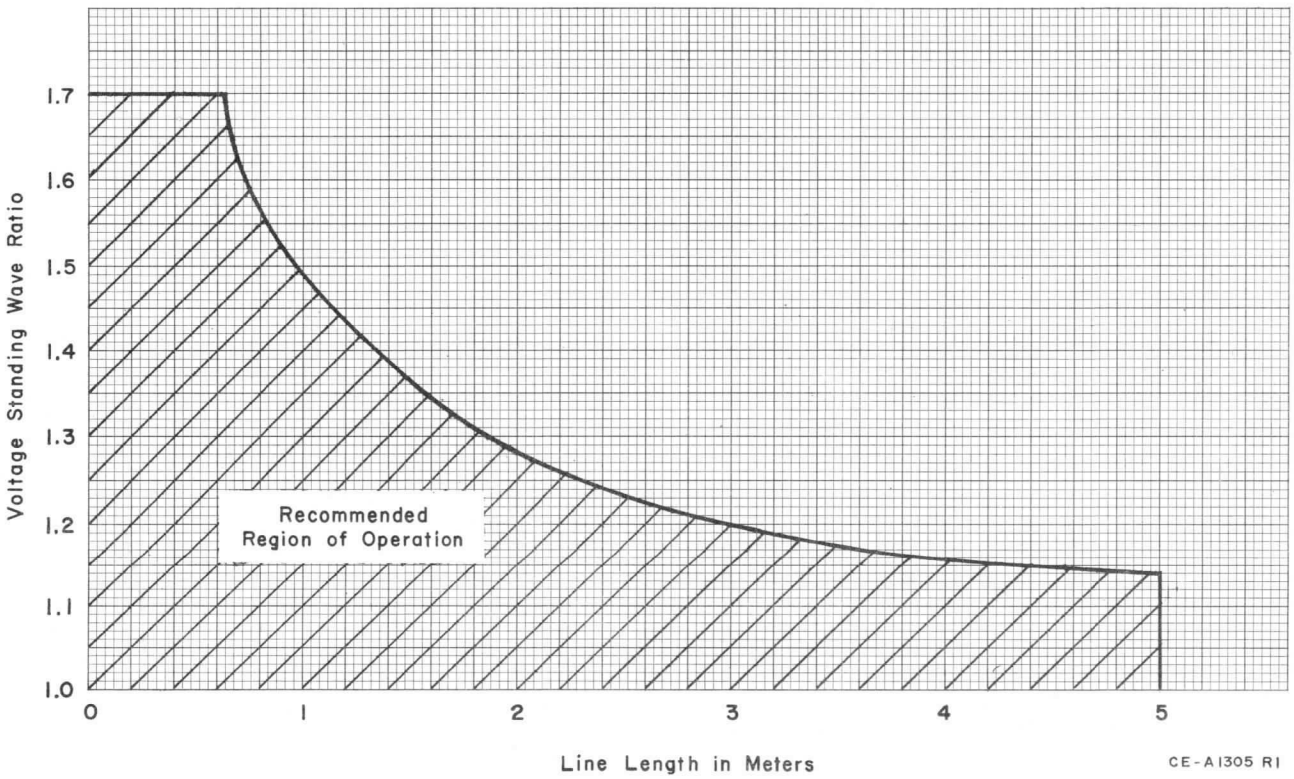

PERFORMANCE CHART DATA FOR 6249B

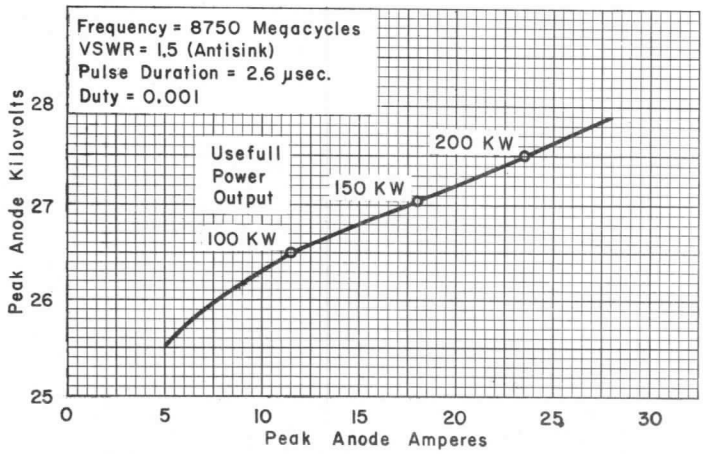

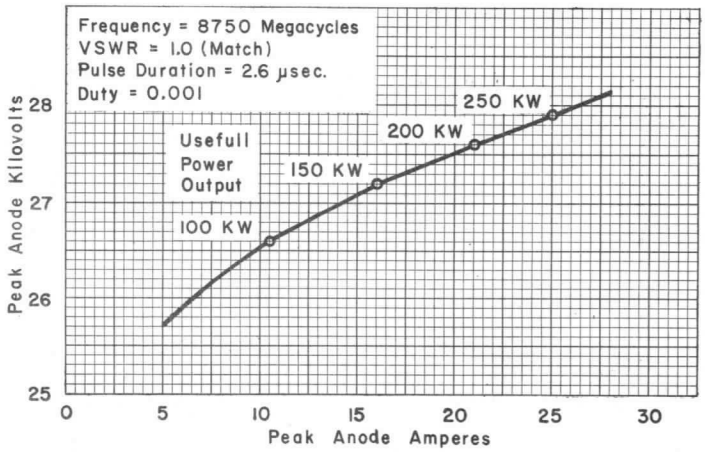

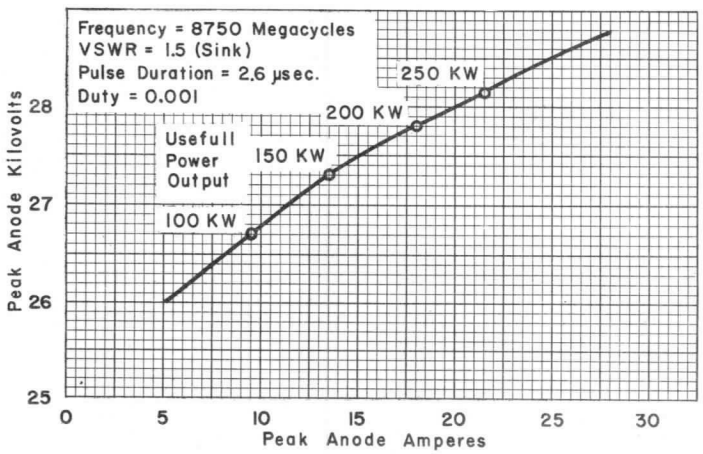

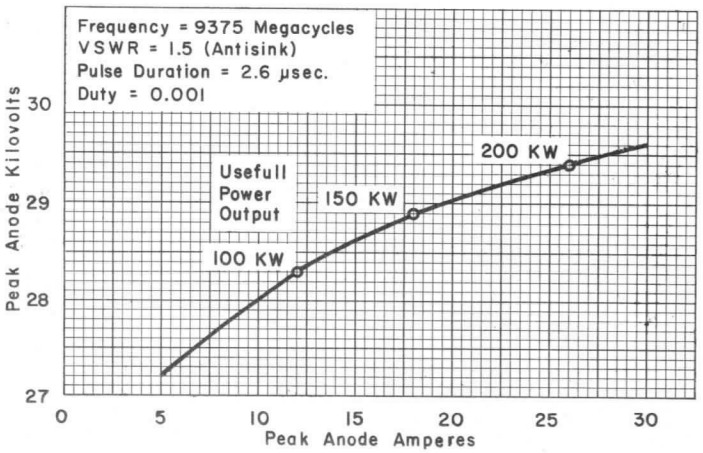

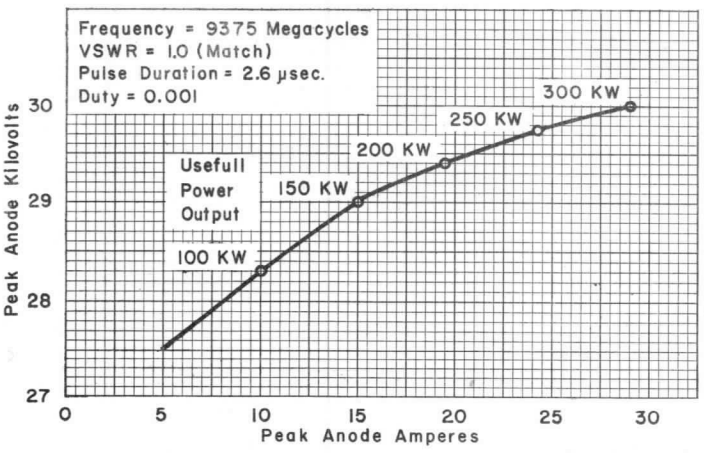

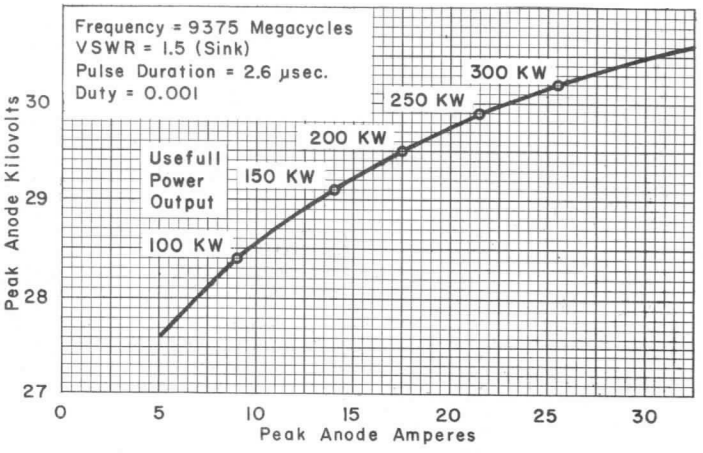

CE-C1306

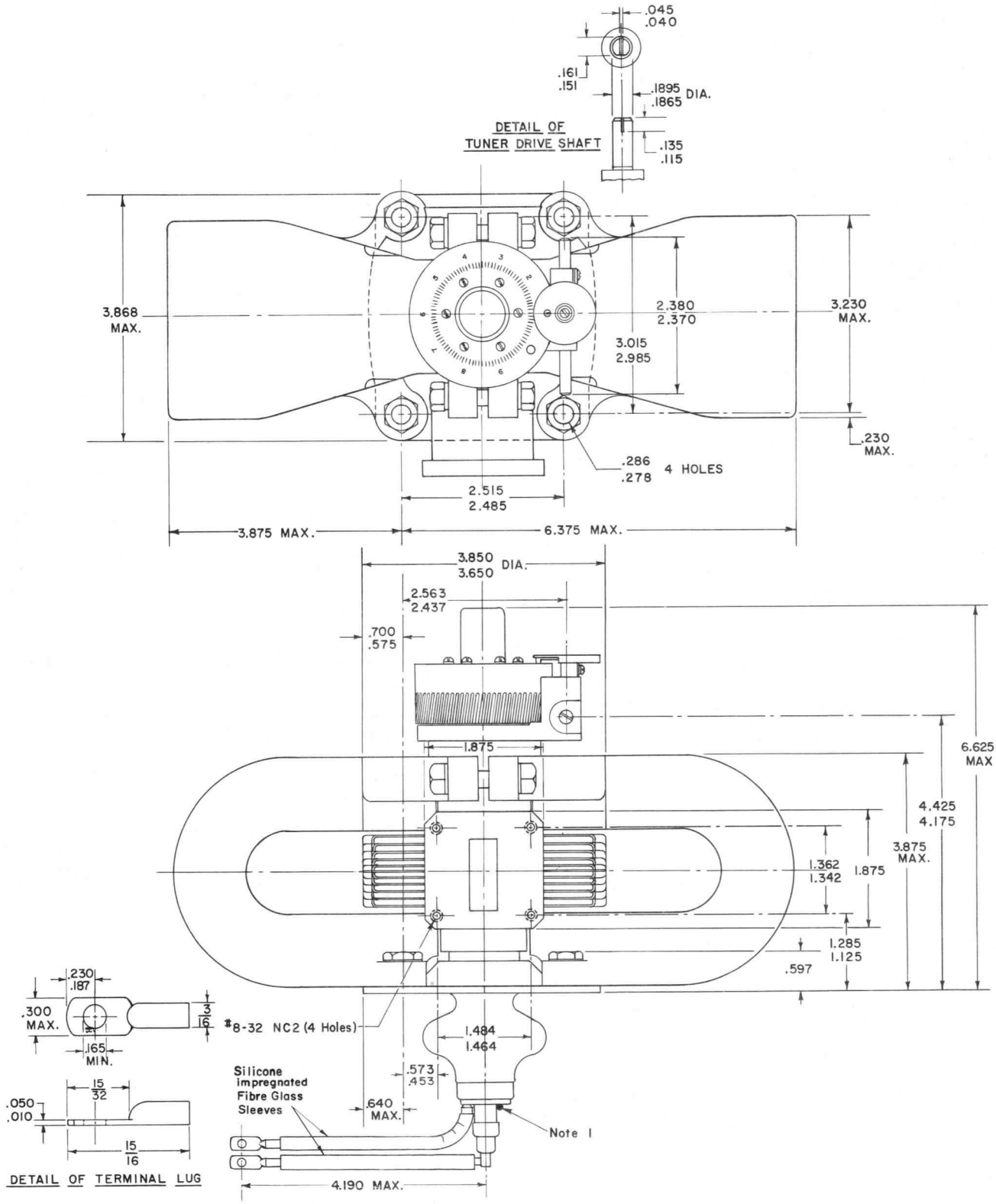
.045
.040
.161
.151
.1895
.1865 DIA.
DETAIL OF
TUNER DRIVE SHAFT
.135
.115
3.868
MAX.
2.380
2.370
3.230
MAX.
3.015
2.985
.230
MAX.
.286
.278 4 HOLES
2.515
2.485
3.875 MAX.
6.375 MAX.
3.850
3.650 DIA.
2.563
2.437
.700
.575
1.875
6.625
MAX
4.425
4.175
3.875
MAX.
1.362
1.342
1.875
1.285
1.125
.597
.230
.187
.300
MAX.
3/16
.165
MIN.
#8-32 NC2 (4 Holes)
1.484
1.464
.573
.453
Silicone
impregnated
Fibre Glass
Sleeves
.640
MAX.
Note 1
15/32
.050
.010
15/16
DETAIL OF TERMINAL LUG
4.190 MAX.

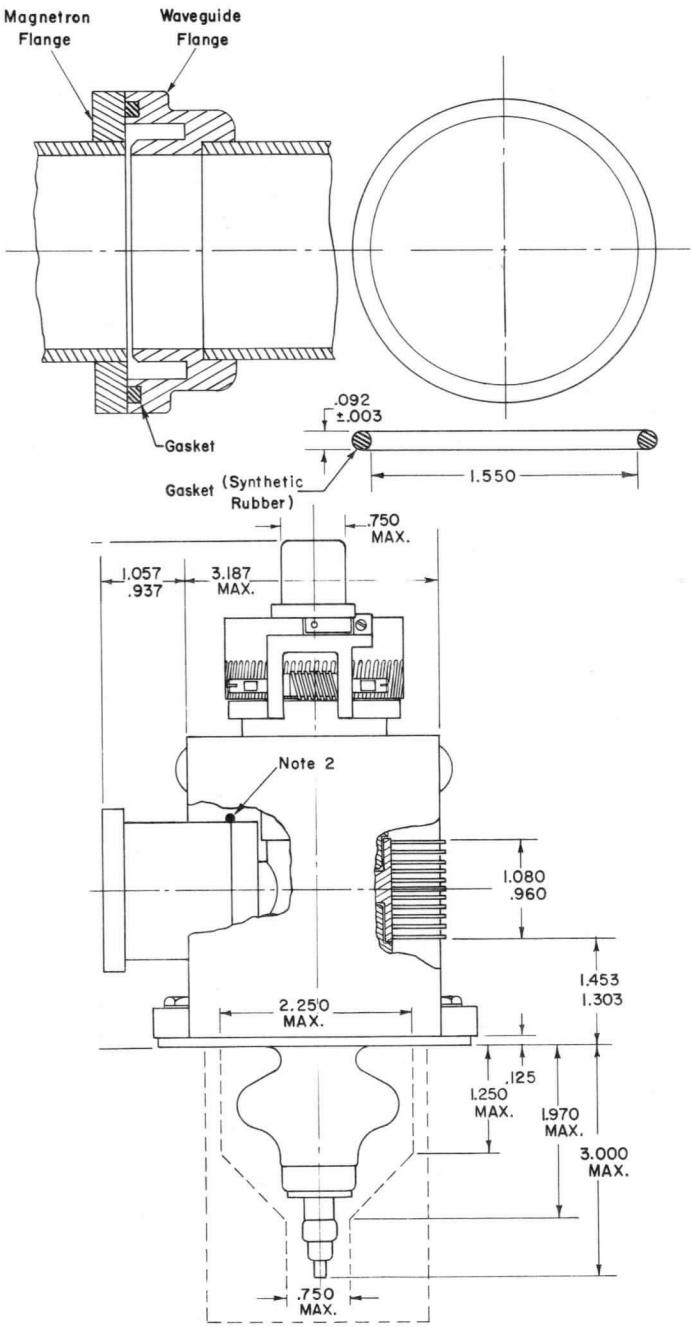

NOTE 1: Cathode bushing temperature should be measured at this point.

NOTE 2: Anode temperature should be measured at this point on surface of waveguide 1.500 inch from face of waveguide flange.

NOTE 3: Brown paint on terminal identifies the lead common to heater and cathode.

NOTE 4: All joints in mounting flange and waveguide assembly must be vacuum tight.

NOTE 5: Operating frequency increases as the tuner shaft is rotated in a counterclockwise direction as viewed from waveguide side of tube. Approximately 75 revolutions of the tuner shaft are required to tune from 8500 to 9600 megacycles.

TYPICAL OPERATING CHARACTERISTICS

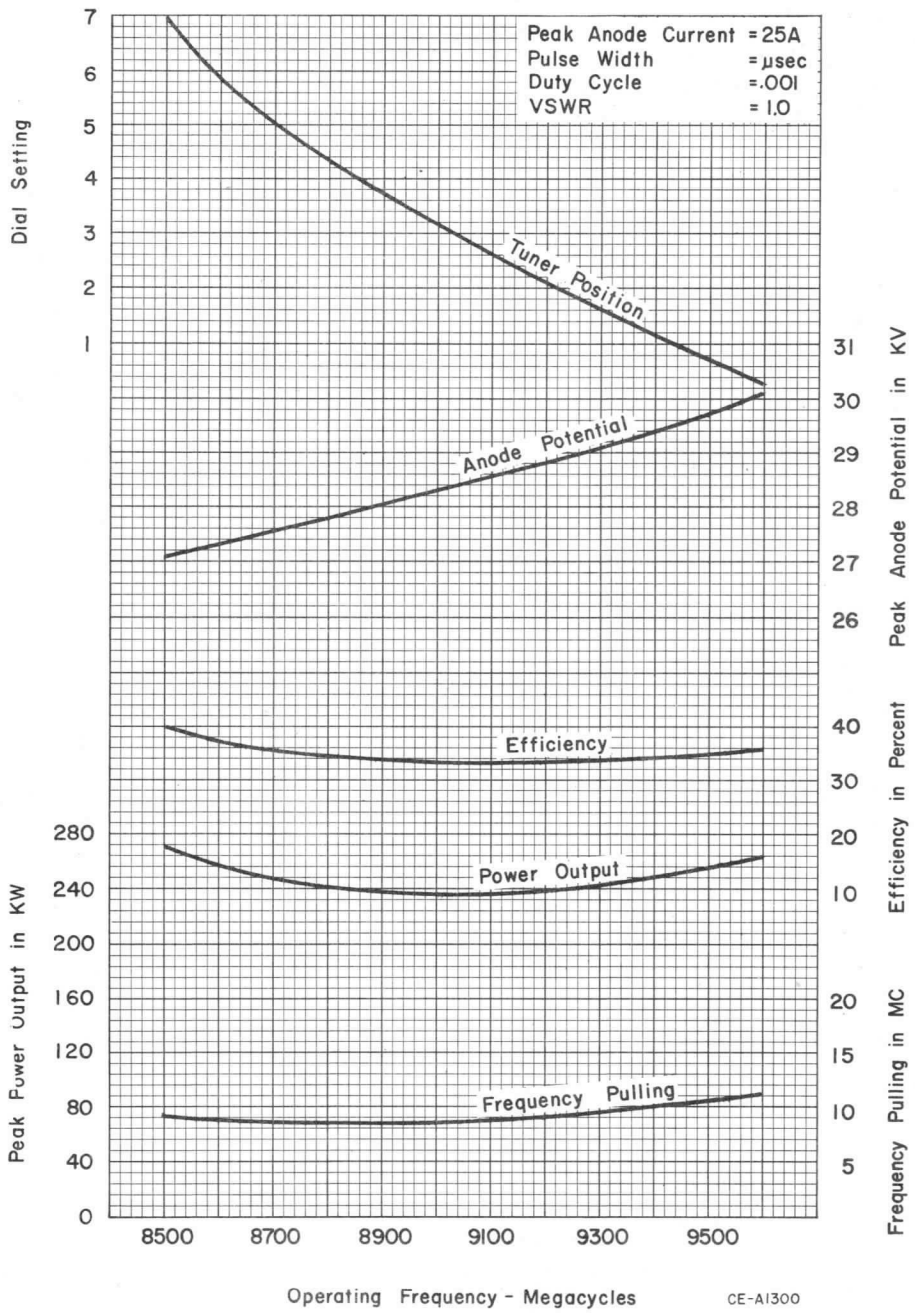

MAGNETRON TYPE 6865A

Hand Tunable with Lock
8750 – 9600 Mc.

Forced Air Cooled
Integral Magnet

200 KW Peak
Power Output

The 6865A is a tunable X-band magnetron. It is designed to serve as a pulse oscillator at frequencies between 8750 and 9600 megacycles per second. Its tuner design allows frequency to be set at any desired frequency and locked in place.

The 6865A has a typical power output of approximately 200 kilowatts over its entire frequency range. Pulse widths up to 2.5 microseconds may be used. Thermal drift is typically 10 megacycles, even at the extremes of the frequency range. The 6865A provides excellent spectrum shape and excellent stability of operation.

Structurally, the 6865A employs a double strapped, vane type anode. Tuning is accomplished by contacting plungers in four tuner cavities which are tightly coupled to the main resonator system. Tuning is therefore accomplished remote from the interaction space and in low field areas of the tube, greatly improving both electrical and thermal stability. An impregnated cathode is used which is arc resistant and has excellent life properties. Mechanical gearing is provided to "gang" the tuners and permit tuning from a single shaft. The 6865A has a wave-guide type output which is designed to couple to a modified UG-52A/U choke flange. The output may be pressurized, although no breakdown will occur if pressure is maintained at 1 atmosphere.

The 6865A tuner is designed for hand tuning. A lock nut is provided which may be tightened after the desired frequency is reached. A calibrated micrometer-type dial provides an indication of tube frequency.

The 6865A is designed for transmitter service in radar systems. The tube is useful in ground as well as airborne installations where a high performance X-band power source is required.

ELECTRICAL:

Heater, for Unipotential Cathode:		
Voltage (ac)	13.75	Volts
Current at 13.75 Volts	Min.: 2.8 Max.: 3.5	Amperes
Starting Current	Maximum instantaneous starting current must never exceed 12 amperes.	
Minimum Cathode Heating Time	150	Seconds
Frequency	8750-9600	Megacycles
Maximum Frequency Pulling at VSWR of 1.5	13	Megacycles

MECHANICAL:

Mounting Position	Any
Dimensions	See Outline Drawing
Air Flow:	
To fins	An air stream should be directed along the cooling fins toward the body of the tube. Adequate flow should be provided so that the temperature of the anode block does not exceed 150° C.
Cathode Bushing (Note 1)	Oil Immersed or Pressurized
Waveguide Output Flange	Mates with modified JAN UG-52/U
Cathode Connector	The cathode connector should contain a built-in capacitor such as the Jettron No. 9000-C manufactured by Jettron Products, Hanover, New Jersey.
Tuner	Calibrated, with Lock
Net Weight (Approx.)	12 Pounds
Shipping Weight	25 Pounds

PULSED OSCILLATOR SERVICE

RATINGS:	Min.	Max.	
Peak Anode Voltage	--	23	Kilovolts
Peak Anode Current	--	27.5	Amperes
Peak Power Input	--	630	Kilowatts
Duty	--	0.001	
Pulse Duration	--	2.5	Microseconds
Rate of Rise of Voltage Pulse (tp > 1.0 μsec)	70	180	kv/μsecond
Rate of Rise of Voltage Pulse (tp < 1.0 μsec)	90	200	kv/μsecond
Anode Block Temperature	--	150	°C
Cathode Bushing Temperature	--	165	°C
Load Voltage Standing Wave Ratio	--	1.5	

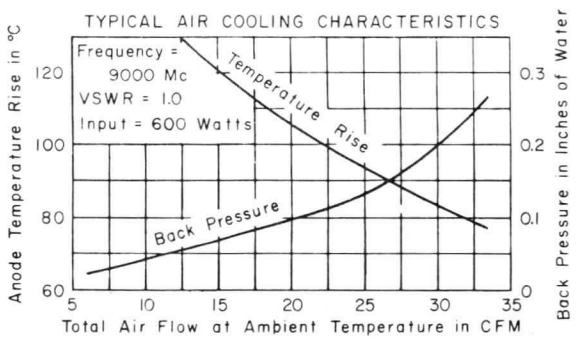

TYPICAL OPERATION WITH LOAD
VOLTAGE STANDING WAVE RATIO
EQUAL TO OR LESS THAN 1.05 EXCEPT AS NOTED

WITH DUTY CYCLE OF 0.001

Heater Voltage (Note 2)	--	--	
Peak Anode Voltage	22	22	Kilovolts
Peak Anode Current	27.5	27.5	Amperes
Pulse Repetition Rate	2000	400	cps
Pulse Duration	0.5	2.5	μseconds
RF Bandwidth with worst phasing of 1.5 VSWR	4.0	0.8	Megacycles
Side Lobes	10	8	dB
Pulling Figure at VSWR of 1.5	10	10	Megacycles
Pushing Figure	0.2	0.2	Mc/amp
Thermal Factor for any 30° range between −55° C and 150° C	0.2	0.2	Mc/°C
Peak Power Output	220	220	Kilowatts

EQUIPMENT DESIGN RANGE OF CHARACTERISTICS

Characteristic	Note	Minimum	Maximum	Units
Heater Current	3	2.9	3.5	Amperes
Peak Anode Voltage	4	20	23	Kilovolts
Peak Power Output	5	190	--	Kilowatts
Per-cent Missing Pulses	6	--	0.25	Per-Cent

NOTES

1. No breakdown will occur if pressure is maintained above 600 mm Hg. Air flow must be sufficient to keep bushing below 165° C.
2. Heater voltage should be 0 volts for maximum life at 27.5 ma. and 0.001 duty. Higher voltages are permissible but may result in short life.
3. With heater volts equal to 13.75 (a-c or d-c).
4. With peak anode current of 27.5 amperes.
5. With peak anode voltage approx. 22 KV, anode block temperature approx. 115° C, pulse duration of 2.5 microseconds and max. load VSWR equal to or less than 1.05.
6. Missing pulses are those with energy level is less than 70% of normal value. Measured with peak anode current of 27.5 amperes, peak anode voltage approx. 22 KV, anode block temperature approx. 115° C, pulse duration of 1.0 microsecond, load VSWR of 1.5 and load VSWR phase set for max. instability.

RECOMMENDED HEATER VOLTAGE

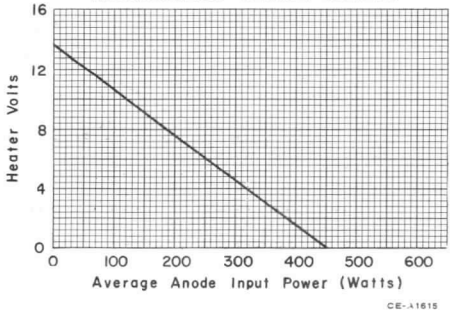

NOTES FOR OUTLINE DRAWING

1: Reference plane A is defined as the plane through that portion of the mounting flange designated as annular surface D. Reference plane B is defined as the plane which is perpendicular to plane A and passes thru the exact centers of mounting flange holes number 2 and number 3. Reference plane C is defined as the plane which is perpendicular to plane A and plane B and passes thru the exact center of mounting flange holes number 3 and number 4.

2: Surfaces D and E of the waveguide output flange and the mounting flange are made so that they may be used to provide a hermetic seal. This surface shall be flat within 0.015 TIR with a surface roughness of 32 per MIL-STD-10.

3: The axis of the heater-cathode terminal will be within the confines of a cylinder whose radius is 3/64 inch and whose axis is perpendicular to reference plane A at the specified location.

4: All points on mounting flange other than specified in Note 1 must lie within 0.015 inch above or below reference plane A.

5: The limits include angular as well as lateral deviations.

6: These dimensions define extremities of the 0.169 inch internal diameter of the cylindrical heater-terminal.

7: These dimensions define extremities of the 0.540 inch internal diameter of the cylindrical heater-cathode terminal.

8: No part of the connector device for the heater and heater-cathode terminals should bear against the underside of this lip.

9: The heater terminal and the heater-cathode terminal are concentric within 0.010 inch.

10: Anode temperature shall be measured at junction of waveguide and anode back.

11: A 1-3/32" minimum long stud thru the mounting holes shall not interfere with any part of the tube.

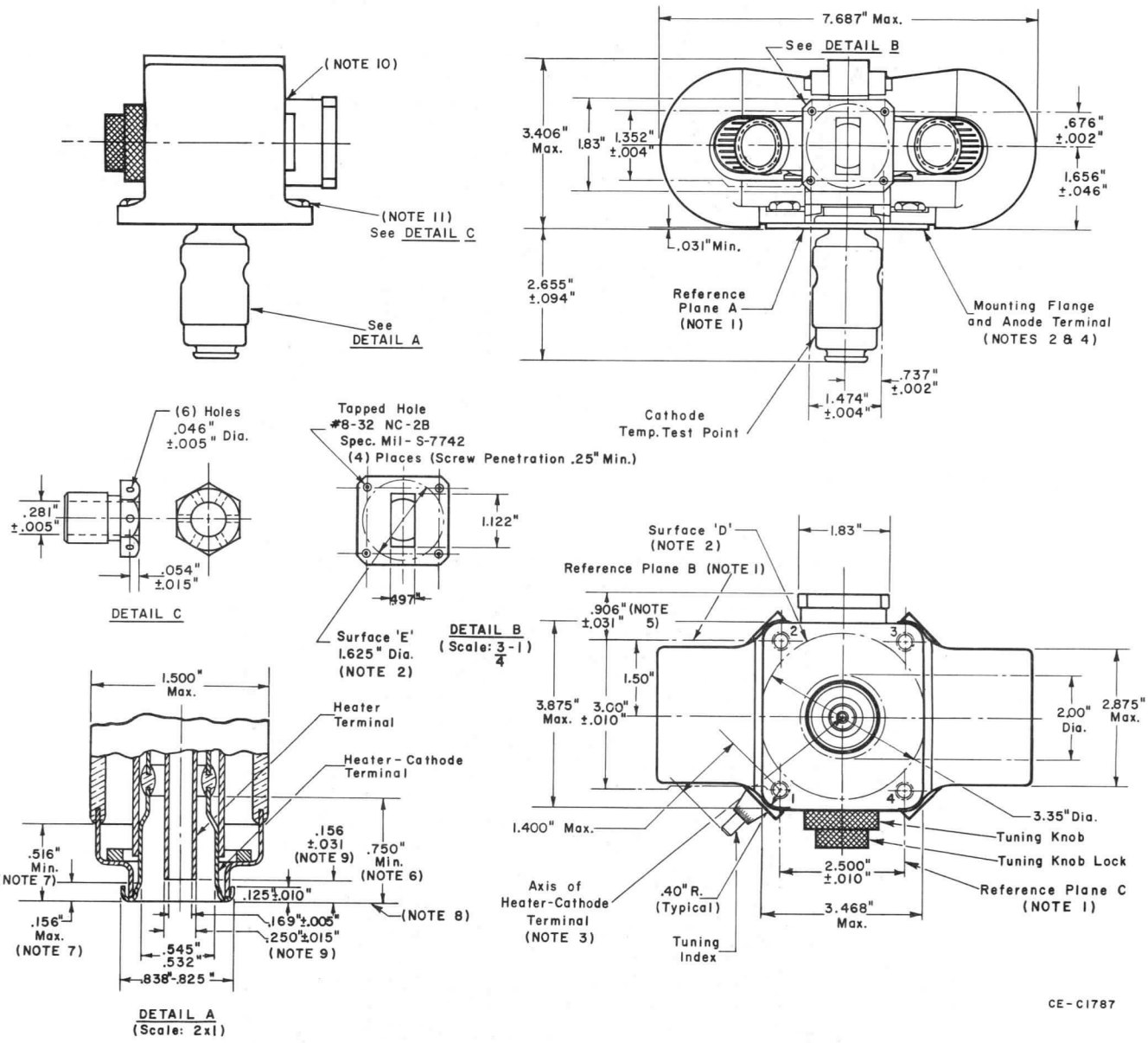
(NOTE 10)
(NOTE 11)
See DETAIL C
See DETAIL A
7.687" Max.
See DETAIL B
3.406" Max.
1.83"
1.352" ±.004"
.676" ±.002"
1.656" ±.046"
.031" Min.
2.655" ±.094"
Reference Plane A (NOTE 1)
Mounting Flange and Anode Terminal (NOTES 2 & 4)
.737" ±.002"
1.474" ±.004"
Cathode Temp. Test Point
(6) Holes .046" ±.005" Dia.
.281" ±.005"
.054" ±.015"
DETAIL C
Tapped Hole #8-32 NC-2B Spec. Mil-S-7742 (4) Places (Screw Penetration .25" Min.)
1.122"
.397"
Surface 'E' 1.625" Dia. (NOTE 2)
DETAIL B (Scale: 3-1/4)
Surface 'D' (NOTE 2)
1.83"
Reference Plane B (NOTE 1)
.906" ±.031" (NOTE 5)
1.50"
3.875" Max.
3.00" ±.010"
2.00" Dia.
2.875" Max.
1.400" Max.
3.35" Dia.
Tuning Knob
Tuning Knob Lock
2.500" ±.010"
Reference Plane C (NOTE 1)
Axis of Heater-Cathode Terminal (NOTE 3)
.40" R. (Typical)
3.468" Max.
Tuning Index
1.500" Max.
Heater Terminal
Heater-Cathode Terminal
.516" Min. (NOTE 7)
.156 ±.031 (NOTE 9)
.750" Min. (NOTE 6)
.125±.010"
(NOTE 8)
.156" Max. (NOTE 7)
.169"±.005"
.250"±.015" (NOTE 9)
.545" .532"
.838"-.825"
DETAIL A (Scale: 2x1)
CE-C1787

RECOMMENDED OPERATING REGION
IN
RG-51/U WAVEGUIDE

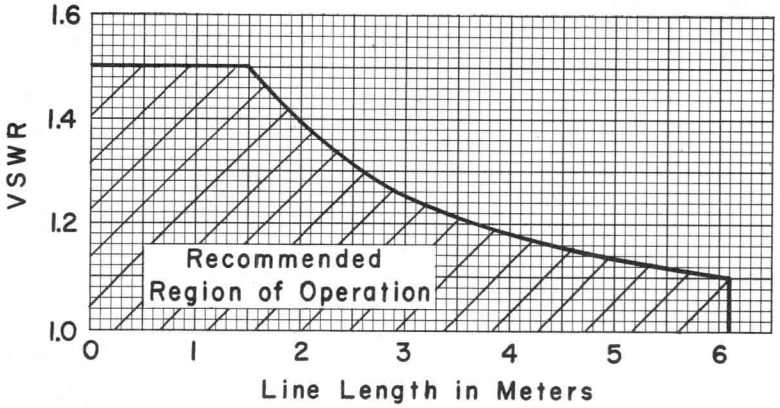

CE-A1610

TYPICAL FREQUENCY DRIFT CHARACTERISTICS

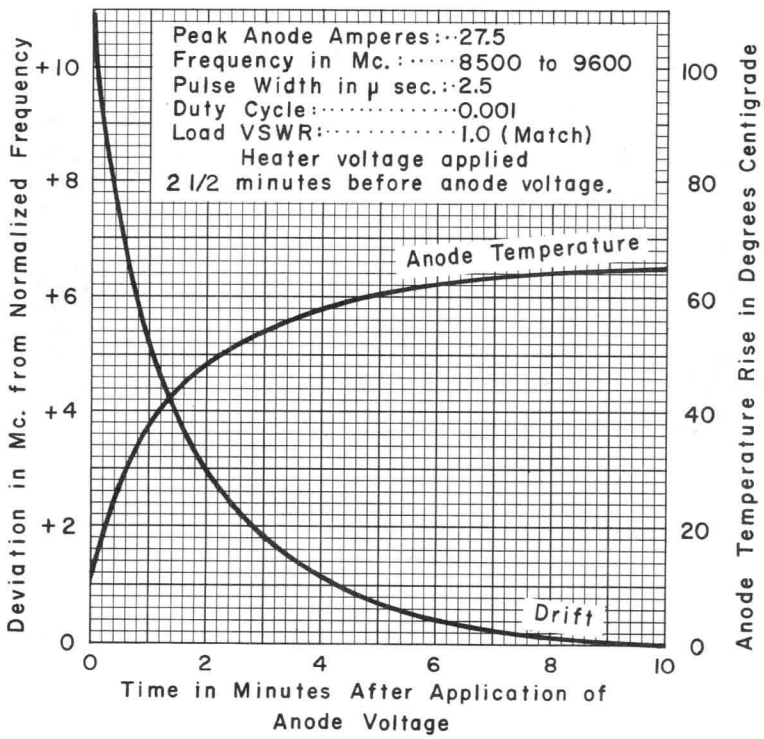

CE-A1607

The information contained herein is supplied without assuming responsibility for infringement of patents or other rights of third parties which may result from its use. No license is granted by implication or otherwise under any patent or patent rights of Westinghouse Electric Corporation.

August 15, 1962

MAGNETRON TYPE 7008

Servo-Tunable
8500-9600 M.C.

Forced Air Cooled
Integral Magnet

230 KW Peak
Power Output

The type 7008 is a tunable X-band magnetron. It is designed to serve as a pulse oscillator at frequencies between 8500 and 9600 megacycles per second. Its tuner design makes it particularly suitable for applications requiring rapid tuning over its operating range.

The 7008 has a typical power output of approximately 230 kilowatts over its entire frequency range. Pulse widths up to 3.3 microseconds may be used. Thermal drift is typically 20 megacycles, even at the extremes of the frequency range. The 7008 provides excellent spectrum shape and excellent stability of operation.

Structurally, the 7008 employs a double strapped, vane type anode. Tuning is accomplished by contacting plungers in four tuner cavities which are tightly coupled to the main resonator system. Tuning is therefore accomplished remote from the interaction space and in low field areas of the tube, greatly improving both electrical and thermal stability. An impregnated cathode is used which is arc resistant and has excellent life properties. Mechanical gearing is provided to "gang" the tuners and permit tuning from a single shaft. The 7008 has a waveguide type output which is designed to couple to a modified UG-52A/U choke flange. The output may be pressurized, although no breakdown will occur if pressure is maintained at 1 atmosphere.

The 7008 tuner is designed for high speed motor drives. The tuning shaft may be driven at speeds up to 1500 r.p.m. allowing excursion of the frequency range in approximately 7 seconds. A counter visible from the side of the tube provides an indication of tube frequency.

The 7008 is designed for transmitter service in airborne fire control systems and in missile seeker systems. The tube is useful in ground as well as airborne installations where a high performance X-band power source is required. While the tube is designed for a 0.001 duty cycle, higher duties may be used with reduced peak power output.

ELECTRICAL:

Heater, for Unipotential Cathode:		
Voltage (ac)	13.75	Volts
Current at 13.75 Volts	Min.: 2.8 Max.: 3.5	Amperes
Starting Current	Maximum instantaneous starting current must never exceed 12 amperes.	
Minimum Cathode Heating Time	150	Seconds
Frequency	8500 - 9600	Megacycles
Maximum Frequency Pulling at VSWR of 1.5	15	Megacycles

MECHANICAL:

Mounting Position	Any
Dimensions	See Outline Drawing
Air Flow:	
To fins	An air stream should be directed along the cooling fins toward the body of the tube. Adequate flow should be provided so that the temperature of the anode block does not exceed 150°C.
Cathode Bushing	Oil Immersed or Pressurized⊕
Waveguide Output Flange	Mates with modified JAN UG-52/U
Cathode Connector	The cathode connector should contain a built-in capacitor such as the Jettron No. 9000-C manufactured by Jettron Products, Hanover, New Jersey.
Tuner	Calibrated, with shaft for motor drive.▲
Tuning Torque:	
Tube:	
Room Temperature	15 in. oz. Max.
Extreme Temperature (125°C to −55°C)	20 in. oz. Max.
Equipment: (applied to stops)	32 in. oz. Min., 192 in. oz. Max.
Shaft Speed	1500 r.p.m. Max.
Tuner Backlash■ (before cycling) (rotation of drive shaft)	225° Max.
Tuner Backlash■ (after 5000 cycles) (rotation of drive shaft)	270° Max.
Lubrication†	--
Pressurization of Output	15 psia (Min.) 45 psia (Max.)
Vibration §	5 g, 20 - 500 Cycles
Shock	30 g, 11 Milliseconds
Net Weight (Approx.)	13 Pounds
Shipping Weight	25 Pounds

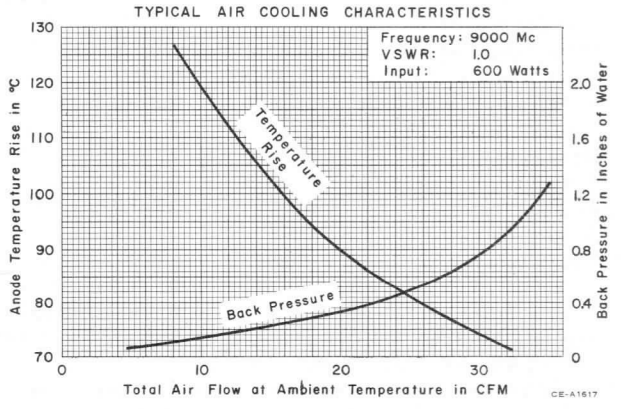

Microwave Devices Section

PULSED OSCILLATOR SERVICE

MAXIMUM AND MINIMUM RATINGS:	Min.	Max.	
Peak Anode Current		32	Amperes
Peak Power Input		630	Kilowatts
Duty		0.0013	--
Pulse Duration		3.3	Microseconds
Rate of Rise of Voltage Pulse (tp> 1.0 μsec)	90	200	kv/μsecond
Rate of Rise of Voltage Pulse (tp< 1.0 μsec)	90	225	kv/μsecond
Anode Block Temperature		150	°C
Cathode Bushing Temperature		165	°C
Load Voltage Standing Wave Ratio		1.5	

Input Pulse Circuitry . . . . . A discharging network type pulser or other type which limits the fault power which could be applied to the magnetron to twice the normal pulse power must be used.

TYPICAL OPERATION WITH LOAD VOLTAGE STANDING WAVE RATIO EQUAL TO OR LESS THAN 1.05 EXCEPT AS NOTED

OSCILLATION 1 WITH DUTY CYCLE OF 0.001

	Min.	Typical	Max.	
Heater Voltage●	--	0	--	Volts
Peak Anode Voltage	20.0	21.5	23.0	Kilovolts
Peak Anode Current	--	27.5	--	Amperes
Pulse Repetition Rate	--	4000	--	cps
Pulse Duration	--	0.25	--	μseconds
RF Bandwidth with worst phasing of 1.5 VSWR	--	4.0	10.0	Megacycles
Side Lobes	8	12	--	dB
Pulling Figure at VSWR of 1.5	--	8	15	Megacycles
Pushing Figure	--	--	0.5	Mc/amp
Thermal Factor for any 30° range between 90° C and 140° C	--	0.20	0.25	Mc/°C
Thermal Drift★	--	10	--	Megacycles
Thermal Drift Time	--	8	--	Minutes
Stability♦ (missing pulses) with worst phasing of 1.5 VSWR	--	0.01	0.25	Per-cent
Peak Power Output	200	230	--	Kilowatts
Partial Moding	--	0.02	--	Per-cent

OSCILLATION 2 WITH DUTY CYCLE OF 0.001

	Min.	Typical	Max.	
Heater Voltage●	--	0	--	Volts
Peak Anode Voltage	20.0	21.0	23.0	Kilovolts
Peak Anode Current	--	27.5	--	Amperes
Pulse Repetition Rate	--	400	--	cps
Pulse Duration	--	2.5	--	μsecond
RF Bandwidth with worst phasing of 1.5 VSWR	--	0.5	1.0	Megacycle
Side Lobes	6	8	--	dB
Pulling Figure of VSWR of 1.5	--	8	15	Megacycles
Pushing Figure	--	--	0.5	Mc/amp
Thermal Factor for any 25° range between 75° C and 125° C	--	0.20	0.25	Mc/°C
Thermal Drift★	--	10	--	Megacycle
Thermal Drift Time	--	8	--	Minutes
Stability♦ (missing pulses) with worst phasing of 1.5 VSWR	--	0.1	0.5	Per-cent
Peak Power Output	200	230	--	Kilowatts
Tuning Stability at 1200 r.p.m. (Arcing while Tuning)	--	0.1	0.5	Per-cent

LIFE TEST

Life Test Cycle□	600	Cycles
Filament Warmup	2.5	Minutes
Oscillation 1	12.5	Minutes
Oscillation 2	12.5	Minutes
Non-Operational	7.5	Minutes
Life Test Failure Criteria (Oscillation 2 Conditions):		
Power	160	KW Min.
Bandwidth	1.25	Mc Max.
Stability	1.0%	Missing Pulses

NOTES

⊕ **No breakdown will occur if pressure is maintained above 600 millimeters of mercury. Air flow must be sufficient to keep bushing below 165 °C.**

▲ Connection to the shaft should be through a flexible coupling. Any connection to the shaft that tends to introduce an axial or radial thrust may reduce the useable life of the tuner.

■ Backlash is defined as the shaft rotation required to accomplish 0.5 mc frequency reversal at any frequency from 8500 mc to 9200 mc.

† The 7008 is factory lubricated and should not require further lubrication. Care should be exercised to keep foreign particles out of the exposed portions of the tuner mechanism. Should further lubrication be desired, Dow Corning Silicone No. 33 Grease should be used on the gears.

§ Special vibration problems encountered with the 7008 should be referred to the Microwave Engineering Dept. Westinghouse Electric Corporation, Elmira, New York. The 7008 has been operationally tested at vibration levels up to 2 g's with vibration frequencies from 20 to 500 cycles per second.

● Heater voltage should be 0 volts for maximum life at 27.5 ma. and 0.001 duty. Higher voltages are permissible but may result in short life.

★ Thermal Drift is the change in frequency from the start of oscillation until thermal equilibrium has been reached.

♦ A pulse is considered missing if its energy content is less than 70% of a normal pulse.

□ Frequency is varied during life test in 200 Mc steps every 50 hours from 8500 to 9600 Mc. The waveguide load is set at a VSWR of 1.5 (min.) and varied continuously through all phases every 15 minutes.

RECOMMENDED HEATER VOLTAGE

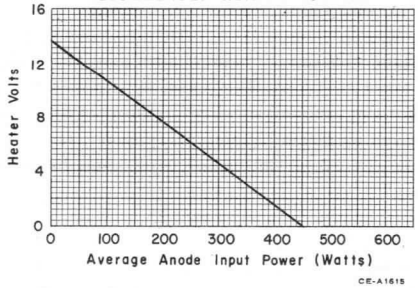

OPERATING RECOMMENDATIONS

MAXIMUM RATINGS:

The maximum ratings given in the data must not be exceeded if the listed performance characteristics are to be realized. The equipment manufacturer must take due precaution to insure that these limits are not exceeded by equipment tolerances or by possible supply voltage variations.

HIGH VOLTAGE PRECAUTIONS:

The high voltage at which the 7008 operates is dangerous to life. Care should be taken to prevent contact of personnel with the high voltage terminals of the tube. The usual method of protecting the personnel is to fasten the tube mounting plate to a grounded metal container large enough to allow insulating space around the cathode bushing. Connections are made to the cathode terminals inside this container and the space around the terminals if filled with an insulating fluid or pressurized. The magnetron anode is also grounded to the container. It is necessary that a low impedance connection exists between the equipment and the mounting plate and anode for proper operation and satisfactory performance.

X-RADIATION:

The 7008 generates X-rays during normal operation. the radiation pattern is shown in Figure 1. Beam #1 is usually absorbed by standard brass waveguide. It may be necessary to shield against beam #2 which is a hollow cone emanating from the cathode stem. These beams are soft (20 KV) but are potentially dangerous to the eyes if viewed continuously.

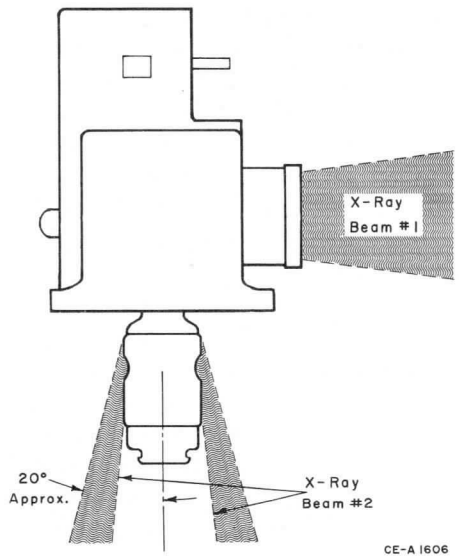

FIGURE 1

MAGNETIC FIELD PRECAUTIONS:

The 7008 is supplied with integral magnets which are factory adjusted to provide proper operation. It is important, therefore, that no magnets or magnetic materials be brought within 4 inches of the tube to prevent demagnetization of the tube magnets.

HANDLING PRECAUTIONS:

The 7008 should be protected against shock when it is handled. The tube is normally supplied with a guard, to protect the cathode bushing, which is removed when the tube is installed. A polyethylene bag is placed over the tuner to prevent dust and other particles from collecting in the gear mechanism. This too must be removed for operation. A dust cover is also provided to keep particles out of the waveguide system as the entrance of particles into the output section will cause arcing and could result in tube destruction.

MOUNTING DIRECTIONS:

The 7008 should be mounted with its weight supported by its mounting flange. The surface should be flat and provide adequate clearance for the cathode. The waveguide output is designed to mate with a modified JAN UG-52A/U flange. The UG-52A/U flange is modified by enlarging the threaded holes to allow entry of 8-32 screws. It is preferable that the waveguide include a flexible section where it is joined to the tube to prevent distortion of the tube output. Before connecting the output to the waveguide, the user should check the window to insure its freedom from dust which could cause arcing.

COOLING:

An air blast should be provided across the fins. This air should be directed to the fins by an appropriate flexible boot for best cooling efficiency. An air flow of 2 pounds/minute at a pressure of 3.0 inches of water should be adequate to maintain the anode temperature below the maximum of 150°C rating. Anode temperature should be measured by contacting the output waveguide where it joins the anode body of the tube. Care should be taken to insure positive contact with the thermocouple. It is usually necessary to scrape a small bit of paint from the magnetron for this measurement.

STARTING:

When starting a tube for the first time, a heater voltage of 13.75 volts should be applied for 2.5 minutes. Care must be taken to limit the starting surge current to 12 amperes max. Normal heater current at this voltage is between 2.8 and 3.5 amperes. This will allow the cathode to reach operating temperature and the getter to become operative. Pulse power in the form of negative pulses may be applied to the cathode. If instability due to arcing occurs, it may be necessary to season the tube by operating at reduced power for 10 minutes. Normally the heater should be reduced to 0 volts immediately after application of full rated operating voltages. When operating conditions are reached, back bombardment of the cathode occurs which tends to raise the cathode temperature, necessitating the reduction in heater voltage. The heater should be protected from the pulse power by placing a suitable capacitor across the heater terminals. The Jettron No. 9000-C connector or equivalent is recommended for this purpose. It is important to attach the anode circuit return to the cathode terminal to prevent heater burn-out.

THERMAL STABILIZATION:

As the anode block warms up, the cavities increase in size, causing a drop in frequency. Since the tuners contact the anode block, thermal equilibrium is fast and drift is low. This is an outstanding advantage of this tube over pin-tuned magnetrons. The time required for stabilization is shown in Figure 2.

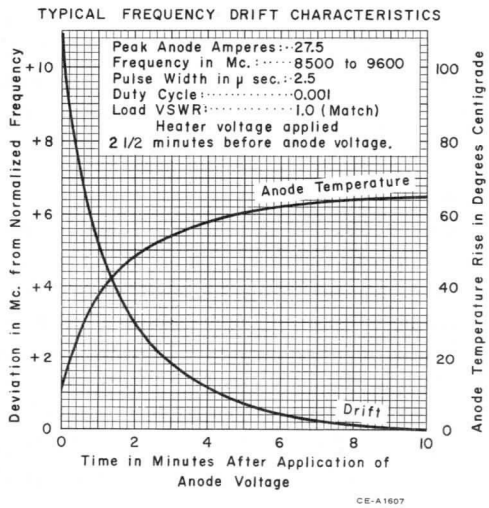

FIGURE 2

EQUIPMENT:

For best operation of the 7008, it is important that the voltage and current pulses be carefully shaped. The voltage rise times indicated in the data must be rigorously adhered to. The current and voltage pulses appear in time phase in Figure 3.

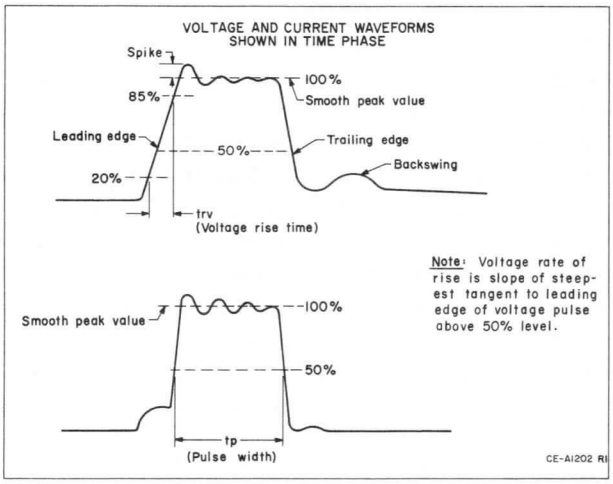

FIGURE 3

The pulse width is determined by the width of the current pulse at the 50% amplitude level. Measurement of pulse width using the r-f envelope is not recommended. The ripple on the top of the current pulse should have a peak to peak amplitude less than 10 percent of the smooth peak value. A sloping pulse is also objectionable. Either of these conditions may result in poor spectra especially under 2.5 microsecond operation. The trailing edge is more important on shorter pulse widths and will contribute to poor spectra if excessive. Voltage spike should not exceed 10%. The backswing should be maintained at a level low enough to prevent the tube from breaking back into oscillation again. This could result in increased system noise. The proper measurement of the voltage and current pulses is very important. It is not sufficient to measure the voltage pulse alone since a magnetron tends to be a constant voltage device and will appear to smooth out an otherwise poor pulse. A modulator is shown schematically in Figure 4 with location of voltage and current viewers indicated.

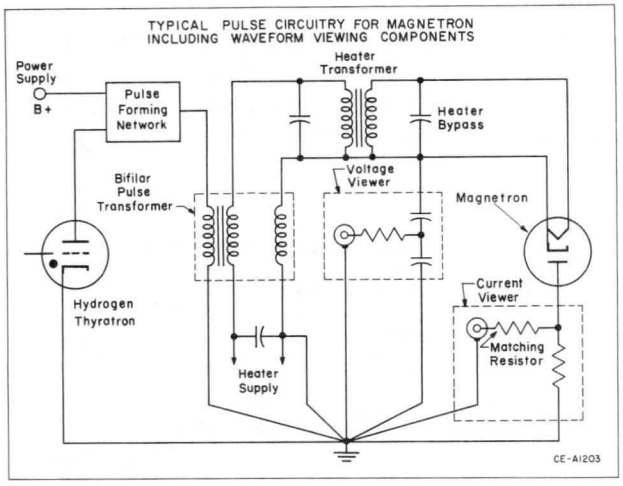

FIGURE 4

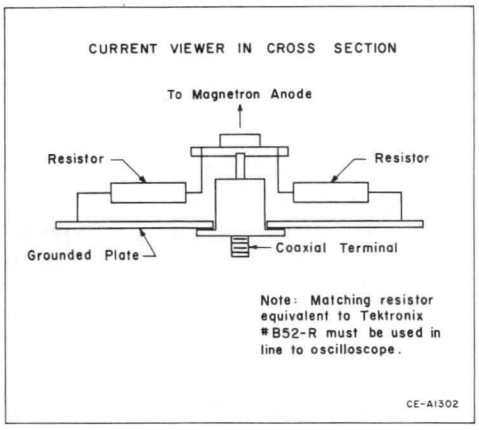

FIGURE 5

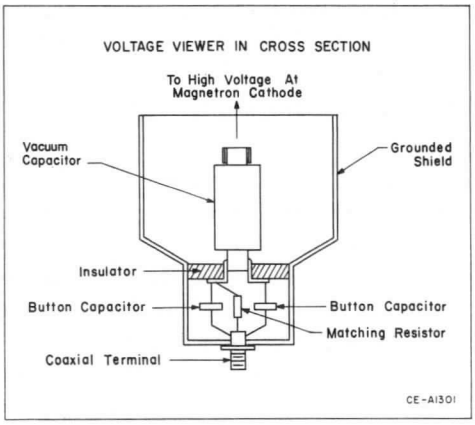

FIGURE 6

A suitable voltage viewer is a capacitor divider having a shunt capacity less than 6 micromicrofarads shielded as shown in Figure 5.

For current viewing, a resistor with a value of about 7.5 ohms should be used. It should consist of a number of carbon resistors mounted radially as shown in Figure 6. Best results are obtained if these pulses are fed directly to the deflection plates of an oscilloscope.

The 7008 should be operated with a well matched load. Tube life and reliability will be increased if the line is well matched. As shown in the data, a maximum VSWR of 1.5 is permitted. Under these conditions a life of 250 anode hours minimum may be expected. Typical life is considerably longer. Changes in the operation of the 7008 occur under operation with a mismatch. The operating region of highest power is called the "sink" and represents the highest coupling to the magnetron. Under these conditions the r-f spectrum will tend to broaden and side lobes will tend to grow. This is especially true at 2.5 microsecond operation. When the phase of the VSWR is changed to move the operation into the low power region (anti-sink) the magnetron may tend to show signs of instability. This may take the form of arcing and an increase in missing pulses. This results because the magnetron has been unloaded and the r-f voltages inside the magnetron are increased, making internal r-f discharges more likely.

A second problem encountered with tunable magnetrons involves the distance between the mismatch and the tube flange. This is known as the "long lines" effect and is an additional limit on the VSWR that is permitted in the load as shown in Figure 7. If the

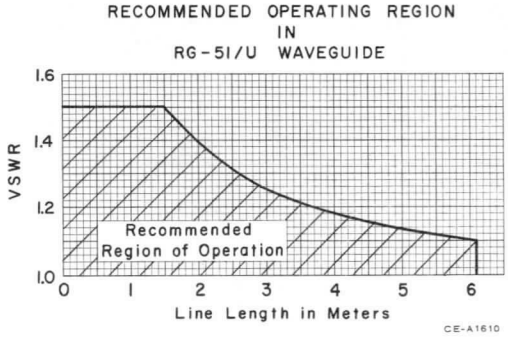

FIGURE 7

load presents a high VSWR at a sufficient distance from the tube, discontinuities in the magnetron tuning characteristic may result. This can be avoided by using a short system or by keeping the VSWR low. The use of a ferrite isolator with the 7008 provides a convenient solution of the problem.

PERFORMANCE:

Typical performance charts for the 7008 are shown in Figure 8 . The volt-ampere characteristics of the

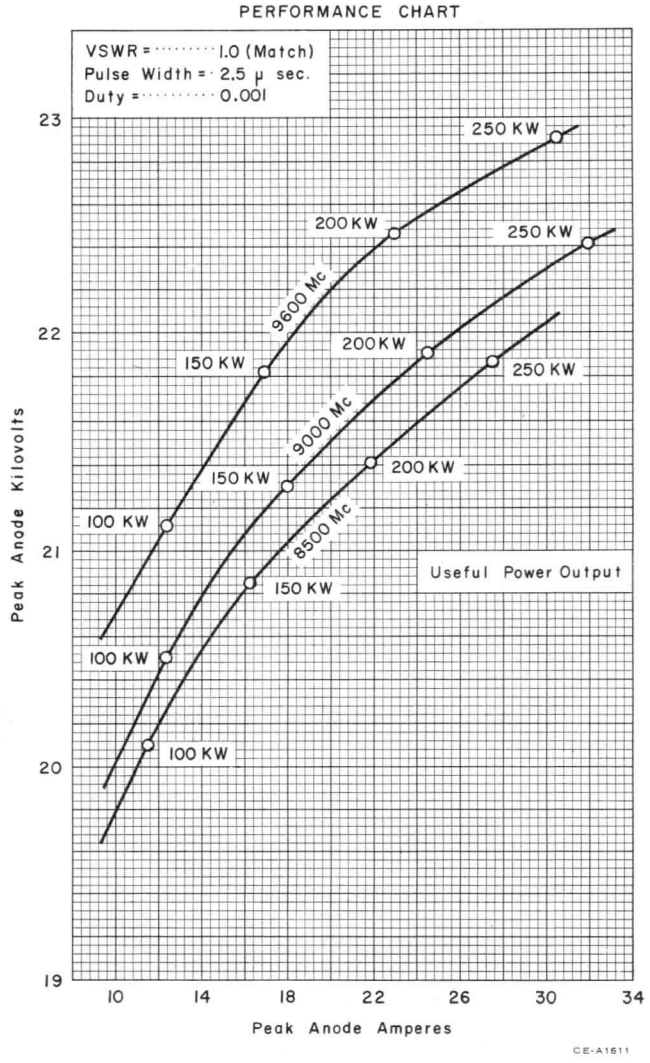

FIGURE 8

tube are shown with power output indicated with circles. The curves vary depending on the condition of the load and the tube frequency.

PUSHING:

One of the important advantages of the 7008 is the smooth pushing characteristics obtained with coupled cavity tuning. These characteristics vary from the typical curves shown in Figure 9 but always retain

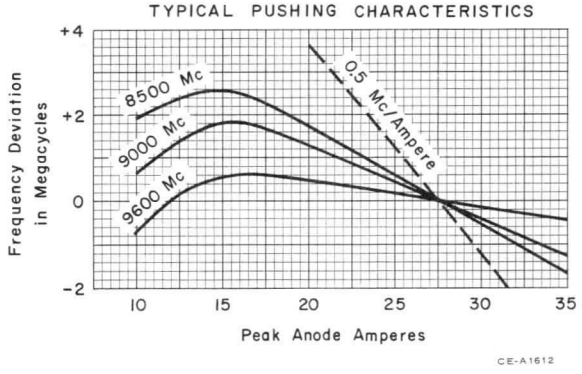

FIGURE 9

their linear nature and the shown frequency relationship. This makes the tube relatively insensitive to operating point and permits greater latitude in pulse shape than would be permitted with sharply varying pushing characteristics.

PARTIAL MODING:

When the 7008 is operated at high voltage rate-of-rises, the tube may exhibit jitter at the start of oscillations. This jitter is caused by a brief oscillation in a mode other than the normal π –mode during the leading edge of the applied voltage pulse. The use of high voltage rate-of-rises is undesirable from a basic viewpoint of magnetron physics since it tends to favor the undesirable mode. The 7008 is specifically designed to resist moding of this nature.

CATHODE MEMORY:

Many magnetrons exhibit a tendency to become unstable when operated on longer pulse widths immediately after lengthy operation on short pulse widths. This phenomenon is caused by the build-up of emitting materials on portions of the cathode structure which are not designed to be emitting surfaces. Longer pulse operation permits time for breakdown to occur which is enhanced by the presence of emission products from the cathode. The 7008 is designed to resist these processes. The resistance to "cathode memory" is checked with the following life test:

Cycle	Anode Current	Pulse Width	Time	Heater Voltage
1	0	- -	2.5 min.	13.75 V
2	27.5	.25 μsec	7 hours	0
3	27.5	2.5 μsec	1 hour	0
4	27.5	.25 μsec	15 hours	0
5	27.5	2.5 μsec	1 hour	0

repeat 2-5 for 250 total hours

Failure criteria for this test involves the ability of the tube and equipment to remain operable at the 27.5 amp level or at a reduced 22.5 amp level. The 7008 has demonstrated ability to remain sufficiently stable to pass this test.

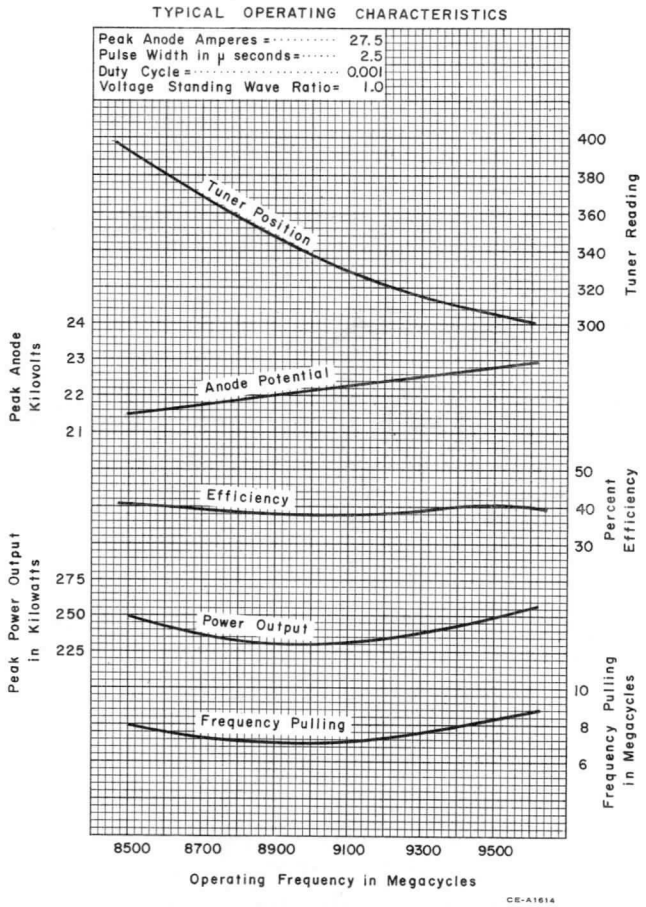

TUNING:

The 7008 is particularly well suited for rapid tuning with motor drive systems. Tuning is accomplished by driving a shaft which moves a gear train. A counter gives an indication of the magnetron frequency. The gear train drives the ring gear and individual tuners through a carefully constructed thread drive. Speeds up to 1500 R.P.M. are permitted on the shaft which allow excursion of the frequency band (8500 to 9600 M.C.) in approximately 7 seconds. No appreciable wear should be expected in 5000 complete excursions (8500 to 9600 M.C. and return) at the highest speed permitted.

NOTES FOR OUTLINE DRAWING

1: Reference plane A is defined as the plane through that portion of the mounting flange designated as annular surface D. Reference plane B is defined as the plane which is perpendicular to plane A and passes thru the exact centers of mounting flange holes number 2 and number 3. Reference plane C is defined as the plane which is perpendicular to plane A and plane B and passes thru the exact center of mounting flange holes number 3 and number 4.

2: Surfaces D and E of the waveguide output flange and the mounting flange are made so that they may be used to provide a hermetic seal. This surface shall be flat within 0.015 TIR with a surface roughness of 32 per MIL-STD-10.

3: The axis of the heater-cathode terminal will be within the confines of a cylinder whose radius is 3/64 inch and whose axis is perpendicular to reference plane A at the specified location.

4: Allpoints on mounting flange other than specified in Note 1 must lie within 0.015 inch above or below reference plane A.

5: The limits include angular as well as lateral deviations.

6: These dimensions define extremities of the 0.169 inch internal diameter of the cylindrical heater-terminal.

7: These dimensions define extremities of the 0.540 inch internal diameter of the cylindrical heater-cathode terminal.

8: No part of the connector device for the heater and heater-cathode terminals should bear against the underside of this lip.

OUTLINE DRAWING

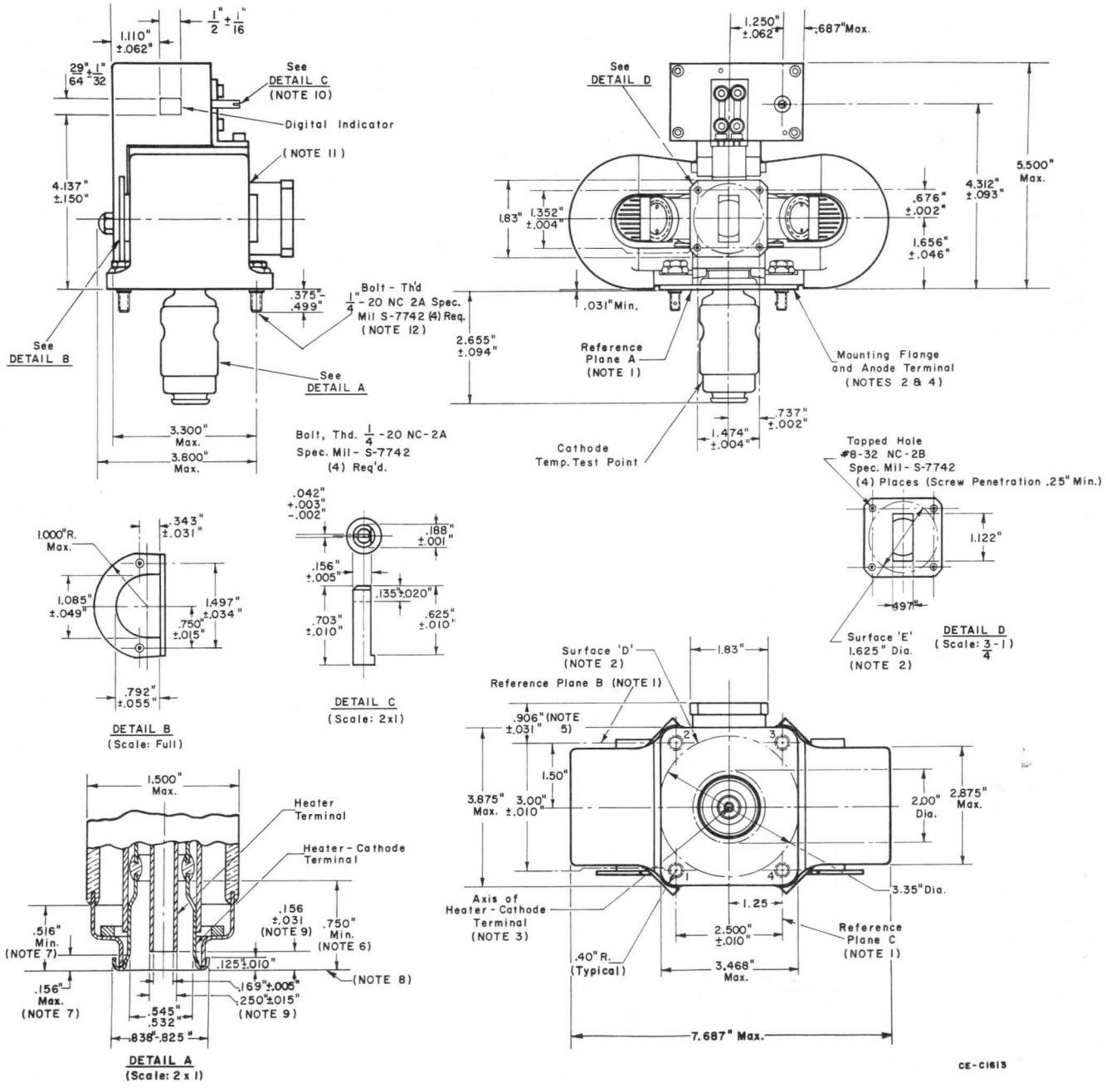

OUTLINE DRAWING NOTES CONTINUED FROM PAGE 7

9: The heater terminal and the heater-cathode terminal are concentric within 0.010 inch.

10: Clockwise rotation of the drive shaft as viewed towards the output flange decreases frequency.

11: Anode temperature to be measured at junction of waveguide and anode block.

12: Nylock located 3 threads from bolt end, bolt material; non-magnetic.

The information contained herein is supplied without assuming responsibility for infringement of patents or other rights of third parties which may result from its use. No license is granted by implication or otherwise under any patent or patent rights of Westinghouse Electric Corporation.

LOAD (RIEKE) DIAGRAMS FOR TYPES 7008 AND 7111

Load Diagrams (Rieke) These diagrams show the performance of the magnetron as out put conditions are varied. Performance to a VSWR of 2.5 is plotted but operation above 1.5 is not recommended. The true Rieke diagram is plotted in the admittance plane rather than in polar coordinates as shown.

RIEKE DIAGRAM AT 8500 MEGACYCLES

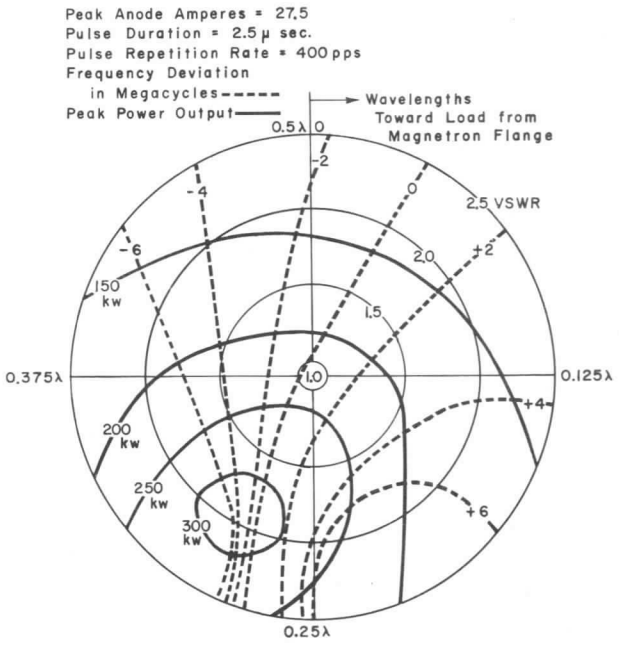

CE-A1608

RIEKE DIAGRAM AT 9000 MEGACYCLES

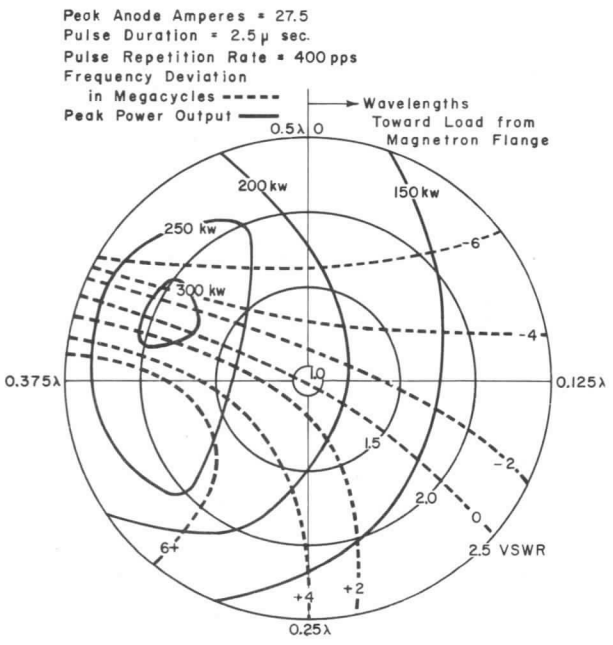

CE-A1609

RIEKE DIAGRAM AT 9600 MEGACYCLES

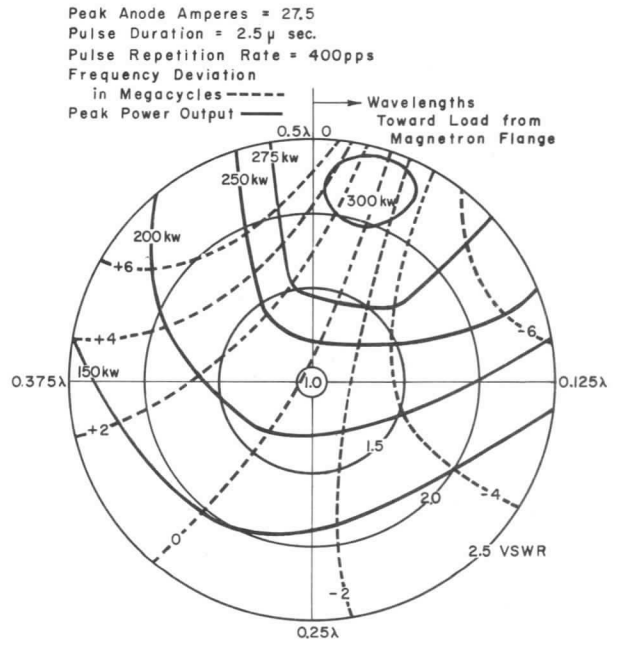

CE-A1662

August 15, 1962

MAGNETRON TYPE 7111

Hand Tunable with Lock
8500-9600 M.C.

Forced Air Cooled
Integral Magnet

230 KW Peak
Power Output

The 7111 is a tunable X-band magnetron. It is designed to serve as a pulse oscillator at frequencies between 8500 and 9600 megacycles per second. Its tuner design allows frequency to be set at any desired frequency and locked in place.

The 7111 has a typical power output of approximately 230 kilowatts over its entire frequency range. Pulse widths up to 3.3 microseconds may be used. Thermal drift is typically 10 megacycles, even at the extremes of the frequency range. The 7111 provides excellent spectrum shape and excellent stability of operation.

Structurally, the 7111 employs a double strapped, vane type anode. Tuning is accomplished by contacting plungers in four tuner cavities which are tightly coupled to the main resonator system. Tuning is therefore accomplished remote from the interaction space and in low field areas of the tube, greatly improving both electrical and thermal stability. An impregnated cathode is used which is arc resistant and has excellent life properties. Mechanical gearing is provided to "gang" the tuners and permit tuning from a single shaft. The 7111 has a waveguide type output which is designed to couple to a modified UG-52A/U choke flange. The output may be pressurized, although no breakdown will occur if pressure is maintained at 1 atmosphere.

The 7111 tuner is designed for hand tuning. A lock nut is provided which may be tightened after the desired frequency is reached. A calibrated micrometer-type dial provides an indication of tube frequency.

The 7111 is designed for transmitter service in airborne fire control systems and in missile seeker systems. The tube is useful in ground as well as airborne installations where a high performance X-band power source is required. While the tube is designed for a 0.001 duty cycle, higher duties may be used with reduced peak power output. The 7111 is designed to replace the fixed-tuned 4J50 series magnetrons.

ELECTRICAL:

Heater, for Unipotential Cathode:		
Voltage (ac)	13.75	Volts
Current at 13.75 Volts	Min.: 2.8 Max.: 3.5	Amperes
Starting Current	Maximum instantaneous starting current must never exceed 12 amperes.	
Minimum Cathode Heating Time	150	Seconds
Frequency	8500-9600	Megacycles
Maximum Frequency Pulling at VSWR of 1.5	15	Megacycles

MECHANICAL:

Mounting Position	Any
Dimensions	See Outline Drawing
Air Flow:	
To fins	An air stream should be directed along the cooling fins toward the body of the tube. Adequate flow should be provided so that the temperature of the anode block does not exceed 150°C.
Cathode Bushing	Oil Immersed or Pressurized⊕
Waveguide Output Flange	Mates with modified JAN UG-52/U
Cathode Connector	The cathode connector should contain a built-in capacitor such as the Jettron No. 9000-C manufactured by Jettron Products, Hanover, New Jersey.
Tuner	Calibrated with Lock Nut
Tuning Torque:	
Tube:	
Room Temperature	150 in. oz. Max.
Extreme Temperature (125° C to −55° C)	200 in. oz. Max.
Equipment (applied to stops)	200 in. oz. Max.
Tuner Backlash■	20 Megacycles Max.
Lubrication†	
Pressurization of Output	15 psia (Min.) 45 psia (Max.)
Vibration §	5 g's 20 – 500 Cycles
Shock	30 g's, 11 Milliseconds
Net Weight (Approx.)	12 Pounds
Shipping Weight	25 Pounds

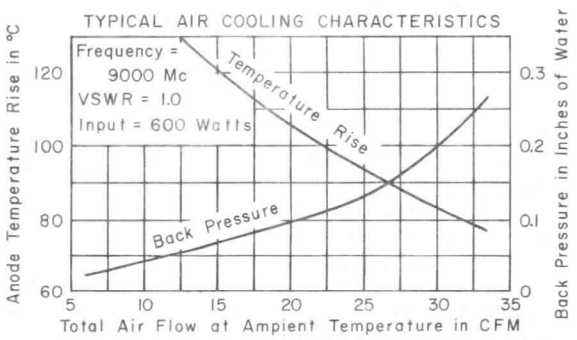

PULSED OSCILLATOR SERVICE

MAXIMUM AND MINIMUM RATINGS:	Min.	Max.	
Peak Anode Current		32	Amperes
Peak Power Input		630	Kilowatts
Duty		0.0013	--
Pulse Duration		3.3	Microseconds
Rate of Rise of Voltage Pulse (tp > 1.0 μsec)	90	180	kv/μsecond
Rate of Rise of Voltage Pulse (tp < 1.0 μsec)	90	200	kv/μsecond
Anode Block Temperature		150	°C
Cathode Bushing Temperature		165	°C
Load Voltage Standing Wave Ratio		1.5	

Input Pulse Circuitry . . . . . A discharging network type pulser or other type which limits the fault power which could be applied to the magnetron to twice the normal pulse power must be used.

TYPICAL OPERATION WITH LOAD VOLTAGE STANDING WAVE RATIO EQUAL TO OR LESS THAN 1.05 EXCEPT AS NOTED

OSCILLATION 1 WITH DUTY CYCLE OF 0.001

	Min.	Typical	Max.	
Heater Voltage●	--	0	--	Volts
Peak Anode Voltage	20.0	21.5	23.0	Kilovolts
Peak Anode Current	--	27.5	--	Amperes
Pulse Repetition Rate	--	4000	--	cps
Pulse Duration	--	0.25	--	μseconds
RF Bandwidth with worst phasing of 1.5 VSWR	--	4.0	10.0	Megacycles
Side Lobes	8	12	--	dB
Pulling Figure at VSWR of 1.5	--	8	15	Megacycles
Pushing Figure	--	--	0.5	Mc/amp
Thermal Factor for any 30° range between 90° C and 140° C	--	0.20	0.25	Mc/°C
Thermal Drift★	--	10	--	Megacycles
Thermal Drift Time	--	8	--	Minutes
Stability♦ (missing pulses) with worst phasing of 1.5 VSWR	--	0.01	0.25	Per-cent
Peak Power Output	200	230	--	Kilowatts

OSCILLATION 2 WITH DUTY CYCLE OF 0.001

	Min.	Typical	Max.	
Heater Voltage●	--	0	--	Volts
Peak Anode Voltage	20.0	21.0	23.0	Kilovolts
Peak Anode Current	--	27.5	--	Amperes
Pulse Repetition Rate	--	400	--	cps
Pulse Duration	--	2.5	--	μsecond
RF Bandwidth with worst phasing of 1.5 VSWR	--	0.5	1.0	Megacycle
Side Lobes	6	8	--	dB
Pulling Figure of VSWR of 1.5	--	8	15	Megacycles
Pushing Figure	--	--	0.5	Mc/amp
Thermal Factor for any 25° range between 75° C and 125° C	--	0.20	0.25	Mc/°C
Thermal Drift★	--	10	--	Megacycle
Thermal Drift Time	--	8	--	Minutes
Stability♦ (missing pulses) with worst phasing of 1.5 VSWR	--	0.1	0.5	Per-cent
Peak Power Output	200	230	--	Kilowatts
Frequency Modulation during Vibration 2 g's 20 – 500 cycles	--	--	± 0.5	Megacycle

LIFE TEST

Life Test Cycle□	480	Cycles
Filament Warmup	2.5	Minutes
Oscillation 1	25	Minutes
Oscillation 2	25	Minutes
Non-Operational	7.5	Minutes

Life Test Failure Criteria (Oscillation 2 Conditions):

Power	160	KW Min.
Bandwidth	1.25	Mc Max.
Stability	1.0%	Missing Pulses

NOTES

⊕ **No breakdown will occur if pressure is maintained above 600 millimeters of mercury. Air flow must be sufficient to keep bushing below 165 °C.**

■ Backlash is defined as the difference in frequency when a given dial setting is approached in either direction of rotation.

† The 7111 is factory lubricated and should not require further lubrication. Care should be exercised to keep foreign particles out of the exposed portions of the tuner mechanism. Should further lubrication be desired, Dow Corning Silicone No. 33 Grease should be used on the gears.

§ Special vibration problems encountered with the 7111 should be referred to the Microwave Engineering Dept. Westinghouse Electric Corporation, Elmira, New York. The 7111 has been operationally tested at vibration levels up to 2 g's with vibration frequencies from 20 to 500 cycles per second.

● Heater voltage should be 0 volts for maximum life at 27.5 ma. and 0.001 duty. Higher voltages are permissible but may result in short life.

★ Thermal Drift is the change in frequency from the start of oscillation until thermal equilibrium has been reached.

♦ A pulse is considered missing if its energy content is less than 70% of a normal pulse.

□ Frequency is varied during life test in 200 Mc steps every 50 hours from 8500 to 9600 Mc. The waveguide load is set at a VSWR of 1.5 (min.) and varied continuously through all phases every 15 minutes.

RECOMMENDED HEATER VOLTAGE

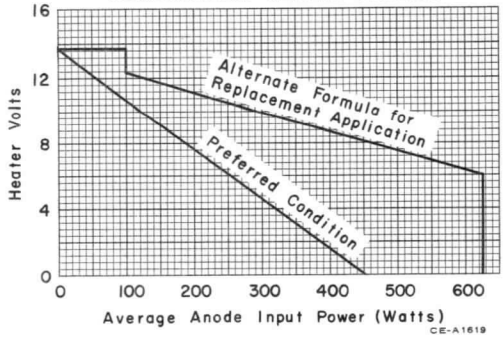

OPERATING RECOMMENDATIONS

MAXIMUM RATINGS:

The maximum ratings given in the data must not be exceeded if the listed performance characteristics are to be realized. The equipment manufacturer must take due precaution to insure that these limits are not exceeded by equipment tolerances or by possible supply voltage variations.

HIGH VOLTAGE PRECAUTIONS:

The high voltage at which the 7111 operates is dangerous to life. Care should be taken to prevent contact of personnel with the high voltage terminals of the tube. The usual method of protecting the personnel is to fasten the tube mounting plate to a grounded metal container large enough to allow insulating space around the cathode bushing. Connections are made to the cathode terminals inside this container and the space around the terminals if filled with an insulating fluid or pressurized. The magnetron anode is also grounded to the container. It is necessary that a low impedance connection exists between the equipment and the mounting plate and anode for proper operation and satisfactory performance.

X-RADIATION:

The 7111 generates X-rays during normal operation. the radiation pattern is shown in Figure 1. Beam #1 is usually absorbed by standard brass waveguide. It may be necessary to shield against beam #2 which is a hollow cone emanating from the cathode stem. These beams are soft (20 KV) but are potentially dangerous to the eyes if viewed continuously.

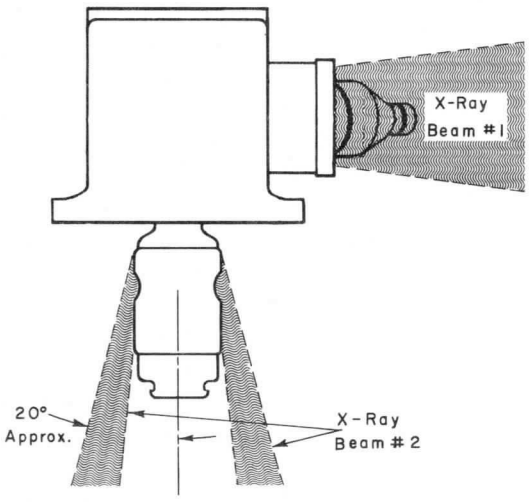

FIGURE 1

MAGNETIC FIELD PRECAUTIONS:

The 7111 is supplied with integral magnets which are factory adjusted to provide proper operation. It is important, therefore, that no magnets or magnetic materials be brought within 4 inches of the tube to prevent demagnetization of the tube magnets.

HANDLING PRECAUTIONS:

The 7111 should be protected against shock when it is handled. The tube is normally supplied with a guard, to protect the cathode bushing, which is removed when the tube is installed. A polyethylene bag is placed over the tuner to prevent dust and other particles from collecting in the gear mechanism. This too must be removed for operation. A dust cover is also provided to keep particles out of the waveguide system as the entrance of particles into the output section will cause arcing and could result in tube destruction.

MOUNTING DIRECTIONS:

The 7111 should be mounted with its weight supported by its mounting flange. The surface should be flat and provide adequate clearance for the cathode. The waveguide output is designed to mate with a modified JAN UG-52A/U flange. The UG-52A/U flange is modified by enlarging the threaded holes to allow entry of 8-32 screws. It is preferable that the waveguide include a flexible section where it is joined to the tube to prevent distortion of the tube output. Before connecting the output to the waveguide, the user should check the window to insure its freedom from dust which could cause arcing.

COOLING:

An air blast should be provided across the fins. This air should be directed to the fins by an appropriate flexible boot for best cooling efficiency. An air flow of 2 pounds/minute at a pressure of 3.0 inches of water should be adequate to maintain the anode temperature below the maximum of 150°C rating. Anode temperature should be measured by contacting the output waveguide where it joins the anode body of the tube. Care should be taken to insure positive contact with the thermocouple. It is usually necessary to scrape a small bit of paint from the magnetron for this measurement.

STARTING:

When starting a tube for the first time, a heater voltage of 13.75 volts should be applied for 2.5 minutes. Care must be taken to limit the starting surge current to 12 amperes max. Normal heater current at this voltage is between 2.8 and 3.5 amperes. This will allow the cathode to reach operating temperature and the getter to become operative. Pulse power in the form of negative pulses may be applied to the cathode. If instability due to arcing occurs, it may be necessary to season the tube by operating at reduced power for 10 minutes. Normally the heater should be reduced to 0 volts immediately after application of full rated operating voltages. When operating conditions are reached, back bombardment of the cathode occurs which tends to raise the cathode temperature, necessitating the reduction in heater voltage. The heater should be protected from the pulse power by placing a suitable capacitor across the heater terminals. The Jettron No. 9000-C connector or equivalent is recommended for this purpose. It is important to attach the anode circuit return to the cathode terminal to prevent heater burn-out.

THERMAL STABILIZATION:

As the anode block warms up, the cavities increase in size, causing a drop in frequency. Since the tuners contact the anode block, thermal equilibrium is fast and drift is low. This is an outstanding advantage of this tube over pin-tuned magnetrons. The time required for stabilization is shown in Figure 2.

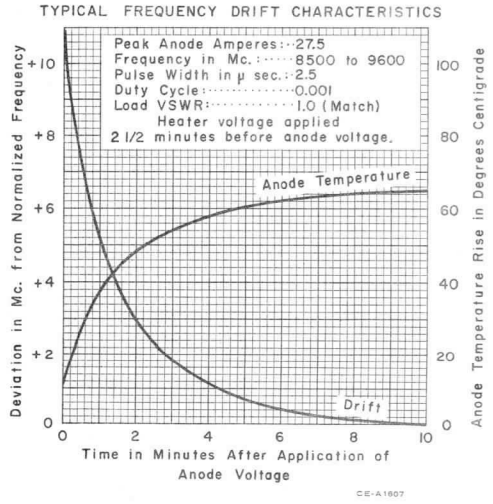

FIGURE 2

EQUIPMENT:

For best operation of the 7111, it is important that the voltage and current pulses be carefully shaped. The voltage rise times indicated in the data must be rigorously adhered to. The current and voltage pulses appear in time phase in Figure 3.

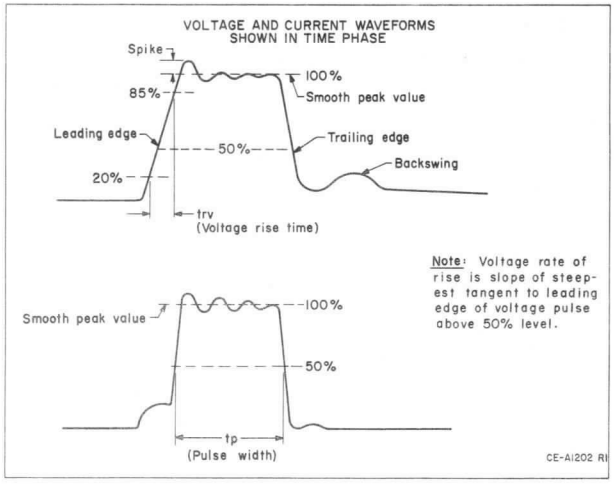

FIGURE 3

The pulse width is determined by the width of the current pulse at the 50% amplitude level. Measurement of pulse width using the r-f envelope is not recommended. The ripple on the top of the current pulse should have a peak to peak amplitude less than 10 percent of the smooth peak value. A sloping pulse is also objectionable. Either of these conditions may result in poor spectra especially under 2.5 microsecond operation. The trailing edge is more important on shorter pulse widths and will contribute to poor spectra if excessive. Voltage spike should not exceed 10%. The backswing should be maintained at a level low enough to prevent the tube from breaking back into oscillation again. This could result in increased system noise. The proper measurement of the voltage and current pulses is very important. It is not sufficient to measure the voltage pulse alone since a magnetron tends to be a constant voltage device and will appear to smooth out an otherwise poor pulse. A modulator is shown schematically in Figure 4 with location of voltage and current viewers indicated.

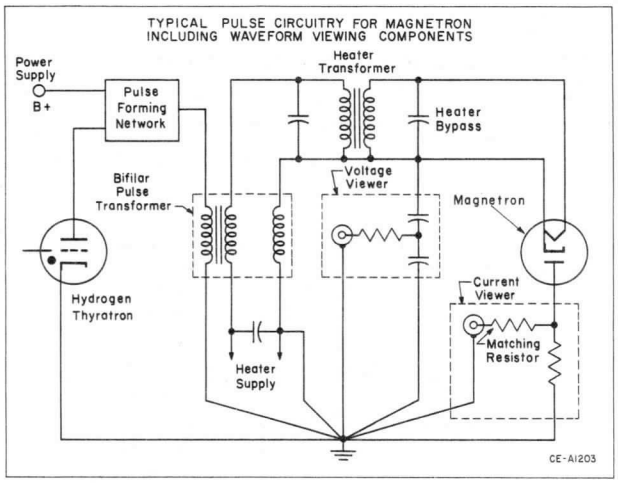

FIGURE 4

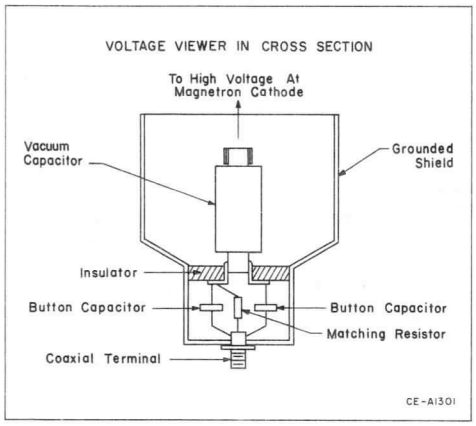

FIGURE 5

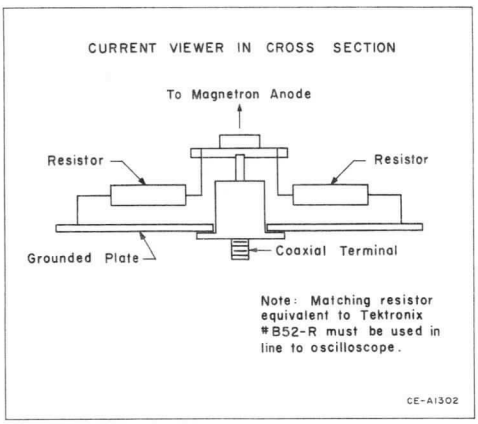

FIGURE 6

A suitable voltage viewer is a capacitor divider having a shunt capacity less than 6 micromicrofarads shielded as shown in Figure 5.

For current viewing, a resistor with a value of about 7.5 ohms should be used. It should consist of a number of carbon resistors mounted radially as shown in Figure 6. Best results are obtained if these pulses are fed directly to the deflection plates of an oscilloscope.

The 7111 should be operated with a well matched load. Tube life and reliability will be increased if the line is well matched. As shown in the data, a maximum VSWR of 1.5 is permitted. Under these conditions a life of 250 anode hours minimum may be expected. Typical life is considerably longer. Changes in the operation of the 7111 occur under operation with a mismatch. The operating region of highest power is called the "sink" and represents the highest coupling to the magnetron. Under these conditions the r-f spectrum will tend to broaden and side lobes will tend to grow. This is especially true at 2.5 microsecond operation. When the phase of the VSWR is changed to move the operation into the low power region (anti-sink) the magnetron may tend to show signs of instability. This may take the form of arcing and an increase in missing pulses. This results because the magnetron has been unloaded and the r-f voltages inside the magnetron are increased, making internal r-f discharges more likely.

A second problem encountered with tunable magnetrons involves the distance between the mismatch and the tube flange. This is known as the "long lines" effect and is an additional limit on the VSWR that is permitted in the load as shown in Figure 7. If the

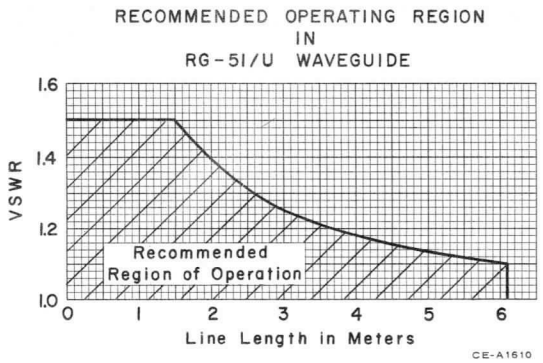

FIGURE 7

load presents a high VSWR at a sufficient distance from the tube, discontinuities in the magnetron tuning characteristic may result. This can be avoided by using a short system or by keeping the VSWR low. The use of a ferrite isolator with the 7111 provides a convenient solution of the problem.

PERFORMANCE:

Typical performance charts for the 7111 are shown in Figure 8 . The volt-ampere characteristics of the

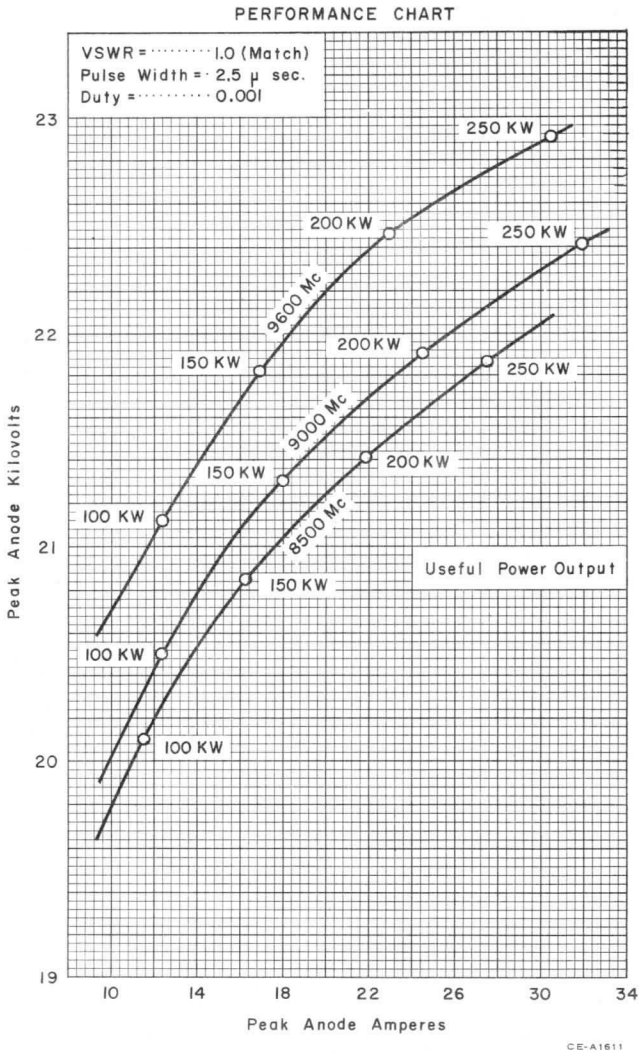

FIGURE 8

tube are shown with power output indicated with circles. The curves vary depending on the condition of the load and the tube frequency.

PUSHING:

One of the important advantages of the 7111 is the smooth pushing characteristics obtained with coupled cavity tuning. These characteristics vary from the typical curves shown in Figure 9 but always retain

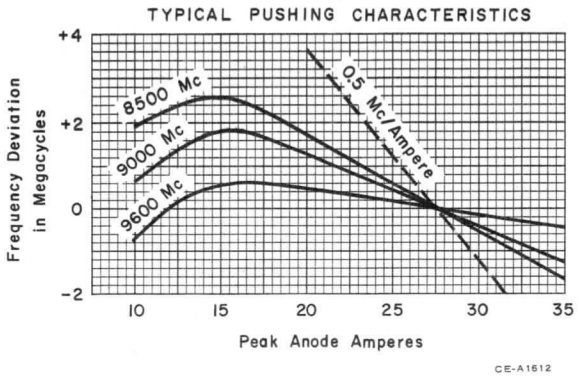

FIGURE 9

their linear nature and the shown frequency relationship. This makes the tube relatively insensitive to operating point and permits greater latitude in pulse shape than would be permitted with sharply varying pushing characteristics.

TYPICAL OPERATING CHARACTERISTICS

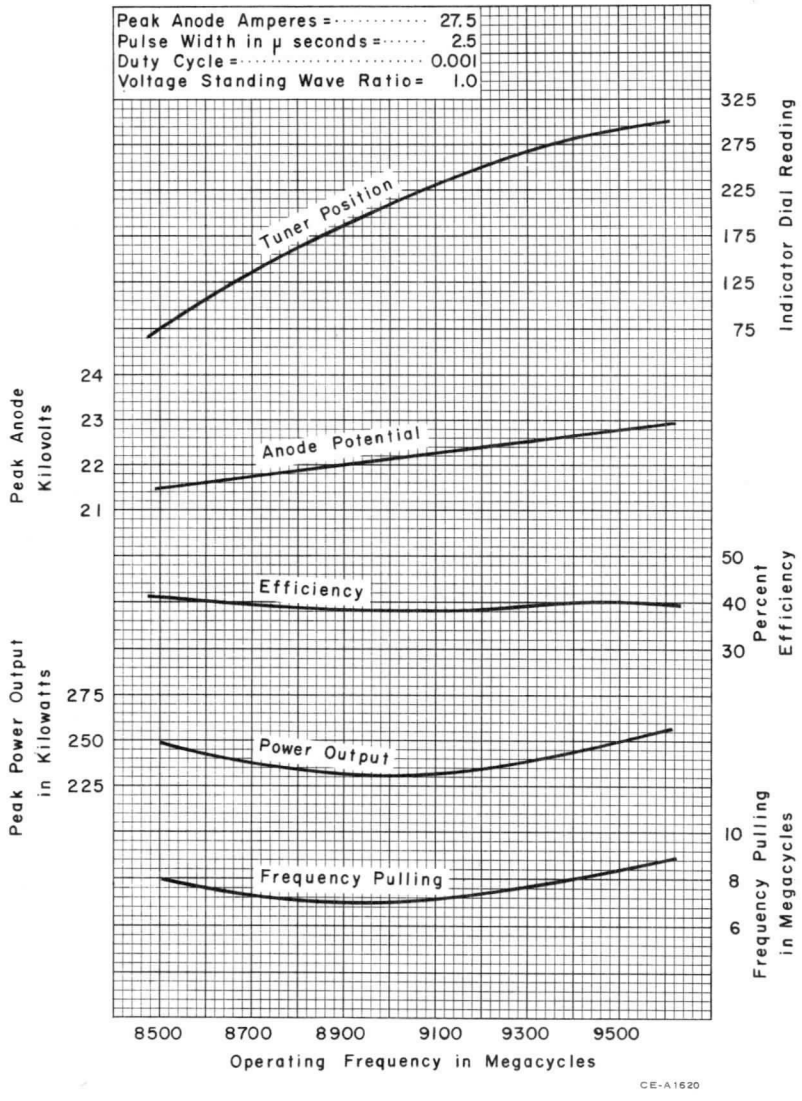

NOTES FOR OUTLINE DRAWING

1: Reference plane A is defined as the plane through that portion of the mounting flange designated as annular surface D. Reference plane B is defined as the plane which is perpendicular to plane A and passes thru the exact centers of mounting flange holes number 2 and number 3. Reference plane C is defined as the plane which is perpendicular to plane A and plane B and passes thru the exact center of mounting flange holes number 3 and number 4.

2: Surfaces D and E of the waveguide output flange and the mounting flange are made so that they may be used to provide a hermetic seal. This surface shall be flat within 0.015 TIR with a surface roughness of 32 per MIL-STD-10.

3: The axis of the heater-cathode terminal will be within the confines of a cylinder whose radius is 3/64 inch and whose axis is perpendicular to reference plane A at the specified location.

4: Allpoints on mounting flange other than specified in Note 1 must lie within 0.015 inch above or below reference plane A.

5: The limits include angular as well as lateral deviations.

6: These dimensions define extremities of the 0.169 inch internal diameter of the cylindrical heater-terminal.

7: These dimensions define extremities of the 0.540 inch internal diameter of the cylindrical heater-cathode terminal.

8: No part of the connector device for the heater and heater-cathode terminals should bear against the underside of this lip.

OUTLINE DRAWING

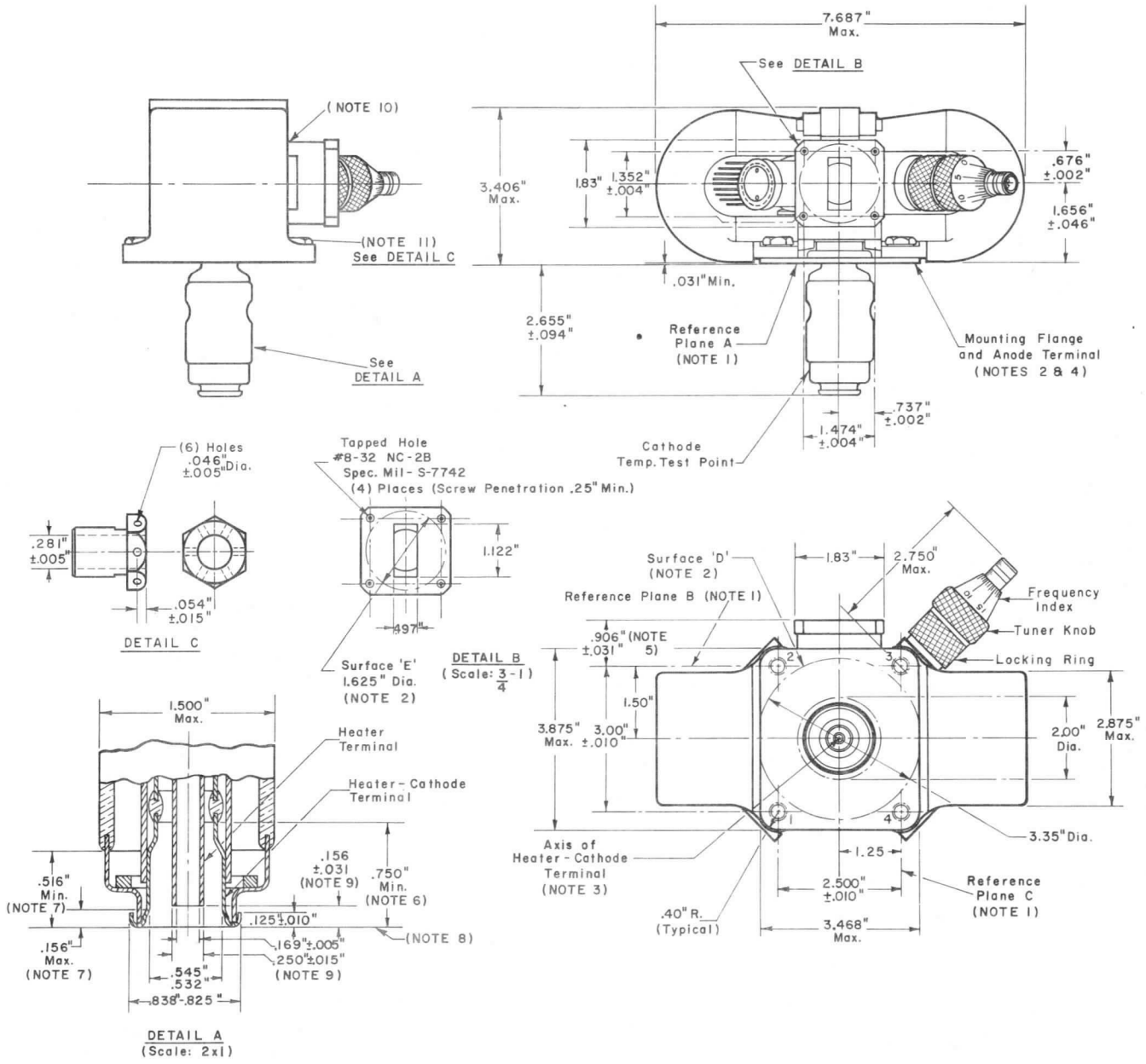

OUTLINE DRAWING NOTES CONTINUED FROM PAGE 7

9: The heater terminal and the heater-cathode terminal are concentric within 0.010 inch.

10: Anode temperature shall be measured at junction of waveguide and anode back.

11: A 1-3/32" minimum long stud thru the mounting holes shall not interfere with any part of the tube.

The information contained herein is supplied without assuming responsibility for infringement of patents or other rights of third parties which may result from its use. No license is granted by implication or otherwise under any patent or patent rights of Westinghouse Electric Corporation.

MAGNETRON TYPE 7541

Hand Tunable with Lock
8500-9600 M.C.

Forced Air Cooled
Integral Magnet

250 KW Peak
Power Output

The 7541 is a tunable X-band magnetron. It is designed to serve as a pulse oscillator at frequencies between 8500 and 9600 megacycles per second. Its tuner design allows frequency to be set at any desired frequency and locked in place.

The 7541 has a typical power output of approximately 250 kilowatts over its entire frequency range. Pulse widths up to 1.1 microseconds may be used. Thermal drift is typically 10 megacycles, even at the extremes of the frequency range. The 7541 provides excellent spectrum shape and excellent stability of operation.

Structurally, the 7541 employs a double strapped, vane type anode. Tuning is accomplished by contacting plungers in four tuner cavities which are tightly coupled to the main resonator system. Tuning is therefore accomplished remote from the interaction space and in low field areas of the tube, greatly improving both electrical and thermal stability. An impregnated cathode is used which is arc resistant and has excellent life properties. Mechanical gearing is provided to "gang" the tuners and permit tuning from a single shaft. The 7541 has a waveguide type output which is designed to couple to a modified UG-52A/U choke flange. The output may be pressurized, although no breakdown will occur if pressure is maintained at 1 atmosphere.

The 7541 tuner is designed for hand tuning. A lock nut is provided which may be tightened after the desired frequency is reached. A calibrated dial provides an indication of tube frequency.

The 7541 is designed for transmitter service in airborne fire control systems and in missile seeker systems. The tube is useful in ground as well as airborne installations where a high performance X-band power source is required. While the tube is designed for a 0.001 duty cycle, higher duties may be used with reduced peak power output. The 7541 is designed to replace the fixed-tuned 4J50 series magnetrons.

MECHANICAL:

Mounting Position	Any
Dimensions	See Outline Drawing
Air Flow:	
To Fins	An air stream should be directed along the cooling fins toward the body of the tube. Adequate flow should be provided so that the temperature of the anode block does not exceed 150°C.
Cathode Bushing	Oil Immersed or Pressurized ⊕
Waveguide Output Flange	Mates with modified JAN UG-52/U
Cathode Connector	The cathode connector should contain a built-in capacitor such as the Jettron No. 9000-C manufactured by Jettron Products, Hanover, New Jersey.
Tuner	Calibrated with Lock Nut
Tuning Torque:	
Tube:	
Room Temperature	150 in. oz. Max.
Extreme Temperature (125°C to −55°C)	200 in. oz. Max.
Equipment (applied to stops)	200 in. oz. Max.
Tuner Backlash ■	20 Megacycles Max.
Lubrication †	
Pressurization of Output	15 psia (Min.) 45 psia (Max.)
Vibration §	
Shock	30 g's, 11 Milliseconds
Net Weight (Approx.)	12 Pounds
Shipping Weight	25 Pounds

ELECTRICAL:

Heater, for Unipotential Cathode:		
Voltage (ac)	13.75	Volts
Current at 13.75 Volts	Min.: 2.8 Max.: 3.5	Amperes
Starting Current	Maximum instantaneous starting current must never exceed 12 amperes.	
Minimum Cathode Heating Time	150	Seconds
Frequency	8500-9600	Megacycles
Maximum Frequency Pulling at VSWR of 1.5	15	Megacycles

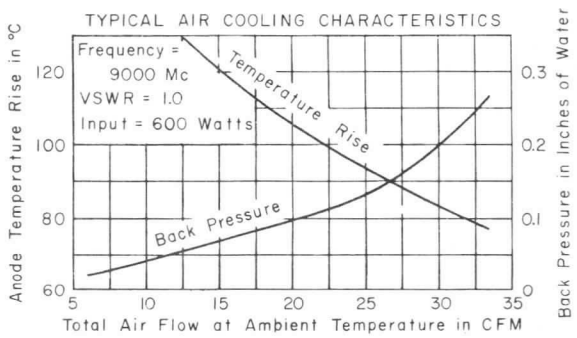

PULSED OSCILLATOR SERVICE

MAXIMUM AND MINIMUM RATINGS:	Min.	Max.	
Peak Anode Voltage	--	23	Kilovolts
Peak Anode Current	--	27.5	Amperes
Peak Power Input	--	630	Kilowatts
Duty	--	0.0011	--
Pulse Duration	--	1.1	Microseconds
Rate of Rise of Voltage Pulse	70	140	kv/μsecond
Anode Block Temperature	--	150	°C
Cathode Bushing Temperature	--	165	°C
Load Voltage Standing Wave Ratio	--	1.2	

TYPICAL OPERATION WITH LOAD
VOLTAGE STANDING WAVE RATIO
EQUAL TO OR LESS THAN 1.05 EXCEPT AS NOTED

OSCILLATION WITH DUTY CYCLE OF 0.001:		
Heater Voltage ●	0	Volts
Peak Anode Voltage	22	Kilovolts
Peak Anode Current	27.5	Amperes
Pulse Repetition Rate	1000	cps
Pulse Duration	1.0	μseconds
RF Bandwidth with worst phasing of 1.2 VSWR	1	Megacycle
Side Lobes	10	dB
Pulling Figure at VSWR of 1.5	12	Megacycles
Pushing Figure	0.2	Mc/amp
Peak Power Output	250	Kilowatts

NOTES

⊕ No breakdown will occur if pressure is maintained above 600 mm of Hg. Air flow must be sufficient to keep bushing below 165°C.

■ Backlash is defined as the difference in frequency when a given dial setting is approached in either direction of rotation.

† The 7541 is factory lubricated and should not require further lubrication. Care should be exercised to keep foreign particles out of the exposed portions of the turner mechanism. Should Further lubrication be desired, Dow Corning Silicone No. 33 Grease should be used on the gears.

● Heater voltage should be 0 volts for maximum life at 27.5 ma. and 0.001 duty. Higher voltages are permissible but may result in short life. Heater voltage for power input less than 450 watts = $13.75\left(1-\frac{\text{Power Input}}{450}\right)$.

§ Special vibration problems encountered with the 7541 should be referred to the Microwave Engineering Dept. Westinghouse Electric Corporation, Elmira, New York.

NOTES FOR OUTLINE DRAWING

1: Reference plane A is defined as the plane through that portion of the mounting flange designated as annular surface D. Reference plane B is defined as the plane which is perpendicular to plane A and passes thru the exact centers of mounting flange holes number 2 and number 3. Reference plane C is defined as the plane which is perpendicular to plane A and plane B and passes thru the exact center of mounting flange holes number 3 and number 4.

2: Surfaces D and E of the waveguide output flange and the mounting flange are made so that they may be used to provide a hermetic seal. This surface shall be flat within 0.015 TIR with a surface roughness of 32 per MIL-STD-10.

3: The axis of the heater-cathode terminal will be within the confines of a cylinder whose radius is 3/64 inch and whose axis is perpendicular to reference plane A at the specified location.

4: Allpoints on mounting flange other than specified in Note 1 must lie within 0.015 inch above or below reference plane A.

5: The limits include angular as well as lateral deviations.

6: These dimensions define extremities of the 0.169 inch internal diameter of the cylindrical heater-terminal.

7: These dimensions define extremities of the 0.540 inch internal diameter of the cylindrical heater-cathode terminal.

8: No part of the connector device for the heater and heater-cathode terminals should bear against the underside of this lip.

9: The heater terminal and the heater-cathode terminal are concentric within 0.010 inch.

10: Anode temperature shall be measured at junction of waveguide and anode back.

11: A 1-3/32" minimum long stud thru the mounting holes shall not interfere with any part of the tube.

The information contained herein is supplied without assuming responsibility for infringement of patents or other rights of third parties which may result from its use. No license is granted by implication or otherwise under any patent or patent rights of Westinghouse Electric Corporation.

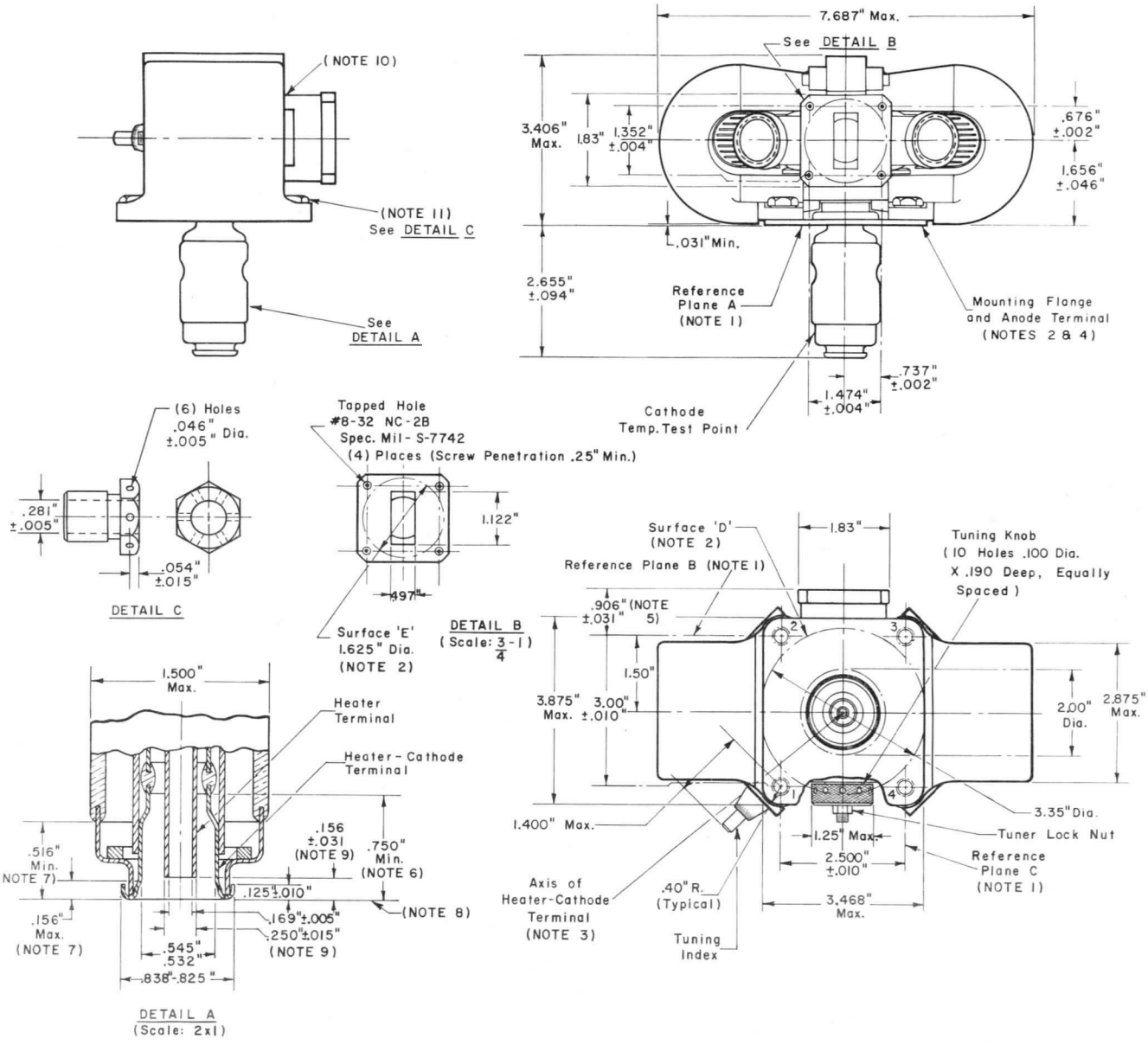
(NOTE 10)
(NOTE 11)
See DETAIL C
See DETAIL A
7.687" Max.
See DETAIL B
3.406" Max.
1.83"
1.352" ±.004"
.676" ±.002"
1.656" ±.046"
.031" Min.
2.655" ±.094"
Reference Plane A (NOTE 1)
Mounting Flange and Anode Terminal (NOTES 2 & 4)
.737" ±.002"
1.474" ±.004"
Cathode Temp. Test Point
(6) Holes .046" ±.005" Dia.
.281" ±.005"
.054" ±.015"
DETAIL C
Tapped Hole #8-32 NC-2B Spec. Mil-S-7742 (4) Places (Screw Penetration .25" Min.)
1.122"
.497"
Surface 'E' 1.625" Dia. (NOTE 2)
DETAIL B (Scale: 3-1/4)
Surface 'D' (NOTE 2)
Reference Plane B (NOTE 1)
1.83"
Tuning Knob (10 Holes .100 Dia. X .190 Deep, Equally Spaced)
.906" ±.031" (NOTE 5)
1.50"
3.875" Max.
3.00" ±.010"
2.00" Dia.
2.875" Max.
1.400" Max.
3.35" Dia.
1.25" Max.
Tuner Lock Nut
2.500" ±.010"
Reference Plane C (NOTE 1)
Axis of Heater-Cathode Terminal (NOTE 3)
.40" R. (Typical)
3.468" Max.
Tuning Index
1.500" Max.
Heater Terminal
Heater-Cathode Terminal
.516" Min. (NOTE 7)
.156 ±.031 (NOTE 9)
.750" Min. (NOTE 6)
.125±.010"
(NOTE 8)
.156" Max. (NOTE 7)
.169"±.005"
.250"±.015" (NOTE 9)
.545"
.532"
.838"-.825"
DETAIL A (Scale: 2x1)

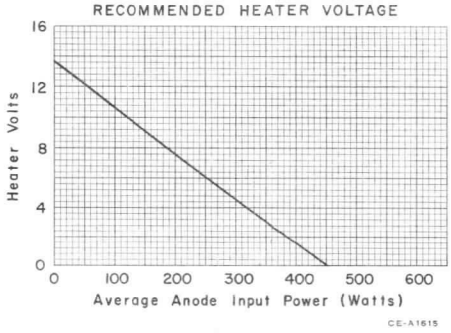
RECOMMENDED HEATER VOLTAGE
Heater Volts
16
12
8
4
0
0
100
200
300
400
500
600
Average Anode Input Power (Watts)
CE-A1615

RECOMMENDED OPERATING REGION
IN
RG-51/U WAVEGUIDE

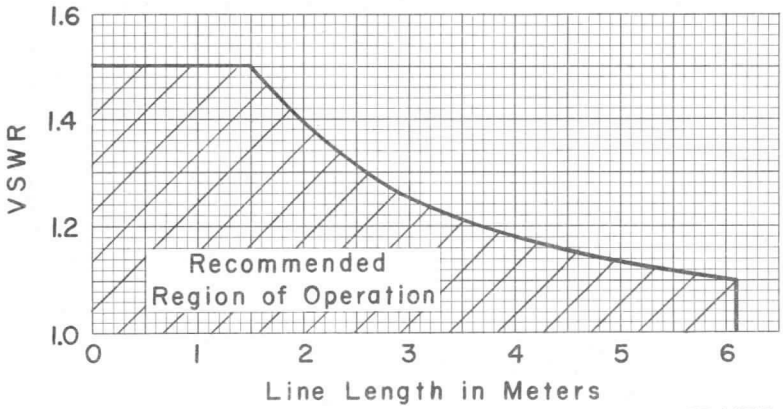

CE-A1610

TYPICAL FREQUENCY DRIFT CHARACTERISTICS

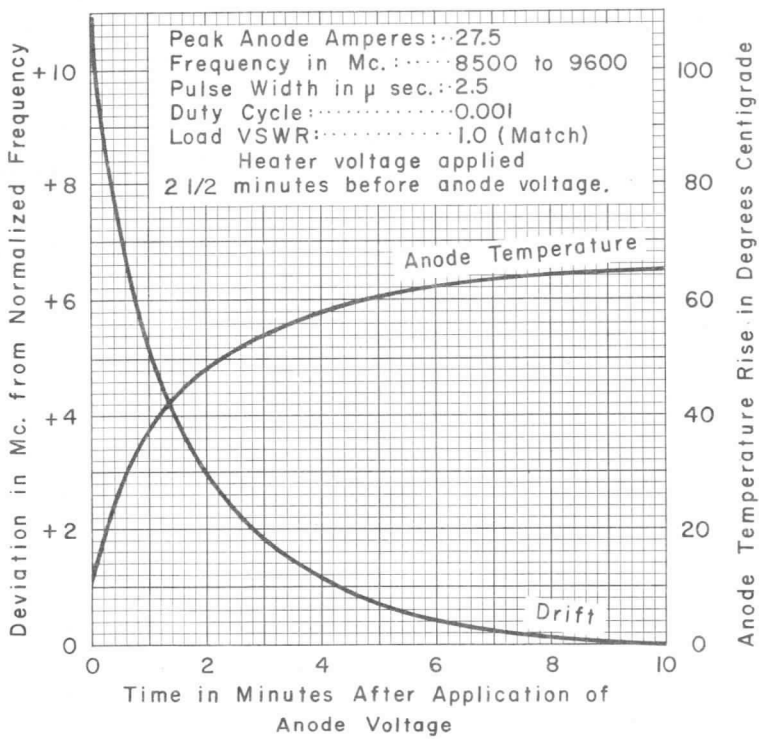

CE-A1607

The information contained herein is supplied without assuming responsibility for infringement of patents or other rights of third parties which may result from its use. No license is granted by implication or otherwise under any patent or patent rights of Westinghouse Electric Corporation.

Westinghouse

WL-7794

May 15, 1962

TUNABLE MAGNETRON TYPE WL-7794

The WL-7794 is a C band 5 watt CW magnetron. It is designed for AM modulated communications, telemetering and relay systems requiring high average power with good bandwidth. In pulse code modulation systems peak powers up to 100 watts are available. In amplitude modulated systems one hundred percent modulation of a five watt carrier is permitted. With 100% modulation incidental FM is less than 10 megacycles. The rugged light weight design permits use on airborne systems where shock and vibration are severe.

The WL-7794 uses a multivaned anode structure and an oxide coated unipotential cathode. It contains a capacitive tuning element which can be adjusted by means of a differential screw to a desired frequency in the range 4200-4400 Mc. The integral magnets are enclosed in steel shells which serve to shield the magnetron from stray magnetic field effects.

The WL-7794 is also most satisfactory for laboratory use as its tuning system permits precise and repeatable frequencies settings any where in the range. Its signal is readily sensed when tube is amplitude modulated. The power output is high enough for standing wave measurements or research into off-resonance spurious behavior.

ELECTRICAL:

Cathode	Coated Unipotential	
Heater:		
Voltage (Note 1)	6.3	Volts
Current	0.6 ± 10%	Ampere
Warm-Up Time (Note 2)	40	Seconds

MECHANICAL:

Max. Overall Length	3.750	Inches
Max. Diameter (Excluding Turminals)	1.656	Inches
Connectors:		
Output	BNC Connector Jack JAN UG-89/U	
Operating Voltages	Special 8-Pin In-Line Plug	
Cooling	Unrestricted Air Convection	
Ambient Temperature	−55°C to +70°C	
Shell Temperature	35°C max. above ambient	
Vibration and Shock (Note 3)	Ruggedized	
Operating Position (Note 4)	Any	
Net Weight	0.9 Pounds	

Life: 500 hours of C.W. operation at maximum power with correspondingly longer usefulness at lower duty cycle or power.



TYPICAL OPERATION: Continuous Wave Oscillator

(Load VSWR 2.0 Max.)	Min.	Typical	Max.	
Heater Voltage (Note 1)	5.7	6.3	7.0	Volts
Heater Current	0.54	0.60	0.66	Amperes
Cathode Voltage	–250	–425	–450	Volts
Cathode Current	10	30	60	Ma.
Power Output	0.5	4.5	5	Watts
Frequency	4200	--	4400	Megacycles
Pulling Figure for VSWR of 1.5	--	--	4.0	Megacycles

TYPICAL OPERATION: Pulsed Applications

(Load VSWR 2.0 Max.)				
Heater Voltage (Note 1)	5.7	6.3	7.0	Volts
Heater Current	0.54	0.60	0.66	Amperes
Peak Cathode Voltage	–250	–875	–900	Volts
Peak Current	10	500	700	Ma.
Peak Power	0.5	100	--	Watts
Average Power	0.5	5	--	Watts
Duty Cycle (Note 5)	0.001	0.05	1.0	--

TYPICAL OPERATION: Amplitude Modulation

(Load VSWR 2.0 Max.)				
Heater Voltage (Note 1)	5.7	6.3	7.0	Volts
Heater Current	0.54	0.60	0.66	Amperes
Cathode Center Voltage	–300	–350	–400	Volts
Cathode Current (average)	15	30	60	Ma.
Modulation Frequency	--	10^3	10^6	Cycles/Sec.
Modulation Amplitude (Note 6)	--	--	100%	

1: Operation of heater with direct current will be necessary in most cases to minimize frequency modulation at alternating current supply frequencies. A.C. operation is permissible in some applications. The heater should be connected to the cathode through 1 megohm of resistance.

2: Cathode voltage and heater voltage can be applied simultaneously, but power will not be available at full rating in less than 40 seconds.

3: The tube has been tested to the limit of hammer tests. Special vibration problems encountered should be referred to the nearest Westinghouse Electronic Tube salesman or Westinghouse Electronic Tube Division, Elmira, N.Y.

4: The tube connectors do not provide mechanical support. Non-magnetic clamps should be used to support the shell. Typical application supports the tube with its principle axis horizontal.

5: Typical application may vary over limits given. A maximum input of 50 watts must not be exceeded.

6: The amplitude of modulation voltage is related to cathode center voltage. In general, the difference between 230 volts and the operating center voltage is the amplitude needed for 100% sine wave modulation.

Operating Recommendations

Maximum Ratings:

The maximum ratings must not be exceeded if performance characteristics are to be maintained. It does not necessarily follow that all maximum ratings can be applied simultaneously.

Magnetic Field Precautions:

While the steel shell enclosing the integral permanent magnets serves as an effective magnetic shield, it still is possible to affect the operating point of the tube if brought within strong A.C. field regions. Ferromagnetic materials should not be used for mounting brackets. Magnets should be kept at least one inch from the tube. Turning the screws in either end cover can affect the magnetic field and make the tube inoperative.

Handling Precautions:

This tube is exceptionally rugged and can take extreme shock conditions and any normal handling without special precaution except that the output section can be bent by strong pressure. It is advised that the tube be cradled in the inner part of its shipping container when on the bench, because this is designed to keep the tube away from ferromagnetic surfaces or contact with other tubes.

Tuning:

The tube is delivered with frequency set and locked at the center of its tuning range. Loosening the locking nut permits rotation of the tuning screw in either direction. An approximate tuning curve is shown in Figure 1. Tuning is achieved by motion of

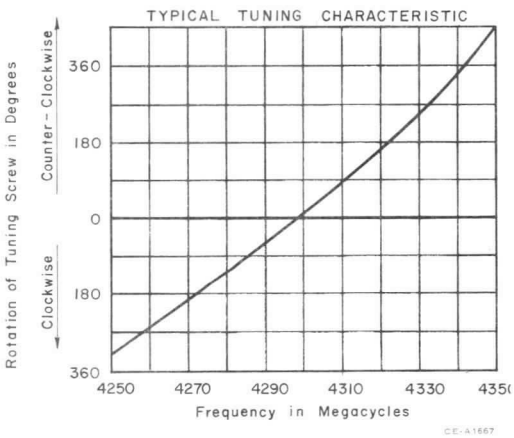

FIGURE 1

a capacitive element inside the vacuum enclosure. The differential screw system permits precise and repeatable settings. The locking nut permits close settings to be maintained in systems where vibration is extreme. The thermal stability variation of frequency with change in ambient temperature is shown in Figure 2. The reference value is the frequency

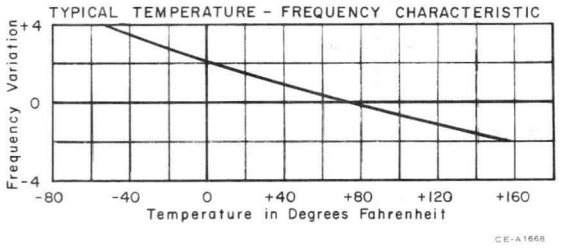

FIGURE 2

after 20 minutes stabilization at room temperature. During this interval, frequency may show a drift of about –5 Mc.

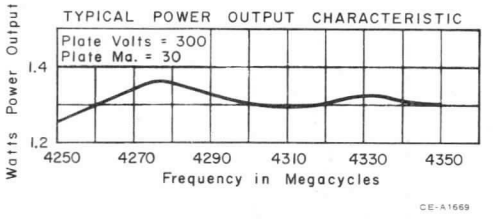

FIGURE 3

Power Uniformity:

When operated as a C.W. oscillator at a current of 30 ma., the power output remains constant within ± 0.1 watt, as shown in Figure 3.

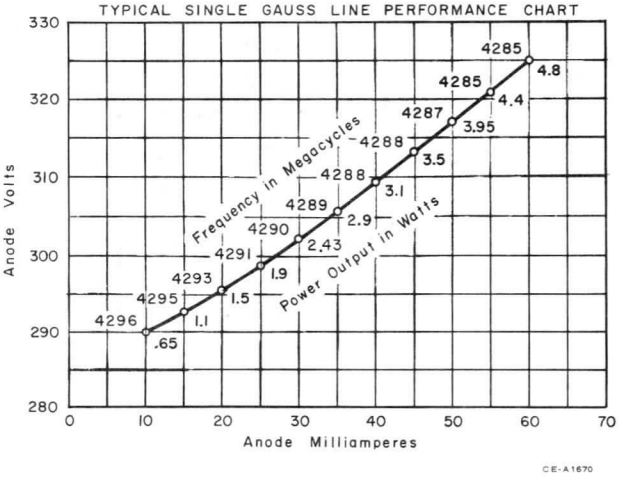

FIGURE 4

Performance:

A single gauss-line performance chart for a typical tube is shown in Figure 4 for a locked frequency setting of the tube. This shows the FM tuning probable with amplitude modulation. Higher or lower magnetic field settings are possible to meet specific requirements. Application problems should be referred to the nearest Westinghouse Electronic Tube salesman or Westinghouse Electronic Tube Division, Elmira, N.Y.

PIN#	CONNECTION
1	NO CONNECTION
2	NO CONNECTION
3	NO CONNECTION
4	NO CONNECTION
5	ANODE (GROUND)
6	HEATER
7	CATHODE
8	HEATER

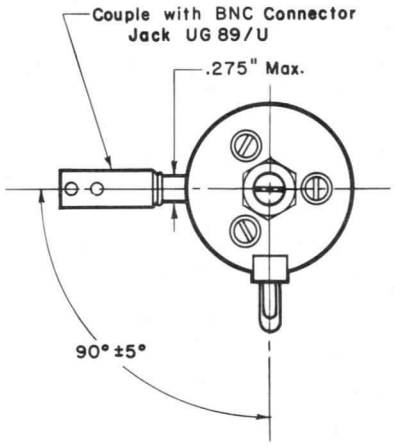

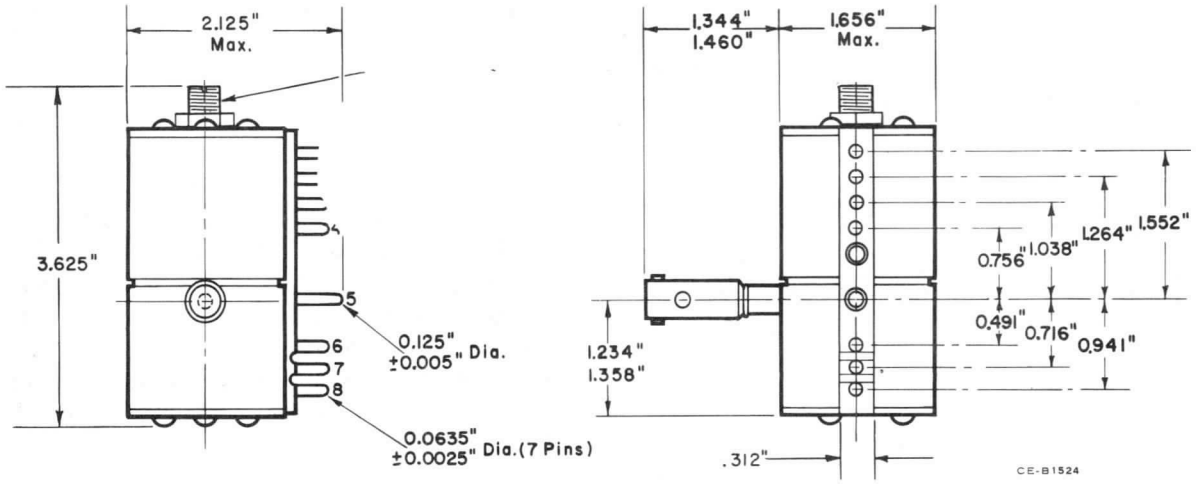

MAGNETRON TYPE WL-7795

Fixed Frequency	5 Watt Output	Integral Magnets
4300 ± 10 Megacycles	100% Amplitude Modulated	100 Watts with Duty Cycles

The WL-7795 is a C band 5 watt CW magnetron. It is designed for amplitude modulated communications, telemetering and relay systems requiring high average power with good bandwidth. In pulse code modulation systems peak powers up to 100 watts are available with duty cycles ranging to five watts average power. In amplitude modulated systems one hundred percent modulation of a five watt carrier is permitted. With 100% modulation incidental FM is less than 8 megacycles. The rugged, light weight design of the WL-7795 permits use on airborne systems where shock and vibration are severe.

The WL-7795 uses a multivaned anode structure and an oxide coated unipotential cathode. It contains a capacitive tuning element preset in the factory to 4300 ± 10 megacycles. The integral magnets are enclosed in steel shells to shield the magnetron from stray magnetic field effects.

ELECTRICAL:

Cathode	Coated Unipotential	
Heater:		
Voltage (Note 1)	6.3	Volts
Current	0.6 ± 10%	Amperes
Heating Time (minimum)	40	Seconds

MECHANICAL:

Operating Position (Note 4)	Any
Connectors:	
Output	Couples with BNC Jack (JAN UG-89/U)
Operating Voltages	Special 8-Pin In-Line Socket
Cooling	Unrestricted Air Convection
Ambient Temperature	–55 to +70 °C
Shell Temperature (maximum)	40 °C Above Ambient
Vibration: (Note 2)	
Frequency	25 CPS
Amplitude	0.080 Inches
Net Weight	1 Pound
Shipping Weight	2 Pounds

MAXIMUM RATINGS:

Absolute Maximum Values

Heater Voltage	7.0 max.	Volts
Anode Voltage	900 max.	Volts
Modulation Frequency	1 max.	Mc.
Average Power Input	30 max.	Watts
Heater-Cathode Voltage	± 45 max.	Volts

TYPICAL OPERATION: (CW or AM)

Voltages are with respect to Ground

Anode	Grounded	
Cathode Voltage	–425	Volts
Anode Current	30	Ma.
Power Output (Note 3)	5	Watts
Frequency (Note 5)	4300	Mc.
Frequency Tolerance	± 10	Mc.

TYPICAL OPERATION: (Pulsed Applications)

	Min.	Typical	Max.	
Heater Voltage	5.7	6.3	7.0	Volts
Heater Current	0.54	0.60	0.66	Ampere
Peak Cathode Voltage	–250	–875	–900	Volts
Peak Current	10	500	700	Ma.
Peak Power	0.5	100	- -	Watts
Average Power	0.5	5	- -	Watts
Duty Cycle (Note 6)	0.001	0.05	1.0	- -

NOTES

1. Heater should be connected to cathode through 100 K resistor.
2. Special vibration problems should be referred to Westinghouse Electronic Tube Division, Elmira, N.Y.
3. 100% amplitude modulation with 5 watts carrier is permitted.
4. The connectors do not provide mechanical support. Non-magnetic clamps should be used to support the shell.
5. Other versions of this tube are available to operate on different frequencies. The tube may be set, at the factory, to any frequency between 4200 and 4400 megacycles with a tolerance of ± 10 megacycles.
6. Typical operation may vary over limits given. A maximum input of 50 watts must not be exceeded.

PIN#	CONNECTION
1	NO CONNECTION
2	NO CONNECTION
3	NO CONNECTION
4	NO CONNECTION
5	ANODE (GROUND)
6	HEATER
7	CATHODE
8	HEATER

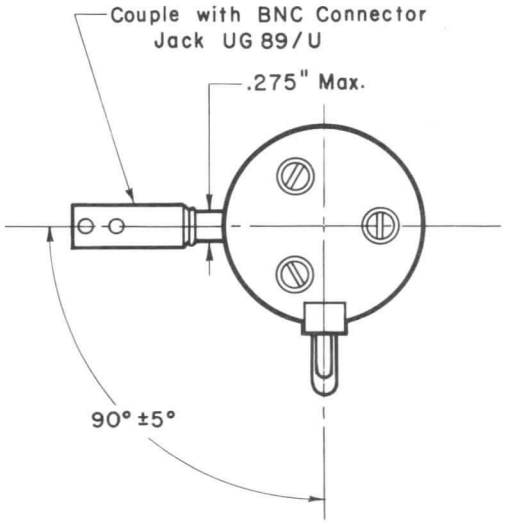

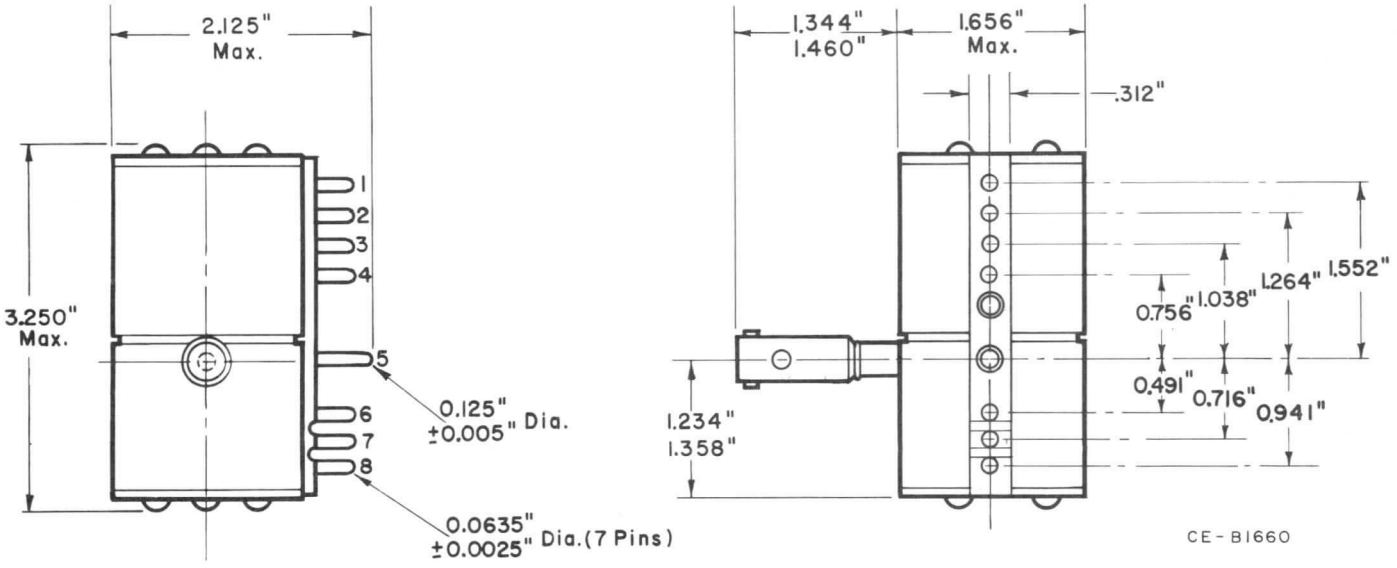

MAGNETRON TYPE 7796

Band Sweep Operation
Amplitude Modulation

1-1/2 Watts
Power Output

Electro-Mechanical
Frequency Sweep

The 7796 is a C band CW magnetron intended for use in applications requiring swept frequency operation over the band from 4200 to 4400 megacycles. Over this band, the power output is 1.5 watts minimum. Frequency is changed by varying the strap-to-strap capacity of the doubly-strapped vane resonator. This is accomplished by an electrically-driven reed inside the vacuum envelope. This member can be driven at any frequency from 0 to 300 cycles per second. Reed resonance occurs at approximately 300 cycles per second.

The 7796 can be frequency modulated at frequencies up to 300 cycles per second at a deviation from 0 to 100 megacycles. The AM modulation resulting from this deviation is very small. The center frequency can be varied from 4200 to 4400 by passing dc current through the drive coils.

The 7796 has a very low pushing figure, permitting it to be amplitude modulated with small amounts of incidental FM. Amplitude modulation is accomplished by varying the anode voltage. Modulation at frequencies up to 1 megacycle is possible.

The 7796 is small, light weight and resistant to shock and vibration. Integral magnets are contained within an external steel shell. Output is from a BNC connector.

ELECTRICAL:

Cathode	Coated Unipotential	
Heater:		
Voltage	6.3	Volts
Current	0.6 ± 10%	Ampere
Heating Time	40	Seconds
Reed Drive Coil Resistance at 25°C	0.3 to 0.4	Ohms

MECHANICAL:

Operating Position (Note 1)	Any	
Connectors:		
Output	Couples with BNC Jack (JAN UG-89/U)	
Operating Voltages	Special 8-Pin In-Line Socket	
Cooling	Unrestricted Air Convection	
Ambient Temperature	−55 to +70 °C	
Shell Temperature (Max.)	40 °C Above Ambient	
Magnet Isolation	Shell must be at least 1" from Magnets	
Vibration: (Note 2)		
Frequency	25	CPS
Amplitude	0.080	Inches
Net Weight	1	Pound
Shipping Weight	2	Pounds

MAXIMUM RATINGS:

Absolute Maximum Values:

Heater Voltage	7.0	max.	Volts
Anode Voltage	350	max.	Volts
Anode Modulating Voltage for Pulse or Amplitude Modulation for 100% Modulation	100	max.	Volts
Heater-Cathode Voltage	± 45	max.	Volts

TYPICAL OPERATING CHARACTERISTICS:

Anode Voltage	350	Volts
Anode Current	30	Ma.
Reed Resonant Frequency	300 ± 30	CPS
Reed Drive Peak-to-Peak Voltage at Resonance for ± 100 Mc. Shift	0.1	Volts
Reed Drive Direct Current for ± 100 Mc Shift	± 0.5	Ampere
Audio Power for 100% Amplitude Modulation	2.5	Watts
Average RF Power Output over Band	1.5	Watts

1. The connectors do not provide mechanical support. Non-magnetic clamps should be used to support the shell.

2. Special vibration problems should be referred to Westinghouse Electronic Tube Division, Elmira, New York.

PIN#	CONNECTION
1	DRIVE (+)
2	NO CONNECTION
3	NO CONNECTION
4	DRIVE (GROUND)
5	ANODE (GROUND)
6	HEATER
7	CATHODE
8	HEATER

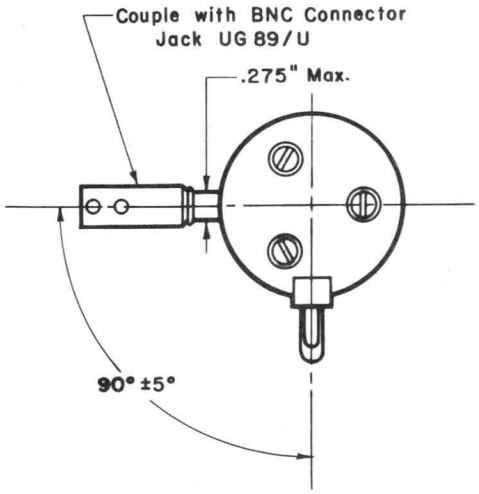

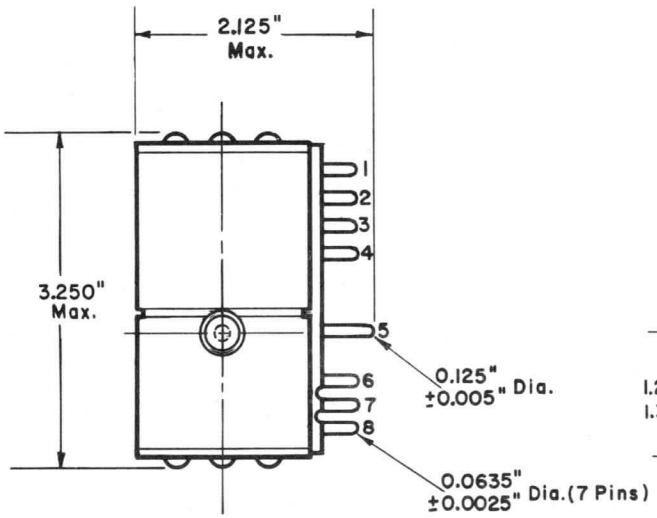

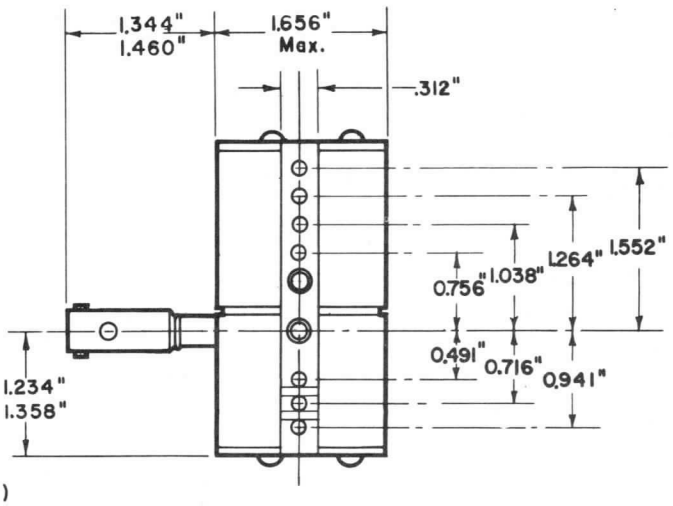

CE-B1647

August 15, 1966

Servo Tunable
8.5 – 9.6 GHz

COAXIAL MAGNETRON TYPE WL-8635

70 KW Peak
Power Output

The WL-8635 is a tunable X-Band coaxial magnetron. It is designed to serve as a pulsed oscillator at frequencies between 8500 and 9600 megahertz.

The WL-8635 has a typical power output of approximately 70 kilowatts over its entire frequency range. Pulse widths up to 5.0 microseconds may be used. The WL-8635 provides excellent spectrum shape and excellent stability of operation. The pulling figure, or variation in frequency with mismatch, of coaxial magnetrons is lower, by a factor of 3 or 4 times, than that of conventional magnetrons. The pushing figure is also very low in coaxial magnetrons which is largely due to the excellent stability.

Structurally, the WL-8635 employs a slotted vane type anode. Tuning is accomplished by means of a plunger which is coupled to the main resonator. Tuning is therefore accomplished remote from the interaction space greatly improving the electrical and thermal stability.

An impregnated cathode is used which is arc resistant and has excellent life properties. The WL-8635 has a wave guide type output which is designed to couple to a modified UG-52A/U choke flange. The output may be pressurized, although no breakdown will occur if pressure is maintained at 1 atmosphere.

The WL-8635 is designed for transmitter service in radar systems. The tube is useful in ground as well as airborne installations where a high performance X-band power source is required.

ELECTRICAL

Heater, for Unipotential Cathode:	
Voltage (ac)	12.6 Volts
Current at 12.6 Volts	Min. 2.0, Max. 2.4 Amperes
Starting Current	Maximum instantaneous starting current must never exceed 8 amperes.
Minimum Cathode Heating Time	150 Seconds
Frequency	8.5 to 9.6 Gigahertz
Maximum Frequency Pulling at VSWR of 1.5	4 Megahertz

MECHANICAL

Mounting Position	Any
Air Flow	An air stream should be directed along the cooling fins toward the body of the tube. Adequate flow should be provided so that the temperature of the anode block does not exceed 175°C.
Cathode Bushing (Note 1)	Oil Immersed or Pressurized
Waveguide Output Flange	Mates with modified JAN UG-52/U
Cathode Connector	The cathode connector should contain a built-in capacitor such as the Jettron No. 9000-C manufactured by Jettron Products, Hanover, New Jersey.
Tuner	Calibrated, with shaft for Motor Drive
Net Weight (Approx.)	6.9 Pounds

PULSED OSCILLATOR SERVICE

RATINGS	Min.	Max.	
Peak Anode Voltage	–	17	Kilovolts
Peak Anode Current	5	22	Amperes
Peak Power Input	–	300	Kilowatts
Average Power Input	–	450	Watts
Duty	–	0.002	–
Pulse Duration	0.1	5.0	Microseconds
Rate of Rise of Voltage Pulse (Note 3)	50	200	kv/μsecond
Anode Block Temperature	–	175	°C
Cathode Bushing Temperature	–	165	°C
Load Voltage Standing Wave Ratio	–	1.5	–

TYPICAL OPERATION WITH LOAD VOLTAGE STANDING WAVE RATIO EQUAL TO OR LESS THAN 1.05 EXCEPT AS NOTED

WITH DUTY CYCLE OF 0.001			
Heater Voltage (Note 2)	10.4	7.8	Volts
Peak Anode Voltage	15	15	Kilovolts
Peak Anode Current	15	15	Amperes
Pulse Duration	0.1	5.0	μseconds
RF Bandwidth with worst Phasing of 1.5 VSWR	10.0	0.4	Megahertz
Side Lobes	10	10	dB
Pulling Figure at VSWR of 1.5	3	3	Megahertz
Pushing Factor (10 to 15A)	20	20	KHz/A
Thermal Factor for any 30° range between −55°C and 150°C	0.1	0.1	MHz/°C
Peak Power Output (Min.)	65	70	Kilowatts
Duty	0.0003	0.001	–
Frequency Jitter (rms)	3	3	KHz
Stability (Max.)	0.2	0.2	Per Cent

LIFE TEST

Duration . . . . . 2000 Anode Hours

Conditions:	Pulse Length	Peak Current	Filament Voltage	Duration	Duty
Stand by	–	0	12.6	2.5 Min.	–
Osc.	0.4μSec	15A	10.4	9 Min.	0.00033
Osc.	3.1μSec	15A	7.8	45 Min.	0.001
Off	–	0	0	10 Min.	–

NOTES

1. No breakdown will occur if pressure is maintained above 600 mm Hg. Air flow must be sufficient to keep bushing below 165°C.
2. Heater voltage should be 7.8 volts for maximum life at 15 ma. and 0.001 duty. Higher voltages are permissable but may result in short life.
3. Tube will perform over this range. If operated below 160 KV/μsec. the WL-8635 will exhibit less than 20 nanoseconds of leading edge jitter for 99.5% of all pulses.

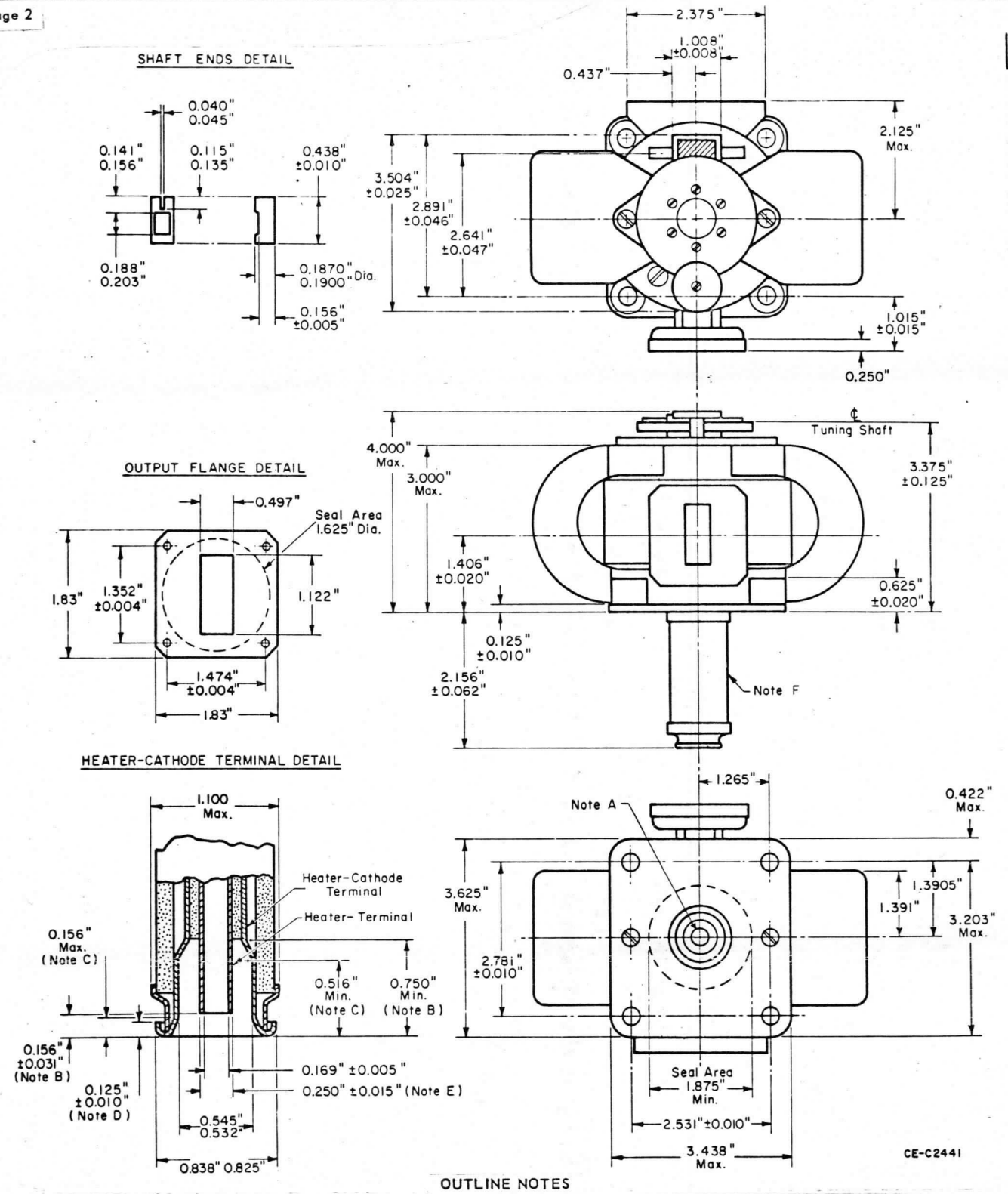

OUTLINE NOTES

A. Axis of cathode terminal shall occupy specified location within 3/65" R. including angular and lateral deviations.
B. Defines extremity of cylindrical section designated by 0.169 diameter.
C. Defines extremity of cylindrical section designated by 0.540 diameter.
D. Clamping shall be confined to this area.
E. Heater terminal and cathode terminal shall be concentric within 0.010.
F. Reference point for cathode bushing temperature measurements. Locate on 1.000 diameter cathode terminal.

The information contained herein is supplied without assuming responsibility for infringement of patents or other rights of third parties which may result from its use. No license is granted by implication or otherwise under any patent or patent rights of Westinghouse Electric Corporation.

MAGNETRON TYPE WX-22762

Servo Tunable
8500 - 9600 Mc.

Coaxial
Design

70 KW Peak
Power Output

The WX-22762 is a tunable X-Band coaxial magnetron. It is designed to serve as a pulsed oscillator at frequencies between 8500 and 9600 megacycles per second.

The WX-22762 has a typical power output of approximately 70 kilowatts over its entire frequency range. Pulse widths up to 5.0 microseconds may be used. The WX-22762 provides excellent spectrum shape and excellent stability of operation. The pulling figure, or variation in frequency with mismatch, of coaxial magnetrons is lower, by a factor of 3 or 4 times, than that of conventional magnetrons. The pushing figure is also very low in coaxial magnetrons which is largely due to the excellent stability.

Structurally, the WX-22762 employs a slotted vane type anode. Tuning is accomplished by means of a plunger which is coupled to the main resonator. Tuning is therefore accomplished remote from the interaction space greatly improving the electrical and thermal stability.

An impregnated cathode is used which is arc resistant and has excellent life properties. The WX-22762 has a wave guide type output which is designed to couple to a modified UG-52A/U choke flange. The output may be pressurized, although no breakdown will occur if pressure is maintained at 1 atmosphere.

The WX-22762 is designed for transmitter service in radar systems. The tube is useful in ground as well as airborne installations where a high performance X-band power source is required.

ELECTRICAL

Heater, for Unipotential Cathode:

Voltage (ac)	12.6 Volts
Current at 12.6 Volts	Min. 2.0, Max. 2.4 Amperes
Starting Current	Maximum instantaneous starting current must never exceed 8 amperes
Minimum Cathode Heating Time	150 Seconds
Frequency	8500-9600 Megacycles
Maximum Frequency Pulling at VSWR of 1.5	5 Megacycles

Δ The WX- number identifies a specific laboratory design; the design and, consequently, the data and type number are subject to change. No obligations are assumed to manufacture this particular device in the future unless otherwise arranged. These drawings and specifications are the property of Westinghouse Electric Corporation, Electronic Tube Division, and shall not be reproduced or copied or used as the basis for the manufacture or sale of apparatus and/or devices without permission.

Westinghouse

DEVELOPMENTAL DEVICE
Tentative Data

MECHANICAL

Mounting Position. . . . . Any
Dimensions. . . . . See Outline Drawing
Air Flow An air stream should be directed along the cooling fins toward the body of the tube. Adequate flow should be provided so that the temperature of the anode block does not exceed 150°C.
Cathode Bushing (Note 1). . . . Oil Immersed or Pressurized
Waveguide Output Flange . . Mates with modified JAN UG-52/U
Cathode Connector. . . The cathode connector should contain a built-in capacitor such as the Jettron No. 9000-C manufactured by Jettron Products, Hanover, New Jersey
Tuner. . . . . Calibrated, with shaft for Motor Drive
Net Weight (Approx.) . . . . . 8 Pounds
Shipping Weight. . . . . 14 Pounds

PULSED OSCILLATOR SERVICE

RATINGS:

Peak Anode Voltage. . . . . 16 Kilovolts
Peak Anode Current. . . . . 16 Amperes
Peak Power Input. . . . . 250 Kilowatts
Duty. 0.001
Pulse Duration. . . . . 5.0 Microseconds
Rate of Rise of Voltage Pulse . . . . . 200 kv/μsecond
Anode Block Temperature. . . . . 200°C
Cathode Bushing Temperature . . . . . 165°C
Load Voltage Standing Wave Ratio 1.5

TYPICAL OPERATION WITH LOAD
VOLTAGE STANDING WAVE RATIO
EQUAL TO OR LESS THAN 1.05 EXCEPT AS NOTED

WITH DUTY CYCLE OF 0.001

Heater Voltage (Note 2).	10.4	7.8	Volts
Peak Anode Voltage.	15	15	Kilovolts
Peak Anode Current.	15	15	Amperes
Pulse Repetition Rate	3000	200	cps
Pulse Duration.	.1	5.0	μseconds
RF Bandwidth with worst phasing of 1.5 VSWR	10.0	0.4	Megacycles
Side Lobes.	10	8	dB
Pulling Figure at VSWR of 1.5	3	3	Megacycles
Pushing Factor (10 to 15 A)	20	20	KC/A
Thermal Factor for any 30° range between -55°C and 150°C. . . .	0.2	0.2	Mc/°C
Peak Power Output.	70	70	Kilowatts
Duty.	0.0003	0.001	

NOTES

1. No breakdown will occur if pressure is maintained above 600 mm Hg. Air flow must be sufficient to keep bushing below 165°C.
2. Heater voltage should be 7.8 volts for maximum life at 15 ma. and 0.001 duty. Higher voltages are permissable but may result in short life.

TYPICAL PERFORMANCE CHARACTERISTICS

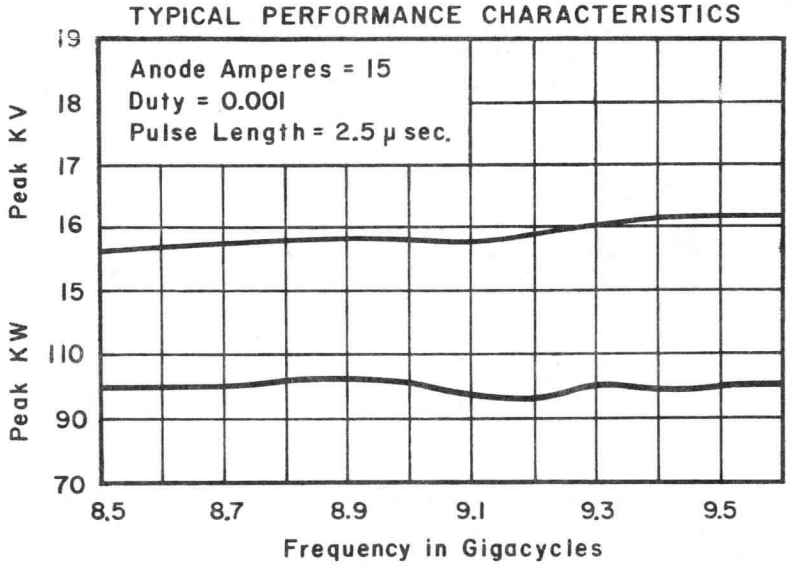

FREQUENCY PUSHING IN MEGACYCLES

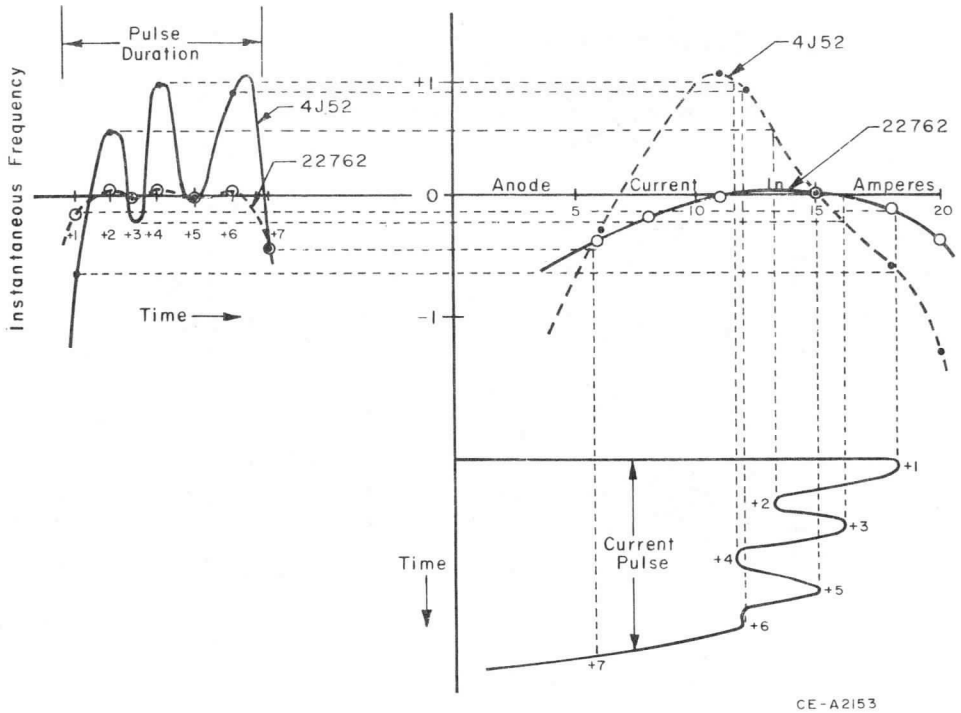

CE-A2153

Westinghouse

DEVELOPMENTAL DEVICE
Tentative Data

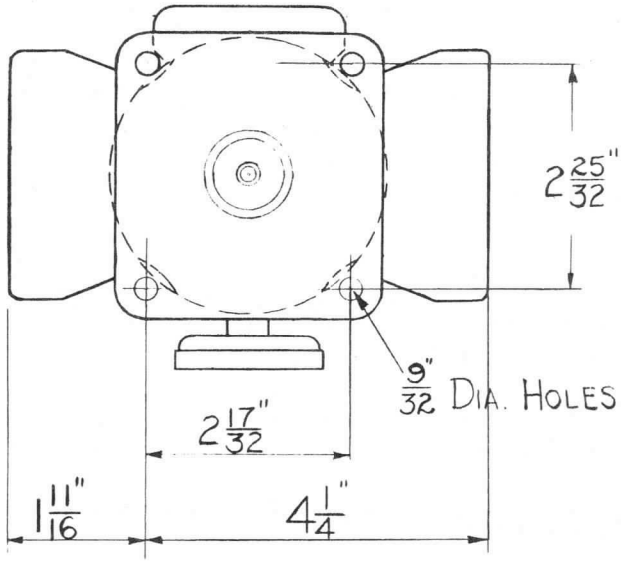

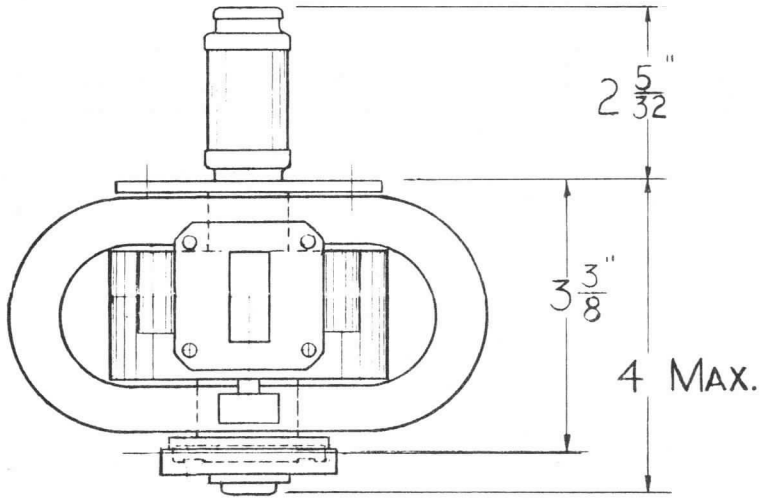

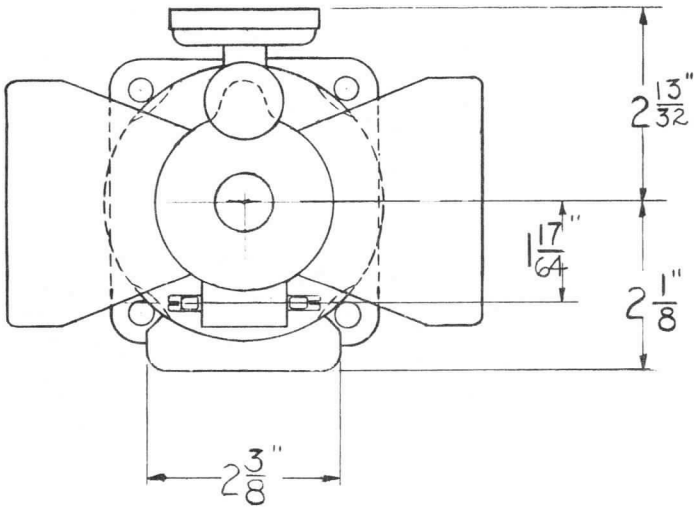

Westinghouse

WL-167

April 15, 1963

TRAVELING WAVE TUBE WL-167

10 KW Peak Power Output | .025 Duty Cycle | 5.4 to 5.9 KMC

The WL-167 is a pulsed traveling wave amplifier tube providing 10 KW peak power output with 40 db gain in the frequency range of 5400 to 5900 megacycles. A high mu gridded gun is used which permits modulation of the beam with a 500 volt applied grid pulse. Maximum duty cycle is .025. An insulated water cooled collector which can be depressed for efficiency enhancement, with cooling water in contact with ground potential elements only, is provided.

The tube is of metal-ceramic construction and includes an integral temperature compensated periodic permanent magnet focusing structure. The complete tube package weighs 14 pounds.

The tube is designed for reliable, long life operation in military environments. A continuously operating ion pump is included to minimize degradation of characteristics over extended service life. Particular emphasis has been placed on phase characteristics for use in applications such as phased array radar systems.

ELECTRICAL CHARACTERISTICS

Frequency	5400 to 5900	mc.
Heater:		
Voltage	12	Volts
Current	2.5	Amperes
Saturated Power Output, Peak	10	KW
Gain at Saturated Power Output	40	db
Duty Cycle, Max.	.025	–
Pulse Width, Max.	5	μsec.
Focusing Method	Integral periodic permanent magnet temperature compensated.	
Cold Insertion Loss, Min.	100	db

MECHANICAL RATINGS

Mounting Position	Any
Dimensions:	
Length	24"
Diameter (Not Including Connectors)	2-5/8"
Weight	14 lbs.
RF Connectors	Special 50 ohm coax.
Cooling:	
Water, at Ground Potential	.3 gpm at 10 psi pressure drop
Coolant Temperature	50° to 100°F
Shock	30G

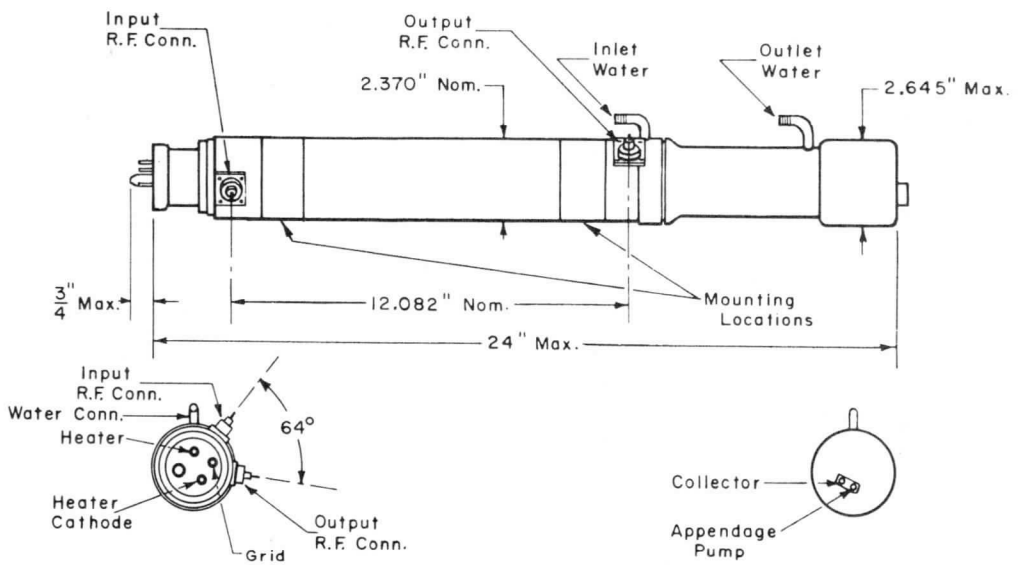

MAXIMUM RATINGS

Heater Voltage (Note 5)	14	max.	Volts
	10	min.	Volts
Anode-Circuit Voltage	25	max.	KV
	22	min.	KV
Grid Bias Voltage	−500	max.	Volts
	−220	min.	Volts
Grid Voltage for Beam on (Note 3)	250	max.	Volts
Collector Voltage (Note 2)	25	max.	KV
	11	min.	KV
Generator and Load VSWR	1.6	max.	—
Duty Cycle	.025	max.	—
Pulse Width	5	max.	μsec.
Heater Warm Up Time	300	min.	sec.
Ambient Temperature (Note 7)	180	max.	°F
	0	min.	°F
Appendage Pump Voltage	5.5	max.	KV
	2.2	min.	KV
Anode-Circuit Dissipation (Note 6)	1	max.	KW
Collector Dissipation	1	max.	KW
Grid Current, Peak	0.9	max.	Amps.
Collector Current	4.0	max.	Amps.

TYPICAL OPERATION

Electrical:		
Heater Voltage	12	Volts
Heater Current	2.5	Amps.
Anode-Circuit Voltage (Note 1)	24	KV
Anode-Circuit Current, Peak		
No RF Drive	0.6	Amps.
at Saturated Power Output	1.5	Amps.
Collector Voltage (Note 2)	12.5	KV
Collector Current, Peak		
No RF Drive	3.5	Amps.
at Saturated Power Output	2.4	Amps.
Grid Voltage:		
Beam Cut off	−250	Volts
Beam Pulsed on (Note 3)	210	Volts
Grid Current, Peak	0.6	Amps.
Appendage Pump Voltage (Note 4)	+3 KV with respect to collector	
Appendage Pump Current	3	μamp.
Duty Cycle	.01	—
Pulse Width	5	μsec.
Mechanical:		
Cooling:		
Coolant	Water	
Flow	0.3 gpm	
Pressure Drop	10 psi	
Inlet Temperature	60°F	
Mounting	by means of yokes and/or straps on 2 locations provided on 2.370" dia.	

PERFORMANCE

Frequency Range	5.4 to 5.9	KMC
Power Output, Peak	10	KW
Gain at 10 KW Power Output	40	db

NOTES

1. The anode and slow wave structure are electrically connected internally. The inner and outer conductors of the coax RF connectors, and the water fittings are also electrically connected to this structure. Therefore the anode (or circuit) is normally operated at ground potential, and the cathode at −24 KV. All voltages are referenced to cathode in the ratings, except the appendage pump, which is referenced to collector.

2. The collector is electrically insulated from the circuit and cooling water system, and may be depressed to reduce power applied in the beam. Operation without depression results in less shift in current from collector to circuit at saturated power output and any collector voltage within the maximum ratings can be used provided the collector dissipation rating is not exceeded.

3. Grid bias voltage may be any value within the maximum ratings. For proper tube operation, the applied grid pulse voltage should be adjusted to give a total of 4.1 amps. peak current to the collector and circuit. This occurs at a grid voltage between 170 and 250 volts.

4. The appendage pump is physically attached to the collector and the negative pump connection is common with the collector connection. The 3 KV should be provided with poor regulation such that current is limited to approx. 4 ma. After long storage, pump starting currents in excess of 100 μ amps. may be encountered; in normal operation, pump current is proportional to tube pressure and operation at pump currents above 10 μ amps. may indicate improper operation (violation of maximum ratings) and result in arcing and tube damage.

5. Normal tube performance and life will be obtained when heater voltage is maintained at 12 volts ± 3%.

6. The maximum circuit dissipation is allowed when tube is operating properly. The maximum dissipation can rapidly destroy the tube if it is incorrectly distributed due to such causes as high grid voltage, high RF input power, and high load VSWR.

7. At ambient temperatures above 120°F and/or where convection air currents are restricted in the gun region, a flow of air (10CFM) onto the gun in the connector region must be provided.

The WL-167 was designed and is being produced for a specific application. Additional performance information can be provided when required. Variations of the basic tube type can be provided where applications justify such changes. Inquiries are invited.

The information contained herein is supplied without assuming responsibility for infringement of patents or other rights of third parties which may result from its use. No license is granted by implication or otherwise under any patent or patent rights of Westinghouse Electric Corporation.

TRAVELING-WAVE TUBE TYPE WX-5383

10 KW Peak Output

5.0 to 6.5 Gc

The WX-5383 is a pulsed traveling wave amplifier tube providing 10 KW peak power output with 40 db gain in the frequency range of 5.0 to 6.5 gigacycles. A high mu gridded gun is used which permits modulation of the beam with a 500 volt applied grid pulse. An insulated water cooled collector which can be depressed for efficiency enhancement, with cooling water in contact with ground potential elements only, is provided.

The tube is of metal-ceramic construction and includes an integral periodic permanent magnet focusing structure. The complete tube package weighs 9 pounds.

The tube is designed for reliable, long life operation in military environments. A continuously operating ion pump is included to minimize degradation of characteristics over extended service life. Particular emphasis has been placed on phase characteristics for use in applications such as phased array radar systems.

ELECTRICAL

Frequency	5.0 to 6.5 Gc.
Heater:	
Voltage	12 Volts
Current	2.5 Amperes
Focusing Method	Integral Periodic Permanent Magnet
Cold Insertion Loss, Min.	60 db

MECHANICAL

Mounting	Yokes or Straps on Specified Locations
Mounting Position	Any
Dimensions:	
Length	23-3/4"
Diameter (Not Including Connectors)	2-5/8"
Weight	9 lbs.
RF Connectors	Special 50 ohm coax.
Cooling:	
Water, at Ground Potential	0.3 gpm at 10 psi pressure drop
Coolant Temperature	50° to 100° F

Δ The WX- number identifies a specific laboratory design; the design and, consequently, the data and type number are subject to change. No obligations are assumed to manufacture this particular device in the future unless otherwise arranged. These drawings and specifications are the property of Westinghouse Electric Corporation, Electronic Tube Division, and shall not be reproduced or copied or used as the basis for the manufacture or sale of apparatus and/or devices without permission.

Westinghouse

DEVELOPMENTAL DEVICE
Tentative Data

MAXIMUM RATINGS

Heater Voltage (Note 1)	14	max.	Volts
	10	min.	Volts
Anode-Circuit Voltage	23	max.	KV
	21	min.	KV
Grid Bias Voltage	-500	max.	Volts
	-220	min.	Volts
Grid Voltage for Beam on (Note 2)	250	max.	Volts
Collector Voltage (Note 3)	23	max.	KV
	10	min.	KV
Generator and Load VSWR	1.6	max.	-
Duty Cycle	0.01	max.	-
Pulse Width	5	max.	μsec.
Heater Warm Up Time	300	min.	sec.
Ambient Temperature (Note 4)	180	max.	°F
	32	min.	°F
Appendage Pump Voltage	5.5	max.	KV
	2.2	min.	KV
Anode-Circuit Dissipation (Note 5)	1	max.	KW
Collector Dissipation	1	max.	KW
Grid Current, Peak	0.9	max.	Amperes
Collector Current	3.4	max.	Amperes

TYPICAL OPERATION

Electrical:

Heater Voltage	12	Volts
Heater Current	2.5	Amperes
Anode-Circuit Voltage (Note 6)	22	KV
Anode-Circuit Current, Peak		
No RF Drive	1.0	Amperes
at Saturated Power Output	1.5	Amperes
Collector Voltage (Note 3)	11.5	KV
Collector Current, Peak		
No RF Drive	2.5	Amperes
at Saturated Power Output	2.0	Amperes
Grid Voltage:		
Beam Cut off	-250	Volts
Beam Pulsed on (Note 2)	210	Volts
Grid Current, Peak	0.5	Amperes
Appendage Pump Voltage (Note 7)	+3	KV
Appendage Pump Current	3	μamp.
Duty Cycle	0.005	-
Pulse Width	5	μsec.

PERFORMANCE (Note 8)

Frequency Range	5.0 to 6.5	Gc.
Saturated Peak Power Output	10	KW
Gain at Saturated Power Output	40	

NOTES

1. Normal tube performance and life will be obtained when heater voltage is maintained at 12 volts ± 3%.

2. Grid bias voltage maybe any value within the Maximum Ratings. For proper tube operation, the applied grid pulse voltage should be adjusted to give a total of 3.5 amperes peak current to the collector and circuit. This occurs at a grid voltage between 150 and 250 volts.

3. The collector is electrically insulated from the circuit and cooling water system, and may be depressed to reduce power applied in the beam. Operation without depression results in less shift in current from collector to circuit at saturated power output and any collector voltage within the maximum ratings in less shift in current from collector to circuit at saturated power output and any collector voltage within the maximum ratings can be used provided the collector dissipation rating is not exceeded.

4. At ambient temperatures above 120°F and/or where convection air currents are restricted in the gun region, a flow of air (10CFM) onto the gun in the connector region must be provided.

5. The maximum circuit dissipation is allowed when tube is operating properly. The maximum dissipation can rapidly destroy the tube if it is incorrectly distributed due to such causes as high grid voltage, high RF input power and high load VSWR.

6. The anode and slow wave structure are insulated from each other and must be electrically connected externally. Since the anode, outer conductor of the coaxil RF connectors and water fittings are electrically connected, the anode is normally operated at ground potential and the cathode at -22 KV. All voltages are referenced to the cathode except the appendage pump, which is referenced to the collector. (See Note 7)

7. The appendage pump is physically attached to the collector and the negative pump connection is common with the collector connection. The 3 KV should be provided with poor regulation such that current is limited to approximately 4 ma. After long storage, pump starting currents in excess of 100 μ amps. may be encountered; in normal operation, pump current is proportional to tube pressure and operation at pump currents above 10 μ amps. may indicate improper operation (violation of maximum ratings) and result in arcing and tube damage.

Westinghouse

DEVELOPMENTAL DEVICE
Tentative Data

8. Additional performance information can be provided when required. Variations on the basic tube type can be provided where applications justify them. Inquiries are invited.

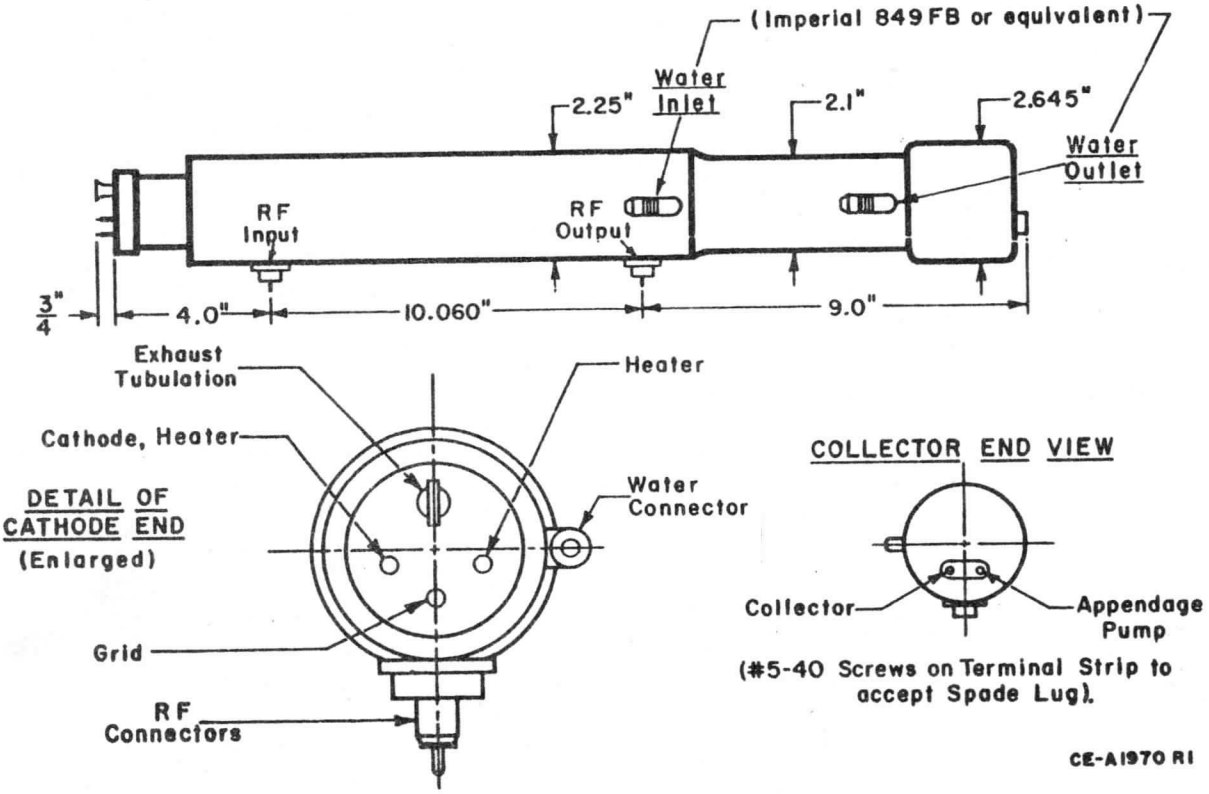

Westinghouse

PROPOSED TECHNICAL OBJECTIVE DATA FOR

WX- 5395
Δ

Date: April 27, 1964

TRAVELING WAVE TUBE TYPE WX-5395

5 KW Peak Power Output 0.2 Duty 8.5 - 9.6 Gc

The WX-5395 is a solenoid focused broadband traveling wave tube. It is particularly suited for pulse doppler radar and electronic countermeasures applications.

The tube is of metal-ceramic construction. Separate connections are provided for water cooling the tube body and the collector.

The tube is designed for reliable, long life operation in military environments. A continuously operating ion pump is included to minimize degradation of characteristics over extended life.

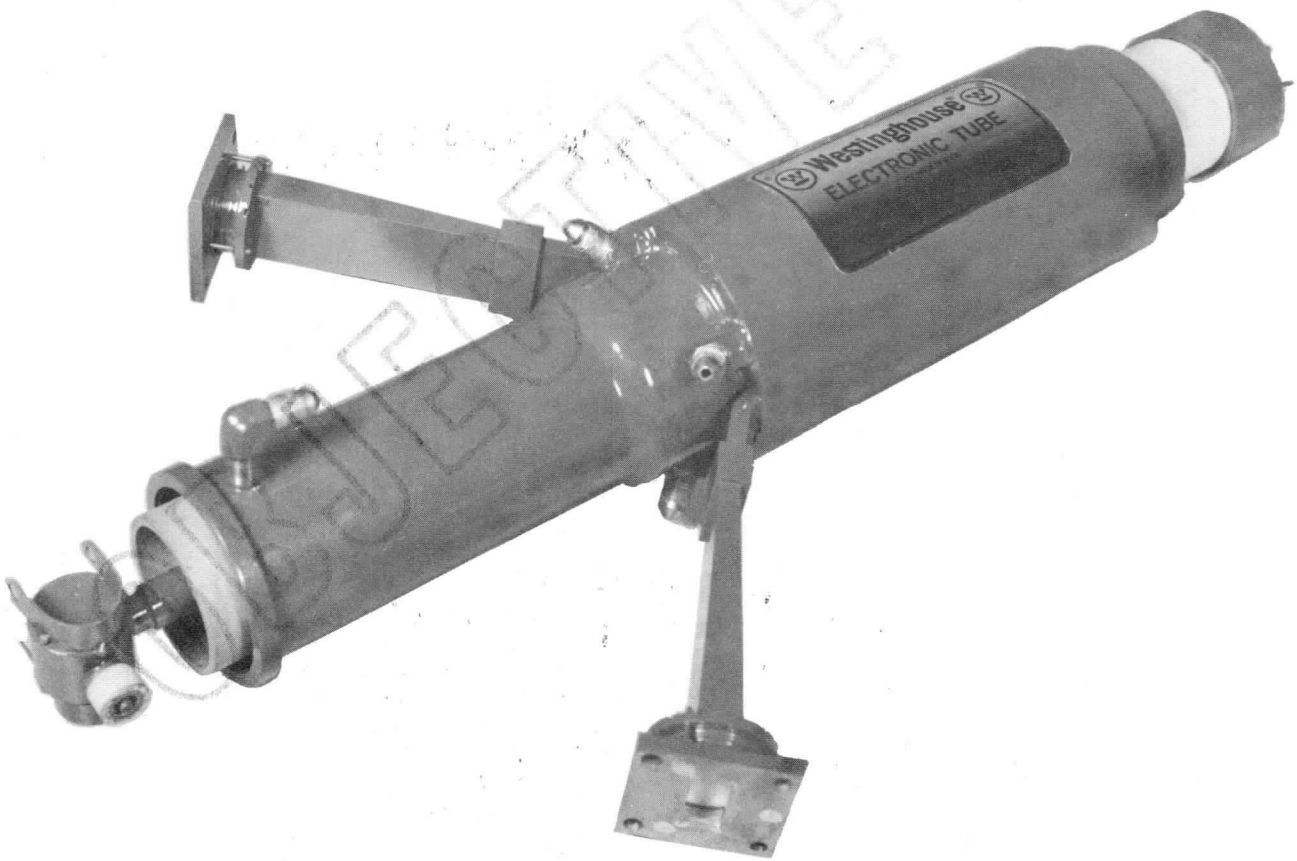

Δ The WX- number identifies a contemplated laboratory design; the design and, consequently, the data and type number are subject to change. No obligations are assumed to manufacture this particular device in the future unless otherwise arranged. These drawings and specifications are the property of Westinghouse Electric Corporation, Electronic Tube Division, and shall not be reproduced or copied or used as the basis for the manufacture or sale of apparatus and/or devices without permission.

Westinghouse

PROPOSED DEVICE
Objective Data

ELECTRICAL

Frequency	8.5 to 9.6 min.
Anode Voltage	20 Kilovolts max.
Cathode Current	3 Amperes max.
Saturation Gain	30 db min.
Gain Variation	2 db max.
Peak Power Output	5 Kilowatts min.
Duty Cycle	0.2 max.
Pulse Width	30 Microseconds max.

MECHANICAL

Length	22.3 Inches
Tube Weight	7 Pounds
Cooling (water at 20 psi)	0.5 gpm
R. F. Connectors	UG-39/U
Typical Solenoid (Note 1)	
Weight	26 pounds
Cooling (water at 20 psi)	2 gpm

NOTE

1. Not furnished as a part of the WX-5395.

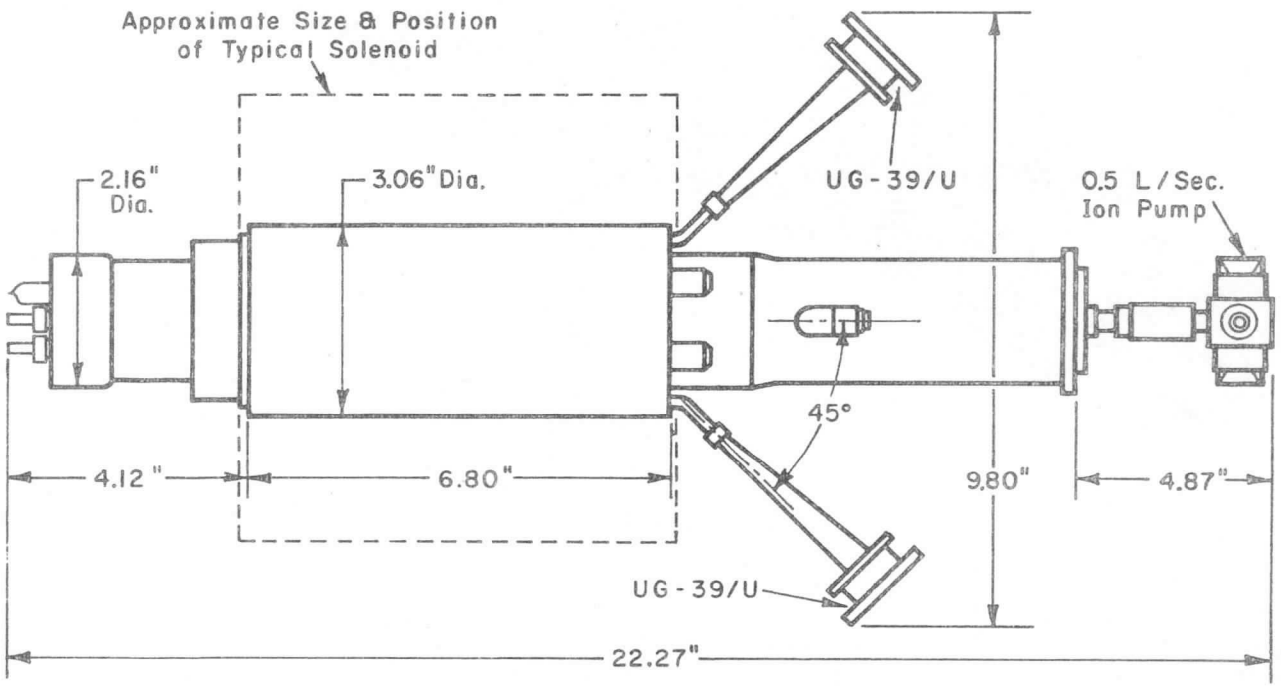

TRAVELING WAVE TUBE TYPE WX-5405

15 KW Peak Power Output 0.025 Duty Cycle 5.4 to 5.9 KMC

The WX-5405 is a pulsed traveling wave amplifier tube providing 15 KW peak power output with 45 db gain in the frequency range of 5400 to 5900 megacycles. Maximum duty cycle is 0.025. An insulated water cooled collector which can be depressed for efficiency enhancement, with cooling water in contact with ground potential elements only, is provided.

The tube is of metal-ceramic construction and includes an integral temperature compensated periodic permanent magnet focusing structure. The complete tube package weighs 14 pounds.

The tube is designed for reliable, long life operation in military environments. A continuously operating ion pump is included to minimize degradation of characteristics over extended service life. Particular emphasis has been placed on phase characteristics for use in applications such as phased array radar systems.

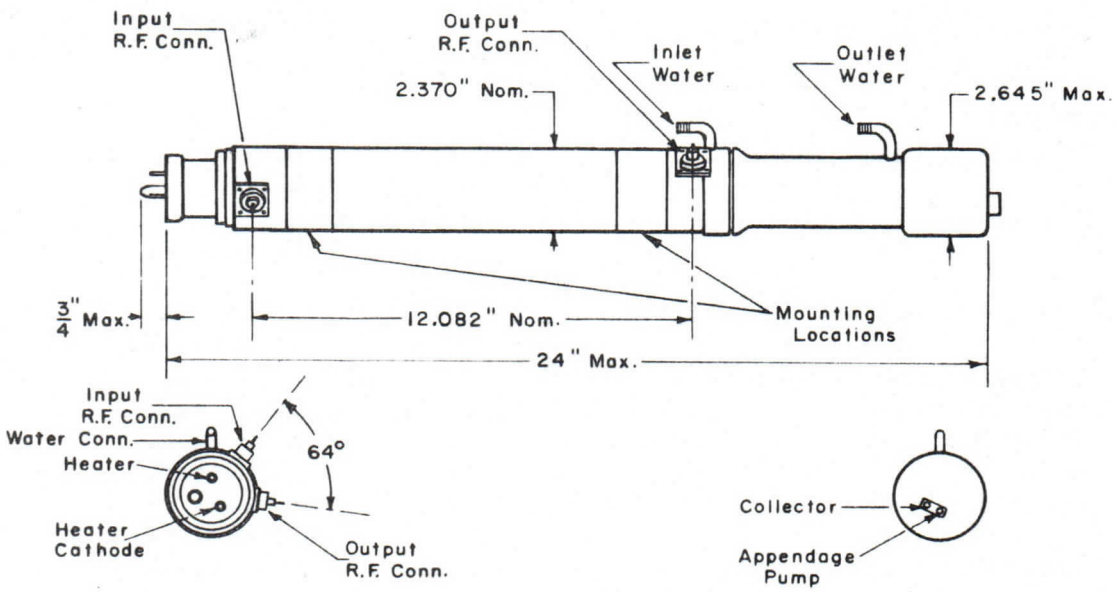

Δ The WX- number identifies a specific laboratory design; the design and, consequently, the data and type number are subject to change. No obligations are assumed to manufacture this particular device in the future unless otherwise arranged. These drawings and specifications are the property of Westinghouse Electric Corporation, Electronic Tube Division, and shall not be reproduced or copied or used as the basis for the manufacture or sale of apparatus and/or devices without permission.

Westinghouse

DEVELOPMENTAL DEVICE
Tentative Data

ELECTRICAL

Frequency	5400 to 5900 Mc.
Heater:	
Voltage	12 Volts
Current	2.5 Amperes
Saturated Power Output, Peak	15 KW
Gain at Saturated Power Output	45 db
Duty Cycle, Max.	0.025
Pulse Width, Max.	100 μsec.
Focusing Method	Integral Periodic Permanent Magnet Temperature Compensated.
Cold Insertion Loss, Min.	100 db

MECHANICAL

Mounting Position (Note 1)	Any
Dimensions:	
Length	24"
Diameter(Not Including Connectors)	2 5/8"
Weight	14 Pounds
RF Connectors	Special 50 Ohm Coax.
Cooling:	
Water, at Ground Potential (60°F)	0.3 gpm at 10 psi pressure drop
Coolant Temperature	50 to 100° F
Shock	30 G

RATINGS

Heater Voltage (Note 2)	14 max. Volts
	10 min. Volts
Anode-Circuit Voltage, Peak (Cathode Pulse Voltage)	
	25 max. KV
	22 min. KV
Collector Voltage (Note 3)	25 max. KV
	11 min. KV
Generator and Load VSWR	1.6 max.
Duty Cycle	0.025 max.
Pulse Width	100 max. μsec.
Heater Warm Up Time	300 min. sec.
Ambient Temperature (Note 4)	180 max. °F
	0 min. °F
Appendage Pump Voltage	5.5 max. KV
	2.2 min. KV
Anode-Circuit Dissipation (Note 5)	1 max. KW
Collector Dissipation	1.35 max. KW
Collector Current	5.0 max. Amps.

TYPICAL OPERATION

Heater Voltage	12 Volts
Heater Current	2.5 Amps.
Anode-Circuit Voltage (Note 6),	24 KV

Anode-Circuit Current, Peak	
No RF Drive	0.6 Amps.
at Saturated Power Output	1.5 Amps.
Collector Voltage (Note 3)	Tied to Anode Circuit
Collector Current, Peak	
No RF Drive	3.9 Amps.
at Saturated Power Output	3.5 Amps.
Duty Cycle	.01
Pulse Width	5 μsec.
Appendage Pump Voltage (Note 7)	+3 KV with respect to collector
Appendage Pump Current	3 μamp.

PERFORMANCE (Note 8)

Frequency Range	5.4 to 5.9 KMC
Power Output Peak	15 KW
Gain at 10 KW Power Output	45db

NOTES

1. Tube is mounted by yokes or straps at two specified locations (See Outline Drawing).
2. Normal tube performance and life will be obtained when the heater is maintained at 12 ± 3% volts.
3. The collector is electrically insulated from the circuit and cooling water system, and may be depressed to reduce power applied in the beam. Operation without depression results in less shift in current from collector to circuit at saturated power output and any collector voltage within the maximum ratings can be used provided the collector dissipation rating is not exceeded.
4. At ambient temperatures above 120°F and/or where convection air currents are restricted in the gun region, a flow of air (10CFM) onto the gun in the connector region must be provided.
5. The maximum circuit dissipation is allowed when tube is operating properly. The maximum dissipation can rapidly destroy the tube if it is incorrectly distributed due to such causes as high RF input power and high load VSWR.
6. The anode and slow wave structure are electrically connected internally. The inner and outer conductors of the coax RF connectors, and the water fittings are also electrically connected to this structure. Therefore the anode (or circuit) is normally operated at ground potential, and the cathode at -24 KV. All voltages are referenced to cathode in the ratings, except the appendage pump, which is referenced to collector.
7. The appendage pump is physically attached to the collector and the negative pump connection is common with the collector connection. The 3 KV should be provided with poor regulation such that current is limited to approx. 4 ma. After long storage, pump starting currents in excess of 100 μ amps. may be encountered; in normal operation, pump current is pro-

Westinghouse DEVELOPMENTAL DEVICE
Tentative Data

portional to tube pressure and operation at pump currents above 10 μ amps. may indicate improper operation (violation of maximum ratings) and result in arcing and tube damage.

8. The WX-5405 is an ungridded version of the WL-167. Additional performance information can be provided when required. Variations of the basic tube type can be provided where applications justify such changes. Inquiries are invited.

TRAVELING-WAVE TUBE TYPE WX-30046

The WX-30046 is a pulsed traveling-wave amplifier tube designed for reliable, long-life operation in military environments. In the frequency range from 8.5 to 9.6 GC., it achieves a minimum gain of 51 db in small signal operation and 44 db at saturated power output of 1 kilowatt with a duty of 0.01.

The WX-30046 employs a Pierce-type convergent-flow electron gun with an insulated focus electrode for cathode modulation. The all metal-ceramic structure includes integral temperature-compensated periodic-permanent-magnet focusing, an insulated air-cooled collector which can be depressed for efficiency enhancement and a continuously-operating ion pump to minimize degradation of characteristics during service life.

ELECTRICAL

Heater:		
Voltage	7	Volts
Current	5.7	Amperes
Focusing Method	Integral, Temperature-Compensated, Permanent Magnet	
Cold Insertion Loss (minimum)	70	db

MECHANICAL

Mounting	Yokes or Straps at locations Shown in Outline Drawing	
Mounting Position	Any	
Dimensions: (See Outline Drawing)		
Overall Length	14.812" ± 0.062"	
Diameter (Excluding Connectors & Brackets)	1.65"	
Net Weight	4	Pounds
R. F. Connectors	BRM or OSM	
Cooling (Note 1)	Forced Air	

MAXIMUM RATINGS

Heater Voltage (Note 2)	8	Max.	Volts
	6	Min.	Volts
Cathode Voltage	-15	Max.	KV
	-11	Min.	KV
Collector Voltage (Note 3)	0	Max.	Volts
	5	Max.	KV
Generator and Load VSWR	2.0	Max.	
Input and Output VSWR	1.5	Max.	
Duty Cycle	0.01	Max.	
Heater Warm Up Time	180	Min.	Sec.
Ambient Temperature (Note 1)	180	Max.	°F
	0	Min.	°F
Appendage Pump Voltage (Note 4)	5.5	Max.	KV

Δ The WX- number identifies a specific laboratory design; the design and, consequently, the data and type number are subject to change. No obligations are assumed to manufacture this particular device in the future unless otherwise arranged. These drawings and specifications are the property of Westinghouse Electric Corporation, Electronic Tube Division, and shall not be reproduced or copied or used as the basis for the manufacture or sale of apparatus and/or devices without permission.

Westinghouse DEVELOPMENTAL DEVICE
Tentative Data

TYPICAL OPERATION

Electrical:

Heater Voltage	7	Volts
Heater Current	5.7	Amperes
Anode-Circuit Voltage (Note 5)	0	Volts
Ground Current, Peak		
No RF Drive	47	ma
at Saturated Power Output	147	ma
Cathode Voltage	-13	KV
Collector Voltage (Note 3)	0	Volts
Collector Current Peak		
No RF Drive	700	ma
at Saturated Power Output	600	ma
Focus Electrode Voltage		
Beam Cut off	0	Volts
Beam Pulsed on	-13	KV
Appendage Pump Voltage (Note 4)	+ 3	KV
Appendage Pump Current	2	μ Amperes
Duty Cycle	0.01	

PERFORMANCE (Note 6)

Frequency Range	8.5 to 9.6	Gc.
Small-Signal Gain	51	db
Power Output, Peak	1.0	KW
Gain at 1.0 KW Power Output	44	db

NOTES

1. At ambient temperatures above 120°F and/or where convection currents are restricted in the gun and collector regions, a flow of air (10CFM) onto the gun and collector must be provided.

2. Normal tube performance and life will be obtained when the heater voltage is maintained at 7 volts ± 3%.

3. The collector is electrically insulated from the tube body (anode and circuit). It operates at ground potential but may be depressed to reduce power applied in the beam.

4. The appendage pump is physically attached to the collector. The negative pump connection is common with the collector connection. The 3 KV should be provided with poor regulation so that current is limited to approximately 4 milliamperes. After long storage, pump starting currents in excess of 100 μ amperes may be encountered. In normal operation, pump current is proportional to tube pressure. Operation

at pump currents above 10 μ amperes indicate improper operation (violation of maximum ratings) and may result in internal arcing and tube damage.

5. The tube is provided with a rf"Tee" which must be used to electrically connect the slow-wave structure (circuit) to the anode (ground). Failure to use the "Tee" for the helix dc return will result in charging of the circuit support rods, defocusing of the beam, and possible damage to the tube. All voltages are referenced to the anode in the ratings except the appendage pump, which is referenced to the collector.

6. The WX-30046 was designed for a specific application. Additional performance characteristics can be provided when required. Variations of the basic tube type can be provided where applications justify such changes. Inquiries are invited.

PERFORMANCE CHARACTERISTICS

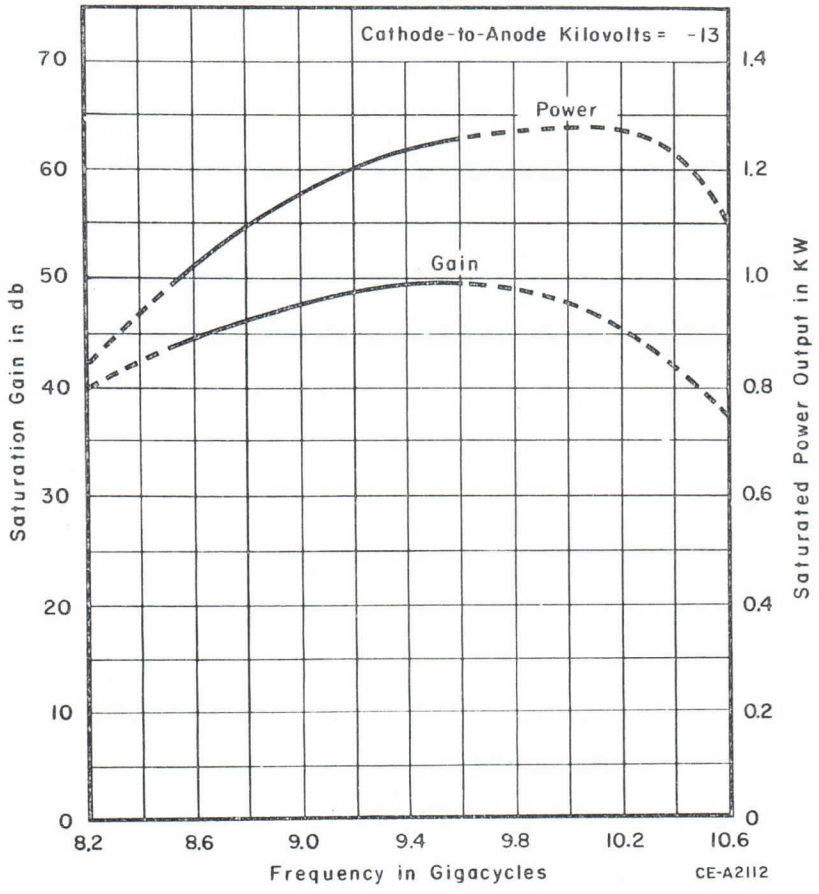

Westinghouse

DEVELOPMENTAL DEVICE
Tentative Data

SMALL-SIGNAL GAIN CHARACTERISTICS

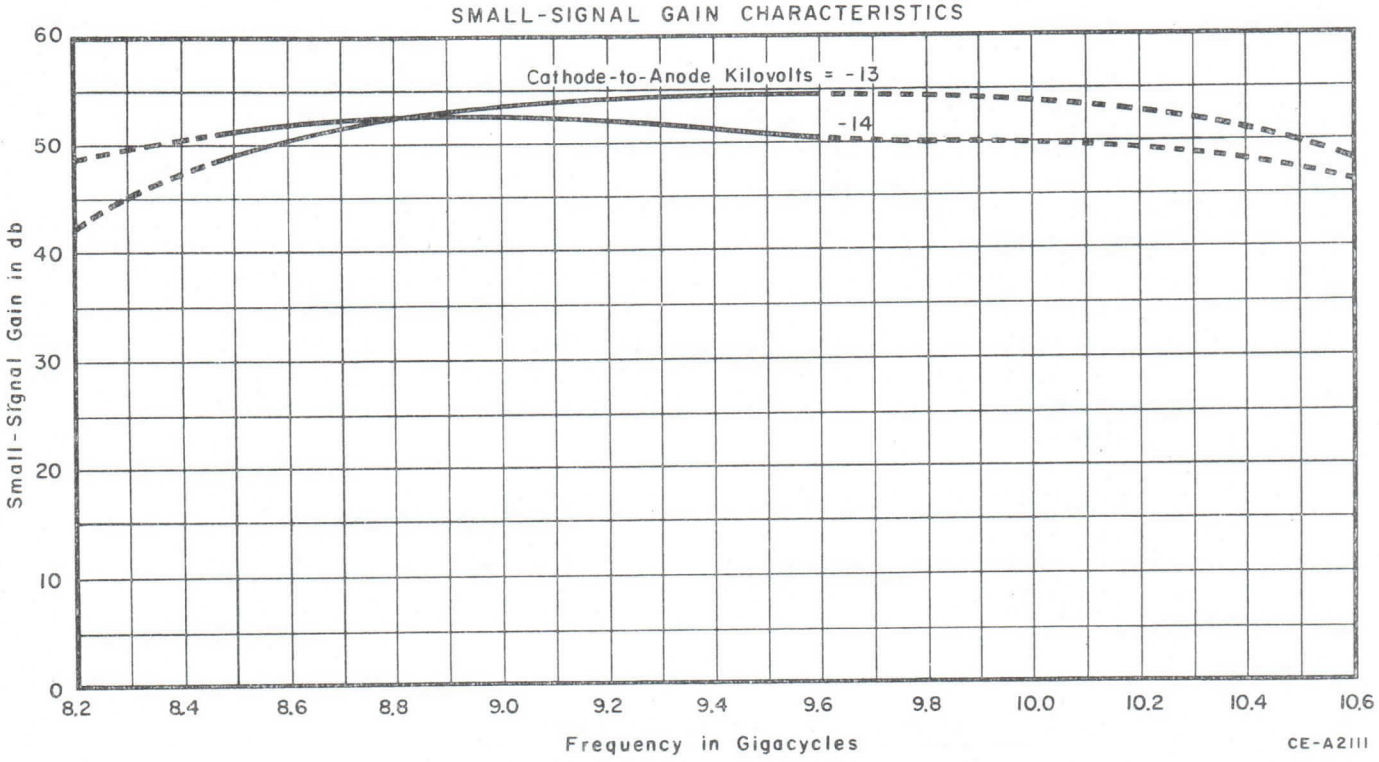

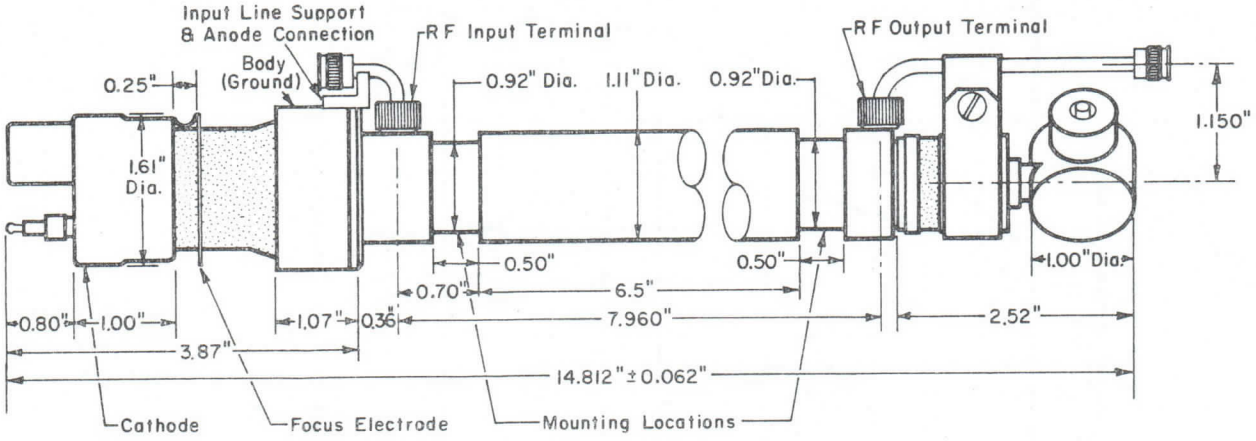

GUN END VIEW

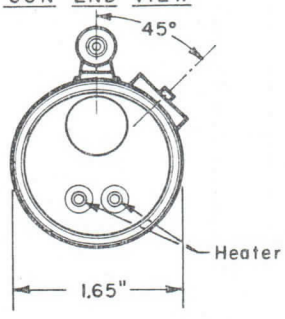

COLLECTOR END VIEW

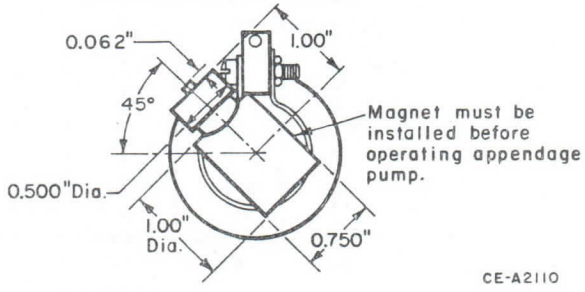

Westinghouse

IQ22 IQ25
IQ23 5846
IQ24 6040
6041

May 1, 1955

Reference Cavities

The IQ series and the 5846, 6040, and 6041 are fixed-frequency transmission type, vacuum sealed cavity tubes. They are designed for operation at specific frequencies as frequency determining devices.

These reference cavities are electrically identical except for their resonant frequencies. They are also alike mechanically except for the 5846 which is provided with an attenuator card slot. Except for the 5846, these cavities can be pressurized. The IQ23 is a direct replacement for the 6089; the latter type has been discontinued.

MECHANICAL DATA

Dimensions	See Outline Drawing
Mounting	UG-40/U Chokes in RG-52/U Waveguide
Mounting Position	Any
Net Weight	12 Ounces
Shipping Weight	4 Pounds

ELECTRICAL DATA

Maximum Ratings
Absolute Values

Incident Peak Power	2 Max. Watts
Ambient Temperature Range	−55 to +100 °C
Change in Resonant Frequency:	
With vibration or shock of 10g	±0.1 max. mc
With barometric pressure of	
One atmosphere to 5″ mercury	±0.15 max. mc
One atmosphere to 3 atmospheres	±0.15 max. mc
With temperature change of	
From 25°C to 100°C	±0.3 max. mc
From 25°C to 0°C	±0.3 max. mc
From 25° to −55°C	±1.2 max. mc

Characteristics

Loaded Q	1900 to 2400
Insertion loss at resonant frequency	4 to 6 db
Resonant frequencies:	
IQ22	9250±0.5 mc
IQ23	9280±0.5 mc
IQ24	9310±0.5 mc
IQ25	9375±0.5 mc
5846	9280±0.5 mc
6040	9308±0.5 mc
6041	9312±0.5 mc

Supersedes Data Sheet March 1, 1954 and Rev. 5-1-54

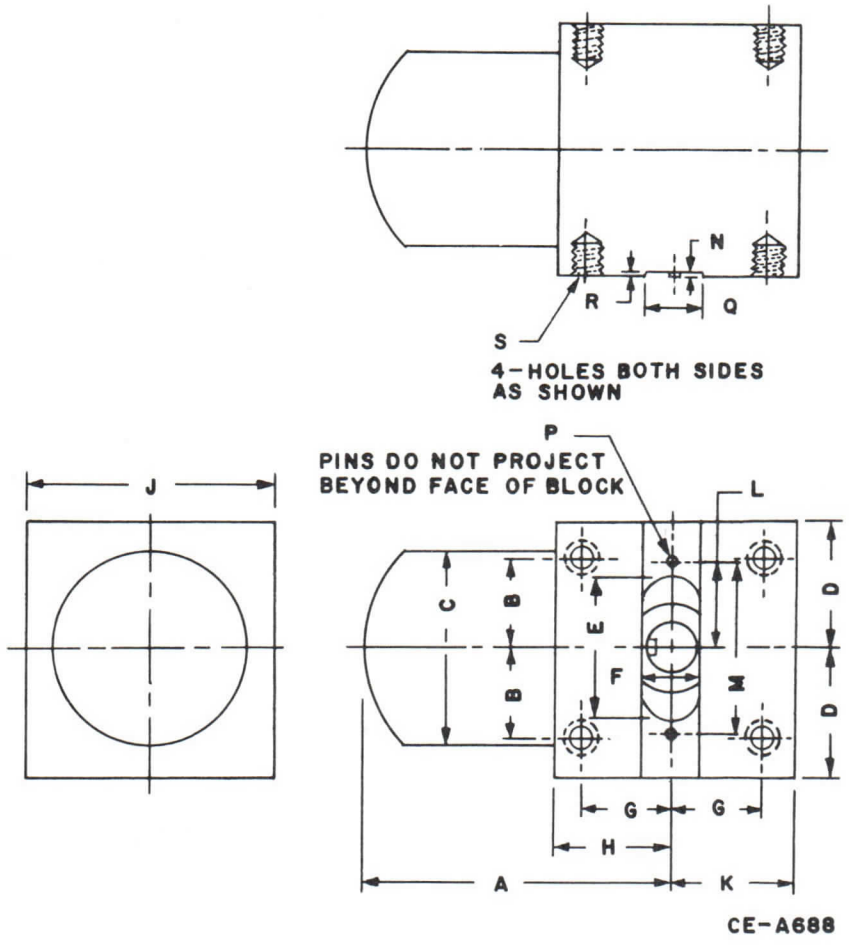

Ref.	Dimension	Ref.	Dimension
A	2.187″ max.	K	.875″ max.
B	.612″ max., .608″ min.	L	.609″ nominal
C	1.375″ max.	M	1.218″ nominal
D	.891″ max., .859″ min.	N	.030″ max., .020″ min.
E	1.000″ ref.	P	.063″ ± .002″ diameter
F	.400″ ref.	Q	.402″ max., .400″ min.
G	.642″ max., .638″ min.	R	.030″ max., .028″ min.
H	.828″ max.	S	#8-32 THD NC-2B 1/4 DP
J	1.756″ max., 1.744″ min.		

Ref. L, M, N, P, Q, R apply to WL-5846 only.

HIGH STABILITY REFERENCE CAVITY TYPE WX-3622

The WX-3622 cavity is a fixed frequency, transmission type reference cavity, designed to operate at a specific frequency as a frequency determining device. It is vacuum sealed and temperature compensated.

The WX-3622 uses a new design which will replace the 1Q22 with a matched cavity having high stability, low hysteresis and excellent temperature compensation. The WX-3622 is matched to allow increased sensitivity in AFC circuits and to aid the system designer in providing a less critical load for the klystron. The cavity has the same outline dimensions as the 1Q ' series and is mechanically interchangeable. These cavities may be operated in pressurized waveguide.

MECHANICAL

Mounting	UG-40/U Chokes in RG-52/U Waveguide
Mounting Position	Any
Net Weight	12 Ounces
Shipping Weight	24 Ounces

ELECTRICAL

MAXIMUM RATINGS
Absolute Maximum Values

Incident Peak Power (Note 1)	2 max.	Watts
Ambient Temperature Range	-55 to +125 max.	°C
Change in Resonant Frequency:		
With Shock of 50G	±0.10 max.	Mc.
With Vibration of 10G at 60 cps	±0.10 max.	Mc.
With Barometric Pressure change of:		
One atmosphere to 50mm Hg	±0.10 max.	Mc.
One atmosphere to 2 atmospheres	±0.10 max.	Mc.
With Temperature Change of:		
From 25°C to 125°C	±0.40 max.	Mc.
From 25°C to -55°C	±0.30 max.	Mc.
With Life (Note 2)	±0.30 max.	Mc.
Hysteresis (Note 3)	±0.10 max.	Mc.

Δ The WX- number identifies a specific laboratory design; the design and, consequently, the data and type number are subject to change. No obligations are assumed to manufacture this particular device in the future unless otherwise arranged. These drawings and specifications are the property of Westinghouse Electric Corporation, Electronic Tube Division, and shall not be reproduced or copied or used as the basis for the manufacture or sale of apparatus and/or devices without permission.

CHARACTERISTICS

Resonant Frequency (Note 4). .	9250.00±0.30	MC.
Input VSWR (Note 5)	1.4 max.	
Loaded Q (Note 5)	2000 to 2500	
Insertion Loss at Resonant Frequency (Note 5).	4 to 6	dB
Insertion Loss Off Resonance ± 500 Mc. (Note 6) . .	30 min.	dB
Position of 1st Voltage Minimum in Waveguide Ahead of Cavity Input Face	0.38" ±0.03"	
Resonant Frequency Pulling by Reactive Load (VSWR = 1.5) (See Figure 3)	±0.7 max.	Mc.

1. Above 5 watts a glow discharge may be expected. Higher Power levels up to 200 watts are available on special request.

2. Life test consists of 25 temperature cycles from -55°C to 125°C.

3. Hyteresis is the change in resonant frequency at 25°C after cycling to either temperature extreme.

4. Reference cavities having resonant frequencies between 9000 and 9400 Mc. with same tolerances as type WX-3622 can be supplied under different numbers.

5. See also Optional Coupling Chart, Figure 2. For equal coupling, VSWR will not be specified.

6. The WX-3622 will be free from spurious responses or leakage as specified. This is not to include the normal pass band of the cavity.

Mounting

The WX-3622 is a copper cavity which is mounted in a pressure tight aluminum block and housing. The cavity is positioned by flexible mounting rings and spring contacts which assure mechanical isolation of the cavity and the associated waveguide. Mechanical forces on the waveguide will not affect the cavity frequency.

Peak Power Ratings

The WX-3622 is designed to exhibit a glow discharge at incident power levels greater than 5 watts. This provides a check on cavity vacuum although the ultimate test of cavity performance should be its maintanance of resonant frequency especially at low temperatures. Special cavities will withstand incident peak power levels up to 200 watts without breakdown.

Temperature Compensation

By use of a choke type compensator within the cavity nose, excellent temperature compensation, low hyteresis, and long time stability are achieved. The compensation from -55°C to 125°C is achieved by choice of a compensator material that yields linear compensation. The diaphram used in this design is not a frequency determining member thus any hysteresis in it will not show up as a hysteresis in cavity frequency. Some hysteresis occurs in the WX-3622, since most metals exhibit hysteresis in their expansion, and is typically 0.03 Mc. While temperature compensation is rated on equilibrium conditions, the WX-3622 compensator will "track" temperature transients up to 3°C per minute. See Figure 1.

TEMPERATURE COMPENSATION

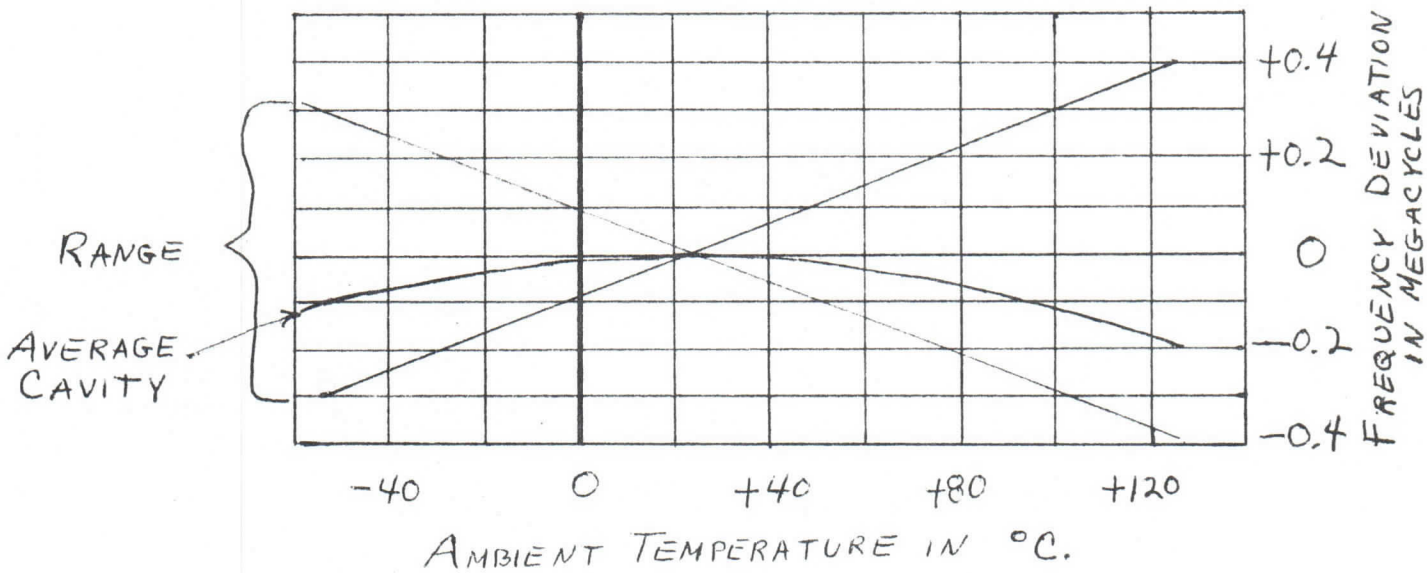

FIGURE 1

Matched Input - High Q

The WX-3622 is matched by increasing the input coupling parameter β_1.

$$\text{Transmission fraction} = To = \frac{4\beta_1\beta_2}{(1+\beta_1+\beta_2)^2}$$

$$\text{Loaded Q} = Q_L = \frac{Qu}{1+\beta_1+\beta_2}$$

$$\text{Input VSWR} = \frac{1+\beta_2}{\beta_1}$$

This causes the cavity to be asymetrical and the VSWR looking into the output face will be high. The high Q_L is obtained by increasing the unloaded Q (Qu) to 6400. The unique design of the compensator mechanism and careful processing allow this number to be realized in the nosed-in mode used.

Westinghouse

DEVELOPMENTAL DEVICE
Tentative Data

Optional Coupling

The nominal values of Q_L and Insertion Loss may be altered to customer specification according to Figure 2. Input VSWR in every case will remain 1.4 max.

OPTIMAL COUPLING CHART

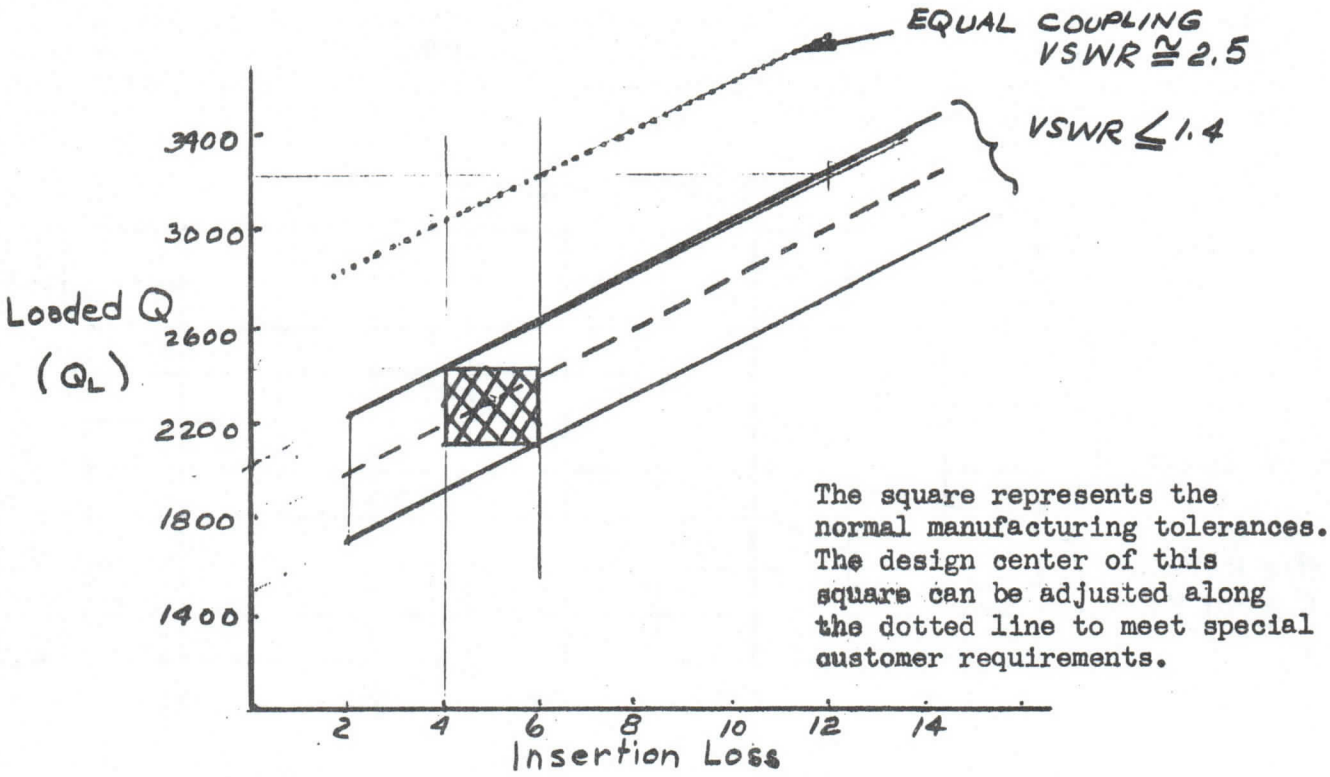

FIGURE 2

OPERATIONAL CONSIDERATIONS

Salt Spray Corrosion

The WX-3622 is not normally furnished to resist salt spray corrosion. A special plated version bearing a different number is available for those who require salt spray resistance. The plating is a cadmium plate that covers all exposed portions of the cavity assembly, both internal and external.

Test Conditions

All cavities are rigorously tested with the most modern equipment in the industry. Enviromental chambers are used to test these cavities under all required conditions of temperature and pressure. Accuracy of electrical measurements is assured by carefully designed systems with high inherent accuracy. All systems involving measurement of frequency, insertion loss, VSWR, and loaded Q are matched better than 1.05. Frequency standards are compared with WWV daily to insure accuracy.

Resonant Frequency Pulling

It is well known that a cavity must be used in a well matched system if its manufactured values of frequency and bandwidth are to be realized. A mismatched system will cause the resonant frequency to be pulled. (1) The amount of the shift is a function of the magnitude and phase of the system VSWR looking from either flange which is joined to the cavity block. In the WX-3622 or any matched cavity, the system VSWR joining the matched input will have the more serious effect on cavity frequency. The formula relating frequency pulling and system VSWR is given as:

$$\omega_T = \omega_0 + \omega_0 \frac{1}{4\,Qu}\left[\frac{\beta_1 (r_1^2 - 1)}{r_1} + \frac{\beta_2 (r_2^2 - 1)}{r_2}\right]$$

where ω_T = maximum pulled angular frequency
r_1 = VSWR looking into input system (generator)
r_2 = VSWR looking into output system (load)

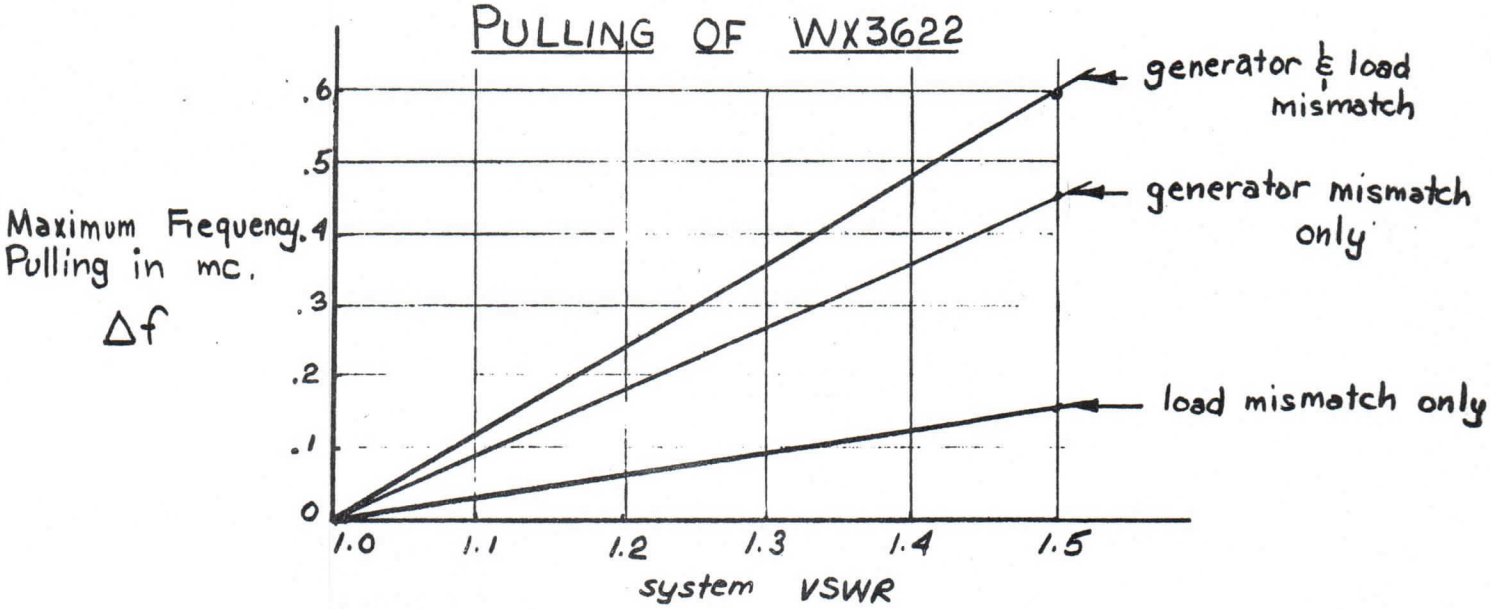

FIGURE 3

Application

The WX-3622 is useful in all X-band systems where a transmission type frequency standard of high accuracy is needed. The outstanding advantage of the WX-3622 is that poor performance of systems at low ambients is no longer necessary since the WX-3622 exhibits excellent temperature compensation down to -55°C. The WX-3622 may be used as a reflection device to good advantage in that with its low VSWR it will exhibit sharply defined minimums at closely controlled positions in the connecting waveguide.

Westinghouse

DEVELOPMENTAL DEVICE
Tentative Data

The value of the matched input can be used to advantage in system layout in that the cavity does not present a severe mismatch to the klystron source at resonance. This means that long line effects become less critical and the degree of isolation in the system can be modified. The matched cavity also provides greater gain in some AFC systems.

Care must be taken when operating the WX-3622 at low ambients to keep the water vapor content of the associated waveguide low to prevent condensation on the cavity coupling ports. Pressurization usually is the best solution.

COMMERCIAL OUTLINE

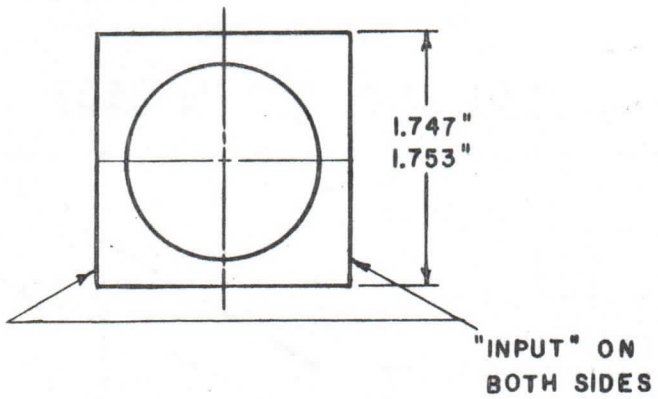

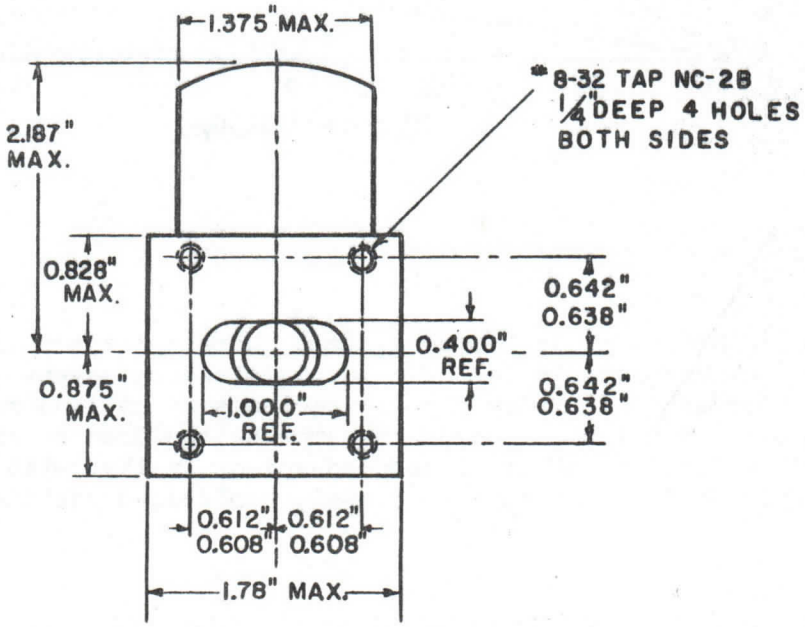

DUAL-MODE DISCRIMINATOR CAVITY TYPE WX-4334

The WX-4334 discriminator cavity is a simple, rugged, frequency stabilizing device which has applications with parametric amplifier pumps, navigation systems, beacon radars, and any system needing a stable frequency source. It is a dual mode, transmission type cavity designed for operation at a fixed frequency of 35GHz. The WX-4334 is vacuum sealed and incorporates invar construction to minimize frequency shift with ambient temperature change.

ELECTRICAL

Typical Operating Characteristics:

Ambient Temperature Range	-55 to +100 °C
Change in Resonant Frequency with Temperature From 25 to 71°C	±5.0 MHz
From 25 to 100°C	±8.0 MHz
From 25 to -55°C	±8.0 MHz
Frequency at Crossover (Note 1)	35 GHz
Loaded Q each Output	3000
Frequency Difference Between Outputs (Note 2)	10 MHz
Insertion Loss Input to Each Output	10 db max.
Insertion Loss Difference Between Outputs	1 db max.

MECHANICAL

Mounting	RG-96/U Waveguide with UG-599/U cover flanges
Mounting Position	Any
Net Weight	3.1 oz.

NOTES

1. Resonant frequencies in Ka-Band are available with a tolerance of ±10 MHz. Dual-mode cavities for other bands are being developed and requests are invited.

2. Other cavities are available, under other numbers, having different frequency-differences and discriminator curves.

Δ The WX- number identifies a specific laboratory design; the design and, consequently, the data and type number are subject to change. No obligations are assumed to manufacture this particular device in the future unless otherwise arranged. These drawings and specifications are the property of Westinghouse Electric Corporation, Electronic Tube Division, and shall not be reproduced or copied or used as the basis for the manufacture or sale of apparatus and/or devices without permission.

OPERATION

The WX-4334 is designed to provide a smooth, balanced discriminator curve when terminated with matched detectors. Figure 1 is a photograph of the oscilloscope pattern at 35,000 MHz. The frequency difference is 10 MHz between opposite peaks.

A typical circuit employing the WX-4334 as a frequency sensing element is shown in Figure 2. In this circuit the WX-4334 provides a zero output signal at the desired operating frequency. Each output essentially looks like a separate cavity, since, due to the degeneracy established, two cavities exist electrically in one physical cavity; therefore excellent symmetry between outputs is obtained. If matched frequency vs. power detectors are used, the error signal slope will be equal on each side of zero resulting in simple uniform control of frequency.

The WX-4334 may be operated in any position and under extreme conditions of shock and vibration. The exterior of the cavity is nickel plated to withstand salt spray and extreme humidity. It may be operated at high altitude or in a pressurized waveguide system. Modifications for special applications or various frequencies can be provided on request.

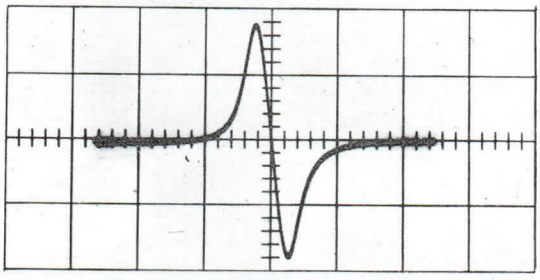

FIGURE 1 – OSCILLOSCOPE TRACE OF DETECTED OUTPUT (SEE FIGURE 2)

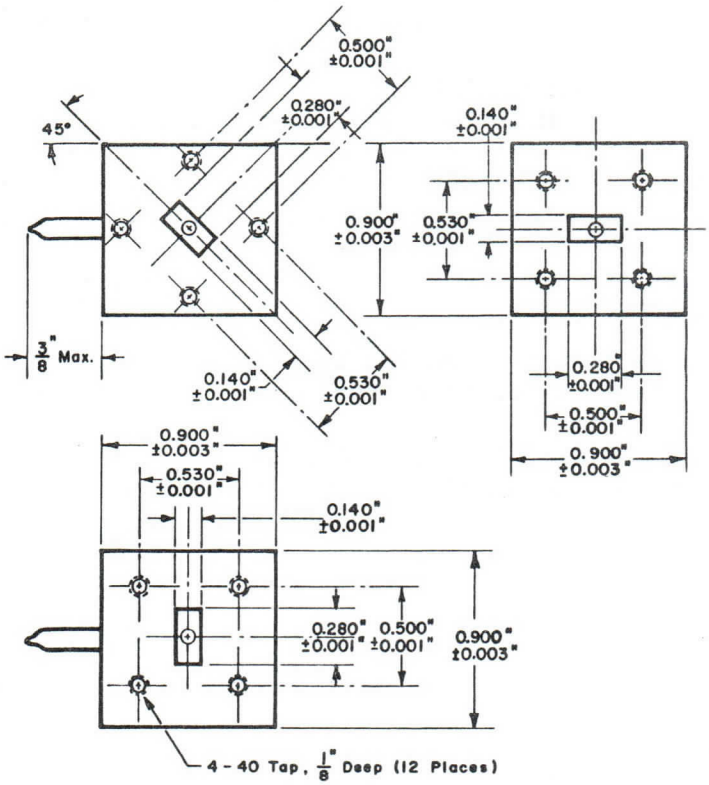

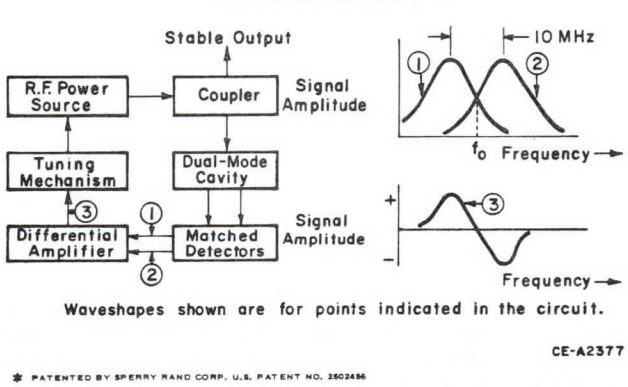

FIGURE 2 – TYPICAL CIRCUIT

DUAL MODE DISCRIMINATOR CAVITY TYPE WX-4515

The WX-4515 is a fixed tuned, dual mode reference cavity for use as a discriminator. It is a rugged, temperature compensated, frequency stabilizing device which has applications with parametric amplifier pumps, beacon radars, navigation systems, and any system needing a stable frequency source. The WX-4515 is a transmission type cavity designed for operation at a fixed frequency of 35,000 Mc. It is hermetically sealed and by use of a choke type compensator element excellent temperature compensation and long time frequency stability are achieved.

ELECTRICAL

TYPICAL OPERATING CHARACTERISTICS

Ambient Temperature Range	-55 to +100°C
Change in Resonant Frequency with Temperature Change of -55 to +100°C	+2 Mc
Loaded Q each Output	3000 Ave.
Frequency at Cross over (Note 1)	35,000 ±10 Mc
Frequency Difference Between Outputs (Note 2)	10 Max. Mc
Frequency of left output shall be less than frequency of right output	See Figure 1
Insertion Loss from Input to Each Output	10 Max. dB
Insertion Loss Difference Between Outputs	1 Max. dB

MECHANICAL

Mounting	RG-96/U Waveguide with UG-599/U cover flanges
Mounting Position	Any
Net Weight	3.5 Ounces

Δ The WX- number identifies a specific laboratory design; the design and, consequently, the data and type number are subject to change. No obligations are assumed to manufacture this particular device in the future unless otherwise arranged. These drawings and specifications are the property of Westinghouse Electric Corporation, Electronic Tube Division, and shall not be reproduced or copied or used as the basis for the manufacture or sale of apparatus and/or devices without permission.

Westinghouse

DEVELOPMENTAL DEVICE
Tentative Data

NOTES

1. Resonant frequencies in K-band are available with a tolerance of ±10 Mc. Dual mode cavities in other bands are under development and requests are invited.

2. Other cavities with different frequency differences are available with accompanying change in discriminator curve or under different number.

The WX-4515 is designed to provide a smooth, balanced discriminator curve when terminated with matched detectors. Figure 1 is a representation of the cavity at 35,000 Mc where the frequency difference is 10 Mc maximum between opposite peaks.

A typical circuit employing the WX-4515 as a frequency sensing element is shown in Figure 2. In this circuit the WX-4515 provides a zero output signal at the desired operating frequency. Each output essentially looks like a separate cavity since, due to the degeneracy established, two cavities exist electrically in one physical cavity; therefore excellent symmetry between outputs is obtained. If matched frequency vs. power detectors are used, the error signal slope will be equal on each side of zero resulting in simple uniform control of frequency.

The WX-4515 may be operated in any position and under extreme conditions of shock and vibration. The exterior of the cavity is nickel plated to withstand salt spray and extreme humidity. It may be operated at high altitude or in a pressurized waveguide system. Modifications for special applications or various frequencies can be provided on request.

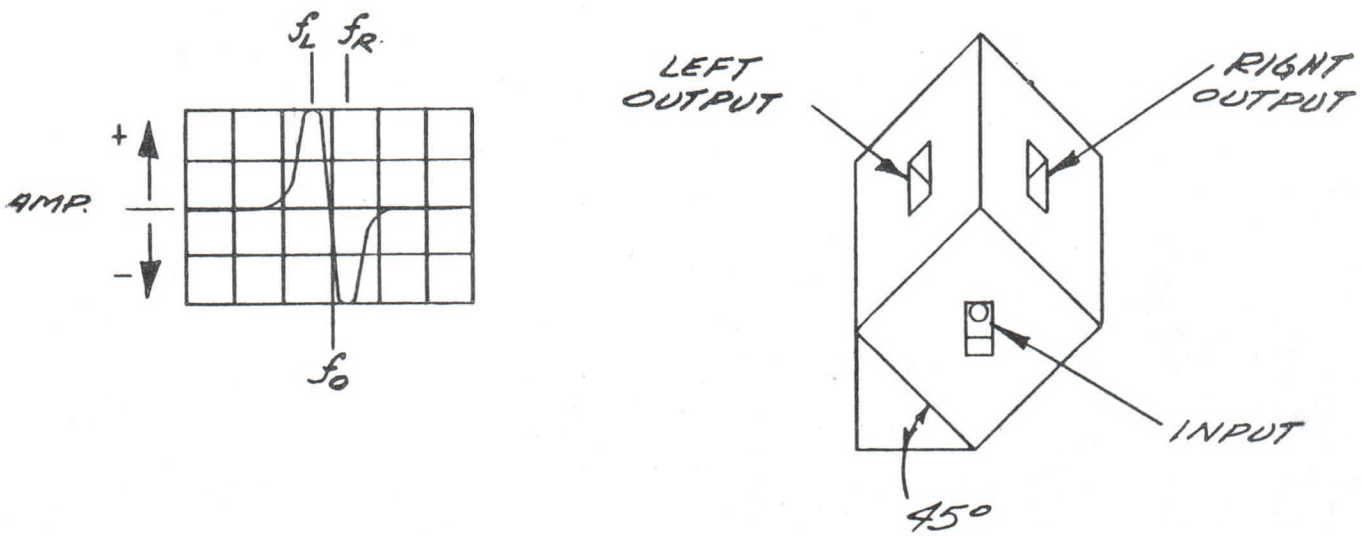

FIGURE 1

TYPICAL TEST CIRCUIT *

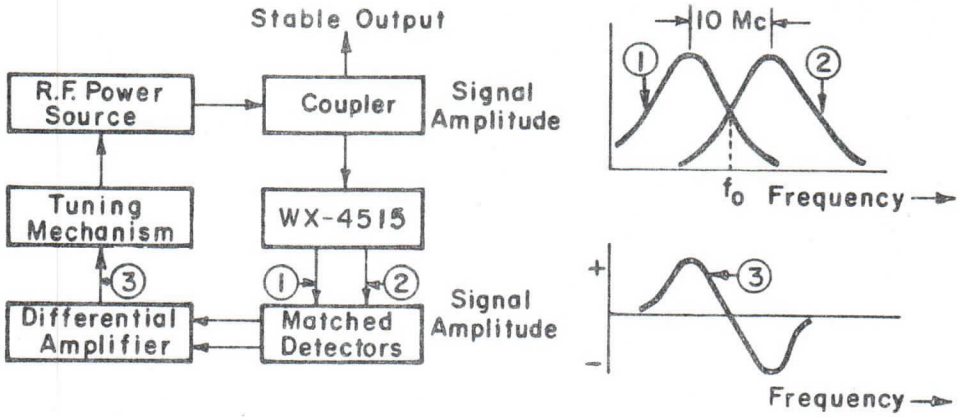

Waveshapes shown are for points indicated in the circuit.

* PATENTED BY SPERRY RAND CORP. U.S. PATENT NO. 2502456

CE-A1813

FIGURE 2

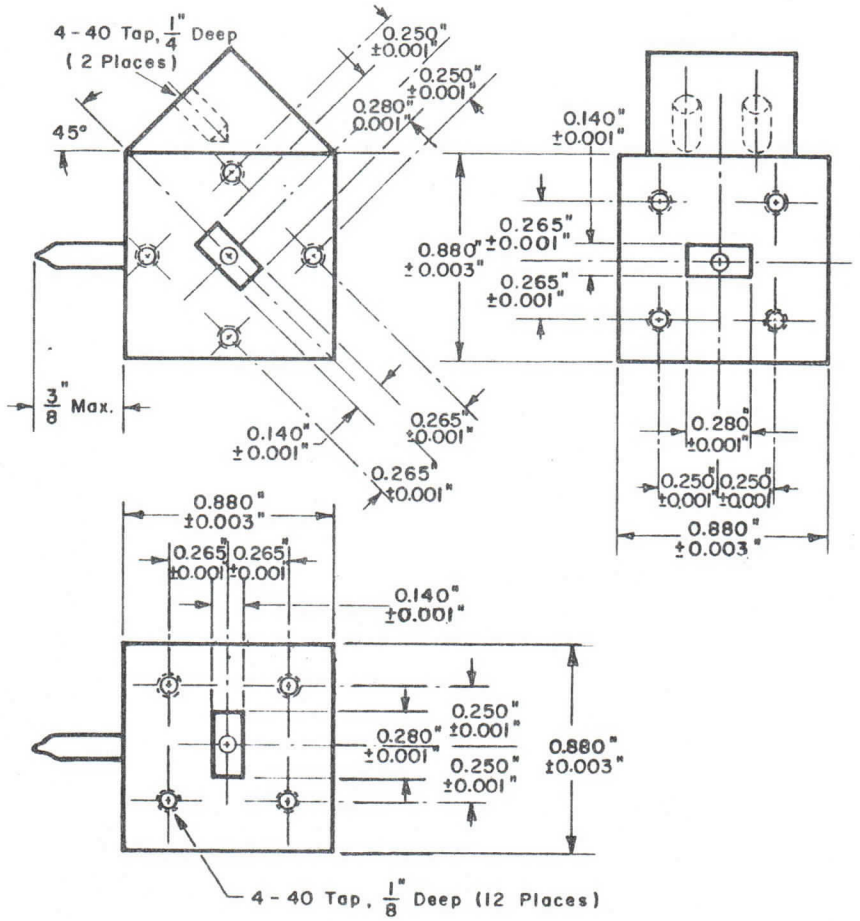

DUAL MODE DISCRIMINATOR CAVITY TYPE WX-4568

The WX-4568 stalo cavity is a Ku-band, fixed frequency, dual mode transmission type cavity. It is designed to operate at a fixed frequency as a frequency determining device. The WX-4568 is vacuum sealed and incorporates invar construction to minimize frequency shift with ambient temperature change.

The WX-4568 is designed to provide a smooth, balanced discriminator curve when operated with matched detectors.

The WX-4568 may be operated in any position and under extreme conditions of shock and vibration. The exterior of the cavity is finished to withstand salt spray and extreme humidity. It may be operated at high altitude or in a pressurized waveguide system. Additional information is available and modifications for special applications can be provided on special request.

MECHANICAL

Dimensions	See Outline Drawing
Mounting	RG-91/U Waveguide
Mounting Position	Any
Net Weight	10 oz.
Shipping Weight	31 oz.

RATINGS

Ambient Temperature Range	-54 to +100 max.	°C
Change in Resonant Frequency with Temperature Change: (Note 1)		
From 25 to 71 °C	±1.5 max.	Mc.
From 25 to 100 °C	±3.0 max.	Mc.
From 25 to -55 °C	±3.0 max.	Mc.
Loaded Q each Output	7500 min.	
Frequency Difference Between Outputs (Note 2)	1.8 max.	Mc.
Insertion Loss Input to each Output	10 max.	dB
Insertion Loss Difference Between Outputs	1 max.	dB
Frequency	Note 3	

Δ The WX- number identifies a specific laboratory design; the design and, consequently, the data and type number are subject to change. No obligations are assumed to manufacture this particular device in the future unless otherwise arranged. These drawings and specifications are the property of Westinghouse Electric Corporation, Electronic Tube Division, and shall not be reproduced or copied or used as the basis for the manufacture or sale of apparatus and/or devices without permission.

Westinghouse

DEVELOPMENTAL DEVICE
Tentative Data

NOTES

1. Cavities, having a different type number, are available combining the characteristics of type WX-4568 with greatly improved temperature stability.

2. Cavities, having different type numbers, are available with other frequency differentials between outputs.

3. Resonant frequencies in Ku-band are available with a tolerance of ± 0.5 Mc. Dual mode cavities in other bands are under development and requests are invited.

Test Conditions

All cavities are rigorously tested with the most modern equipment in the industry. Environmental chambers are used to test these cavities under all conditions of temperature and pressure. Accuracy of electrical measurements is assured by carefully designed systems with high inherent accuracy. All systems involving measurement of frequency, insertion loss, and loaded Q are matched better than 1.05. Frequency standards are compared with WWV daily to insure Westinghouse's high standards of accuracy.

A typical circuit employing the WX-4568 as a frequency sensing element is shown in Figure 1. In this circuit the WX-4568 provides a zero output signal at the desired operating frequency. Each output sees essentially a separate cavity. Since the two cavities electrically are in reality one cavity physically, excellent symmetry between outputs is obtained. If matched, frequency vs. power, detectors are used, the error signal slope will be equal each side of zero, resulting in simple, uniform control of frequency.

TYPICAL TEST CIRCUIT

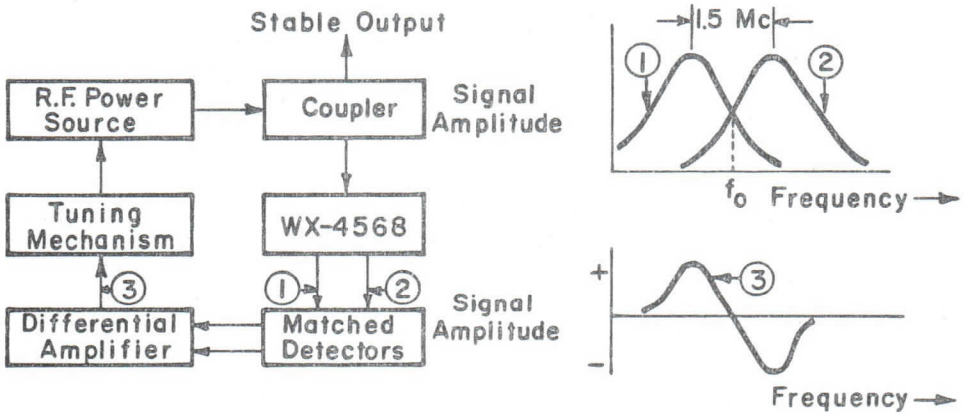

Waveshapes shown are for points indicated in the circuit.

CE-A1815

FIGURE 1

COMMERCIAL OUTLINE

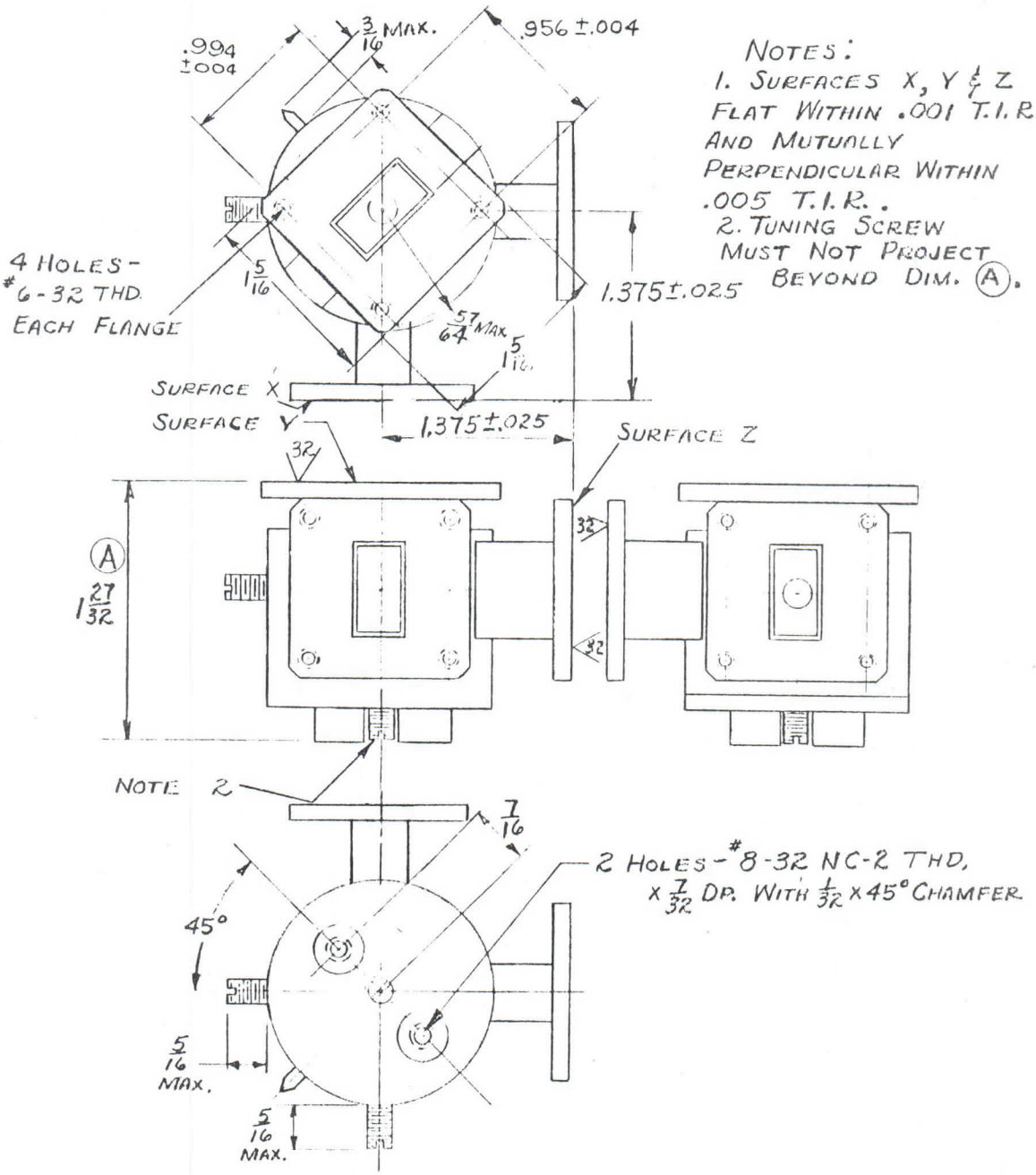

NOTES:
1. SURFACES X, Y & Z FLAT WITHIN .001 T.I.R AND MUTUALLY PERPENDICULAR WITHIN .005 T.I.R..
2. TUNING SCREW MUST NOT PROJECT BEYOND DIM. (A).

The information contained herein is supplied without assuming responsibility for infringement of patents or other rights of third parties which may result from its use. No license is granted by implication or otherwise under any patent or patent rights of Westinghouse Electric Corporation.

WX-4570

WAVEGUIDE FILTER

The WX-4570 filter is a Ku-band fixed frequency, four cavity, bandpass type waveguide filter. It is designed to operate at a fixed frequency as a bandpass filter with particular emphasis on rejection above or below the pass region. The WX-4570 is vacuum sealed and incorporates invar construction to provide minimum distortion of the pass band with ambient temperature change.

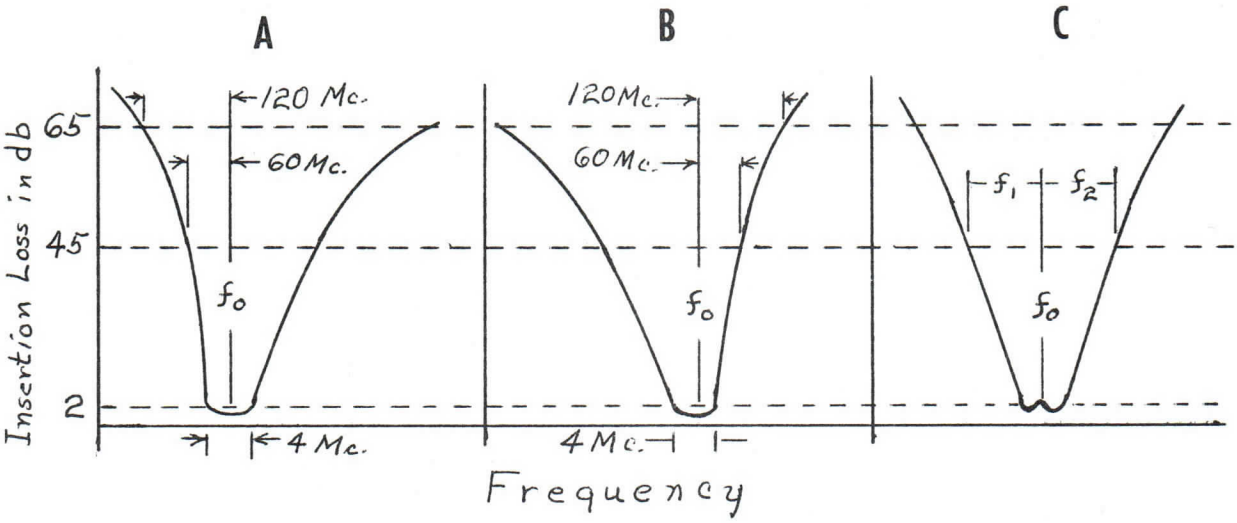

Fig. 1 - Typical Filter response curves

Due to its tight coupling, the WX-4570 provides the design engineer with a filter extremely useful for applications where space is critical and frequencies requiring rejection are not spaced close, both above and below the frequency of interest. The WX-4570 can be tuned to provide a symmetrical response curve of the overcoupled type (Fig. 1c).

For a given application, any of the three general response curves can be supplied.

The WX-4570 may be operated in any position and under extreme conditions of shock and vibration. The exterior of the cavity is finished to withstand salt spray and extreme humidity. These filters may be operated at high altitude or in a pressurized waveguide system. Additional information is available and modifications for special applications can be provided on special request.

Δ The WX- number identifies a specific laboratory design; the design and, consequently, the data and type number are subject to change. No obligations are assumed to manufacture this particular device in the future unless otherwise arranged. These drawings and specifications are the property of Westinghouse Electric Corporation, Electronic Tube Division, and shall not be reproduced or copied or used as the basis for the manufacture or sale of apparatus and/or devices without permission.

Westinghouse TENTATIVE DATA

Ratings:

Temperature	-55 to 100 °C
Pressure	1×10^{-3} to 2280 mm of Hg
Incident Power	200 Watts Max.

Mechanical Data:

Dimensions	See Outline Drawing
Mounting	RG91/U Waveguide
Mounting Position	Any
Net Weight	4 oz.
Shipping Weight	25 oz.

Electrical Characteristics (curve shown as Fig. 1a)

Frequency - Resonant frequencies in Ku-band are available. Waveguide filters in other bands are under development and requests are invited.

VSWR at f_o	1.3 max.
VSWR Pass Band	1.4 max
I.L. Pass Band	2.2 db. max.
I.L. f_o - 60 mc	42 db.
I.L. f_o - 120 mc	65 db.

Test Conditions:

All filters are rigorously tested with the most modern equipment in the industry. Environmental chambers are used to test these filters under all conditions of temperature and pressure. Accuracy of electrical measurements is assured by carefully designed systems with high inherent accuracy. All systems involving measurement of frequency, insertion loss, and VSWR are matched better than 1.05. Frequency standards are compared with WWV daily to insure Westinghouse's standard of accuracy.

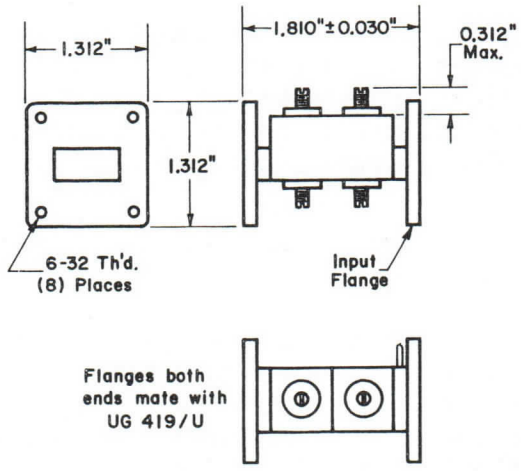

The WX-4655 is a dual mode, transmission type cavity designed for operation at a fixed frequency in the range 51 - 57 KMC. The WX-4655 is vacuum sealed and incorporates invar construction to minimize frequency shift with ambient temperature change.

Electrical Data:

Typical Operating Characteristics:

Ambient Temperature Range	-55 to +100	°C
Change in Resonant Frequency with Temperature of -		
From 25 to 71°C	± 8.0	Mc
From 25 to 100°C	± 12.0	Mc
From 25 to -55°C	± 12.0	Mc
Loaded Q each Output	2280	
Frequency Difference Between Outputs .... (Other frequency differences are available with accompanying change in discriminator curve)	25	Mc
Insertion Loss Input to Each Output	10	db max.
Insertion Loss Difference Between Outputs	1	db max.

Frequency - Resonant frequencies are available with a tolerance of ± 10 Mc.

Δ The WX- number identifies a specific laboratory design; the design and, consequently, the data and type number are subject to change. No obligations are assumed to manufacture this particular device in the future unless otherwise arranged. These drawings and specifications are the property of Westinghouse Electric Corporation, Electronic Tube Division, and shall not be reproduced or copied or used as the basis for the manufacture or sale of apparatus and/or devices without permission.

Mechanical Data:

Dimensions	See Outline Drawing.
Mounting	RG-98/U waveguide with UG385 cover flanges
Mounting Position	Any

The WX-4655 is designed to provide a smooth, balanced discriminator curve when terminated with matched detectors. Figure 1 is a typical oscilloscope pattern.

A typical circuit employing the WX-4655 as a frequency sensing element is shown in Figure 2. In this circuit the WX-4655 provides a zero output signal at the desired operating frequency. Each output essentially looks like a separate cavity since, due to the degeneracy established, two cavities exist electrically in one physical cavity; therefore excellent symmetry between outputs is obtained. If matched frequency vs. power detectors are used, the error signal slope will be equal on each side of zero, resulting in simple uniform control of frequency.

The WX-4655 may be operated in any position and under extreme conditions of shock and vibration. The exterior of the cavity is suitably finished to withstand salt spray and extreme humidity. It may be operated at high altitude or in a pressurized waveguide system. Modifications for special applications or various frequencies can be provided on request.

OSCILLOSCOPE REPRESENTATION
OF DISCRIMINATOR CURVE

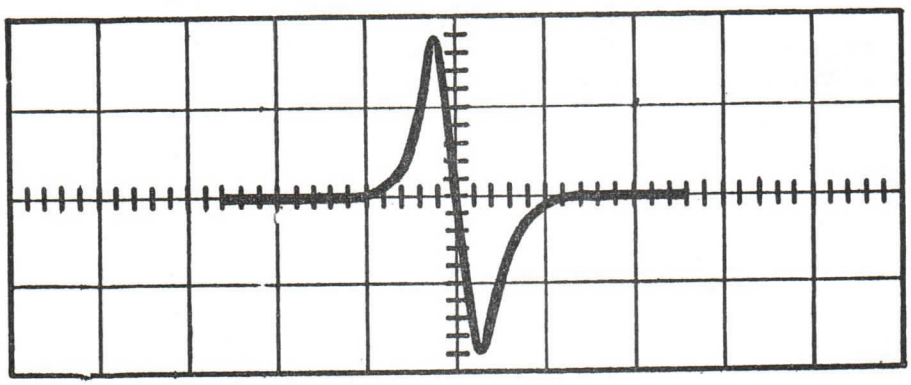

CE-A1658

FIGURE 1

TYPICAL TEST CIRCUIT

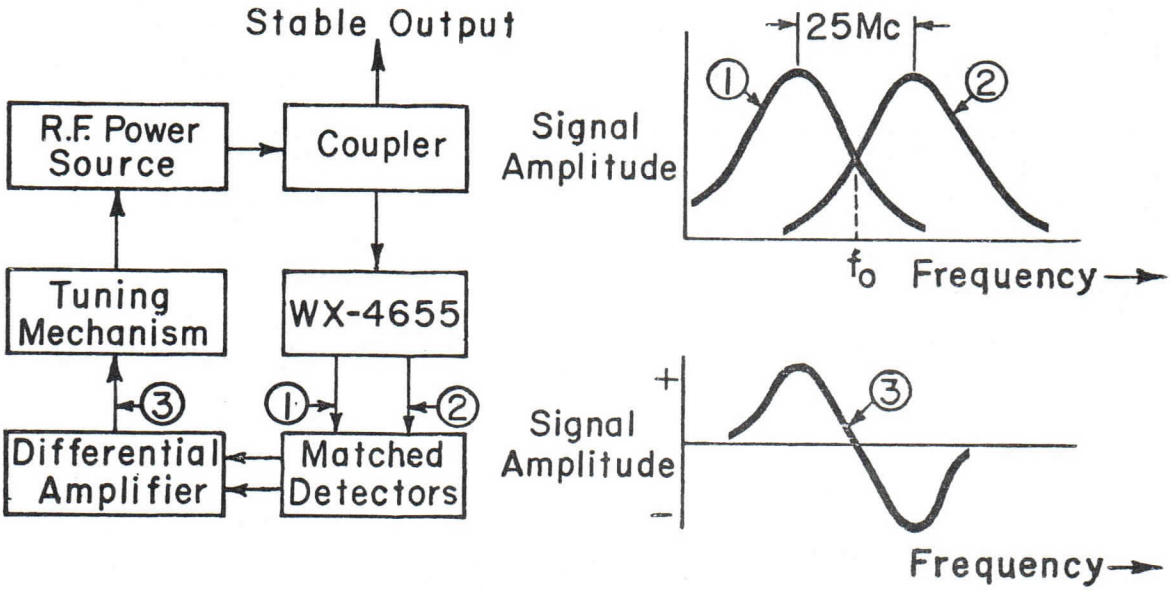

Waveshapes shown are for points indicated in the circuit.

CE-A1718

FIGURE 2

Westinghouse TENTATIVE DATA

OUTLINE DRAWING

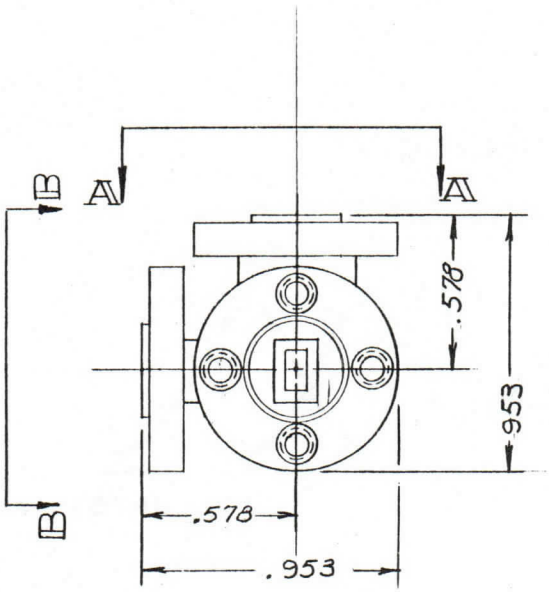

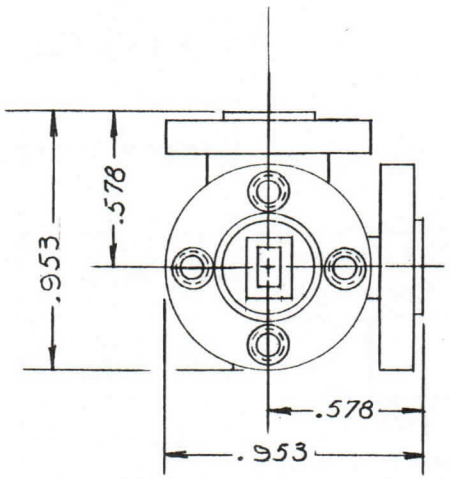

VIEW B-B

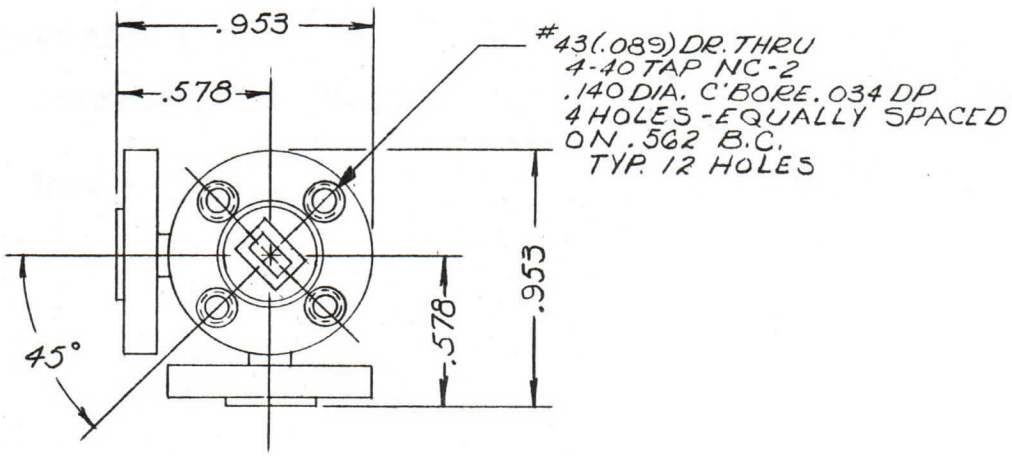

VIEW A-A

DUAL-MODE DISCRIMINATOR CAVITY TYPE WX-4334

The WX-4334 discriminator cavity is a simple, rugged, frequency stabilizing device which has applications with parametric amplifier pumps, navigation systems, beacon radars, and any system needing a stable frequency source. It is a dual mode, transmission type cavity designed for operation at a fixed frequency of 35GHz. The WX-4334 is vacuum sealed and incorporates invar construction to minimize frequency shift with ambient temperature change.

ELECTRICAL

Typical Operating Characteristics:

Ambient Temperature Range	-55 to +100 °C
Change in Resonant Frequency with Temperature From 25 to 71°C	±5.0 MHz
From 25 to 100°C	±8.0 MHz
From 25 to -55°C	±8.0 MHz
Frequency at Crossover (Note 1)	35 GHz
Loaded Q each Output	3000
Frequency Difference Between Outputs (Note 2)	10 MHz
Insertion Loss Input to Each Output	10 db max.
Insertion Loss Difference Between Outputs	1 db max.

MECHANICAL

Mounting	RG-96/U Waveguide with UG-599/U cover flanges
Mounting Position	Any
Net Weight	3.1 oz.

NOTES

1. Resonant frequencies in Ka-Band are available with a tolerance of ±10 MHz. Dual-mode cavities for other bands are being developed and requests are invited.

2. Other cavities are available, under other numbers, having different frequency-differences and discriminator curves.

Δ The WX- number identifies a specific laboratory design; the design and, consequently, the data and type number are subject to change. No obligations are assumed to manufacture this particular device in the future unless otherwise arranged. These drawings and specifications are the property of Westinghouse Electric Corporation, Electronic Tube Division, and shall not be reproduced or copied or used as the basis for the manufacture or sale of apparatus and/or devices without permission.

WESTINGHOUSE ELECTRIC CORPORATION, ELECTRONIC TUBE DIVISION, ELMIRA, NEW YORK
PRINTED IN U.S.A.

OPERATION

The WX-4334 is designed to provide a smooth, balanced discriminator curve when terminated with matched detectors. Figure 1 is a photograph of the oscilloscope pattern at 35,000 MHz. The frequency difference is 10 MHz between opposite peaks.

A typical circuit employing the WX-4334 as a frequency sensing element is shown in Figure 2. In this circuit the WX-4334 provides a zero output signal at the desired operating frequency. Each output essentially looks like a separate cavity, since, due to the degeneracy established, two cavities exist electrically in one physical cavity; therefore excellent symmetry between outputs is obtained. If matched frequency vs. power detectors are used, the error signal slope will be equal on each side of zero resulting in simple uniform control of frequency.

The WX-4334 may be operated in any position and under extreme conditions of shock and vibration. The exterior of the cavity is nickel plated to withstand salt spray and extreme humidity. It may be operated at high altitude or in a pressurized waveguide system. Modifications for special applications or various frequencies can be provided on request.

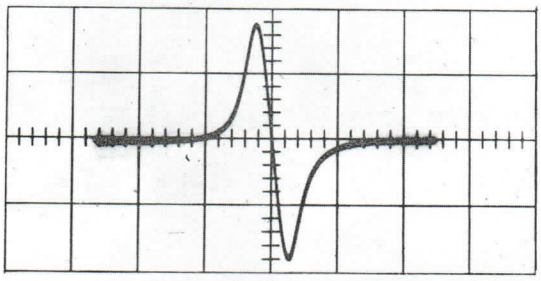

FIGURE 1 – OSCILLOSCOPE TRACE OF DETECTED OUTPUT (SEE FIGURE 2)

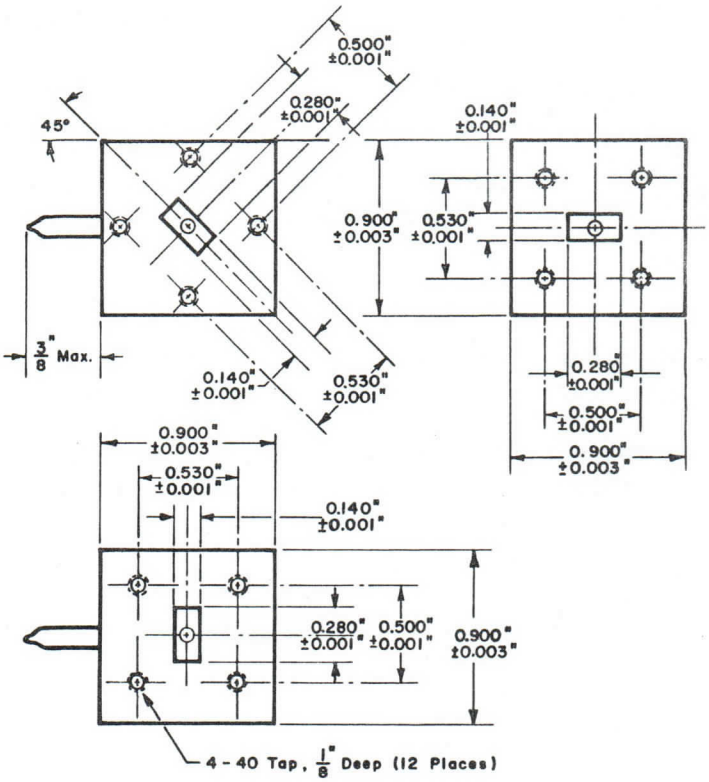

TYPICAL CIRCUIT *

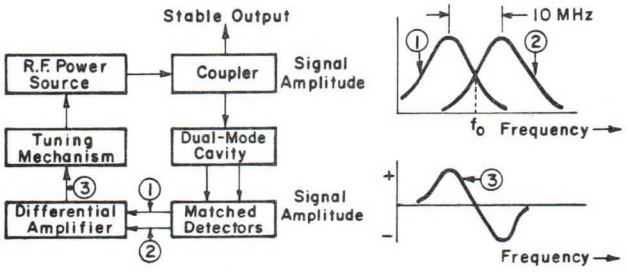

Waveshapes shown are for points indicated in the circuit.

CE-A2377 RI

* PATENTED BY SPERRY RAND CORP. U.S. PATENT NO. 2802456

FIGURE 2 – TYPICAL CIRCUIT

WX-4570

WAVEGUIDE FILTER

The WX-4570 filter is a Ku-band fixed frequency, four cavity, bandpass type waveguide filter. It is designed to operate at a fixed frequency as a bandpass filter with particular emphasis on rejection above or below the pass region. The WX-4570 is vacuum sealed and incorporates invar construction to provide minimum distortion of the pass band with ambient temperature change.

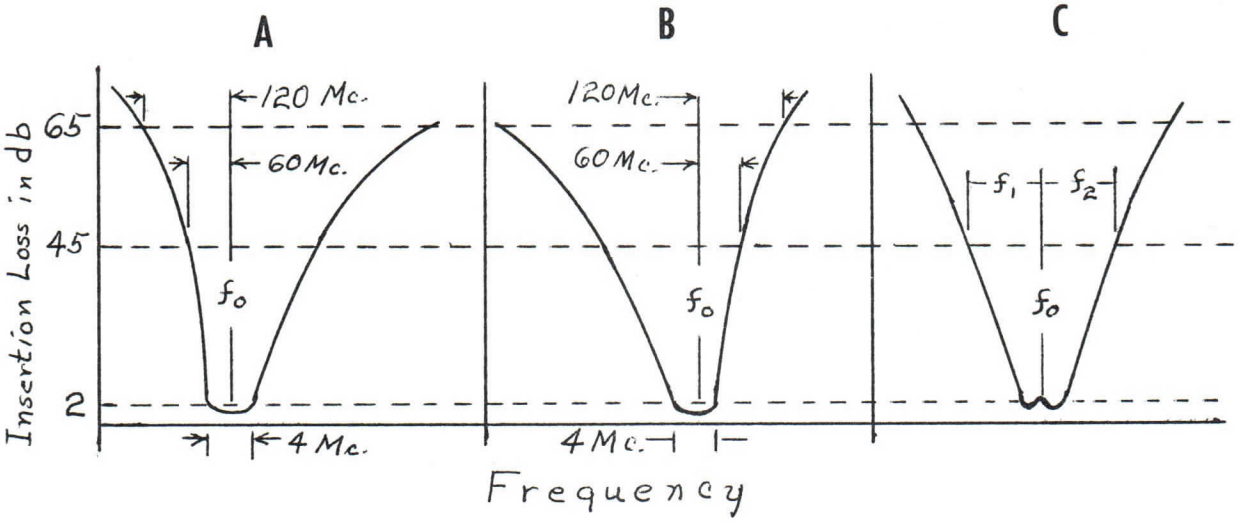

Fig. 1 - Typical Filter response curves

Due to its tight coupling, the WX-4570 provides the design engineer with a filter extremely useful for applications where space is critical and frequencies requiring rejection are not spaced close, both above and below the frequency of interest. The WX-4570 can be tuned to provide a symmetrical response curve of the overcoupled type (Fig. 1c).

For a given application, any of the three general response curves can be supplied.

The WX-4570 may be operated in any position and under extreme conditions of shock and vibration. The exterior of the cavity is finished to withstand salt spray and extreme humidity. These filters may be operated at high altitude or in a pressurized waveguide system. Additional information is available and modifications for special applications can be provided on special request.

Δ The WX- number identifies a specific laboratory design; the design and, consequently, the data and type number are subject to change. No obligations are assumed to manufacture this particular device in the future unless otherwise arranged. These drawings and specifications are the property of Westinghouse Electric Corporation, Electronic Tube Division, and shall not be reproduced or copied or used as the basis for the manufacture or sale of apparatus and/or devices without permission.

Westinghouse TENTATIVE DATA

Ratings:

Temperature	-55 to 100 °C
Pressure	1×10^{-3} to 2280 mm of Hg
Incident Power	200 Watts Max.

Mechanical Data:

Dimensions	See Outline Drawing
Mounting	RG91/U Waveguide
Mounting Position	Any
Net Weight	4 oz.
Shipping Weight	25 oz.

Electrical Characteristics (curve shown as Fig. 1a)

Frequency - Resonant frequencies in Ku-band are available. Waveguide filters in other bands are under development and requests are invited.

VSWR at f_o	1.3 max.
VSWR Pass Band	1.4 max
I.L. Pass Band	2.2 db. max.
I.L. f_o - 60 mc	42 db.
I.L. f_o - 120 mc	65 db.

Test Conditions:

All filters are rigorously tested with the most modern equipment in the industry. Environmental chambers are used to test these filters under all conditions of temperature and pressure. Accuracy of electrical measurements is assured by carefully designed systems with high inherent accuracy. All systems involving measurement of frequency, insertion loss, and VSWR are matched better than 1.05. Frequency standards are compared with WWV daily to insure Westinghouse's standard of accuracy.

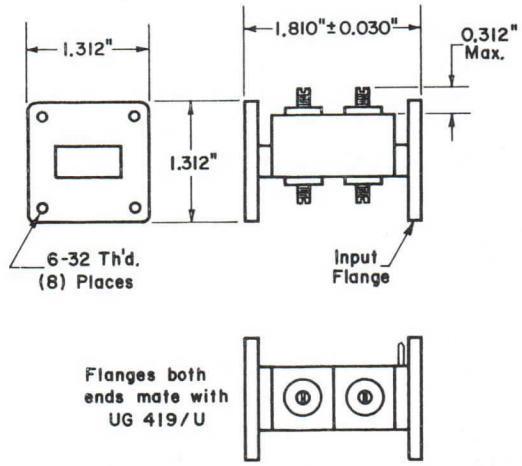

DUAL MODE DISCRIMINATOR CAVITY TYPE WX-5379

The WX-5379 stalo cavity is an X-band, fixed frequency, dual mode transmission type cavity. It is designed to operate at a fixed frequency as a frequency determining device. The WX-5379 is vacuum sealed and incorporates invar construction to minimize frequency shift with ambient temperature change.

The WX-5379 is designed to provide a smooth, balanced discriminator curve when operated with matched detectors.

The WX-5379 may be operated in any position and under extreme conditions of shock and vibration. The exterior of the cavity is finished to withstand salt spray and extreme humidity. It may be operated at high altitude or in a pressurized waveguide system. Additional information is available and modifications for special applications can be provided on special request.

MECHANICAL

Mounting	RG-52/U Waveguide
Mounting	Any

RATINGS

Ambient Temperature Range	-54 to +100 max.	°C
Change in Resonant Frequency with Temperature Change: (Note 1)		
From 25 to 71 °C	±1.5 max.	Mc.
From 25 to 100 °C	±3.0 max.	Mc.
From 25 to -55 °C	±3.0 max.	Mc.
Loaded Q each Output	6500 min.	
Frequency Difference Between Outputs (Note 2)	1.8 max.	Mc.
Insertion Loss Input to each Output	10 max.	dB
Insertion Loss Difference Between Outputs	1 max.	dB
Frequency	Note 3	

Δ The WX- number identifies a specific laboratory design; the design and, consequently, the data and type number are subject to change. No obligations are assumed to manufacture this particular device in the future unless otherwise arranged. These drawings and specifications are the property of Westinghouse Electric Corporation, Electronic Tube Division, and shall not be reproduced or copied or used as the basis for the manufacture or sale of apparatus and/or devices without permission.

Westinghouse

DEVELOPMENTAL DEVICE
Tentative Data

NOTES

1. Cavities, having a different type number, are available combining the characteristics of type WX-5379 with greatly improved temperature stability.

2. Cavities, having different type numbers, are available with other frequency differentials between outputs.

3. Resonant frequencies in the range of 8.2 to 9.8 Gc. are available with a tolerance of ± 0.5 Mc. Dual mode cavities in other bands are under development and requests are invited.

Test Conditions

All cavities are rigorously tested with the most modern equipment in the industry. Environment chambers are used to test these cavities under all conditions of temperature and pressure. Accuracy of electrical measurements is assured by carefully designed systems with high inherent accuracy. All systems involving measurement of frequency, insertion loss, and loaded Q are matched better than 1.05. Frequency standards are compared with WWV daily to insure Westinghouse's high standards of accuracy.

A typical circuit employing the WX-5379 as a frequency sensing element is shown in Figure 1. In this circuit the WX-5379 provides a zero output signal at the desired operating frequency. Each output sees essentially a separate cavity. Since the two cavities electrically are in reality one cavity physically, excellent symmetry between outputs is obtained. If matched, frequency vs. power, detectors are used, the error signal slope will be equal each side of zero, resulting in simple, uniform control of frequency.

TYPICAL TEST CIRCUIT*

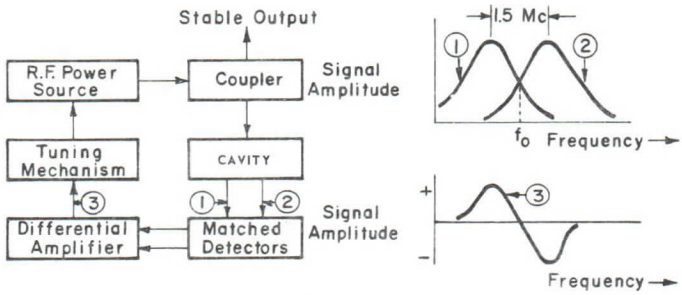

Waveshapes shown are for points indicated in the circuit.

* PATENTED BY SPERRY RAND CORP. U.S. PATENT NO. 2602456

DUAL MODE DISCRIMINATOR CAVITY TYPE WX-5380

The WX-5380 stalo cavity is an X-band, fixed frequency, dual mode transmission type cavity. It is designed to operate at a fixed frequency as a frequency determining device. The WX-5380 is vacuum sealed and incorporates invar construction to minimize frequency shift with ambient temperature change.

The WX-5380 is designed to provide a smooth, balanced discriminator curve when operated with matched detectors.

The WX-5380 may be operated in any position and under extreme conditions of shock and vibration. The exterior of the cavity is finished to withstand salt spray and extreme humidity. It may be operated at high altitude or in a pressurized waveguide system. Additional information is available and modifications for special applications can be provided on special request.

MECHANICAL

Mounting	RG-52/U Waveguide
Mounting Position	Any

RATINGS

Ambient Temperature Range	-54 to +100 max.	°C
Change in Resonant Frequency with Temperature Change: (Note 1)		
From 25 to 71 °C	±1.5 max.	Mc.
From 25 to 100 °C	±3.0 max.	Mc.
From 25 to -55 °C	±3.0 max.	Mc.
Loaded Q each Output	6500 min.	
Frequency Difference Between Outputs (Note 2)	1.8 max.	Mc.
Insertion Loss Input to each Output	10 max.	dB
Insertion Loss Difference Between Outputs	1 max.	dB
Frequency	Note 3	

Δ The WX- number identifies a specific laboratory design; the design and, consequently, the data and type number are subject to change. No obligations are assumed to manufacture this particular device in the future unless otherwise arranged. These drawings and specifications are the property of Westinghouse Electric Corporation, Electronic Tube Division, and shall not be reproduced or copied or used as the basis for the manufacture or sale of apparatus and/or devices without permission.

Westinghouse

DEVELOPMENTAL DEVICE
Tentative Data

NOTES

1. Cavities, having a different type number, are available combining the characteristics of type 5380 with greatly improved temperature stability.

2. Cavities, having different type numbers, are available with other frequency differentials between outputs.

3. Resonant frequencies in the range from 9.7 to 12.4 Gc are available with a tolerance of ± 0.5 Mc. Dual mode cavities in other bands are under development and requests are invited.

Test Conditions

All cavities are rigorously tested with the most modern equipment in the industry. Environmental chambers are used to test these cavities under all conditions of temperature and pressure. Accuracy of electrical measurements is assured by carefully designed systems with high inherent accuracy. All systems involving measurement of frequency, insertion loss, and loaded Q are matched better than 1.05. Frequency standards are compared with WWV daily to insure Westinghouse's high standards of accuracy.

A typical circuit employing the WX-5380 as a frequency sensing element is shown in Figure 1. In this circuit the WX-5380 provides a zero output signal at the desired operating frequency. Each output sees essentially a separate cavity. Since the two cavities electrically are in reality one cavity physically, excellent symmetry between outputs is obtained. If matched, frequency vs. power, detectors are used, the error signal slope will be equal each side of zero, resulting in simple, uniform control of frequency.

TYPICAL TEST CIRCUIT

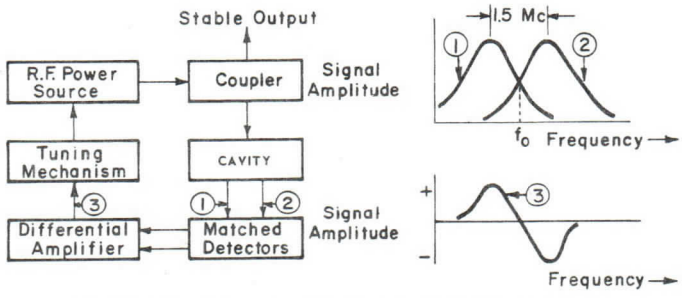

Waveshapes shown are for points indicated in the circuit.

* PATENTED BY SPERRY RAND CORP. U.S. PATENT NO. 2502484

CE-A1814

DUAL MODE DISCRIMINATOR CAVITY TYPE WX-5402

The WX-5402 stalo cavity is a Ku-band, fixed frequency, dual mode transmission type cavity. It is designed to operate at a fixed frequency as a frequency determining device. The WX-5402 is vacuum sealed and incorporates invar construction to minimize frequency shift with ambient temperature change.

The WX-5402 is designed to provide a smooth, balanced discriminator curve when operated with matched detectors.

The WX-5402 may be operated in any position and under extreme conditions of shock and vibration. The exterior of the cavity is finished to withstand salt spray and extreme humidity. It may be operated at high altitude or in a pressurized waveguide system. Additional information is available and modifications for special applications can be provided on special request.

MECHANICAL

Dimensions	See Outline Drawing
Mounting	RG-91/U Waveguide
Mounting Position	Any
Net Weight	10 oz.
Shipping Weight	31 oz.

RATINGS

Ambient Temperature Range	-54 to +100 max. °C
Change in Resonant Frequency with Temperature Change: (Note 1)	
From 25 to 71 °C	±1.5 max. Mc.
From 25 to 100 °C	±3.0 max. Mc.
From 25 to -55 °C	±3.0 max. Mc.
Loaded Q each Output	6500 min.
Frequency Difference Between Outputs (Note 2)	2.8 max. Mc.
	1.8 min. Mc.
Insertion Loss Input to each Output	10 max. dB
Insertion Loss Difference Between Outputs	1 max. dB
Frequency	Note 3

Δ The WX- number identifies a specific laboratory design; the design and, consequently, the data and type number are subject to change. No obligations are assumed to manufacture this particular device in the future unless otherwise arranged. These drawings and specifications are the property of Westinghouse Electric Corporation, Electronic Tube Division, and shall not be reproduced or copied or used as the basis for the manufacture or sale of apparatus and/or devices without permission.

Westinghouse

DEVELOPMENTAL DEVICE
Tentative Data

NOTES

1. Cavities, having a different type number, are available combining the characteristics of type WX-5402 with greatly improved temperature stability.
2. Cavities, having different type numbers, are available with other frequency differentials between outputs.
3. Resonant frequencies in Ku-band from 12.4 to 18 Gc are available with a tolerance of ± 0.5 Mc. Dual mode cavities in other bands are under development and requests are invited.

Test Conditions

All cavities are rigorously tested with the most modern equipment in the industry. Environmental chambers are used to test these cavities under all conditions of temperature and pressure. Accuracy of electrical measurements is assured by carefully designed systems with high inherent accuracy. All systems involving measurement of frequency, insertion loss, and loaded Q are matched better than 1.05. Frequency standards are compared with WWV daily to insure Westinghouse's high standards of accuracy.

A typical circuit employing the WX-5402 as a frequency sensing element is shown in Figure 1. In this circuit the WX-5402 provides a zero output signal at the desired operating frequency. Each output sees essentially a separate cavity. Since the two cavities electrically are in reality one cavity physically, excellent symmetry between outputs is obtained. If matched, frequency vs. power, detectors are used, the error signal slope will be equal each side of zero, resulting in simple, uniform control of frequency.

TYPICAL TEST CIRCUIT*

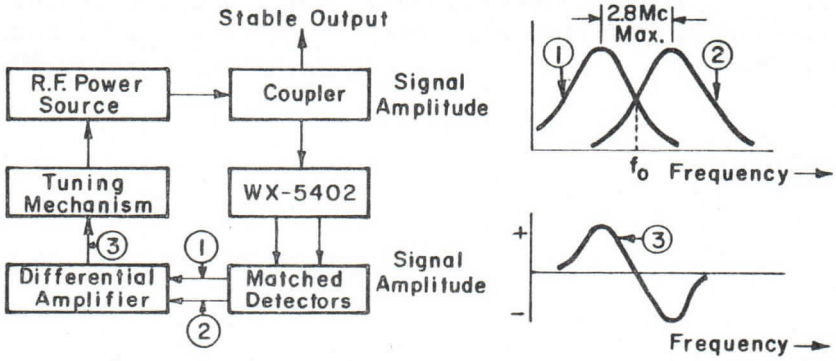

Waveshapes shown are for points indicated in the circuit.

CE-A2103

* PATENTED BY SPERRY RAND CORP. U.S. PATENT NO. 2502456

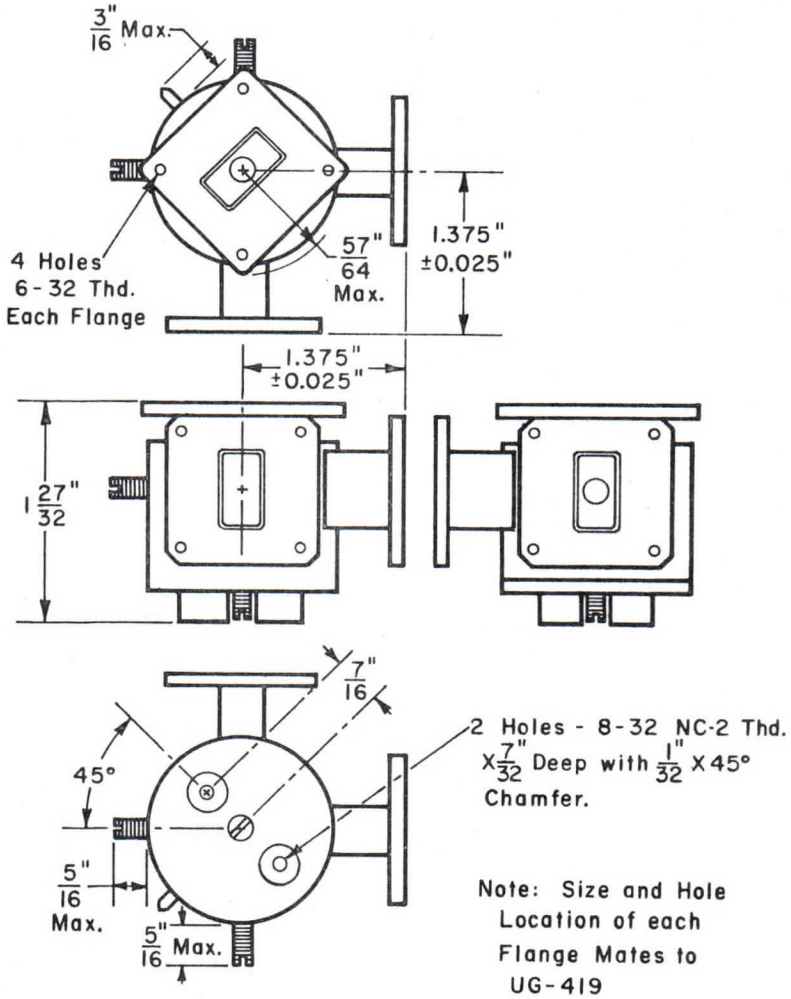

Note: Size and Hole Location of each Flange Mates to UG-419

DUAL-MODE 35 Gc. DISCRIMINATOR CAVITY TYPE WX-5479

The WX-5479 is a fixed-tuned, dual-mode reference cavity for use as a discriminator. It is rugged, temperature compensated, frequency stabilizing device which has applications with parametric-amplifier pumps, beacon radars, navigation systems, and any system needing a stable frequency source. The WX-5479 is a transmission type cavity designed for operation at a fixed frequency of 35 Gc. It is hermetically sealed and by use of a choke type compensator element, excellent temperature compensation and long time frequency stability are achieved.

ELECTRICAL

Typical Operating Characteristics

Ambient Temperature Range	-55 to +100°C
Change in Resonant Frequency with Temperature Change of -55 to +100°C	± 2 Mc.
Loaded Q each Output	3000 Min.
Frequency at Crossover (Note 1)	35,000 ±10 mC.
Frequency Difference Between Outputs (Note 2)	8 Mc.Min., 12 mC.Max.
Frequency of left output shall be less than frequency of right output	See Figure 1
Insertion Loss from Input to each Output	13 Max. dB
Insertion Loss Difference between Outputs	1 Max. dB
Mode Crossover	3 dB Min.

MECHANICAL

Mounting	RG-96/U Waveguide with UG-599/U cover flanges
Mounting Position	Any
Net Weight	3.5 Ounces

NOTES

1. Center frequencies in K-band are available with a tolerance of ± 10 Mc. Dual mode cavities in other bands are under development and requests are invited.
2. Various discriminator curves are available by changing the frequency difference between outputs.

The WX-5479 is designed to provide a smooth, balanced discriminator curve when terminated with matched detectors. Figure 1 is a representation of the cavity at 35,000 Mc where the frequency difference is 10 Mc maximum between opposite peaks.

Δ The WX- number identifies a specific laboratory design; the design and, consequently, the data and type number are subject to change. No obligations are assumed to manufacture this particular device in the future unless otherwise arranged. These drawings and specifications are the property of Westinghouse Electric Corporation, Electronic Tube Division, and shall not be reproduced or copied or used as the basis for the manufacture or sale of apparatus and/or devices without permission.

Westinghouse

DEVELOPMENTAL DEVICE
Tentative Data

A typical circuit employing the WX-5479 as a frequency sensing element is shown in Figure 2. In this circuit the WX-5479 provides a zero output signal at the desired operating frequency. Each output essentially looks like a separate cavity since, due to the degeneracy established, two cavities exist electrically in one physical cavity; therefore, excellent symmetry between outputs is obtained. If matched frequency vs. power detectors are used, the error signal slope will be equal on each side of zero resulting in simple uniform control of frequency.

The WX-5479 may be operated in any position and under extreme conditions of shock and vibration. The exterior of the cavity is nickel plated to withstand salt spray and extreme humidity. It may be operated at high altitude or in a pressurized waveguide system. Modifications for special applications or various frequencies can be provided on request.

TYPICAL OUTPUT RESPONSE

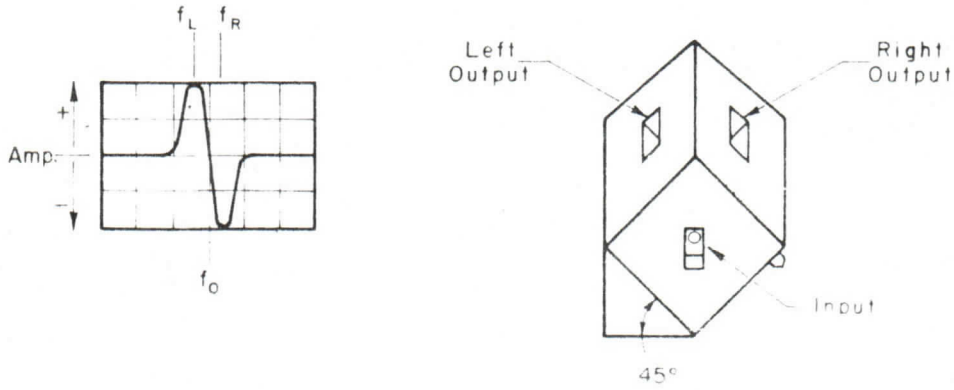

CE-A2044

FIGURE 1

TYPICAL TEST CIRCUIT *

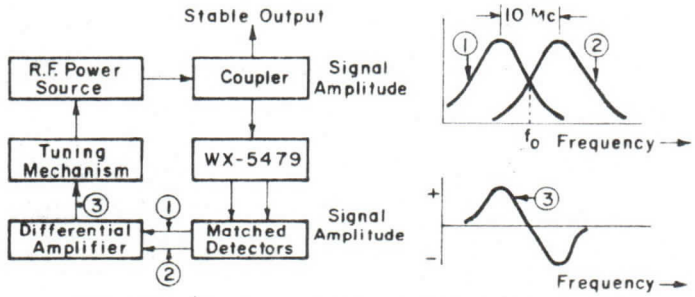

Waveshapes shown are for points indicated in the circuit.

CE-A2043

* PATENTED BY SPERRY RAND CORP., U.S. PATENT NO. 2502458

FIGURE 2

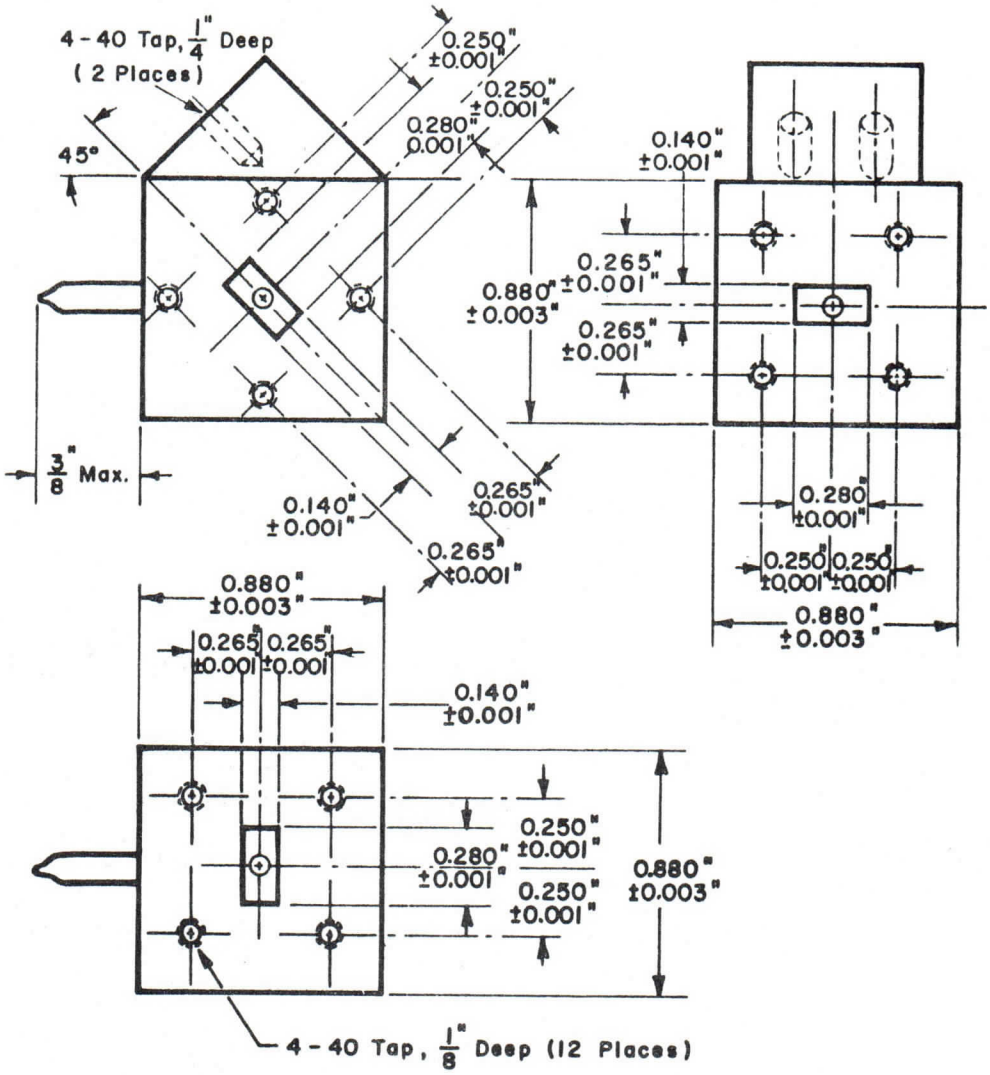
4 - 40 Tap, 1/4" Deep
(2 Places)
45°
0.250" ±0.001"
0.250" ±0.001"
0.280" 0.001"
0.140" ±0.001"
0.265" ±0.001"
0.880" ±0.003"
0.265" ±0.001"
3/8" Max.
0.140" ±0.001"
0.265" ±0.001"
0.265" ±0.001"
0.280" ±0.001"
0.250" ±0.001"
0.250" ±0.001"
0.880" ±0.003"
0.880" ±0.003"
0.265" ±0.001"
0.265" ±0.001"
0.140" ±0.001"
0.250" ±0.001"
0.280" ±0.001"
0.250" ±0.001"
0.880" ±0.003"
4 - 40 Tap, 1/8" Deep (12 Places)

VARACTOR MULTIPLIER TYPE WX-30000
16 to 22 Gc Output

The WX-30000 is a 2nd harmonic varactor multiplier assembly tunable from 16 to 22 Gc designed for service in parametric-amplifier pump, microwave spectroscopy local oscillator and research applications. The WX-30000 yields a K-band output of approximately 30 milliwatts with an X-band drive of 300 milliwatts.

MECHANICAL

Mounting Position	Any
Connectors:	
X-Band Input	UG-39/U
K-Band Output	WR-51
Diode Bias	UG-625B/U
Size	2 3/4" x 3" x 5"

ELECTRICAL

Input:	
Frequency Range	8 to 11 Gc.
Power (Max.)	300 mW.
Diode Bias:	
Voltage	0 to 30 Volts
Current	0 to 25 mA.
Output:	
Frequency Range	16 to 22 Gc.
Power	Approx. 30 mW.

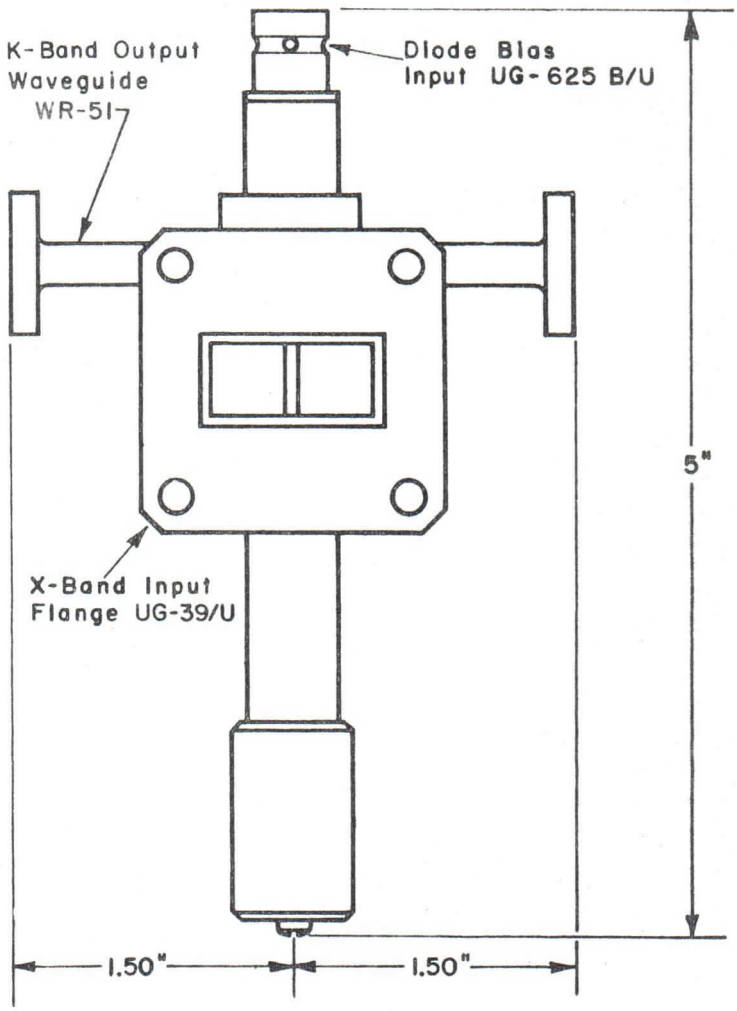

ACTUAL SIZE

Former WD-351

Δ The WX- number identifies a specific laboratory design; the design and, consequently, the data and type number are subject to change. No obligations are assumed to manufacture this particular device in the future unless otherwise arranged. These drawings and specifications are the property of Westinghouse Electric Corporation, Electronic Tube Division, and shall not be reproduced or copied or used as the basis for the manufacture or sale of apparatus and/or devices without permission.

VARACTOR MULTIPLIER TYPE WX-30001
24 to 26 Gc. Output

The WX-30001 is a 3rd harmonic varactor multiplier assembly tunable from 24 to 26 Gc designed for service in parametric-amplifier pump, microwave spectroscopy, local oscillator and research applications. The WX-30001 yields a K-band output of approximately 3 milliwatts with an X-band drive of 300 milliwatts.

MECHANICAL

Mounting Position	Any
Connectors:	
X-Band Input	UG-39/U
K-Band Output	WR-42
Diode Bias	UG-625B/U
Size	2 3/4" x 3" x 5"

ELECTRICAL

Input:	
Frequency Range	8 to 8.67 Gc.
Power (Max.)	300 mW.
Diode Bias:	
Voltage	0 to 30 Volts
Current	0 to 25 mA.
Output:	
Frequency Range	24 to 26 Gc.
Power	Approx. 3 mW.

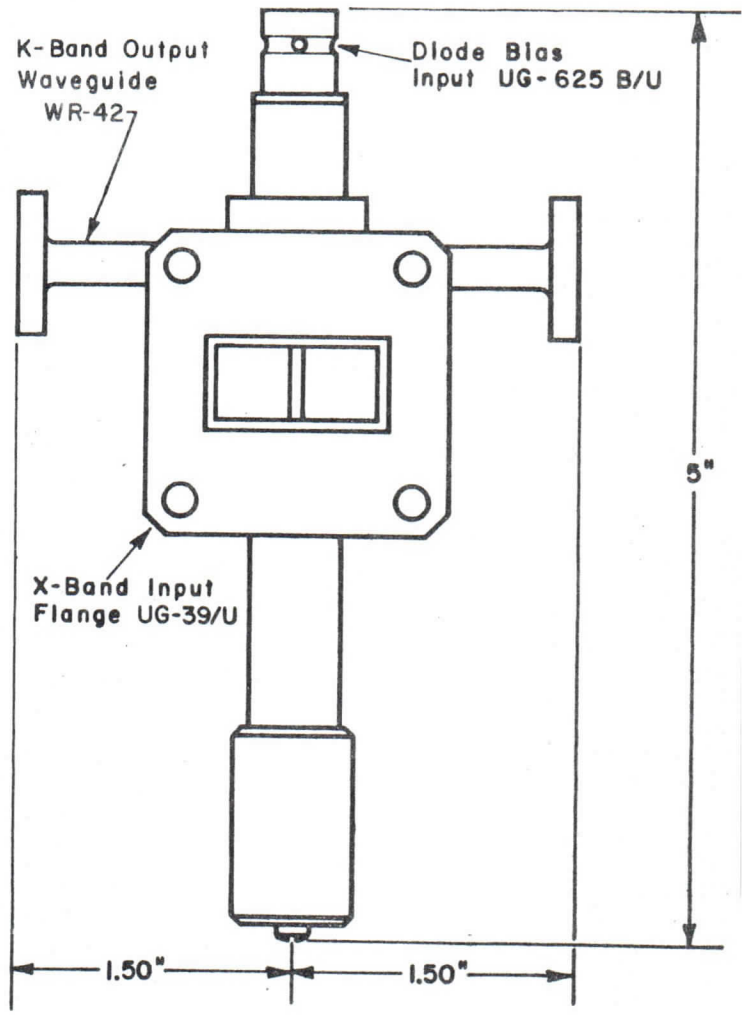

ACTUAL SIZE

Former WD-342

Δ The WX- number identifies a specific laboratory design; the design and, consequently, the data and type number are subject to change. No obligations are assumed to manufacture this particular device in the future unless otherwise arranged. These drawings and specifications are the property of Westinghouse Electric Corporation, Electronic Tube Division, and shall not be reproduced or copied or used as the basis for the manufacture or sale of apparatus and/or devices without permission.

VARACTOR MULTIPLIER TYPE WX-30002
32 to 38 Gc. Output

The WX-30002 is a 4th harmonic varactor multiplier assembly tunable from 32 to 38 Gc. designed for service in parametric-amplifier pump, microwave spectroscopy, local oscillator and research applications. The WX-30002 yields a Ka-band output of 0.3 to 1.0 milliwatt with an X-band drive of 300 milliwatts.

MECHANICAL

Mounting Position	Any
Connectors:	
X-Band Input	UG-39/U
Ka-Band Output	WR-28
Diode Bias	UG-625B/U
Size	2 3/4" x 3" x 5"

ELECTRICAL

Input:	
Frequency Range	8 to 9.5 Gc.
Power (max.)	300 mW.
Diode Bias:	
Voltage	0 to 30 Volts
Current	0 to 25 mA.
Output:	
Frequency Range	32 to 38 Gc.
Power	Approx. 0.5 mW.

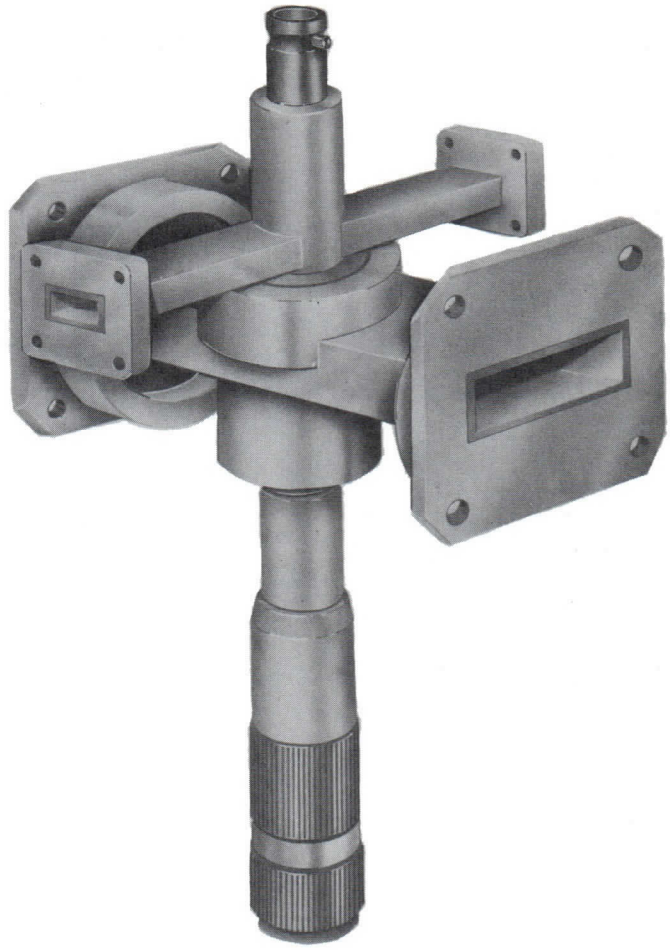

ACTUAL SIZE

Former WD-328

Δ The WX- number identifies a specific laboratory design; the design and, consequently, the data and type number are subject to change. No obligations are assumed to manufacture this particular device in the future unless otherwise arranged. These drawings and specifications are the property of Westinghouse Electric Corporation, Electronic Tube Division, and shall not be reproduced or copied or used as the basis for the manufacture or sale of apparatus and/or devices without permission.

Westinghouse

DEVELOPMENTAL DEVICE
Tentative Data

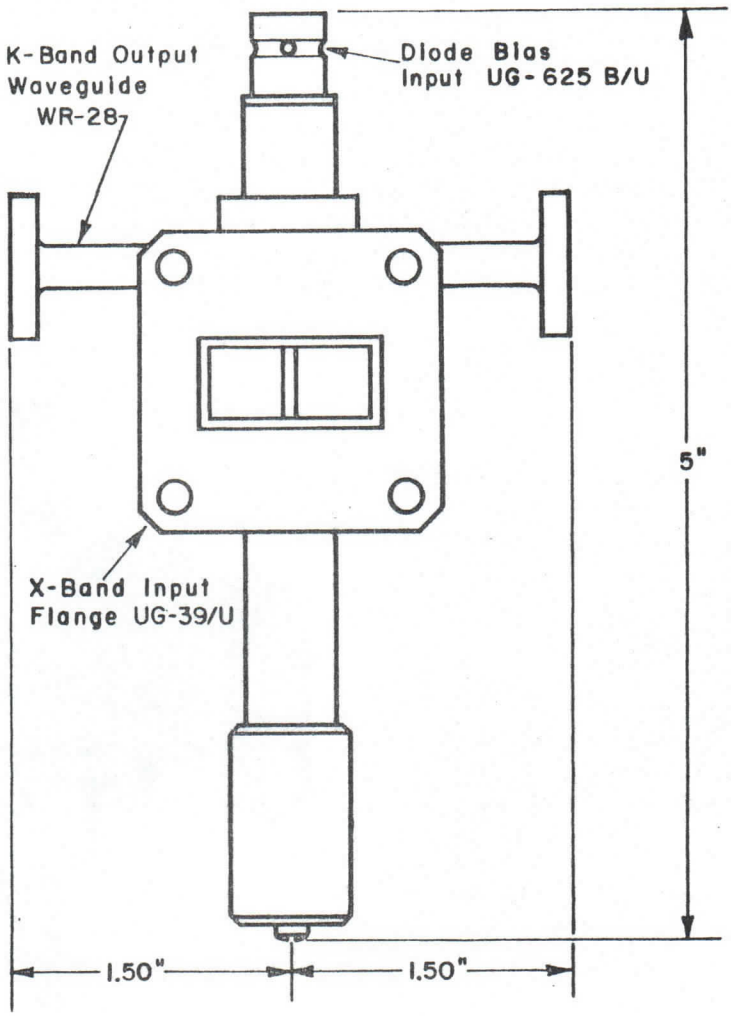

MICROWAVE SWITCHING DEVICES

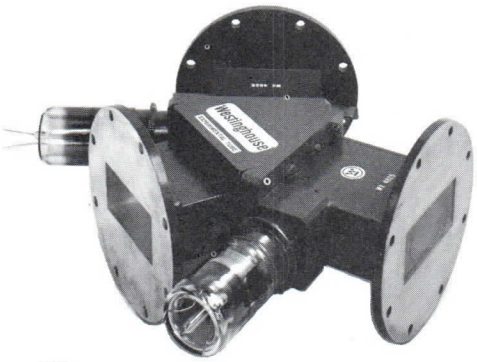

GAS



SEMICONDUCTOR

WHATEVER YOUR MICROWAVE SWITCHING PROBLEMS – – – CONSULT WESTINGHOUSE FOR A SOLUTION

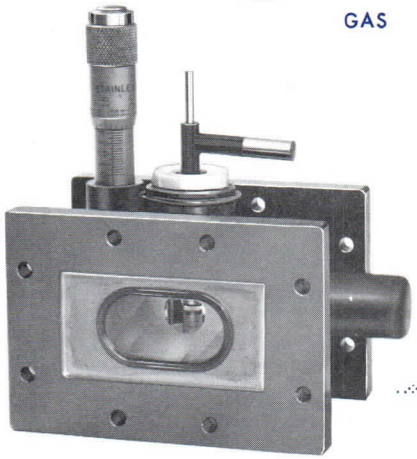

HIGH VACUUM

WESTINGHOUSE ELECTRIC CORPORATION
Electronic Tube Division
Elmira, New York

LATCHING FERRITE

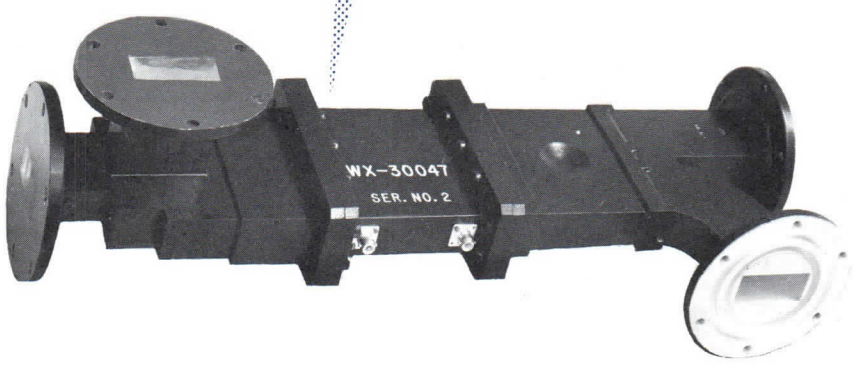

Modern microwave systems have created requirements for switches, duplexers, attenuators and phase shifters with stringent performance specifications. Many of these devices must be custom designed to satisfy specific situations. Westinghouse has established a broad capability in various device technologies which permit the choice of an optimum design approach based upon careful consideration of the many parameters which define a particular advanced requirement. Examples of the different choices of microwave switching devices are described in the following pages.

Consult with Westinghouse for solution of your special switching problem.

January, 1964

I: GAS DISCHARGE DEVICES

The earliest forms of microwave switches and duplexers were based on the ability of an ionized gas to produce a high conductivity at microwave frequencies. Westinghouse is now extending the familiar TR tube technology into a new class of advanced high power microwave gas discharge devices. Various families of new types of devices are discussed below:

RECEIVER PROTECTORS

These devices are designed to protect various forms of receiver inputs such as mixer crystals, parametric amplifiers and traveling-wave tubes from high incident power. When combined with a ferrite circulator or gas discharge pre-TR they complete the duplexer circuit. Since the power incident upon the receiver protector is not useful, these devices may have a high arc loss (dissipation of incident power) without impairing their function. The devices listed below are typical of what has been accomplished.

Type	Frequency-gc	Peak Power KW	Duty	PRF KC	Recovery Time us Max.	Flat Leakage Watts	Insertion Loss – db Max.	Comments
WX-4404	2.32 – 2.68	250	0.004	0.4	30	100	0.2	Ultra-low loss protector for low noise TWT.
WX-4105	5.10 – 5.65	1.0	0.1	80	0.2	50	0.2	Usually followed by additional protector unit.
WX-4405	5.28 – 5.56	1.0	0.1	80	0.2	0.07	0.75	Crystal protector.
WX-4239	5.55 – 5.90	1.0	0.1	70	0.2	0.6	0.3	Low loss, fast recovery protector for TWT or diode switch.
WX-3890	8.5 – 9.6	80	0.001	1.0	0.3	0.09	0.8	Fast recovery – high power
WX-4858	8.8 – 9.4	1.0	0.1	100	0.2	0.09	0.6	Fast recovery – low leakage
WX-4020	9.2 – 10.0	0.4	0.265	200	0.15	1.0	0.3	Fast recovery – high duty
WX-4021	9.2 – 9.5	0.5	0.3	200	0.2	0.05	0.5	Fast recovery – high duty
WX-4356	10.0 – 10.3	0.2	0.1	80	0.2	0.06	0.6	Fast recovery – low leakage



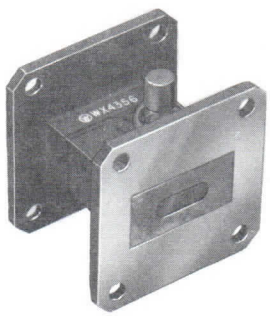

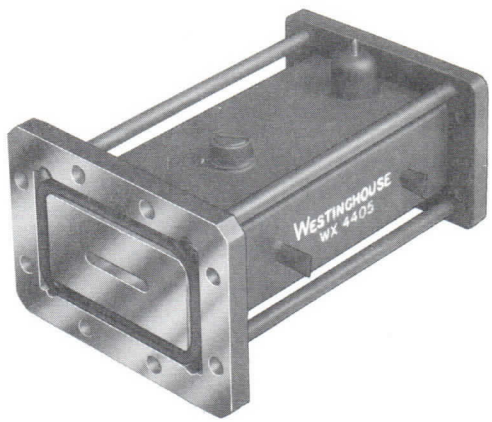

I: GAS DISCHARGE DEVICES

VIDEO CONTROLLED TUBES

This new family of tubes has the capability of controlling the passage of a high power transmitted pulse of rf energy through the circuit. In the usual duplexing tube, the incident rf energy is responsible for creating the discharge which results in the establishment of a reflecting short. With these new devices the discharge is initiated by an external video pulse applied to a suitable electrode. The Thyratron Switch and the Triggered Gap are typical of video controlled class of switching devices.

VIDEO CONTROLLED TUBES — THYRATRON SWITCH

This is a grid controlled, hot-cathode arc-discharge device which does not depend upon the rf pulse to create a discharge. The short circuit can be initiated prior to or during the rf pulse. Characteristically it has a bandwidth approaching that of waveguide, extremely low loss, high isolation and rapid switching. It may be designed as a pre-pulsed TR tube with no spike leakage, a balanced duplexer with exceptional isolation, a single pole double throw switch and a pulse shaper at all frequencies from 1 to 100 gc. Pre-pulsed duplexers and receiver protectors can be provided with lower arc loss and higher isolation than can be achieved in multipole switch configurations.

Type	Frequency-gc	Power	Duty	Transmit Loss *	Insertion Loss	Isolation
WX-4825 SPDT Switch	2.85 – 3.5 gc	100 KW	0.002	0.4 db max.	–	40 db
WX-4828 SPST Switch	2.85 – 3.5 gc	100 KW	0.002	–	0.1 db	40 db min.

* Includes 0.3 db arc loss of fired tube and 0.1 db insertion loss of unfired tube.

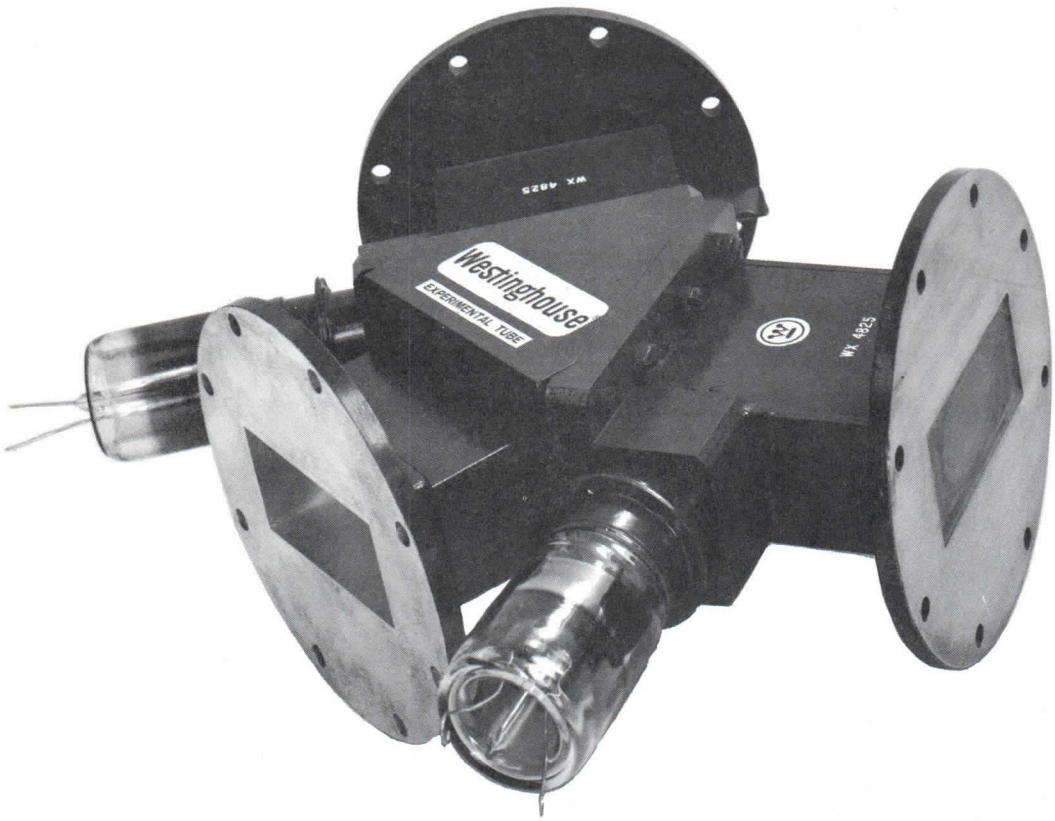

I: GAS DISCHARGE DEVICES

VIDEO CONTROLLED TUBES — TRIGGERED GAP

This is a cold-cathode arc-discharge tube that uses an external pulse to trigger a high power rf discharge. It can be used to reduce the fall time of a high power pulse or as a fast switch in a high power phase shifter circuit. Characteristically it is narrow band (1 to 2%) and exhibits rapid switching (15 nanoseconds) at medium power (50 to 250 KW).

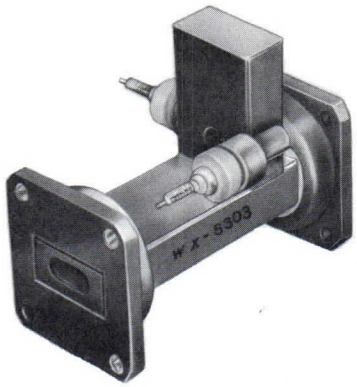

WX-5303 — Tail Bite Switch — X-Band
Power: 80 KW
Duty: 0.0005
PRF: 1 KC
Insertion Loss: 0.4 db
Isolation: 20 db
Switching Speed: 15 nanoseconds
Trigger Voltage: 2 KV

II: HIGH VACUUM DEVICES

High power switching can be achieved by the use of the multipactor effect in a reentrant resonant cavity. A resonant buildup of an electron cloud due to rf initiated secondary emission between opposing surfaces serves to detune the cavity and provide a switching action. When rf is removed recovery time is in the order of one rf cycle. The application of a dc bias to the gap destroys the conditions required for multipactor buildup and can, therefore, be used for electrostatic control. This class of device is characterized by narrow bandwidth (1 to 2 per cent) and faster recovery at high power than can be achieved by any other known cold cathode technique. Broader band devices can be developed, but these are absorbtive rather than reflective under high power conditions.

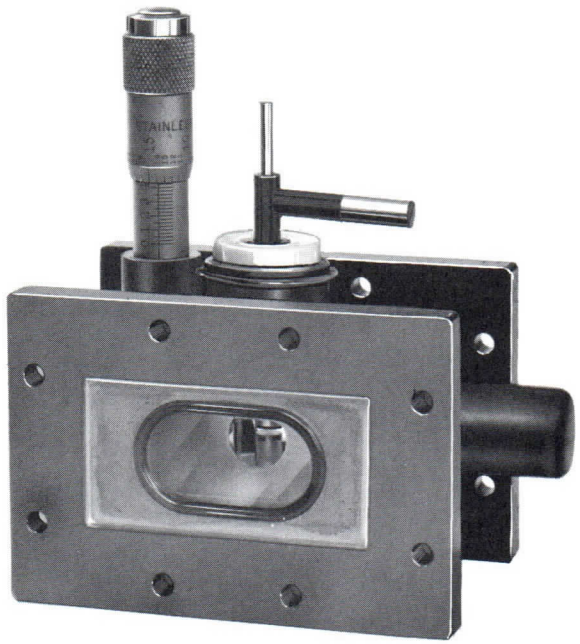

	Power	Duty	Insertion Loss	Recovery Time	Isolation
WX-4238 C-Band	1 MW	0.001	0.9	0.2 nanosecond	25 db

III: LATCHING FERRITE DEVICES

This is a new class of digital switching devices that uses the same ferrite material to provide a dc magnetic field and act as the microwave element. A current spike in the order of one microsecond or less through a low inductance coil magnetizes the ferrite to a stable or "latched" state. A reverse current spike latches the ferrite in its other stable state, providing a two position digital element. By the use of two or more elements various forms of digital phase shifters, adjustable power divider, multipole switch and attenuator can be developed. They offer fast switching with low loss at moderate peak power levels (in the order of 10 kilowatts) in a simple lightweight device. The devices listed below represent the start of a broad family that can be custom designed.

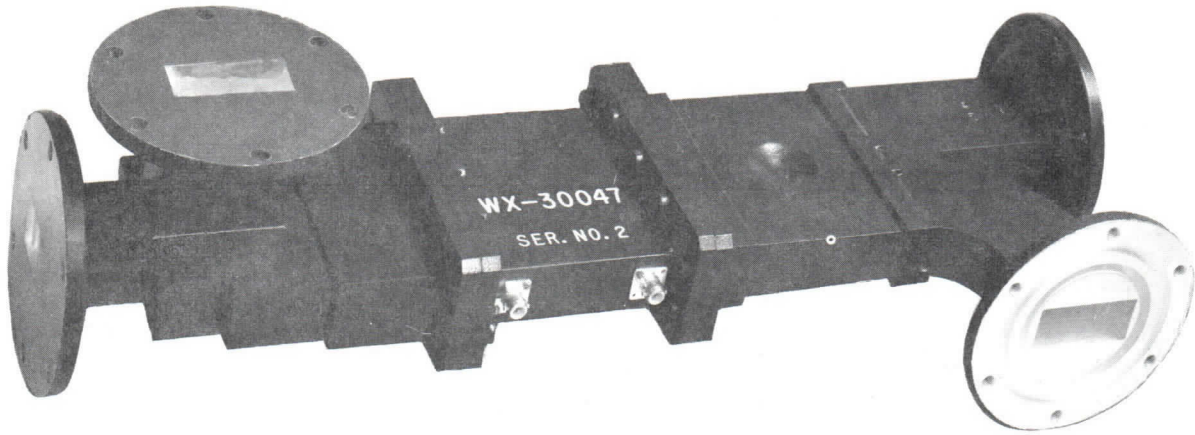

WX-30047 – C-Band Single Pole Double Throw Switch
Bandwidth: 10 per cent
Peak Power: 2 kilowatts
Duty: 0.01 (nominal)
Insertion Loss: 0.5 db max.
Isolation: 20 db min.
Switching Peak Current: 20 amperes – min.
Switching Energy: 800 microjoules

WX-4087 – X-Band 180 Degree Phase Shifter
Bandwidth: 10 per cent
Insertion Loss: 0.5 db max.
VSWR: 1.5 max.
Peak Power: 1 KW – max.

WX-4339 – X-Band 5 Bit – 360 Degree – Phase Shifter
Phase Bits: 11.25, 22.5, 45, 90, 180 degrees
Total Phase Shift: 360 degrees in 32 steps
Bandwidth: 10 per cent
Insertion Loss: 0.8 db max.
VSWR: 1.7 max.
Peak Power: 1 KW max.

IV: SEMICONDUCTOR DEVICES

The use of semiconductor diodes in microwave circuits allows for the control of low and moderate power microwave energy with low power control circuits. Switches, phase shifters and limiters can be developed which occupy little volume and are extremely rugged and reliable when applied properly. They are subject to burnout due to overloads in the microwave or control circuits, but can be adequately protected if full consideration is given to possible environments when a device is specified. To enable us to guarantee meeting performance requirements under environmental conditions over long periods of time, diodes are permanently encapsulated into the microwave circuit and no adjustment by the user is necessary. A series of coaxial single pole single throw switches are specified below. Multipole and waveguide versions of these units can be provided to meet requirements.

Type	Frequency-gc	Insertion Loss db max.	db Isolation min.	Switch Speed Nanosec.	Power Watt	Control Power V (Volts)	Control Power I (ma)
WX-5080	5.4 – 5.9	3.0	80	40	1.0 (CW)	8.0	25
WX-5329	5.4 – 5.9	1.0	30	1.0	0.1	1.2	25
WX-5385	1.7 – 5.5	2.5	23	10.0	1.0 (CW)	2.0	25
WX-5388	1.25 – 1.5	1.6	50	10.0	1.0 (CW)	13.0	40



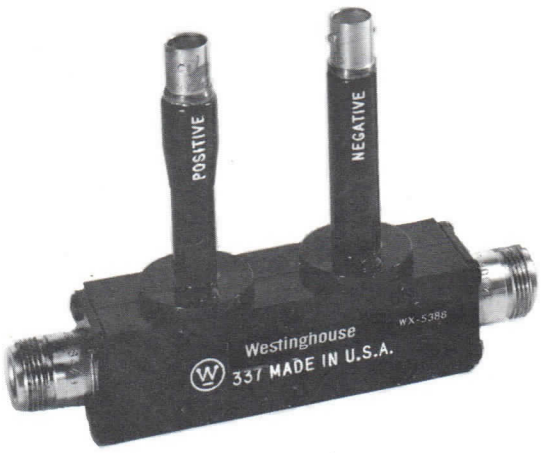





ET-1434-0164-7500

Series Spark Gaps
Types 1B41, 1B45, 1B49

Types 1B41, 1B45, 1B49 are gas-filled, cold-cathode diodes. Two or more tubes are used in series as the switching device in line-type pulsers.

GENERAL DATA

Electrical:

Frequency Range	120 to 2000 cps
Interelectrode Capacitance	7 uuf
Instantaneous Breakdown Voltage (Nominal):	
1B41	9.5 kv
1B45	14 kv
1B49	12 kv

Mechanical:

Ionized Medium	Gas
Number of Electrodes	Two
Mounting Position	Cathode End Up; Within 60° of Vertical

MAXIMUM RATINGS

Peak Current	450 max.	Amperes
Average Power Dissipation	25 max.	Watts
Average Current	210 max.	Ma.
Frequency	2000 max.	cps
Ambient Temperature	–50 to 100 max.	°C
Duty Cycle	0.001 max.	

YOU CAN BE SURE ... IF IT'S Westinghouse

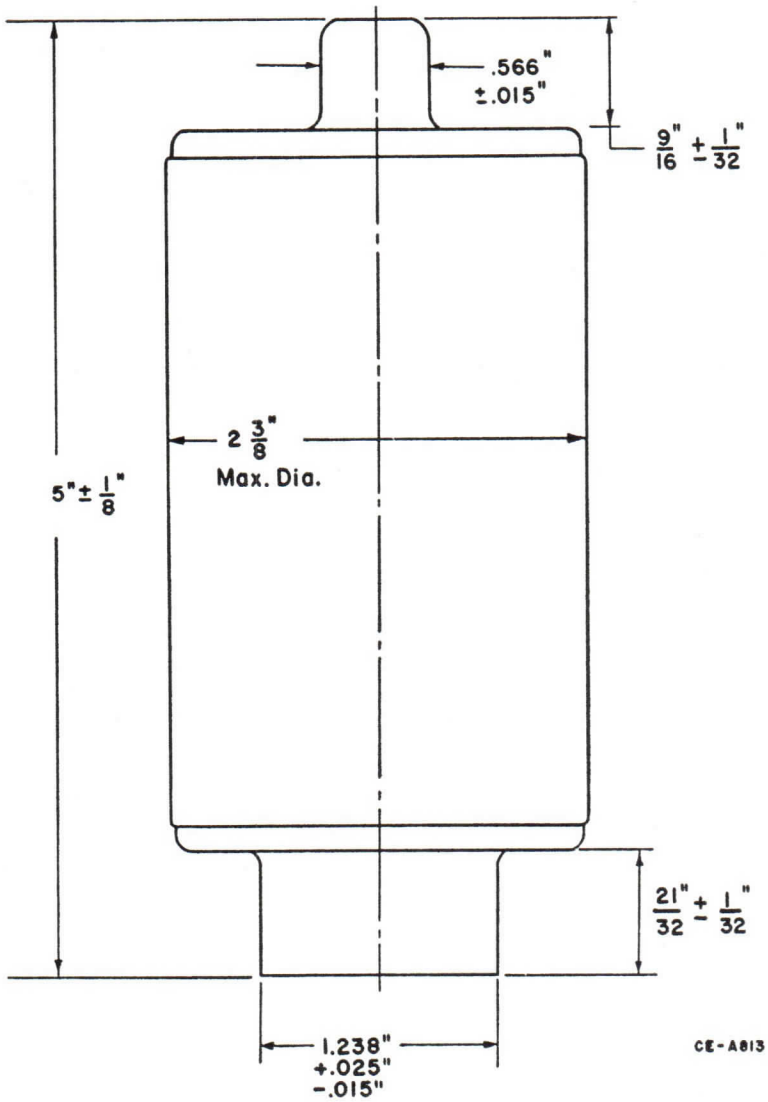

MICROWAVE SWITCH TUBE TYPE WX-4239

5550 to 5900 Mc.

The WX-4239 is a low insertion loss TWT protector or a pre-TR tube intended for operation where arc loss is not a critical system parameter. The tube opertes in the frequency range of 5550 to 5900 mc and has a 0.2 microsecond recovery time with a 600 milliwatt flat leakage power at 1 kilowatt peak incident rf power at a 0.1 duty factor.

The WX-4239 is designed for service as a low insertion loss microwave switch tube for pulse doppler type radar equipments where fast recovery time is required.

CHARACTERISTICS

	Symbol	Units	Min.	Max.	Nominal
Frequency.	F	mc	5550	5900	--
Power Incident. . .	P_i	kw	--	--	1.0
Duty Factor.	du		--	--	0.10
Recovery Time. . . .	t_r	µsec	--	0.2	--
Leakage Power. . . .	P_l	mw	--	600	--
Insertion Loss. . .	L_i	db	--	0.2	--
Life.		hr.	1500	--	--

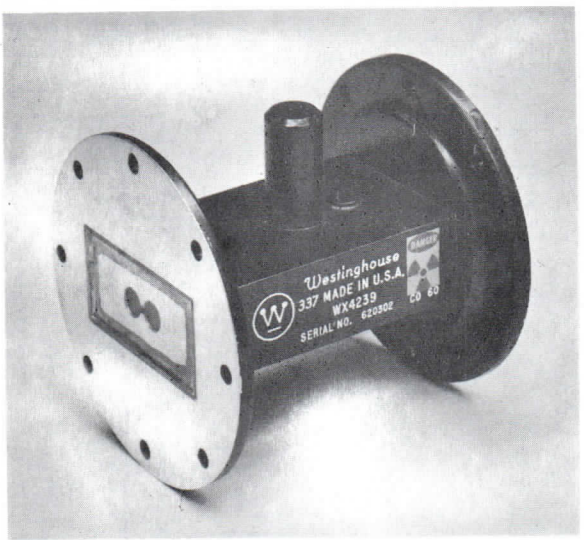

Δ The WX- number identifies a specific laboratory design; the design and, consequently, the data and type number are subject to change. No obligations are assumed to manufacture this particular device in the future unless otherwise arranged. These drawings and specifications are the property of Westinghouse Electric Corporation, Electronic Tube Division, and shall not be reproduced or copied or used as the basis for the manufacture or sale of apparatus and/or devices without permission.

WESTINGHOUSE ELECTRIC CORPORATION, ELECTRONIC TUBE DIVISION, ELMIRA, NEW YORK

Los Angeles 17, California
600 St. Paul Avenue
Phone HUntley 2-9660

San Lorenzo, California
2222 Grant Avenue
Phone EXbrook 2-5353

Elmira, New York
Box 284
Phone REgent 9-3611

Washington 6, D.C.
1625 K Street N.W.
Phone NAtional 8-8843

Chicago 9, Illinois
2211 W. Pershing Road
Phone WHitehall 4-3860

Boston, Massachusetts
10 High Street
Phone LIberty 2-0600

Detroit 32, Michigan
Box 502, 5757 Trumbull Ave.
Phone TRinity 2-7010

Bloomfield, New Jersey
MacArthur Avenue
Phone HUmbolt 4-3000

MECHANICAL

Mounting Position	Any
Support	Input and Output Flange
Flange	.149 A/U
Length	3.755 Inches
Weight	2.09 lb.

NOTES

1. Can be made lighter by changing flange material and geometry

2. Vibration tests have not been conducted on the tube, however, the following tests were made on a tube having the same mechanical design as the WX-4239 tube.

   5 to 20 cps at 0.10 in. DA (Double Amplitude)
   20 to 42 cps at 2g
   42 to 72 cps at 0.036 in DA
   72 to 500 cps at 10g

3. Temperature tests have not been made, however, the design should allow an operating environmental temperature range of -65 to +85°C.

4. External cooling is not necessary, however, forced air cooling directed behind the input flange would enhance life of the tube when the tube is operating in a high temperature environment.

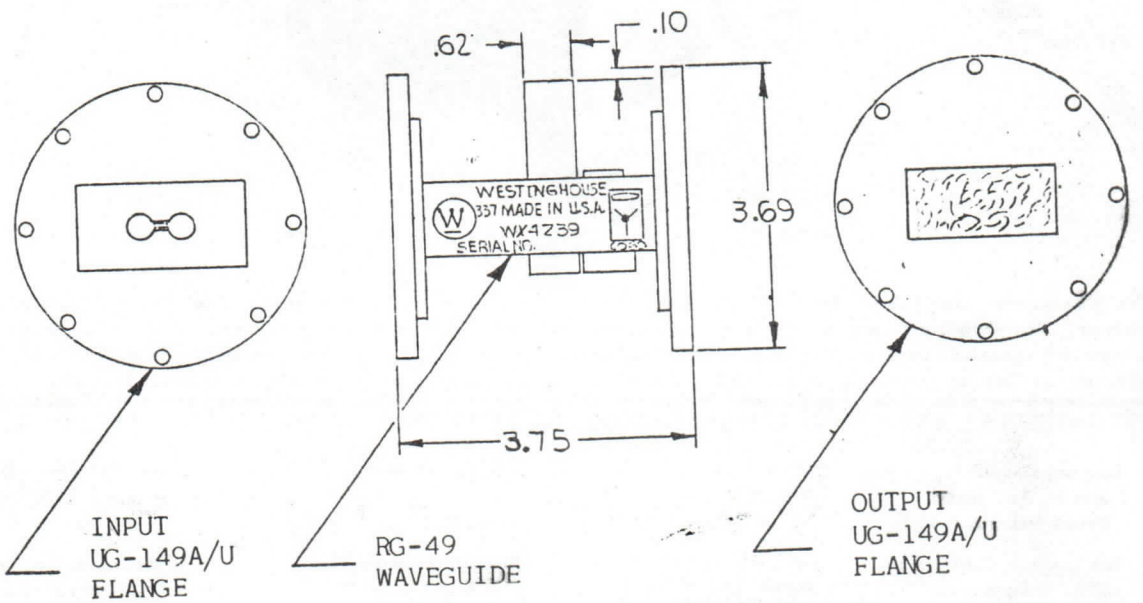

Westinghouse
DEVELOPMENTAL DEVICE
Tentative Data

WX- 4404
April 20, 1963
Page 1 of 2 pages

MICROWAVE SWITCH TUBE TYPE WX-4404
2320 to 2680 Mc.

The WX-4404 is a high-power, low-insertion-loss, S-band TR tube. Its function is to protect the traveling-wave tube in a radar receiver without degrading the the system noise figure. The WX-4404 does not employ a keep-alive and therefore can also serve as a Pre-TR tube with a low-power crystal protector. The tube has a maximum VSWR of 1.25:1 and a maximum insertion loss of 0.2 db over a bandwidth of 14.4%. The WX-4404 provides receiver protection at maximum power levels of 625 kilowatts peak.

MECHANICAL

Mounting Position (Note 1)	Any
Length	3.370"±0.030"
Support	Input and Output Flanges
Flanges	See Outline
Waveguide Size (Note 2)	1.849"x3.698"I.D.(Special S-Band)

ELECTRICAL

Frequency	2320 to 2680 Mc.
VSWR	1.25:1 max.
Insertion Loss	0.2 max. db
Firing Power	300 max. Watts
Peak Power	625 max. Kilowatts
Leakage:	
Spike	300 max. Peak Watts
Flat	200 max. Peak Watts
Recovery Time	30 max. Microseconds
Duty	0.002 max.

NOTES

1. The WX-4404 is capable of operation in ambient tenperatures from -54°C to +50°C. The tube has a protective finish to withstand salt spray, sand, dust and insects. The WX-4404 will perform satisfactorily during vibration detailed in MIL-T-4807A, Method 1, except all values reduced by 50% and shock detailed in MIL-T-4807A, Method 3.

2. The WX-4404 may be operated into waveguide pressurized to 10 pounds per square inch maximum.

Δ The WX- number identifies a specific laboratory design; the design and, consequently, the data and type number are subject to change. No obligations are assumed to manufacture this particular device in the future unless otherwise arranged. These drawings and specifications are the property of Westinghouse Electric Corporation, Electronic Tube Division, and shall not be reproduced or copied or used as the basis for the manufacture or sale of apparatus and/or devices without permission.

OUTLINE DRAWING

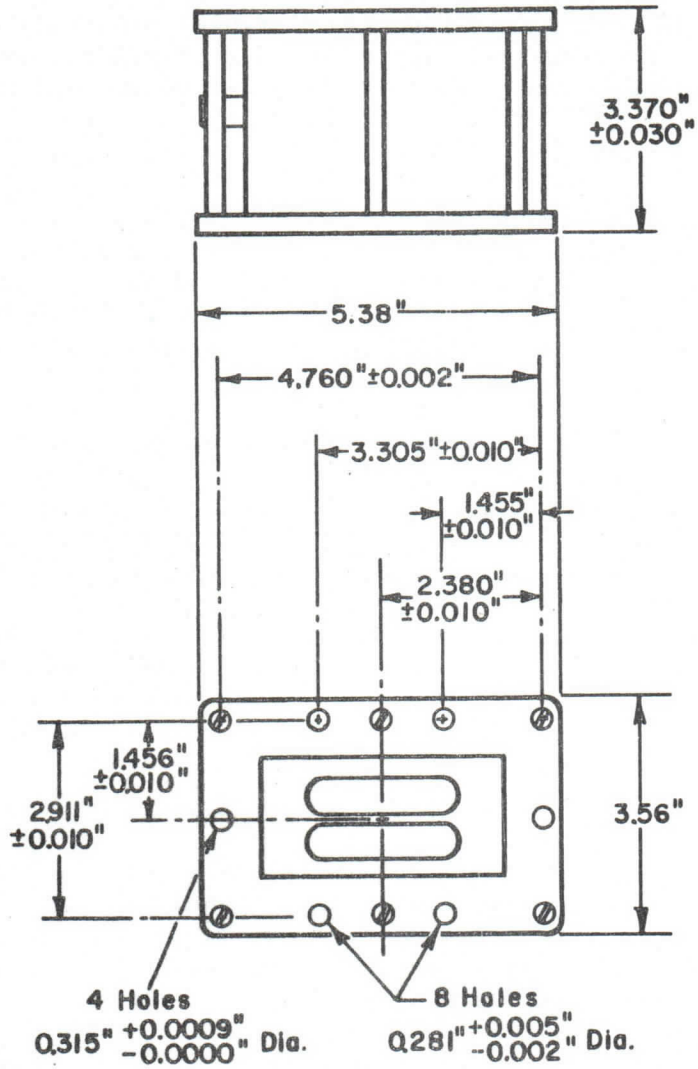

MICROWAVE SWITCH TUBE TYPE WX-4405

5280 to 5560 Mc.

The WX-4405 is a microwave crystal protector operating in the frequency range of 5280 to 5560 mc at 1 KW peak incident rf power at a 0.1 duty factor with a recovery time to the 3 db point of less than 0.2 microseconds.

Application is as a fast recovery crystal protector for operation in the receive arm of a ferrite circulator in a pulse doppler type radar where low arc loss is not a stringent requirement.

Characteristics

	Symbol	Minimum	Typical	Maximum	
Frequency.	F	5280	- -	5560	Mc
Power Incident . . .	P_i	- -	- -	1.0	Kw
Duty Factor	du	- -	0.10		
Recovery Time (3 db Point) . . .	t_r	- -	- -	0.2	μsecond
Flat Leakage	P_e	- -	- -	70	mW
Spike Leakage. . . .	W_s	- -	- -	0.20	Ergs
Insertion Loss . . .	L_i	- -	- -	0.75	dB

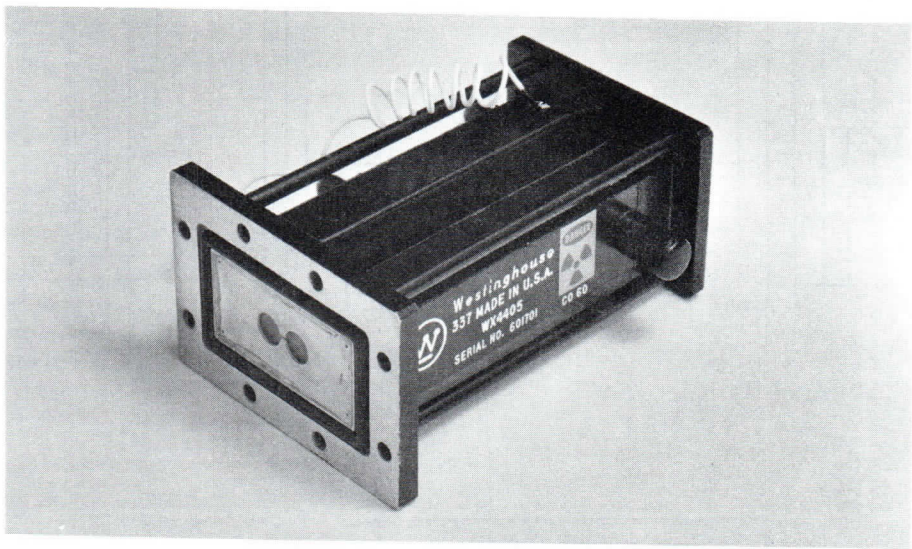

Δ The WX- number identifies a specific laboratory design; the design and, consequently, the data and type number are subject to change. No obligations are assumed to manufacture this particular device in the future unless otherwise arranged. These drawings and specifications are the property of Westinghouse Electric Corporation, Electronic Tube Division, and shall not be reproduced or copied or used as the basis for the manufacture or sale of apparatus and/or devices without permission.

Westinghouse TENTATIVE DATA

Characteristics Continued

	Symbol	Minimum	Typical	Maximum	
Spurious Noise Oscillation . . .		- -	- -	50	dB
Open Circuit Ignitor Voltage. .	E_{bb}	-900	-950	-1000	Volts d-c
Ignitor Circuit Internal Resistance. . . .	R	0.8	1.0	1.2	Megohms
Life.		500	- -	- -	Hours

Mechanical

Mounting Position. . . . . Any
Support . . . . . .Input and output flanges and supporting posts between flanges
Flanges . . . . . Any type to mate with C-band waveguide.
Length . . . . . 4.484" ±0.005" between flange surfaces.
Weight . . . . . 1.3 Pounds

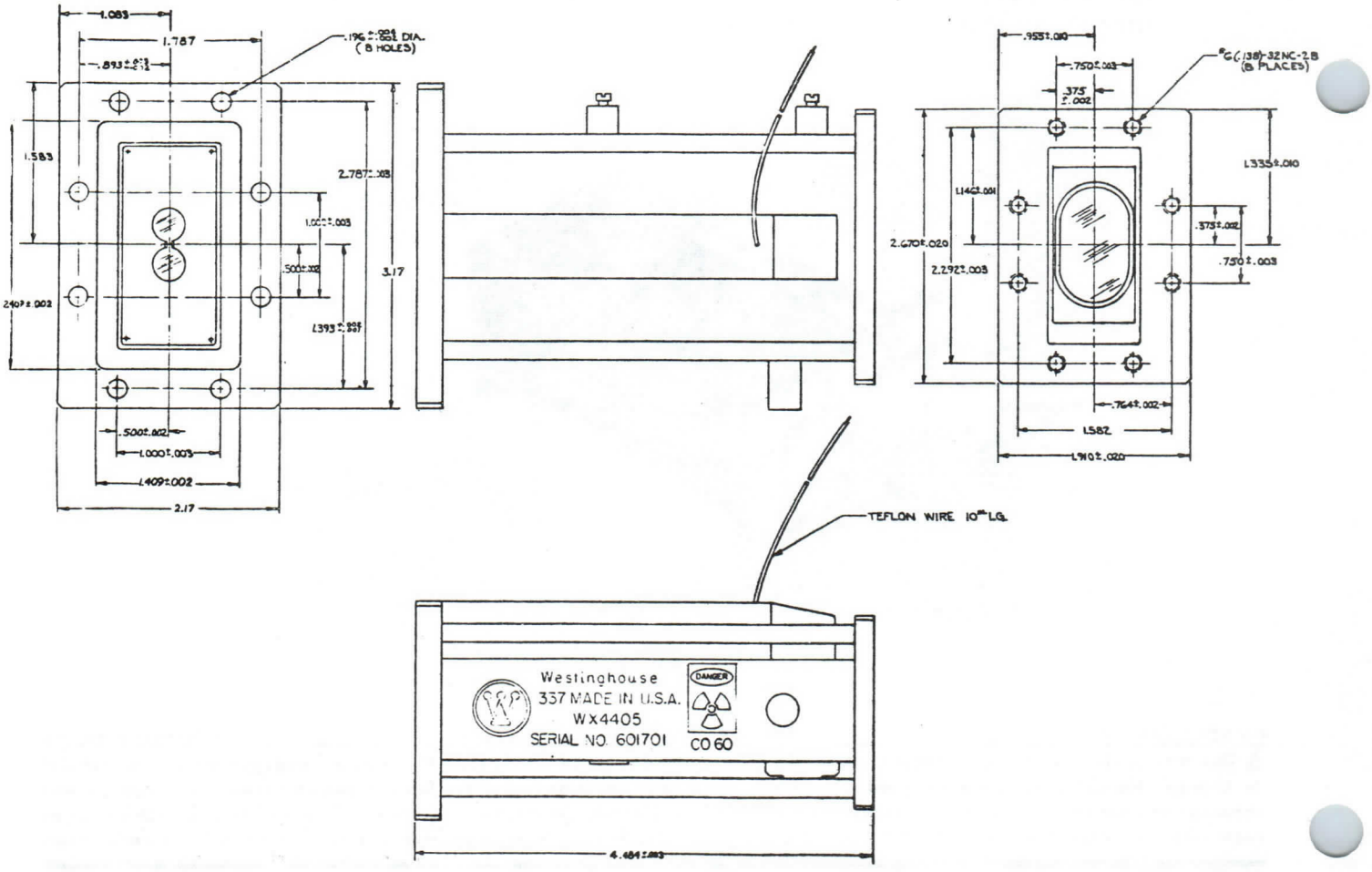

X-Band Thyratron Waveguide Switch
WX-4829

The Thyratron Waveguide Switch (TWS) is an externally-controlled gas-type switch for use in high-speed high-power microwave applications where extremely low loss and wide bandwidth are required. The device is not rf-activated, therefore, certain potentials are required to actuate it. These power supply requirements are moderate. The electrical characteristics are relatively insensitive to ambient temperature variations. It is mechanically rugged, small in size and lightweight.

An internal reservoir is provided as a gas source and pressure stabilizer. The reservoir coupled with adequate cathode baffling provides stable operating characteristics and long life.

The WX-4829 exhibits:

a) low insertion loss

b) high isolation

c) fast turn-on time

d) high peak power switching capability

e) full waveguide bandwidth

f) electrical characteristics insensitive to temperature.

PRINTED IN U.S.A. SUPERSEDES WX-4829 – 7/13/65 MICROWAVE SWITCH

Δ The WX- number identifies a specific laboratory design; the design and, consequently, the data and type number are subject to change. No obligations are assumed to manufacture this particular device in the future unless otherwise arranged. These drawings and specifications are the property of Westinghouse Electric Corporation, Electronic Tube Division, and shall not be reproduced or copied or used as the basis for the manufacture or sale of apparatus and/or devices without permission.

Westinghouse TENTATIVE DATA

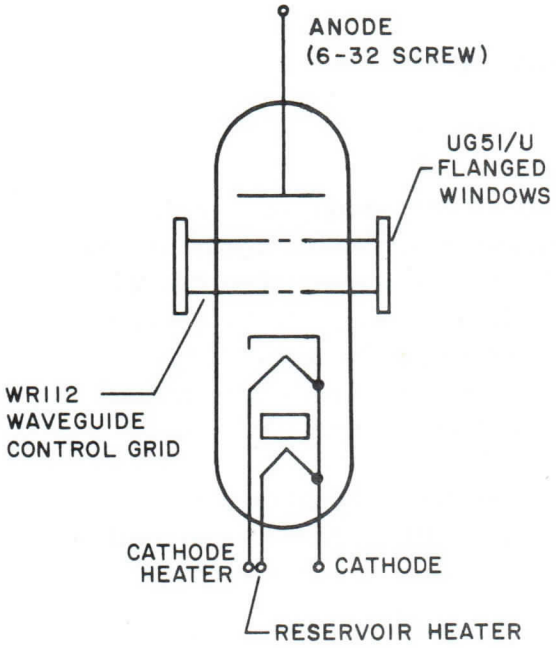

TWS SCHEMATIC

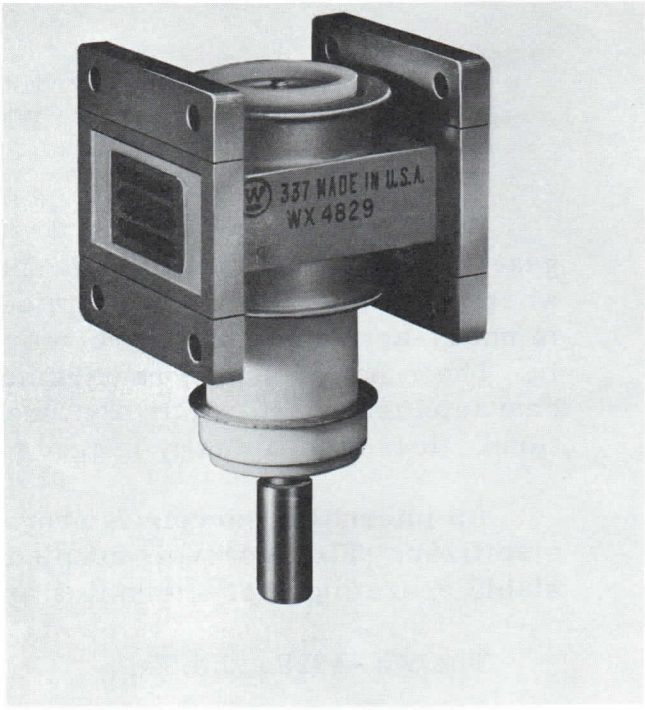

S3284A-VA-1

Microwave Characteristics

Frequency:	7-10.5 ghz
Power (Note 1):	200 kw peak
Turn-On Time:	30 nanoseconds
Turn-Off Time:	3 microseconds
Duty Cycle:	0.008
Pulsewidth (Note 1):	1.0 microsecond
PRR (Note 2):	Up to 8000 PPS
Operating Temperature:	-55°C to +95°C
Isolation (Note 3):	60 db
Arc Loss:	0.4 db
Insertion Loss (7-10.5 gcs):	0.20 db
RF Jitter:	< 3 nanoseconds

DC Characteristics

Anode (Note 4)	
Potential:	500 volts dc
Peak Current (Note 4):	5 amperes
Average Current (Note 5):	0.8 milliamperes
Duty Factor (Note 5):	0.0016
Rate-of-Rise:	2000 amperes/microsecond
Trigger	
Voltage:	150 volts
Waveform:	Rectangular, trapezoidal or half sinusoid
Source Impedance:	2000 ohms
Duration (50%):	1.5 microseconds
Jitter:	$<$3 nanoseconds
Cathode Heater:	6.3 V @ 2 amperes
Reservoir Heater (Note 6):	6.3 V @ 0.8 amperes

Mechanical Characteristics, General

Mounting Position:	Any
Base:	Circular, 3 flying leads
Dimensions (Nominal):	2" x 2" x 3"
Waveguide:	WR-112
Device Temperature Range:	250°C max.
Warmup Time:	3 minutes
Weight:	10 ounces
Cooling:	Not required

NOTES

Note 1 - The peak power switching capacity depends on pulsewidth. At shorter pulsewidths the switching power increases to megawatts, whereas at long pulsewidths the switching power decreases to 100 kw.

Note 2 - The TWS can operate over wide ranges of PRR, but the selection of a suitable modulator circuit depends on PRR. At low PRR a soft-tube type of modulator circuit is advantageous.

Note 3 - This depends on the combination of rf power level and arc current, but is never less than 40 db.

Note 4 - The peak arc current is controlled by the anode potential and series load resistance. For high isolation applications, arc current is large so that anode potential may exceed this value.

Switching time is also dependent on anode potential. In high-speed applications, it is advantageous to increase anode potential. In this case, arc current may be limited through circuit design, if required.

Note 5 - The dc duty factor is less than the rf duty factor since it is not required to maintain the arc current for the entire duration of the rf pulse.

Note 6 - In many applications it is desirable to design the circuit to allow manual adjustment of reservoir heater power in order to optimize pressure.

High Power Microwave Switching Applications

Interpulse Switching (transfer of entire rf pulse)
Intrapulse Switching (time division of an rf pulse)
Phase Shifting Whole Pulses
Phase Shift coding of n Bits/Pulse
Pulse Clipping (enhancing fall time of a pulse)
Pulse Shaping (decreasing both rise and fall time of rf pulses)
Duplexing (eliminates spike problem in high power radar systems)
Crystal Protector (high switching ratio over full waveguide band, no spike leakage)
Discharging Resonator Rings (fast turn-on time, wide bandwidth and high power capacity)

HIGH ISOLATION
SOLID-STATE MICROWAVE SWITCH TYPE WX-5080
5.4 to 5.9 Gc.

The WX-5080 is a high-isolation, C-band, coaxial, single-pole single-throw microwave switch. No d-c bias is required to maintain 80 dB isolation from 5.4 to 5.9 gigacycles and the device is compact, lightweight and rugged.

MECHANICAL

Mounting Position	Any
Dimension	1" x 1" x 5"
Temperature	-55 to +80°C
R. F. Connector (Note 1)	TNC Jack
Switching Connector	BNC Jack

ELECTRICAL

Frequency	5.4 to 5.9 Gc.
Insertion Loss	3 max dB
Switching Power:	
Voltage	8 max Volts
Current	25 mA.
R. F. Power	1 (cw) Watt
Isolation	80 min dB
Switching Speed	40 nSec.
Video Impedance	50 Ohms
R. F. Impedance	50 Ohms

NOTE

1. The switch may be supplied, under other numbers, with different connectors.



ACTUAL
SIZE

Δ The WX- number identifies a specific laboratory design; the design and, consequently, the data and type number are subject to change. No obligations are assumed to manufacture this particular device in the future unless otherwise arranged. These drawings and specifications are the property of Westinghouse Electric Corporation, Electronic Tube Division, and shall not be reproduced or copied or used as the basis for the manufacture or sale of apparatus and/or devices without permission.

Westinghouse

DEVELOPMENTAL DEVICE
Tentative Data

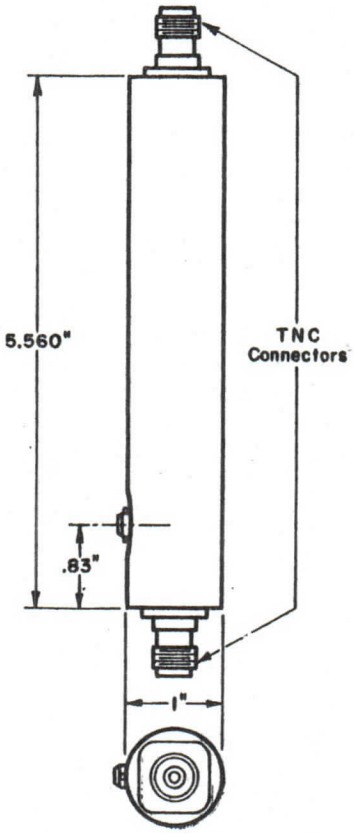

MICROWAVE SWITCH TUBE TYPE WX-5303

The WX-5303 is a unique "tail clipping" switch which can be used to reduce the fall time of a transmitter pulse to the range of .15 nanoseconds and to reduce the output pulse width. The tube is triggered by means of a 2 KV pulse applied to a control electrode. It can be designed to operate over any 100 mc band in X-band to meet specific requirements. Operation has been demonstrated over a wide range of pulse parameters with varying rf pulse fall time and jitter. Stable performance can be obtained at pulse repitition rates up to 2000 pps by the use of a dc bias on a control electrode.

Typical Performance Characteristics

Insertion Loss - 0.4 db

VSWR - 1.15 (center frequency)

RF Peak Power - 80 KW

Pulse Width - 0.5 usec

Repetition Rate - 1000 pps

Trigger Voltage - 2 KV

Breakdown Time - 15 nanoseconds

Fired Isolation - 15 DB

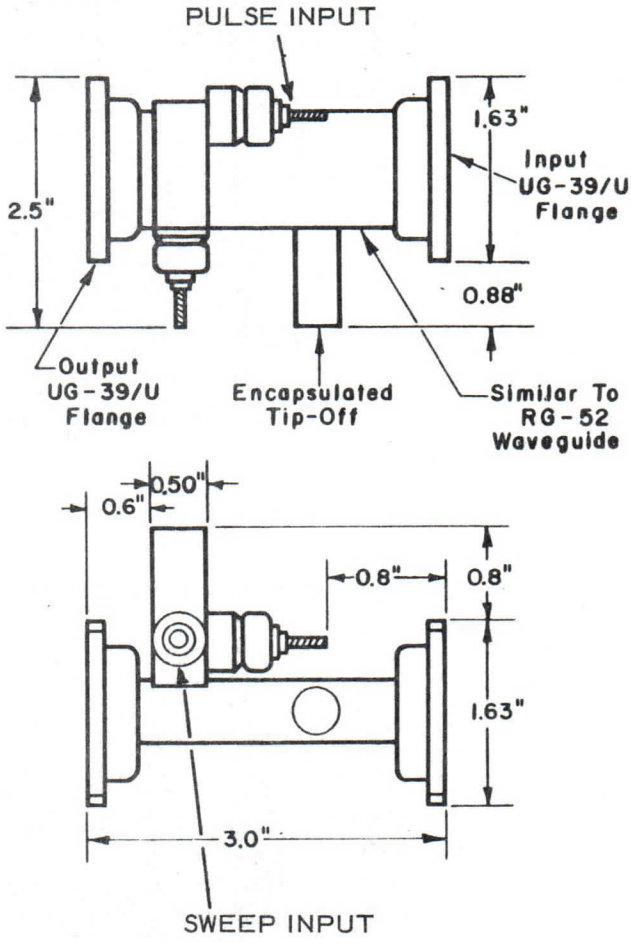

Δ The WX- number identifies a specific laboratory design; the design and, consequently, the data and type number are subject to change. No obligations are assumed to manufacture this particular device in the future unless otherwise arranged. These drawings and specifications are the property of Westinghouse Electric Corporation, Electronic Tube Division, and shall not be reproduced or copied or used as the basis for the manufacture or sale of apparatus and/or devices without permission.

Westinghouse

DEVELOPMENTAL DEVICE
Tentative Data

TYPICAL CLIPPING CHARACTERISTICS

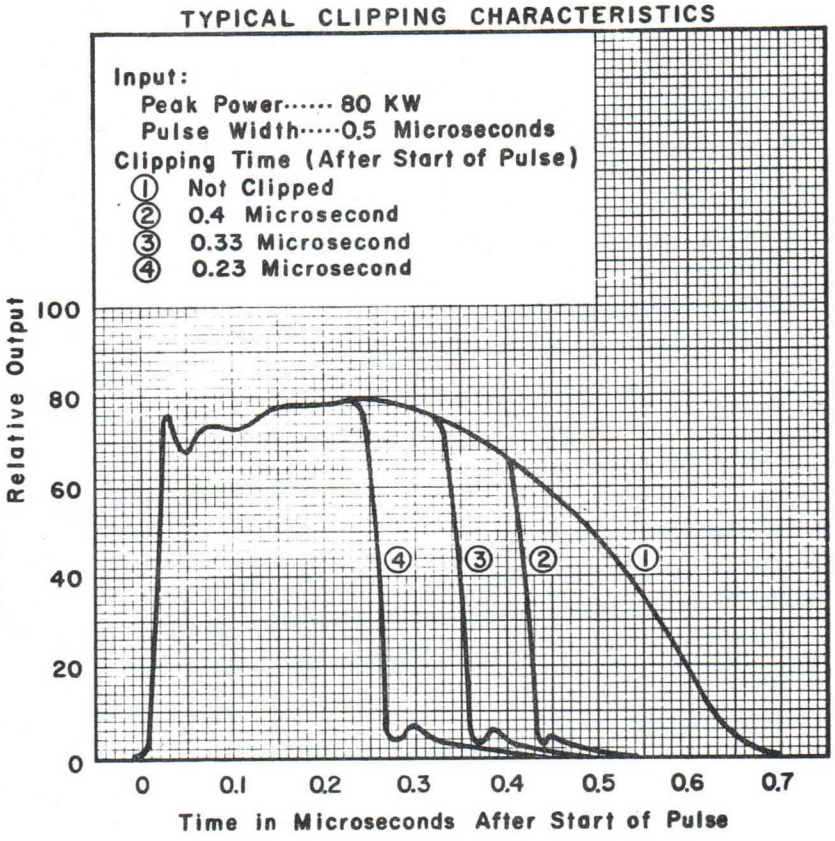

TAIL-CLIPPING SWITCH TUBE MODULATOR CIRCUIT

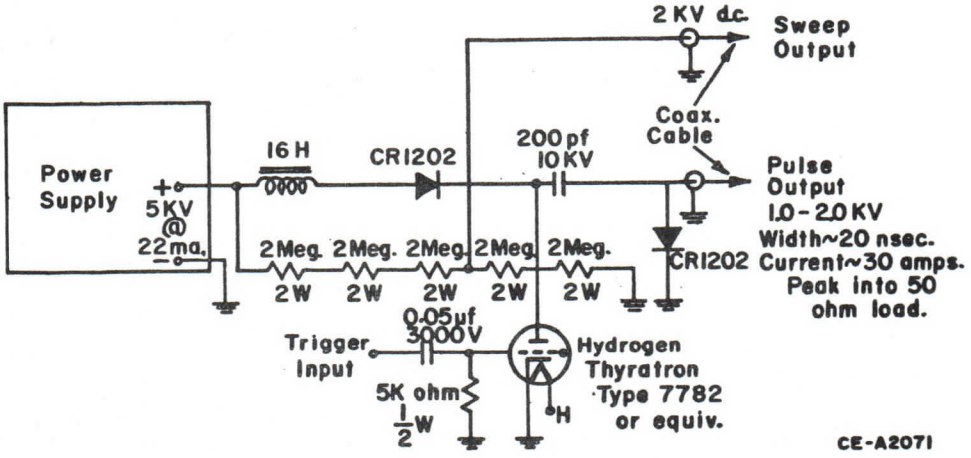

HIGH SPEED
SOLID-STATE MICROWAVE SWITCH TYPE WX-5329
5.4 to 5.9 Gc.

The WX-5329 is a high speed, C-band, coaxial, single-pole single-throw microwave switch. This device will switch in one nanosecond with only 30 milliwatts switching power. The WX-5329, with no d-c bias, maintains an isolation of 40 dB and is compact, lightweight and rugged.

MECHANICAL	
Mounting Position	Any
Dimensions	1" x 1" x 3"
Temperature	-55 to +80°C
R. F. Connectors (Note 1)	TNC Jack
Switching Connector	BNC Jack
ELECTRICAL	
Frequency	C-Band
Band width	10% 3%
Isolation	30 dB. 40 dB
Insertion Loss	1 dB
Switching Power:	
Voltage	1.2 Volts
Current	25 mA
R. F. Power	100 mW
Switching Speed	1 nSec.
Video Impedance	50 Ohms
R. F. Impedance	50 Ohms

NOTE

1. The switch may be supplied, under other numbers, with different connectors.

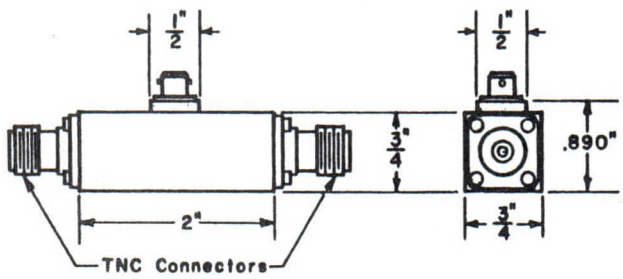

Δ The WX- number identifies a specific laboratory design; the design and, consequently, the data and type number are subject to change. No obligations are assumed to manufacture this particular device in the future unless otherwise arranged. These drawings and specifications are the property of Westinghouse Electric Corporation, Electronic Tube Division, and shall not be reproduced or copied or used as the basis for the manufacture or sale of apparatus and/or devices without permission.

BROAD-BAND
SOLID STATE MICROWAVE SWITCH TYPE WX-5385
1.7 to 5.5 Gc.

The WX-5385 is a broad-band, coaxial single-pole single-throw microwave switch. This device, with no d-c bias, provides a minimum of 23 dB isolation from 1.7 to 5.5 gigacycles and is compact, lightweight and rugged.

MECHANICAL

Mounting Position	Any
Dimensions	1" x 1" x 4"
Temperature	-55 to +70°C
R. F. Connectors (Note 1)	TNC Jack
Switching Connector	BNC Jack

ELECTRICAL

Frequency	1.7 to 5.5 Gc.
Insertion Loss	2.5 max dB
Switching Power:	
Voltage	2 Volts
Current	25 mA
R. F. Power	1 (cw) Watt
Isolation	23 min dB
Switching Speed	10 n Sec.
Video Impedance	50 Ohms
R. F. Impedance	50 Ohms

NOTE

1. The switch may be supplied, under other numbers, with different connectors.

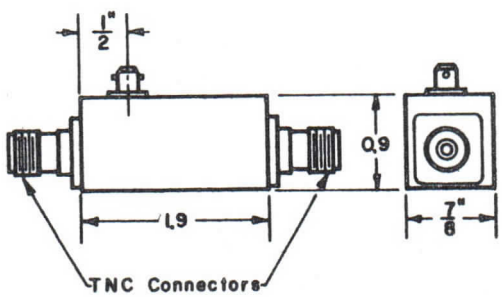

Δ The WX- number identifies a specific laboratory design; the design and, consequently, the data and type number are subject to change. No obligations are assumed to manufacture this particular device in the future unless otherwise arranged. These drawings and specifications are the property of Westinghouse Electric Corporation, Electronic Tube Division, and shall not be reproduced or copied or used as the basis for the manufacture or sale of apparatus and/or devices without permission.

May 15, 1955

Gas Switching Window Tube WL-5939

The WL-5939 is a fixed-tuned gas switching window designed for use in high power pulsed systems operating at frequencies in the 1300 megacycle region. Used in pairs, spaced approximately a quarter-wave apart, it constitutes a broad-band pre-TR device.

GENERAL DATA

Electrical:

	Max.	Typical	Min.	
Peak Power	800	500	—	Kw
Average Power	500	—	—	W
Pulse Duration	4	—	—	μsec
Duty Cycle	.001	.0006	—	
Ambient Temperature	+60	—	−20	°C
Transmitter Power Output*	—	—	10	Kw

Mechanical:

Mounting Position	Any
Outline Dimensions	See Page 2
Mounting Flange	
Female	UG-417/U or UG-368/U
Male	UG-369/U
Wave Guide	RG-69/U

VOLTAGE STANDING WAVE RATIO VS. FREQUENCY FOR A SINGLE WINDOW AND FOR A COMBINATION OF TWO WINDOWS RESONANT AT 1286 MC/SEC.

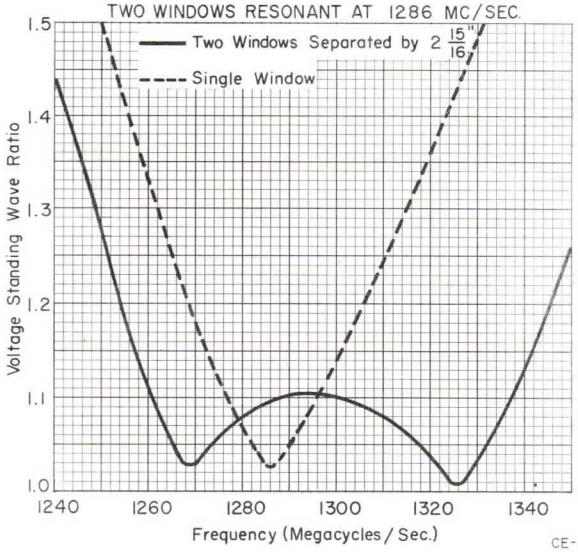

CE-A1009

Electrical Data, Single Window:

	Max.	Typical	Min.	
Resonant Frequency	1292	—	1280	Mcs
Low Level Input V.S.W.R.		See Graph		
Loaded Q	3.4	—	—	
Insertion Loss at Resonance	0.3	—	—	db
Leakage Power, Average Over Pulse at 500 Kw, 4 μsec, 150 pps	6.0	4.5	—	Kw
Leakage Power, Average Over Pulse at 500 Kw, 1 μsec, 600 pps	6.5	5.0	—	Kw
Recovery Time at 500 Kw, 3 db down	36.0	12	—	μsec
Arc Loss at 500 Kw	0.08	—	—	db

Electrical Data, Two Windows—Separation 2-15/16" between Centerlines

	Max.	Typical	Min.	
Operational Band	1350	—	1250	Mcs
Low Level Input V.S.W.R.	1.4	See Graph		
Insertion Loss	0.6	—	—	db
Leakage Power, Average Over Pulse at 500 Kw, 4 μsec 150 pps	6.0	4.5	—	Kw
Leakage Power, Average Over Pulse at 500 Kw, 1 μsec, 600 pps	6.5	5.0	—	Kw
Recovery Time at 500 Kw, 3 db down	36.0	12.0	—	μsec
Arc Loss at 500 Kw	0.08	—	—	db

*Minimum Power required for Tube break-down.

Initial Issue

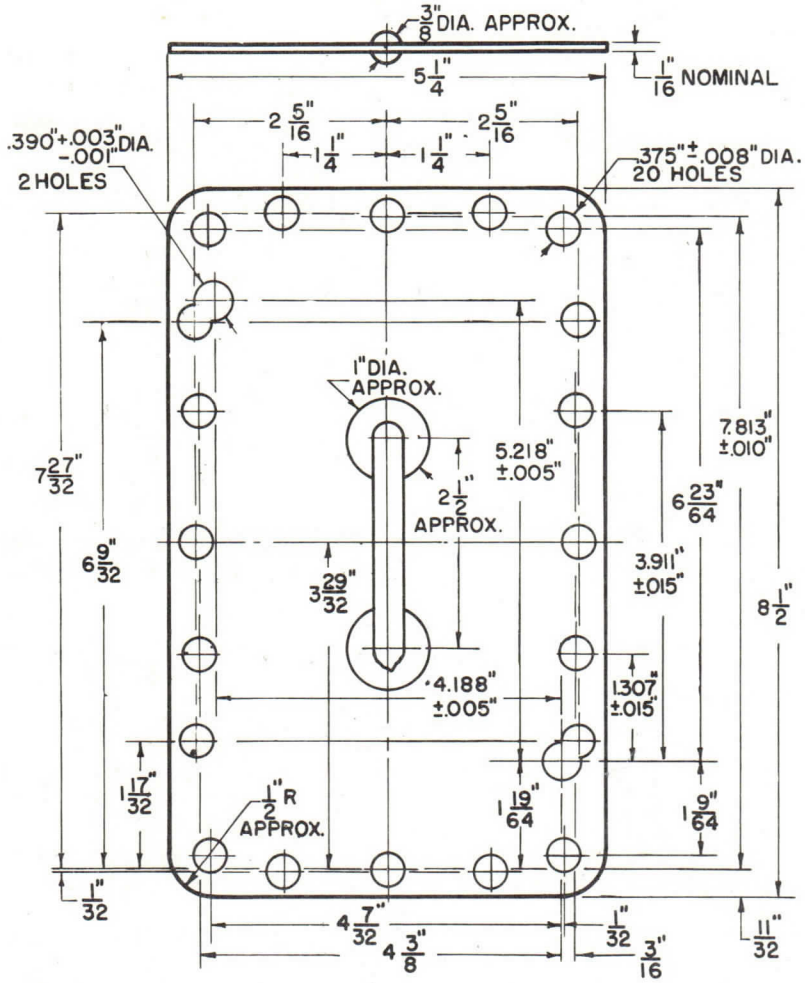
3/8" DIA. APPROX.
1/16" NOMINAL
5 1/4"
2 5/16"
2 5/16"
1 1/4"
1 1/4"
.390" +.003" -.001" DIA.
2 HOLES
.375" ±.008" DIA.
20 HOLES
1" DIA. APPROX.
5.218" ±.005"
2 1/2" APPROX.
7.813" ±.010"
6 23/64"
3.911" ±.015"
7 27/32"
6 9/32"
3 29/32"
8 1/2"
4.188" ±.005"
1.307" ±.015"
1 17/32"
1/2" R APPROX.
1 19/64"
1 9/64"
1/32"
4 7/32"
4 3/8"
1/32"
3/16"
11/32"

CE-A1010

February 1, 1966

Ka BAND CRYSTAL PROTECTOR TYPE WL-8649

The WL-8649 is a gas-type receiver protector with a frequency response of 34.5 to 35.2 gigahertz.

The gas-type receiver protector type WL-8649 can protect crystals having burnout ratings greater than 0.15 ergs from damage by 8 kilowatt peak power signals in the range from 34.5 to 35.2 gigahertz. The WL-8649 features longlife, rugged construction and fast recovery time at low temperatures and is especially applicable to fast recovery radar systems.

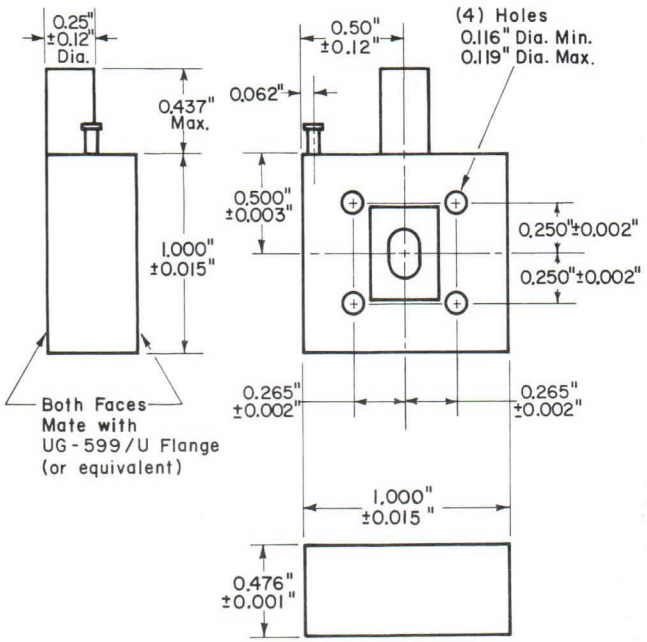

MECHANICAL

Mounting Position	Any
Mounting	Between 2-UG-599/U Flanges (or equivalent) spaced 0.476" ± 0.001" apart in RG-96/U waveguide.
Net Weight	3.2 Ounces
Cooling	None Required
Ignitor Connector	Solderable Terminal

IGNITOR

Ignitor Power Supply:		
Open Circuit Voltage (d-c)	870	Volts
Internal Resistance	2	Megohms
Ignitor Current	150	Microamperes
Ignition Time (Max. Warm-Up)	5	Seconds

MAXIMUM RATINGS

Absolute Maximum Values

Peak Incident Power	8 max.	Kilowatts
Temperature:		
Storage	125 max.	°C
Operating:		
Negative	54 max.	°C
Positive	95 max.	°C
Duty Cycle	0.00025 max.	–

TYPICAL OPERATION

Frequency	34.5 to 35.2	Gigahertz
Peak Incident Power	8	Kilowatts
VSWR	1.50	–
Pulse Duration	100	Nanoseconds
Pulse Repetition Rate	2200	Pulses/Second
Max. Recovery Time to 3 dB point	0.5	Microsecond
Insertion Loss	0.50	Decibel
Leakage:		
Spike (Max.)	0.12	Ergs
Flat	50	Milliwatts

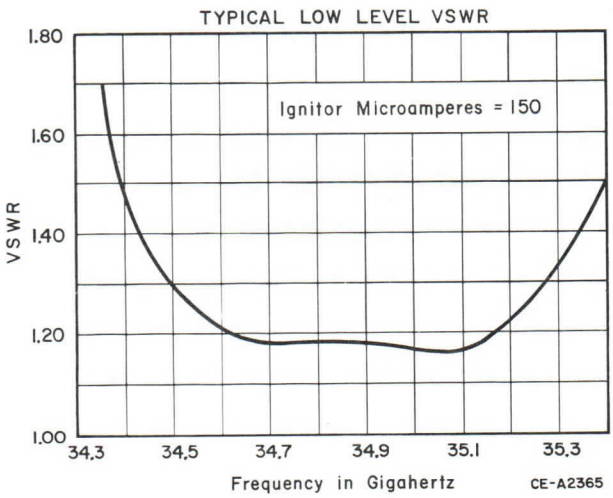

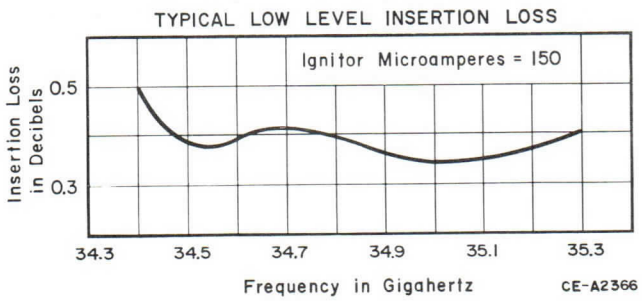

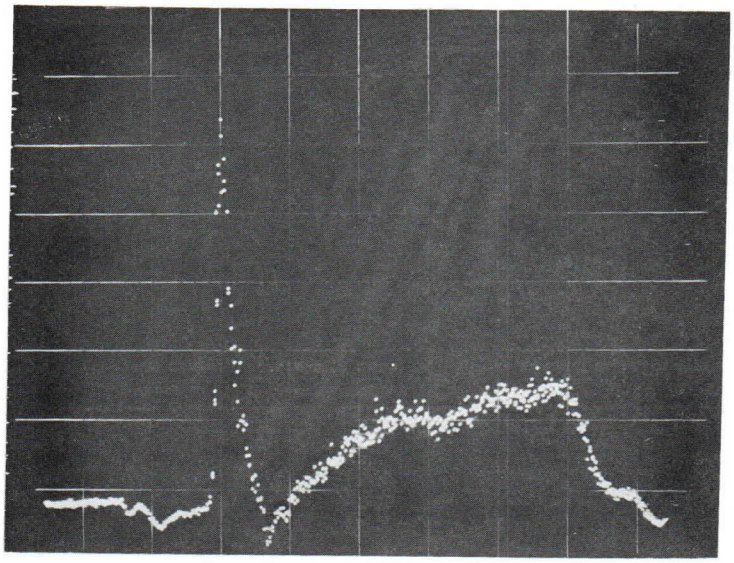

TEST CONDITIONS

Incident Power = 6 KW
Pulse Duration = 100 nSec
Pulse Rep-Rate = 2200 PPS
Frequency = 34.8 GHz
Ignitor Current = 110 μA

INSTRUMENTATION

HP Sampling Oscilloscope
Crystal – 1N53C
0 Attentuation between Crystal & Tube
Horizontal Scale = 20 nSec/cm
Vertical Scale = 6.75 mW/cm
Flat Leakage Power = 11 mW

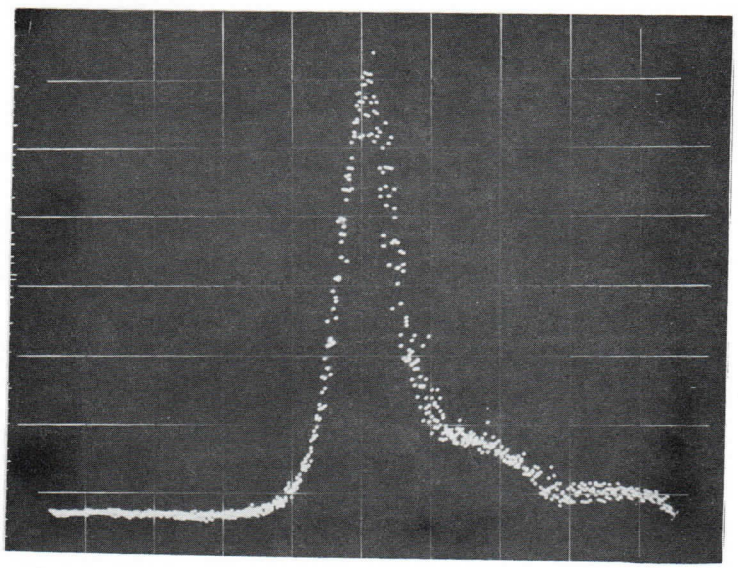

TEST CONDITIONS

Incident Power = 6 KW
Pulse Duration = 100 nSec
Pulse Rep-Rate = 2200 PPS
Frequency = 34.8 GHz
Ignitor Current = 110 μA

INSTRUMENTATION

HP Sampling Oscilloscope
Crystal – 1N53C
20 dB Attenuation between Cyrstal & Tube
Horizontal Scale = 2 nSec/cm
Vertical Scale = 0.675 W/cm
Spike Height = 4.2 Watts
Spike Energy = 0.08 Ergs
Psuedo Flat Energy = 0.013 Ergs
Psuedo Flat Power = 400 mW

The information contained herein is supplied without assuming responsibility for infringement of patents or other rights of third parties which may result from its use. No license is granted by implication or otherwise under any patent or patent rights of Westinghouse Electric Corporation.

Fast Recovery Crystal Protector for X-Band
WX-31083

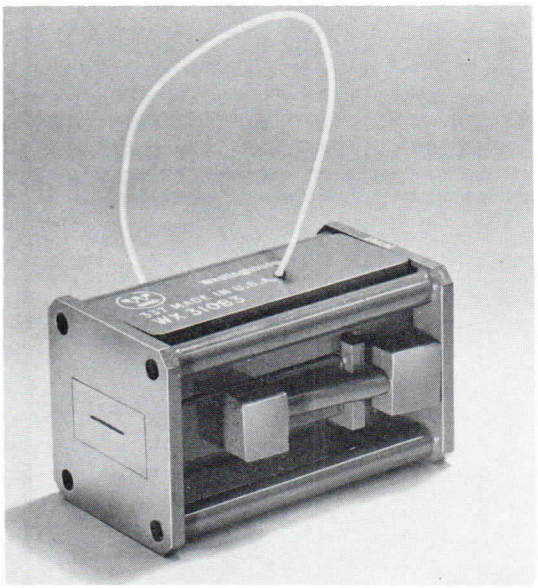

Westinghouse has developed a gas-type receiver protector for extremely high pulse recurrence rate systems. It is designed to protect crystal detectors or parametric amplifiers with burnout ratings of 0.05 ergs or greater. The unit is applicable to radar systems requiring ultra-fast recovery at high power levels. The tube will operate over wide ranges of duty cycles at high altitude between wide temperature extremes.

Typical Operating Characteristics

Frequency	9450 - 9550 gcs
Bandwidth	1%
Power	200 watts peak
Spike Leakage	0.03 ergs/pulse
Flat Leakage	60 milliwatts
Duty Cycle	0.10
PPS	200 KCS
Recovery Time, 3 db	0.25 max. microseconds
Insertion Loss	0.50 max. dbs
VSWR	1.20
Altitude	Sea Level to 70,000 feet
Operating Temperature	-54° to +95°C

Δ The WX- number identifies a specific laboratory design; the design and, consequently, the data and type number are subject to change. No obligations are assumed to manufacture this particular device in the future unless otherwise arranged. These drawings and specifications are the property of Westinghouse Electric Corporation, Electronic Tube Division, and shall not be reproduced or copied or used as the basis for the manufacture or sale of apparatus and/or devices without permission.

Westinghouse

Ion Sorption Pumps

Ceramic-Metal Construction
Range 10^{-4} Torr to 10^{-9} Torr

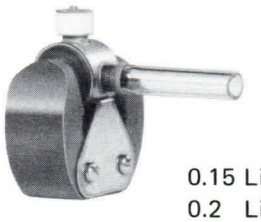

0.15 Liter/Second
0.2 Liter/Second

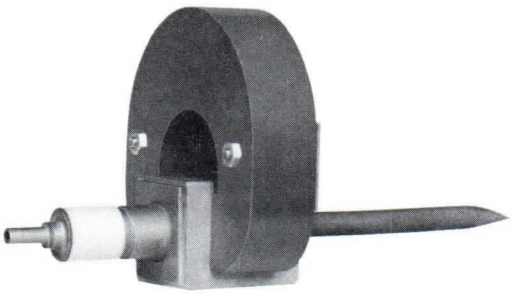

1 Liter/Second

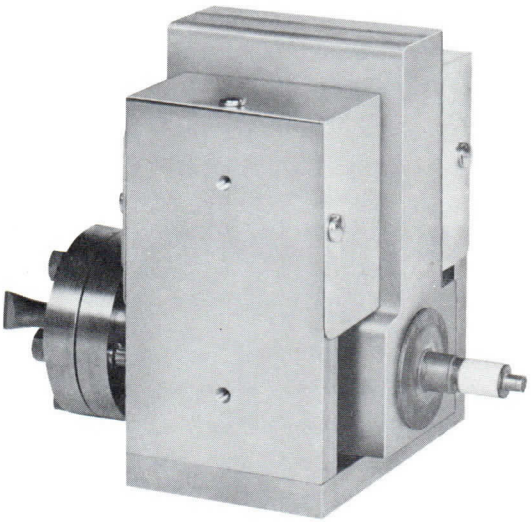

8 Liters/Second

Westinghouse Ion Sorption Pumps are available with pumping speeds of 0.15 liter/second, 0.2 liter/second, 1 liter/second, and 8 liters/second for dry air. These pumps are the same rugged, high quality designs that have been used on Westinghouse electronic tubes for the past seven years. They represent seven years of pump manufacturing and application experience.

The Westinghouse vacuum research program, well known for the development of the Bayard-Alpert and Schulz-Phelps ionization vacuum gauges, is continuing to explore new processes to solve your pumping problems.

September 1968
Supersedes TD 86-437 dated March 1968
S6–2D–11C, S5–11B, WI–800

Westinghouse

The Westinghouse Electronic Tube Division

Westinghouse is a major developer and manufacturer of electronic tubes with over thirty years experience. Prior to 1951, electronic tubes were manufactured as a part of the Corporation's Lamp Division in Bloomfield, New Jersey. The Electronic Tube Division was formed in 1951 as a separate unit at its present location in Elmira, New York. This plant provides Westinghouse with the latest in manufacturing and laboratory facilities.

At the Electronic Tube Division, separate engineering groups represent each family of tubes - Image Tubes, Special Purpose Tubes, Display Tubes, and Entertainment Tubes. Modern and fully equipped laboratory and testing facilities are available for use by these groups. These highly skilled teams are responsible for the development of SEC Camera Tubes, Hollow Cathode Devices, Vacuum Interrupters, Color Picture Tubes, and the largest High Output Vacuum Amplifier Tubes in the industry.

Westinghouse Appendage Ion Pumps

The Westinghouse Electric Corporation offers a complete selection of Appendage Ion Pumps. These pumps are small Ion Sorption Pumps designed for use as an integral part of a sealed vacuum device. They employ the gettering effect of sputtered cathode material generated by a cold cathode discharge and are available with pumping speeds of 0.15 liter/second, 0.2 liter/second and 1.0 liter/second. Developed for use as appendage pumps on Westinghouse high vacuum electronic devices, Westinghouse Appendage Ion Pumps are available in three standard configurations with a choice of five tubulation materials. Demountable magnet brackets are available for the 0.2 liter/second pumps.

Contents:

	Mechanical Data	Electrical Data
Appendage Ion Pumps		
0.15 Liter/Second	Page 3	Pages 8 & 9
0.2 Liter/Second	Pages 4 & 5	Pages 8 & 9
1 Liter/Second	Pages 6 & 7	Pages 8 & 9
Appendage Ion Pump Magnets	Page 10	Page 10
Process Ion Pumps		
8 Liters/Second	Page 11	Page 11

Type Number Index

Tube Type		*Pages*
WL-23204	Magnet	4, 5, 10
WL-23205	Magnet	3, 10
WL-23206	Magnet	6, 7, 10
WL-23445	8 L/S	11
WL-23446	Cable	3, 4, 5, 7
WL-23447	Cable	6, 11
WL-26000	0.15 L/S	3, 8, 9
WL-26001	0.15 L/S	3, 8, 9
WL-26002	0.15 L/S	3, 8, 9
WL-26003	0.15 L/S	3, 8, 9
WL-26004	0.15 L/S	3, 8, 9
WL-26005	0.15 L/S	3, 8, 9
WL-26006	0.15 L/S	3, 8, 9
WL-26007	0.15 L/S	3, 8, 9
WL-26008	0.15 L/S	3, 8, 9
WL-26009	0.15 L/S	3, 8, 9
WL-26010	0.15 L/S	3, 8, 9
WL-26011	0.15 L/S	3, 8, 9
WL-26012	0.15 L/S	3, 8, 9
WL-26013	0.15 L/S	3, 8, 9
WL-26014	0.15 L/S	3, 8, 9
WL-26015	0.2 L/S	4, 8, 9
WL-26016	0.2 L/S	4, 8, 9
WL-26017	0.2 L/S	4, 8, 9
WL-26018	0.2 L/S	4, 8, 9
WL-26019	0.2 L/S	4, 8, 9
WL-26020	0.2 L/S	4, 8, 9
WL-26021	0.2 L/S	4, 8, 9
WL-26022	0.2 L/S	4, 8, 9
WL-26023	0.2 L/S	4, 8, 9
WL-26024	0.2 L/S	4, 8, 9
WL-26025	0.2 L/S	4, 8, 9
WL-26026	0.2 L/S	4, 8, 9
WL-26027	0.2 L/S	4, 8, 9
WL-26028	0.2 L/S	4, 8, 9
WL-26029	0.2 L/S	4, 8, 9
WL-26030	0.2 L/S	5, 8, 9
WL-26031	0.2 L/S	5, 8, 9
WL-26032	0.2 L/S	5, 8, 9
WL-26033	0.2 L/S	5, 8, 9
WL-26034	0.2 L/S	5, 8, 9
WL-26035	0.2 L/S	5, 8, 9
WL-26036	0.2 L/S	5, 8, 9
WL-26037	0.2 L/S	5, 8, 9
WL-26038	0.2 L/S	5, 8, 9
WL-26039	0.2 L/S	5, 8, 9
WL-26040	0.2 L/S	5, 8, 9
WL-26041	0.2 L/S	5, 8, 9
WL-26042	0.2 L/S	5, 8, 9
WL-26043	0.2 L/S	5, 8, 9
WL-26044	0.2 L/S	5, 8, 9
WL-26045	1 L/S	6, 8, 9
WL-26046	1 L/S	6, 8, 9
WL-26047	1 L/S	6, 8, 9
WL-26048	1 L/S	6, 8, 9
WL-26049	1 L/S	6, 8, 9
WL-26050	1 L/S	6, 8, 9
WL-26051	1 L/S	6, 8, 9
WL-26052	1 L/S	6, 8, 9
WL-26053	1 L/S	6, 8, 9
WL-26054	1 L/S	6, 8, 9
WL-26055	1 L/S	6, 8, 9
WL-26056	1 L/S	6, 8, 9
WL-26057	1 L/S	6, 8, 9
WL-26058	1 L/S	6, 8, 9
WL-26059	1 L/S	6, 8, 9
WL-26060	1 L/S	6, 8, 9
WL-26061	1 L/S	6, 8, 9
WL-26062	1 L/S	6, 8, 9
WL-26063	1 L/S	7, 8, 9
WL-26064	1 L/S	7, 8, 9
WL-26065	1 L/S	7, 8, 9
WL-26066	1 L/S	7, 8, 9
WL-26067	1 L/S	7, 8, 9
WL-26068	1 L/S	7, 8, 9
WL-26069	1 L/S	7, 8, 9
WL-26070	1 L/S	7, 8, 9
WL-26071	1 L/S	7, 8, 9
WL-26072	1 L/S	7, 8, 9
WL-26073	1 L/S	7, 8, 9
WL-26074	1 L/S	7, 8, 9
WL 26075	1 L/S	7, 8, 9
WL-26076	1 L/S	7, 8, 9
WL-26077	1 L/S	7, 8, 9
WL-26078	1 L/S	7, 8, 9
WL-26079	1 L/S	7, 8, 9
WL-26080	1 L/S	7, 8, 9

Appendage Ion Pumps

0.15 Liter/Second

Ceramic-Metal Construction
Range 10^{-4} Torr to 10^{-9} Torr

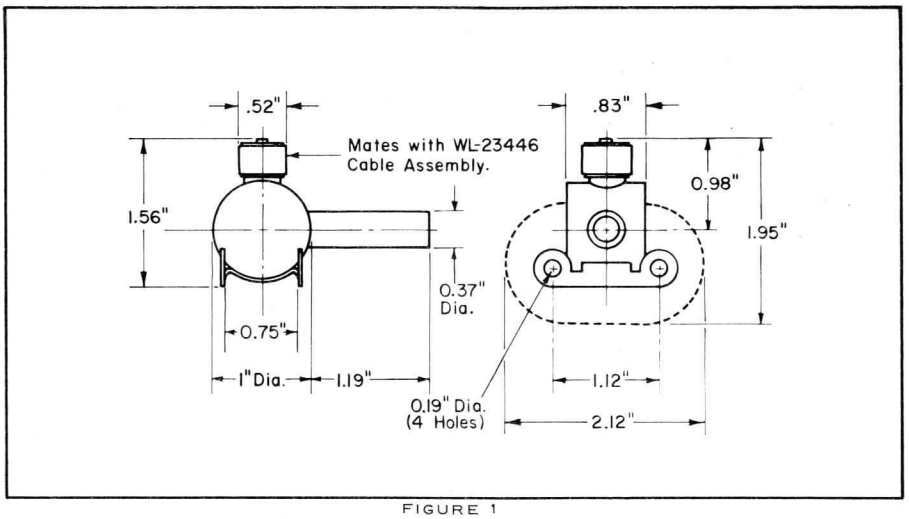

FIGURE 1

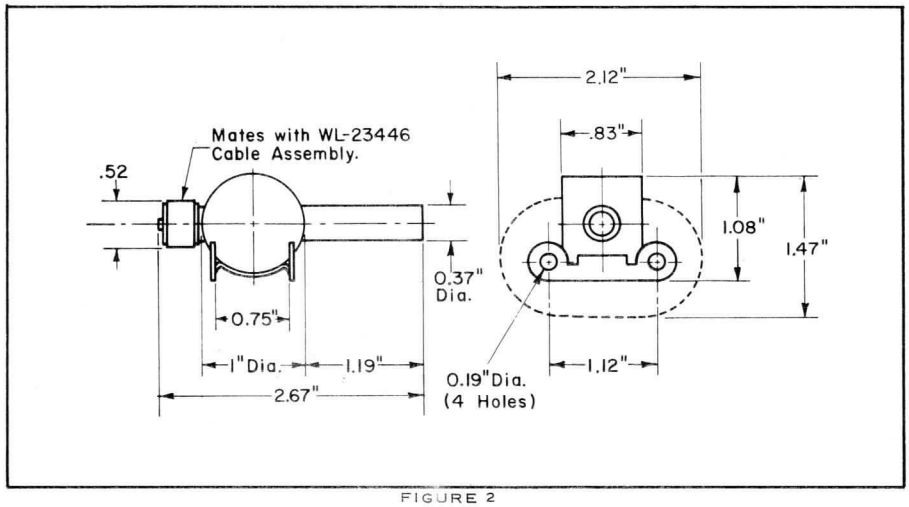

FIGURE 2

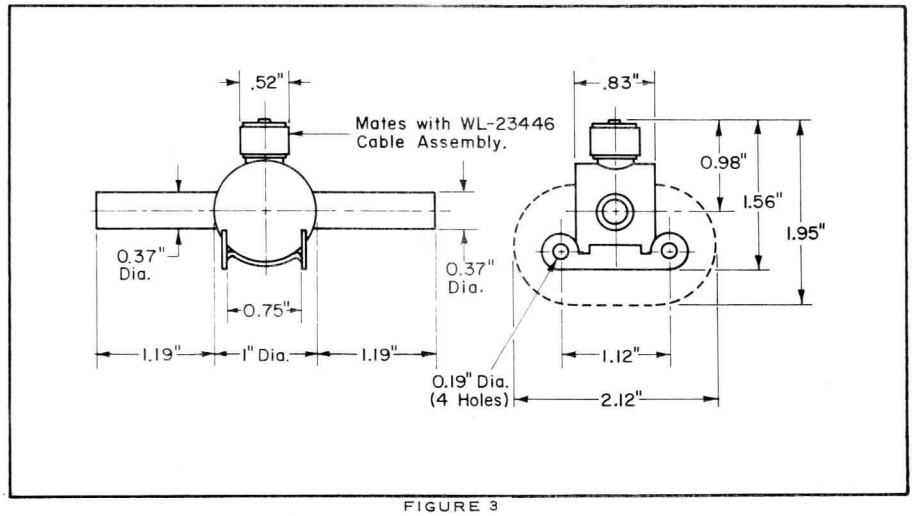

FIGURE 3

Tubulation Materials

Copper

Figure No.	Tube Type
1	WL-26000
2	WL-26001
3	WL-26002

7052 Glass

Figure No.	Tube Type
1	WL-26003
2	WL-26004
3	WL-26005

Nickel-Plated Stainless-Steel

Figure No.	Tube Type
1	WL-26006
2	WL-26007
3	WL-26008

Nickel-Plated Kovar

Figure No.	Tube Type
1	WL-26009
2	WL-26010
3	WL-26011

Kovar prepared for Glassing

Figure No.	Tube Type
1	WL-26012
2	WL-26013
3	WL-26014

Accessories

Magnet WL-23205
H.V. Cable and
Connector Assy. WL-23446

Appendage Ion Pumps

0.2 Liter/Second
Standard Bracket

Ceramic-Metal Construction
Range 10^{-4} Torr to 10^{-9} Torr

Tubulation Materials

Copper

Figure No.	Tube Type
4	WL-26015
5	WL-26016
6	WL-26017

7052 Glass

Figure No.	Tube Type
4	WL-26018
5	WL-26019
6	WL-26020

Nickel-Plated Stainless-Steel

Figure No.	Tube Type
4	WL-26021
5	WL-26022
6	WL-26023

Nickel-Plated Kovar

Figure No.	Tube Type
4	WL-26024
5	WL-26025
6	WL-26026

Kovar prepared for Glassing

Figure No.	Tube Type
4	WL-26027
5	WL-26028
6	WL-26029

Accessories

Magnet	WL-23204
H.V. Cable and Connector Assy.	WL-23446

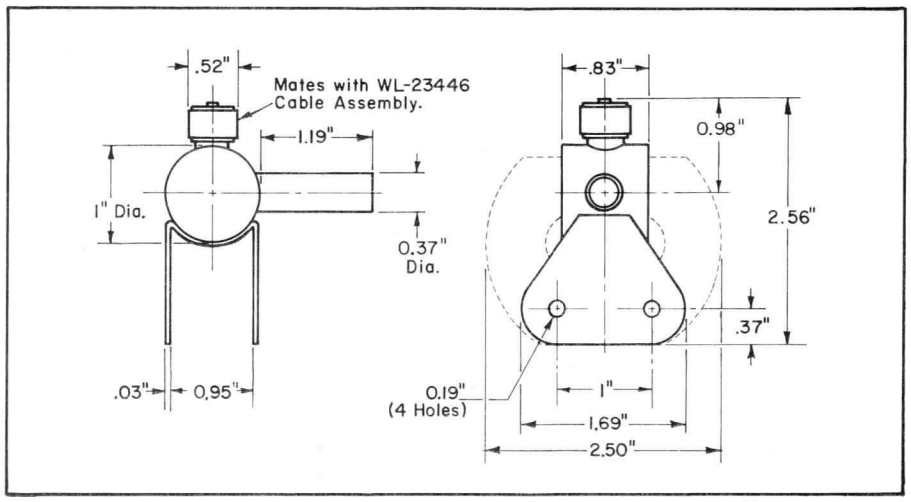

FIGURE 4

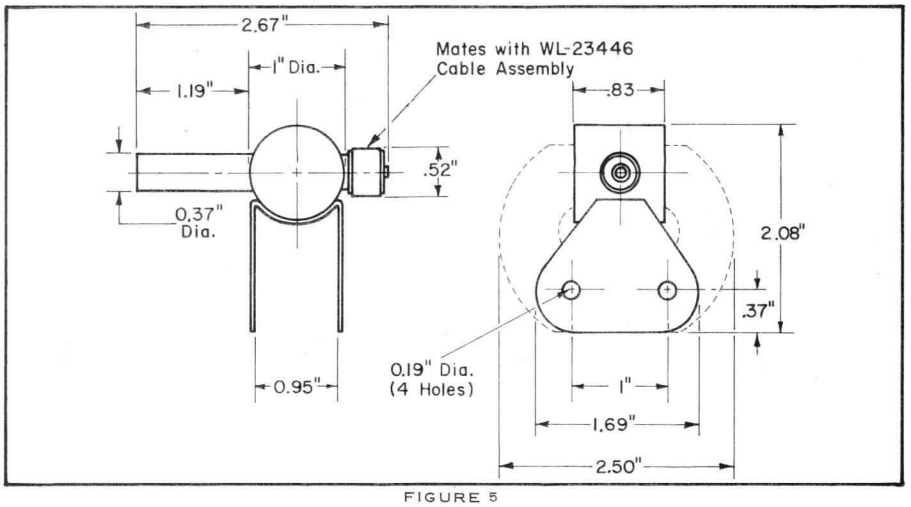

FIGURE 5

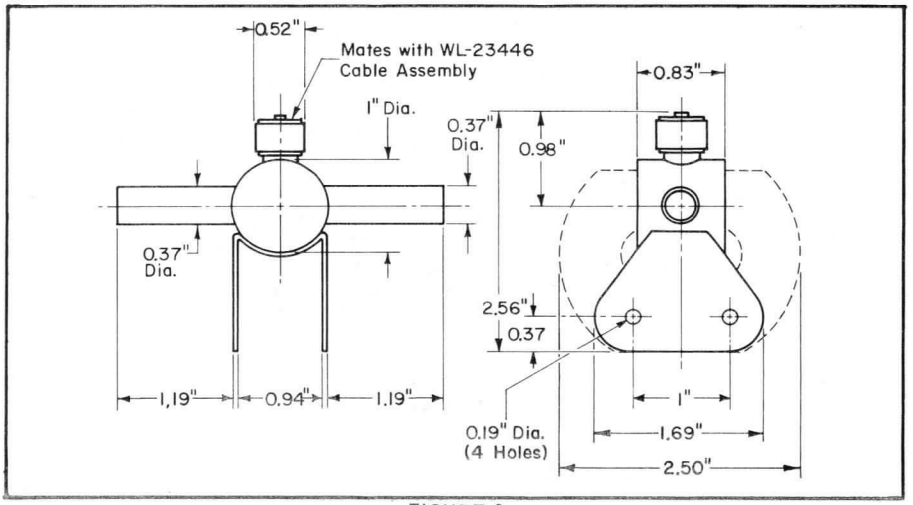

FIGURE 6

Appendage Ion Pumps

0.2 Liter/Second
Removable Brackets

Ceramic-Metal Construction
Range 10^{-4} Torr to 10^{-9} Torr

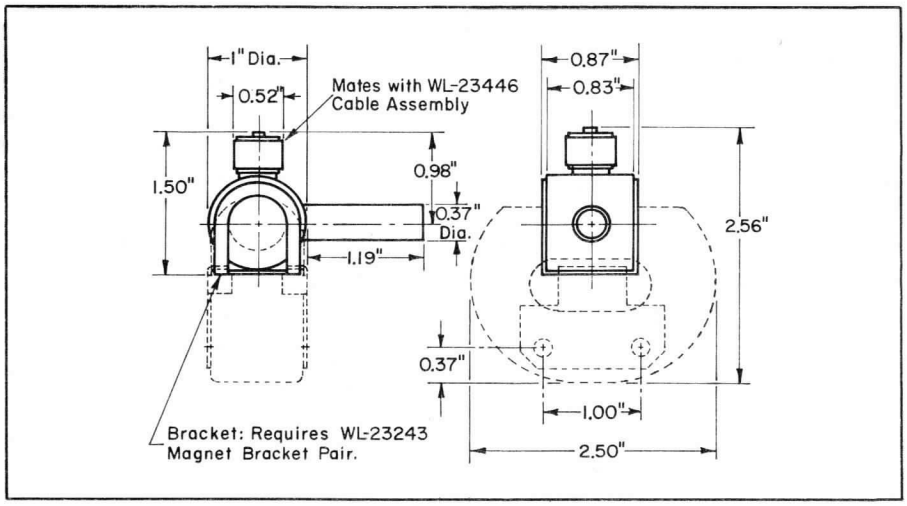

FIGURE 7

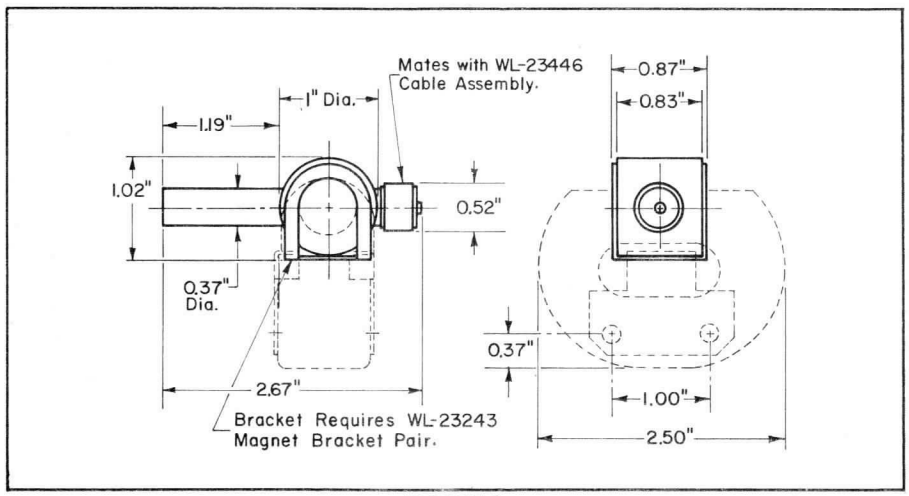

FIGURE 8

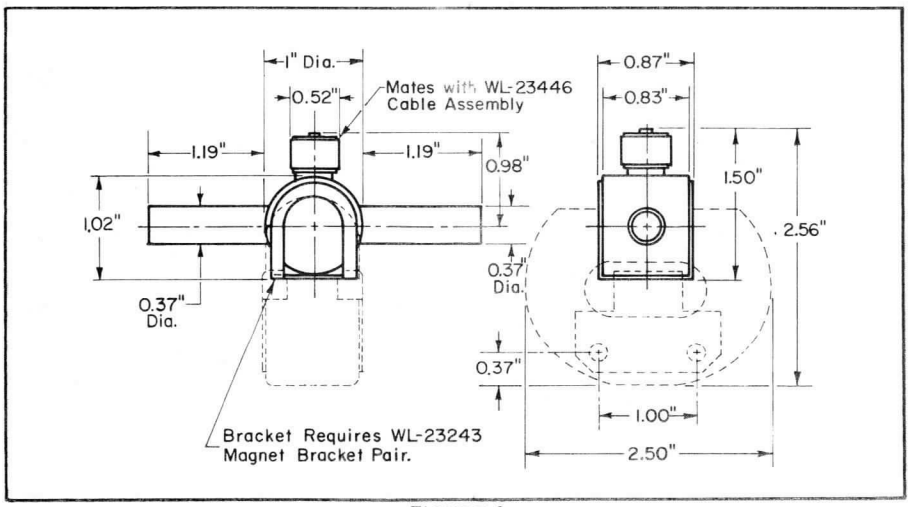

FIGURE 9

Tubulation Materials

Copper

Figure No.	Tube Type
7	WL-26030
8	WL-26031
9	WL-26032

7052 Glass

Figure No.	Tube Type
7	WL-26033
8	WL-26034
9	WL-26035

Nickel-Plated Stainless-Steel

Figure No.	Tube Type
7	WL-26036
8	WL-26037
9	WL-26038

Nickel-Plated Kovar

Figure No.	Tube Type
7	WL-26039
8	WL-26040
9	WL-26041

Kovar prepared for Glassing

Figure No.	Tube Type
7	WL-26042
8	WL-26043
9	WL-26044

Accessories

Magnet WL-23204
H.V Cable and
Connector Assy. WL-23446
Demountable Bracket Pair . . WL-23243

Appendage Ion Pumps

1 Liter/Second
Standard Electrical Connector

Ceramic-Metal Construction
Range 10^{-4} Torr to 10^{-9} Torr

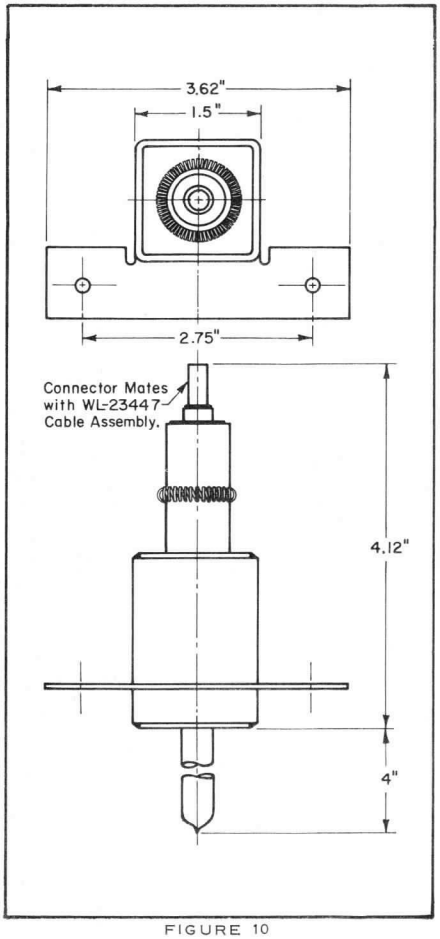

FIGURE 10

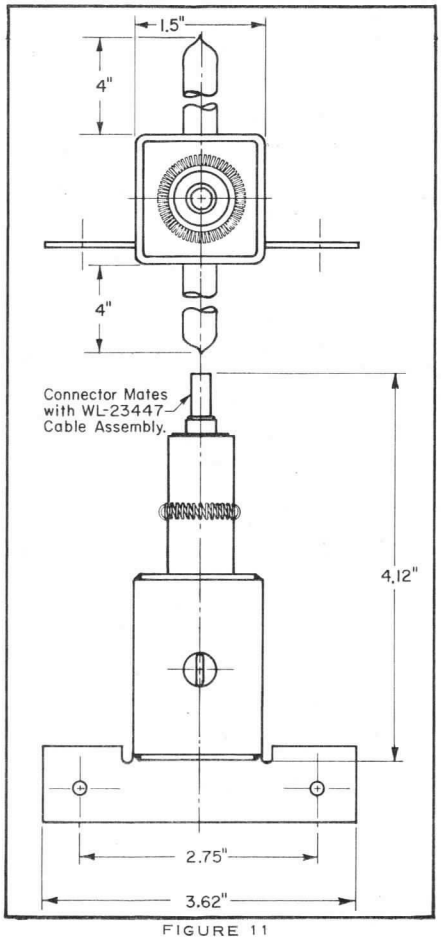

FIGURE 11

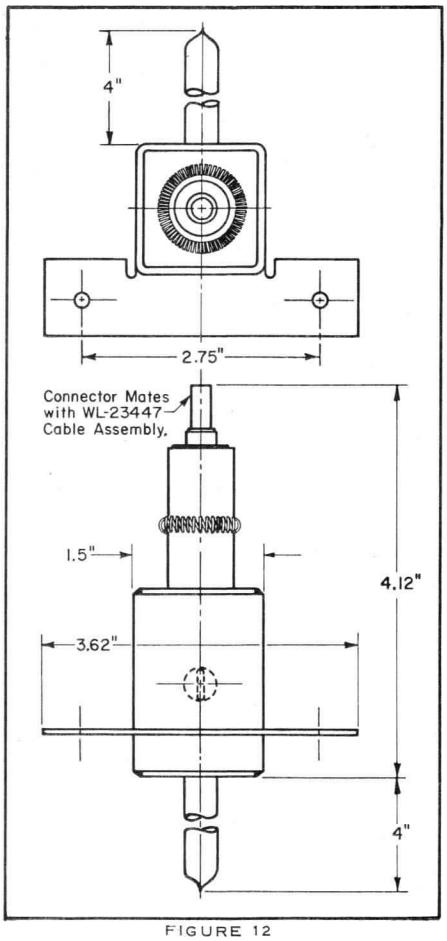

FIGURE 12

Tubulation Materials

Copper		**7052 Glass**		**Stainless-Steel**	
0.37" O.D.		**0.37" O.D.**		**0.37" O.D.**	
Figure No.	Tube Type	Figure No.	Tube Type	Figure No.	Tube Type
10	WL-26045	10	WL-26051	10	WL-26057
11	WL-26046	11	WL-26052	11	WL-26058
12	WL-26047	12	WL-26053	12	WL-26059
0.5" O.D.		**0.5" O.D.**		**0.5" O.D.**	
Figure No.	Tube Type	Figure No.	Tube Type	Figure No.	Tube Type
10	WL-26048	10	WL-26054	10	WL-26060
11	WL-26049	11	WL-26055	11	WL-26061
12	WL-26050	12	WL-26056	12	WL-26062

Accessories

Magnet	WL-23206
H.V. Cable and Connector Assembly	WL-23447

Appendage Ion Pumps

1 Liter/Second
Compact Electrical Connector

Ceramic-Metal Construction
Range 10^{-4} Torr to 10^{-9} Torr

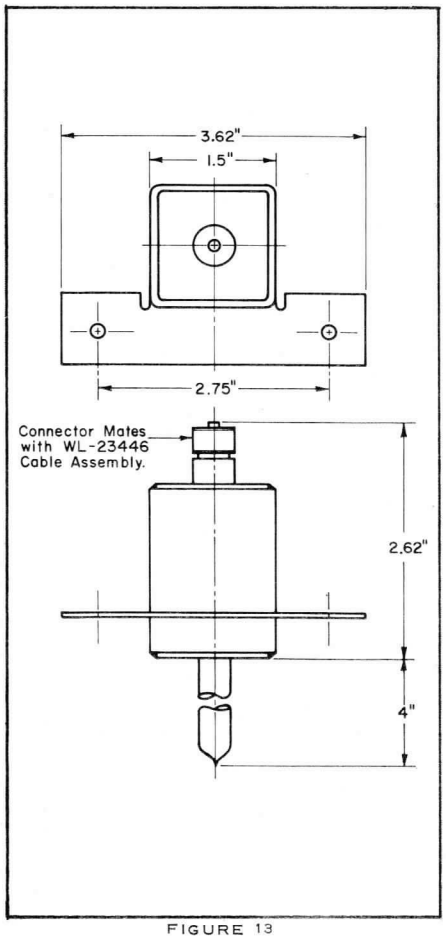

FIGURE 13

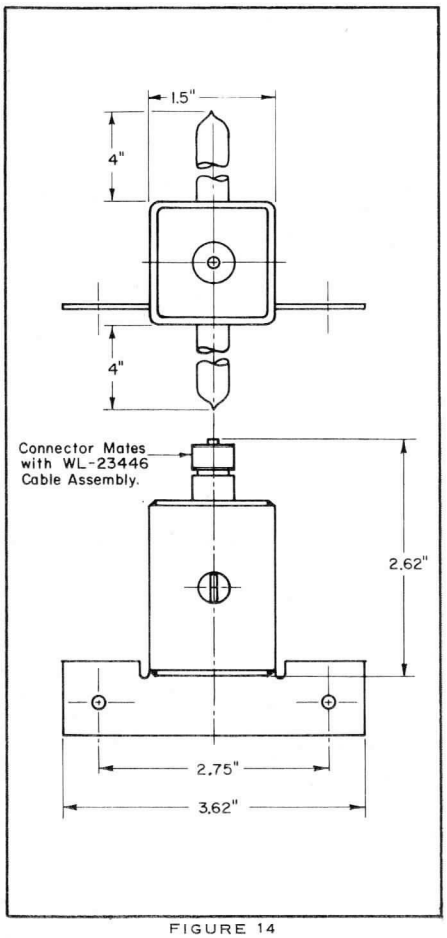

FIGURE 14

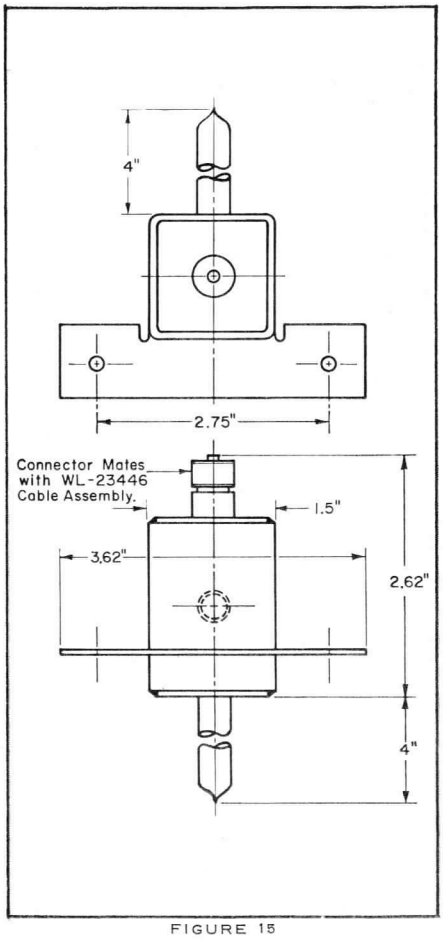

FIGURE 15

Tubulation Materials

Copper		**7052 Glass**		**Stainless-Steel**	
0.37" O.D.		**0.37" O.D.**		**0.37" O.D.**	
Figure No.	Tube Type	Figure No.	Tube Type	Figure No.	Tube Type
13	WL-26063	13	WL-26069	13	WL-26075
14	WL-26064	14	WL-26070	14	WL-26076
15	WL-26065	15	WL-26071	15	WL-26077
0.5" O.D.		**0.5" O.D.**		**0.5" O.D.**	
Figure No.	Tube Type	Figure No.	Tube Type	Figure No.	Tube Type
13	WL-26066	13	WL-26072	13	WL-26078
14	WL-26067	14	WL-26073	14	WL-26079
15	WL-26068	15	WL-26074	15	WL-26080

Accessories

Magnet	WL-23206
H.V. Cable and Connector Assembly	WL-23446

Westinghouse

Westinghouse Appendage Ion Pump Operating Data

Westinghouse Appendage Ion Pumps are small ion-sorption pumps designed for use as integral parts of high vacuum devices. They employ a cold cathode discharge to provide a clean, continuous, oil-free pumping action. The gas discharge is produced between a tubular anode and two cathode plates. The electrons in the discharge are forced into spiral trajectories by a magnetic flux applied parallel to the axis of the anode. Gas ions generated in the discharge, bombard the cathode plates and are absorbed by the resultant sputtered cathode material.

Starting and operating parameters are tabulated below. Explanatory notes have been included to provide additional operating data.

Starting	Minimum	Typical	Maximum	Units
Voltage (Note 1)	–	2300	–	Volts
Power:				
Momentary (Note 2)	–	–	35	Watts
Continuous (Note 2)	–	25	–	Watts
Temperature (Note 2)	–	–	30	°C
Pressure (Note 2)	–	–	10^{-3}	Torr
Current (Note 3)	–	–	–	–
Operating				
Voltage	2300	–	3600	Volts
Power	–	–	25	Watts
Temperature:				
Operating (Note 5)	–	–	250	°C
Non-Operating (Note 5)	–	–	550	°C
Pressure Range (Note 6)	5×10^{-9}	–	10^{-4}	Torr
Current	See Figure 16			
Magnetic Characteristics				
Magnetic Flux Density:				
0.15 Liter/Second (Note 4)	900	–	–	Gauss
0.20 Liter/Second (Note 4)	1200	–	–	Gauss
1.0 Liter/Second (Note 4)	1100	–	–	Gauss

Operational Notes

1. The starting voltage is a function of pump pressure. Suggested power supply parameters are:

   Open Circuit Voltage . . . 3200 Volts d.c.
   Short Circuit Current . . . 200 mA d.c.
   Power . . . . . 25 Watts

2. Pump heating may inhibit the onset of pumping by causing the re-emission of previously pumped gases and decreasing the rate of absorption of gas ions by the sputtered cathode material. Such heating effects may be controlled by reducing the pump current, power, pressure or temperature during the starting phase. At high pressures the pump will start more readily if the pump body is cooled, however thermal shocking of the ceramic to metal seal must be avoided.
3. Starting currents are a function of pump gas pressure.
4. The net magnetic flux density at the pump must meet the specified minimum levels to provide consistent starting and operation at the rated speed. Magnetic fluxes from sources external to the magnet-pump assembly may reduce the net flux at the pump to levels below the rated value.
5. The pumps may be vacuum baked at temperatures up to 550° C. Once the pump has been started its operating temperature may be increased to 250° C.
6. The ultimate pressure attainable by new pumps is limited by the partial pressure of hydrogen. Hydrogen is not pumped readily in the presence of heavier gases and an equilibrium between hydrogen pumping and re-emission occurs in the 10^{-9} torr range. The ultimate pressure attained by a previously run pump may be somewhat higher depending upon the quantity and type of gases previously pumped.

Starting Procedure For Westinghouse Appendage Ion Pumps

1. Attach the pump to the loading volume by methods suitable for high vacuum work and leak check the assembly.
2. Exhaust and bake the pump and its attached working load at the maximum temperature that the working volume will withstand but not exceeding the maximum pump temperature rating of 550° C.
3. Allow assembly to cool to the ambient temperature.
4. Attach the magnet and high voltage lead to the pump.
5. Start the pump by applying approximately 2.8 kilovolts d.c. to the anode lead.
6. Monitor the pump current. The start of pumping will be indicated by a sharp drop in current. If the pump current does not fall to a level consistent with the pressure in the device, (see figure 16. Page 9) turn the high voltage off and check for proper magnet location and voltage levels. Leak check the assembly if high current levels persist.

Appendage Ion Pumps

0.15 Liter/Second
0.2 Liter/Second
1 Liter/Second

Ceramic-Metal Construction
Range 10^{-4} Torr to 10^{-9} Torr

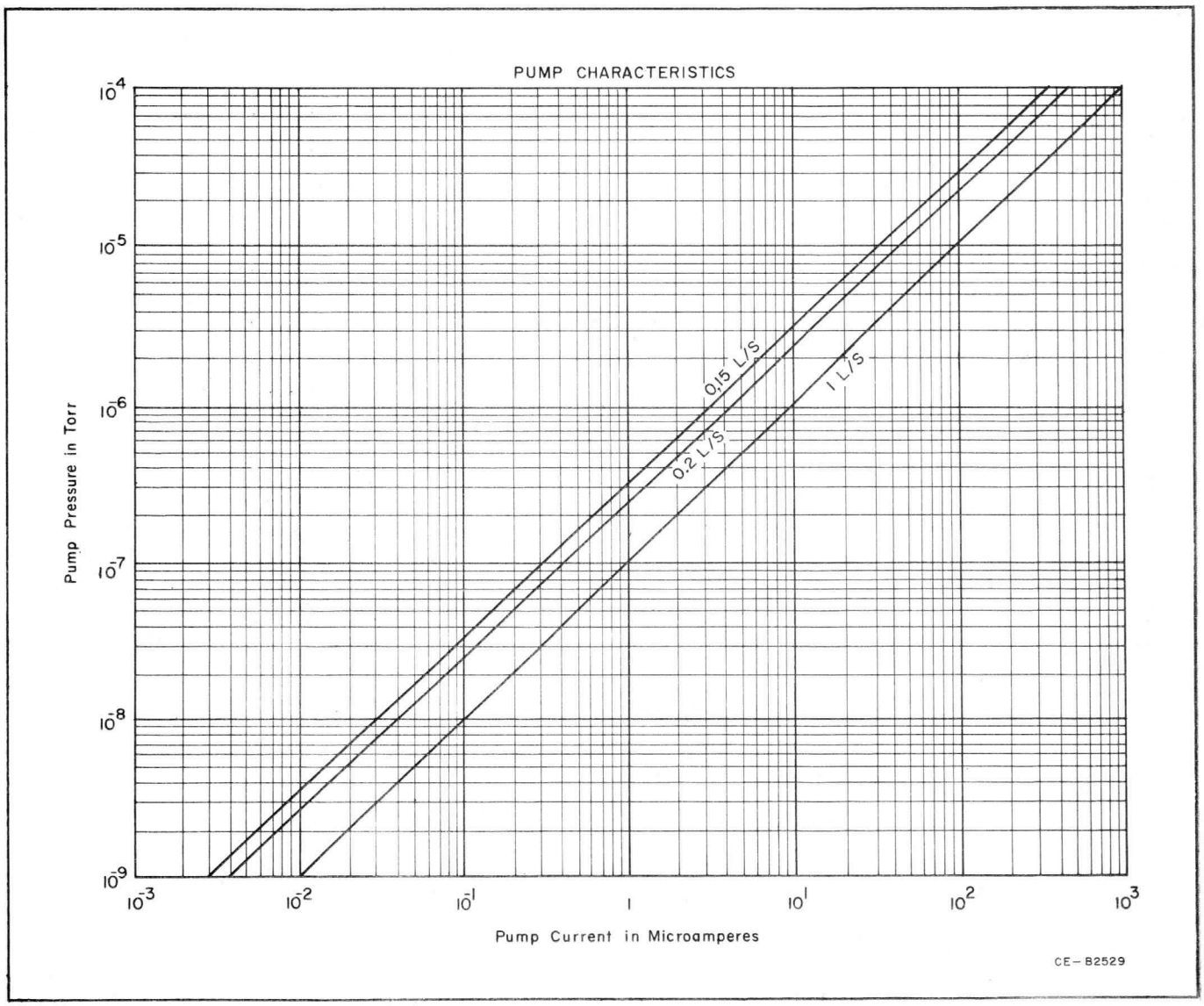

FIGURE 16

Accessory Magnets for Appendage Ion Pumps

Material: Alnico V
Max. Temp.: 250°C

WL-23205 Magnet

The WL-23205 is a high quality Alnico V magnet designed for use with Westinghouse 0.15 liter/sec appendage ion pumps. The magnet produces a flux density of 900 gauss in a 0.85 inch air gap with pole faces 0.56 inches in diameter.

Operational Data

Material	Alnico V
Air Gap Width	0.85 Inches
Pole Face Area	0.25 in^2
Air Gap Flux	900 Gauss Minimum at 22°C
Maximum Temperature	250°C (Note 1)
Percent Flux Density Reduction at 250°C	See Figure 18

Note (1) Room temperature flux density will be reduced approximately 10% by high temperature excursion.

WL-23204 Magnet

The WL-23204 is a high quality Alnico V magnet designed for use with Westinghouse 0.2 liter/sec appendage ion pumps. The magnet produces a flux density of 1200 gauss in a 0.85 inch air gap with pole faces 0.56 inches in diameter.

Operational Data

Material	Alnico V
Air Gap Width	0.85 Inches
Pole Face Area	0.25 in^2
Air Gap Flux	1200 Gauss Minimum at 22° C
Maximum Temperature	250° C Note (1)
Percent Flux Density Reduction at 250° C	See Figure 20

Note (1) Room temperature flux density will be reduced approximately 10% by high temperature excursion.

WL-23206 Magnet

The WL-23206 is a high quality Alnico V magnet designed for use with Westinghouse 1.0 liter/sec appendage ion pumps. The magnet produces a flux density of 1100 gauss in a 1.52 inch air gap with 1" square pole faces.

Operational Data

Material	Alnico V
Air Gap Width	1.52 Inches
Pole Face Area	1.0 in^2
Air Gap Flux	1100 Gauss Minimum at 22°C
Maximum Temperature	250°C Note (1)
Percent Flux Density Reduction at 250°C	See Figure 22

Note (1) Room temperature flux density will be reduced approximately 10% by high temperature excursion.

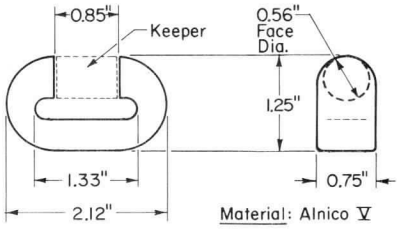

FIGURE 17

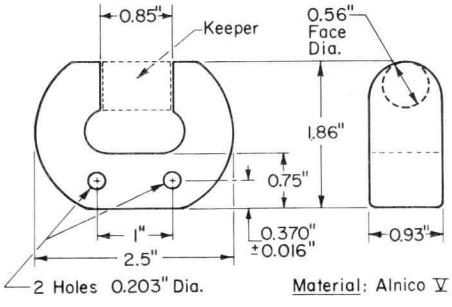

FIGURE 19

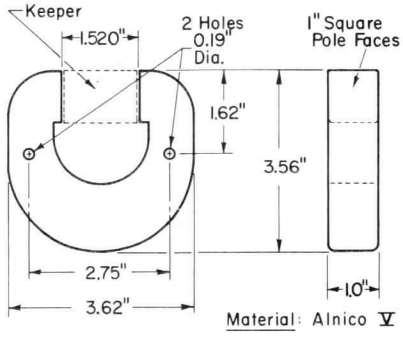

FIGURE 21

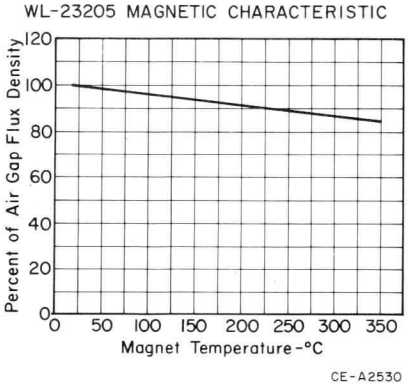

FIGURE 18

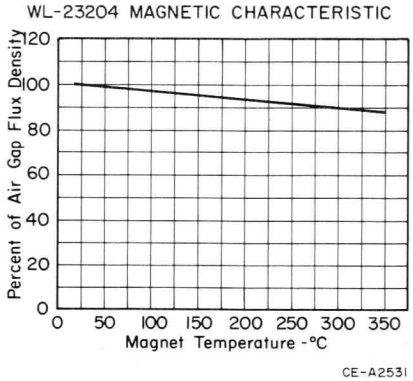

FIGURE 20

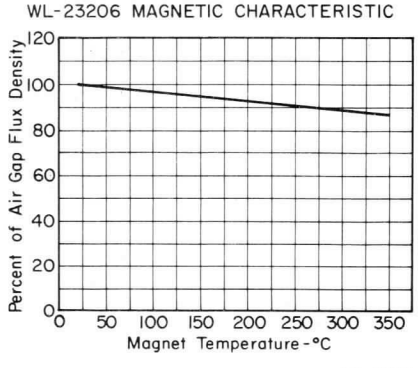

FIGURE 22

Process Ion Sorption Pumps

8 Liters/Second

Ceramic-Metal Construction
Range 10^{-4} Torr to 10^{-9} Torr

Application

The WL-23445 is an ion sorption pump with a pumping speed of 8 liters/second of dry air. The pump is used primarily as an exhaust pump for electronic tubes such as magnetrons, vidicons and high vacuum amplifiers, modulator and pulse tubes. It may also be used in a variety of other applications which require clean, dependable, pumping.

The WL-23445 has an operating pressure range from 10^{-4} torr to 10^{-9} torr. It has a maximum starting pressure of 5×10^{-4} torr. The pump operates with commercially available pump power supplies which provide an open circuit voltage of 2800 to 3600 volts d.c. and approximately 12 milliamperes at 2500 volts d.c. The pump may be baked at temperatures up to 550°C and the magnet at 200°C.

While the WL-23445 will operate satisfactorily in systems containing hydrocarbon contaminants, operation in clean systems will promote superior life and performance.

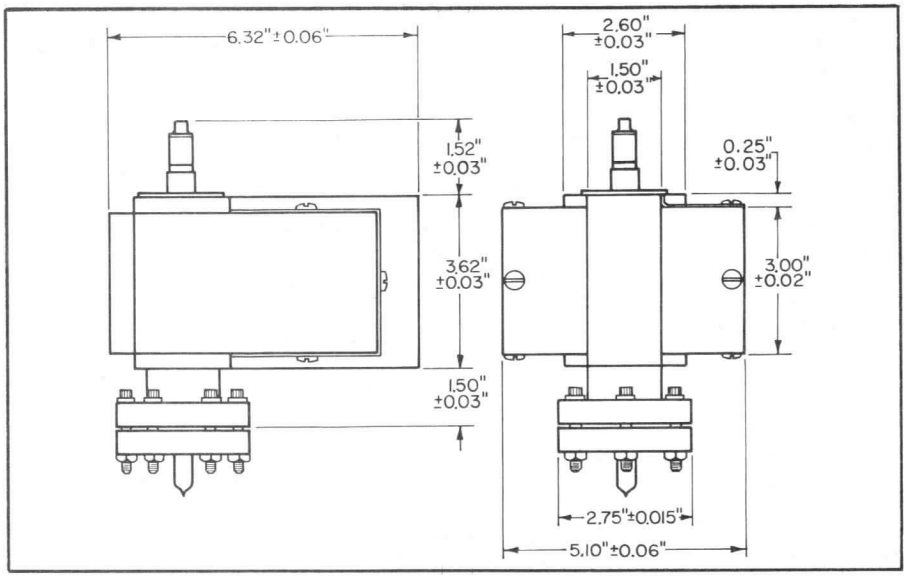

FIGURE 23

Operating Data

Weight with Magnet ..... 14 Pounds
Voltage: d.c.
  Operating ..... 2500 to 3600 Volts
  Starting ..... 2300 Volts
Power:
  Starting (Short Duration) .. 250 max. Watts
  Operating (Continuous Power) ... 50 Watts
Temperature:
  Starting (Max.) ..... 30 °C
  Operating (High Temperatures will
    Reduce Pumping Efficiency) .... 100 °C
Pressure:
  Starting (Max.) ..... 5×10^{-4} Torr
  Operating ..... 10^{-4} to 10^{-9} Torr
Current ..... See Figure 24
Magnetic Flux Density..... 1300 Gauss

Pumping Speed for Various Gases:

Dry Air	8.0 L/S
Nitrogen	8.0 L/S
Oxygen	4.6 L/S
Carbon Dioxide	7.8 L/S
Helium	0.7 L/S
Argon	0.3 L/S

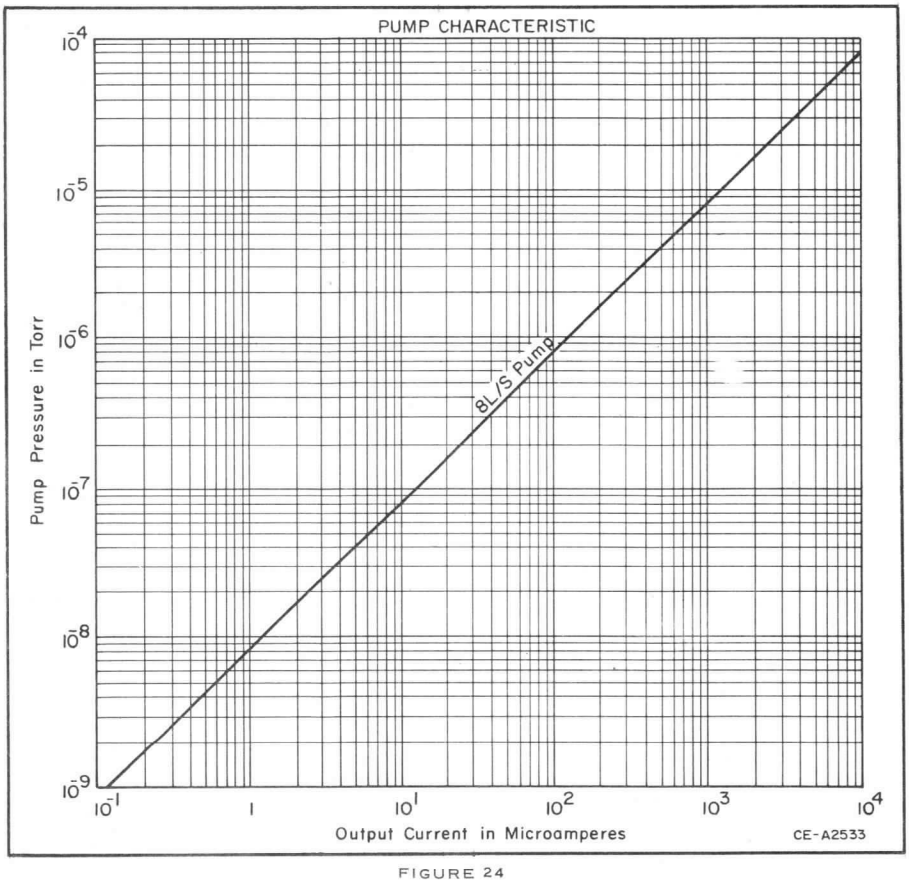

FIGURE 24

Ion Sorption Pumps

SPECIALTY PRODUCTS SALES OFFICES

STATE & CITY	ZIP CODE	ADDRESS	PHONE
ALABAMA			
Huntsville	35801	89 Holiday Office Center	(205) 881-2591
ARIZONA			
Phoenix	85004	Box 13649	(602) 254-5231
CALIFORNIA			
Compton	90224	18020 S. Santa Fe Avenue	(213) 636-0111
Los Angeles	90017	600 St. Paul Avenue	(213) 482-9660
Sunnyvale	94088	Bldg. 73, Hendy Avenue	(408) 735-2191
COLORADO			
Denver	80204	55 W. Fifth Avenue	(303) 534-8121
CONNECTICUT			
Hartford	06103	360 Market Street	(203) 249-5792
DISTRICT OF COLUMBIA			
Washington	20006	1625 K Street, N. W.	(202) 628-8843
FLORIDA			
Orlando	32814	1010 Executive Center Drive P. O. Box 20513	(305) 425-4511
GEORGIA			
Atlanta	30303	1299 Northside Drive N. W.	(404) 351-5200
ILLINOIS			
Chicago	60606	10 South Riverside Plaza	(312) 461-7040
INDIANA			
Fort Wayne	46802	Anthony Wayne Bank Bldg.	(219) 742-0221
Indianapolis	46207	1560 Stadium Drive	(317) 632-3301
MARYLAND			
Towson	21204	1055 Taylor Avenue	(301) 828-5400
MASSACHUSETTS			
Boston	02199	800 Boylston Street	(617) 542-0600
MICHIGAN			
Detroit	48232	5757 Trumbull Avenue	(313) 872-7010
Grand Rapids	49504	281 Leonard Street, N. W.	(616) 456-1531
MINNESOTA			
Minneapolis	55416	3501 S. Highway 100	(612) 927-6551
MISSOURI			
St. Louis	63101	411 N. Seventh Street	(314) 421-6911
NEW JERSEY			
E. Orange	07018	67 Evergreen Place	(201) 465-2473
NEW YORK			
Mineola	11501	1501 Franklin Avenue	(516) 248-9809
Rochester	14603	711 Exchange Street	(716) 232-4380
Syracuse	13206	4030 New Court Road	(315) 463-9581
OHIO			
Cleveland	44113	Illuminating Bldg. 55 Public Square	(216) 241-7600
Cincinnati	45237	7710 Reading Road	(513) 475-7229
Dayton	45404	1306 Farr Drive	(513) 461-3720
PENNSYLVANIA			
Bala Cynwd	19004	One Decker Square	(215) 878-1300
Pittsburgh	15230	Box 1017, Chatham Center Office Bldg.	(412) 255-3800
TEXAS			
Dallas	75247	8400 John W. Carpenter Freeway	(214) 631-2811
Houston	77002	507 Dallas Avenue	(713) 224-7791
WASHINGTON			
Seattle	98119	19 West Harrison Street	(206) 623-7001
WISCONSIN			
Milwaukee	53201	538 N. Broadway Avenue	(414) 276-1800

Westinghouse Electric Corporation
Electronic Tube Division, Elmira, N. Y. 14902
Printed in U. S. A.

VACUUM MEASURING TUBES

Vacuum measuring tubes are designed to become part of an evacuated system. With suitable circuitry, the pressure in that system may be accurately determined. The Bayard-Alpert ionization gauge is used for measurement of very low pressures. The Schulz-Phelps ionization gauge measures pressures up to one atmosphere.

These tubes are used in electron tube and semiconductor device processing control, vacuum deposition, research and rocket altimeter applications.

Ionization Gauges

TUBE TYPE	TUBE CLASS	RANGE TORR	ELECTRICAL				MECHANICAL				
			FILAMENT		COLL VOLTS	GRID VOLTS	TUBULATION		MAX. OAL (1)	MAX. DIAM.	BASE DWG.
			VOLTS	AMPS.			SIZE	MAT'L.			
WL-5966	Bayard-Alpert (2)	10^{-3} to 10^{-10}	7	2.5	—30	150	½"	Nonex	11½"	3⅛"	4VF
WL-7676	Schulz-Phelps	$5x10^{-1}$ to 10^{-5}	2	2.25	—60	60	½"	Nonex	7¼"	1 13/16"	8VP
WL-7903	Schulz-Phelps	$5x10^{-1}$ to 10^{-5}	1.3	2.4	—60	60	½"	Pyrex	7¼"	1 13/16"	9VP
WL-7904	Bayard-Alpert (2)	10^{-3} to 10^{-9}	4	1.5	—30	150	½"	Pyrex	7¼"	1 3/16"	9PV
WL-8057	Bayard-Alpert (3)	10^{-3} to 10^{-9}	7	2.5	—30	150	¾"	Nonex	5¼"	4 9/16"	5VP
WL-22612	Bayard-Alpert (2)	10^{-3} to 10^{-9}	7	2.5	—30	150	½"	Pyrex	11½"	3⅛"	4VF
WL-22613	Bayard-Alpert (2)	10^{-3} to 10^{-9}	7	2.5	—30	150	¾"	Pyrex	11½"	3¼"	4VF
WL-22614	Bayard-Alpert (2)	10^{-3} to 10^{-9}	7	2.5	—30	150	1"	Pyrex	11½"	3⅜"	4VF
WL-22618	Bayard-Alpert (2)	10^{-3} to 10^{-9}	7	2.5	—30	150	½"	Pyrex	5⅜"	5 9/16"	4VF
WL-22619	Bayard-Alpert (2)	10^{-3} to 10^{-9}	7	2.5	—30	150	¾"	Pyrex	5⅜"	5 9/16"	4VF
WL-22620	Bayard-Alpert (2)	10^{-3} to 10^{-9}	7	2.5	—30	150	1"	Pyrex	5⅜"	5 9/16"	4VF
WL-22627	Bayard-Alpert (2)	10^{-3} to 10^{-10}	7	2.5	—30	150	¾"	Pyrex	8"	2⅛"	7VP
WL-22637	Bayard-Alpert (3)	10^{-3} to 10^{-9}	7	2.5	—30	150	¾"	Pyrex	6⅜"	5 9/16"	5VP
WL-22640	Bayard-Alpert (3)	10^{-3} to 10^{-9}	7	2.5	—30	150	¾"	Kovar	6⅜"	5 1/16"	5VP
WL-22643	Bayard-Alpert (3)	10^{-3} to 10^{-9}	7	2.5	—30	150	¾"	Pyrex	8"	2⅛"	7VP
WL-22754	Bayard-Alpert (4)	10^{-3} to 10^{-9}	2.5	2.5	—30	150	¾"	Nonex	5¼"	4 9/16"	5VP
WL-22868	Bayard-Alpert (4)	10^{-3} to 10^{-9}	2.5	2.5	—30	150	¾"	Pyrex	5¼"	4 9/16"	5VP
WL-22869	Bayard-Alpert (4)	10^{-3} to 10^{-9}	2.5	2.5	—30	150	¾"	Kovar	5¼"	4 9/16"	5VP
WL-22923	Schulz-Phelps	$5x10^{-1}$ to 10^{-5}	2	2.25	—60	60	½"	Kovar	7¼"	1 13/16"	9VP
WL-22947	Bayard-Alpert (4)	10^{-3} to 10^{-9}	2.5	2.5	—30	150	¾"	Nonex	5¼"	4 9/16"	4VP
WL-22948	Bayard-Alpert (4)	10^{-3} to 10^{-9}	2.5	2.5	—30	150	¾"	Pyrex	5¼"	4 9/16"	4VP
WL-22949	Bayard-Alpert (4)	10^{-3} to 10^{-9}	2.5	2.5	—30	150	¾"	Kovar	5¼"	4 9/16"	4VP

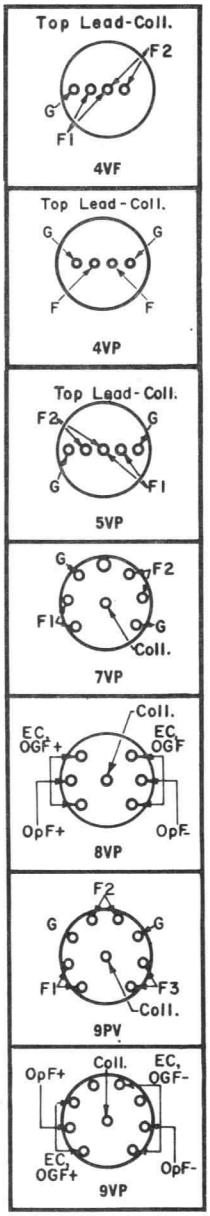

Notes

1. Excluding flexible leads. Length and diameter describe space to contain tube.
2. Grid outgassed by electron bombardment.
3. Grid outgassed by a-c current conduction.
4. Non-burn-out filament and grid outgassed by a-c current conduction.

Pirani Tubes

TUBE TYPE	FILAMENT		TUBULATION		RANGE TORR	MAX. OAL	MAX. DIAM.	BASE DWG.
	MAT'L.	AMPS.	SIZE	GLASS				
WL-762	Platinum	0 to 0.3	⅜"	Nonex	1 to $5x10^{-4}$	7 15/16"	1 1/16"	4A
WL-765	Platinum	0 to 0.3	⅝"	Nonex	1 to $5x10^{-4}$	6¾"	1 1/16"	4A
WL-765A	Platinum	0 to 0.3	None	None	1 to $5x10^{-4}$	5¼"	1 1/16"	4A

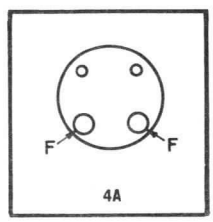

March 1, 1961

PIRANI GAUGE TUBE TYPES 762 AND 765A

The types 762 and 765A are monodes designed for service in pressure measuring equipment using Pirani gauge tubes in a bridge circuit. They are electrically identical and differ mechanically in that type 765A has no tubulation and is supplied exhausted to a standard vacuum.

MECHANICAL:

Type of Cooling	Free Air Convection
Tubulation:	
Type 762	3/8", Nonex (Corning Code 7720)
Type 765A	None
Bulb Glass	Nonex (Corning Code 7720)
Net Weight (Approx.)	2 Ounces
Shipping Weight	1 Pound

ELECTRICAL:

Filament	Platinum Ribbon
Filament Current	0 to 0.3 Ampere
Filament Resistance (Approx. at 25°C)	43 Ohms
Filament Temperature Coefficient per °C	0.003
Filament Operating Temperature (Max.)	400 °C

762
OUTLINE

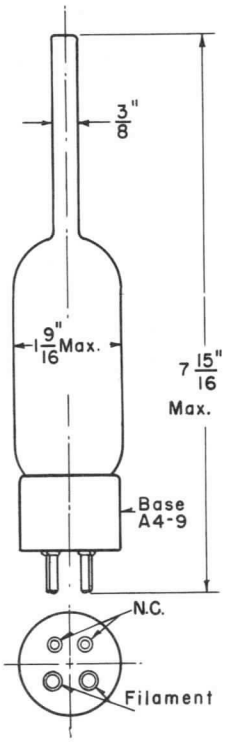

765A
OUTLINE

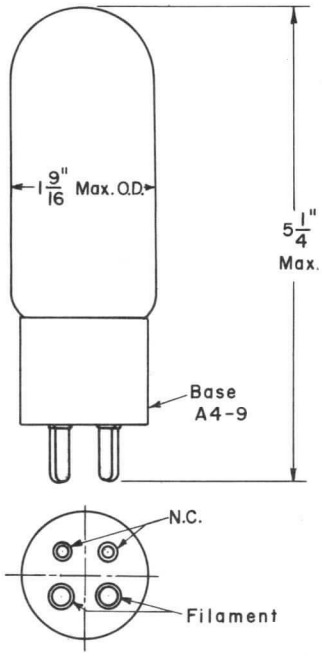

PRINCIPLE OF OPERATION

Pressure indicating tube types 762 and 765A are used in measurement of low pressures in vacuum systems. The platinum ribbon filament within the tube does not oxidize when heated in air or incompletely exhausted vacuum systems. This filament cools less with reduced pressure and consequently increases in resistance. The changes may be measured conveniently on a Wheatstone bridge circuit in which two of the bridge arms consist of the gauge tubes. The type 762 is connected to the vacuum system to be measured and the type 765A is used in the other arm to provide temperature compensation. The tubulation may be sealed to the manifold of the vacuum system by a nonex glass or graduated glass seal, or connected to it by a short piece of rubber tubing.

TYPICAL CIRCUITS

A typical circuit is shown in Figure 1. The arms R1 and R2 of the bridge circuit each consist of 10 ohms of non-inductively wound wire such as Manganin, Advance, or Constantin having a low temperature coefficient. The power supply is connected through a small adjustable resistor R3 in order to compensate for any difference in the 762 tube and 765A tube which comprise the other two arms of the bridge. Resistor R3 once adjusted need not be changed unless there is a change in the tubes. A Westinghouse Type DX meter with a resistance of 5 ± 0.1 ohms and a range of 0-10 milliamperes may be used in the circuit and should be protected with a fuse F1. Power maybe supplied by a voltage regulated, d-c supply. A voltage divider is used for obtaining the desired bridge voltage of 12 volts for measuring pressures of 250 microns or more, and 6 volts for lower pressures.

USE OF EQUIPMENT

The apparatus may be set up and balanced with the 762 tube connected to the exhaust system to be measured. As gauge tube is exhausted, there is less cooling of the filament by the convection currents within the bulb, and the resistance increases, thus unbalancing the circuit and giving a reading on the meter. For reading low pressures, the bridge is balanced when gauge tube is exhausted to desired pressure. As gauge tube is subsequently exhausted, its resistance will tend to balance the bridge. More sensitive reading of low pressure is thus obtained.

For a given range of pressures, the arrangement shown in Figure 2 will give satisfactory results. Here the 765A tube is replaced by an adjustable resistance R4. This resistor may be set to balance the 762 tube at when open to the atmosphere so that as the system is evacuated the balance is disturbed and the reading on the meter increases. Also, the resistor may be set to balance the 762 tube when the system is evacuated. Under these conditions the meter reading decreases as the vacuum improves. The scale of the meter may be calibrated to read in millimeters or microns of mercury pressure and thus will indicate the pressure directly. The gauge tubes should not be exposed to light or to varying temperatures while in use and should preferably be mounted in a light tight box. Connections from the tubes to the exhaust system should be short in order to avoid errors due to long tubing.

TYPICAL OPERATING CIRCUITS

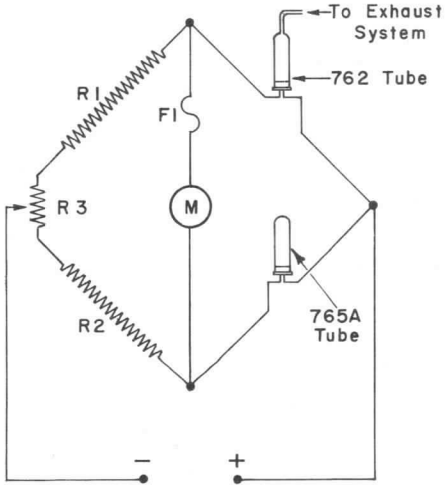

FIGURE 1

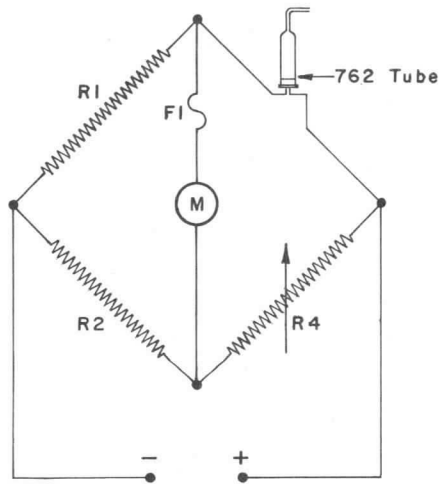

FIGURE 2

LOW PRESSURE ION GAUGE TUBE TYPE WL-5966

The WL-5966 is an ionization type of vacuum-gauge tube for measurement of gas pressures as low as 10^{-10} Torr. The tube has a hard glass bulb with a one-half inch diameter tubulation. The WL-5966 employs an electrode structure having a minimum of metal surface with the result that the tube is easily out-gassed.

The WL-5966 is a triode of the Bayard-Alpert inverted geometry design having two tungsten filaments, one of which is a spare. The grid structure is operated at a positive potential with respect to the filament while the ion collector is at a negative potential. Electrons are accelerated from the filament to the grid; they bombard and ionize gas molecules, and the resultant positive ions are attracted to the collector. The ratio of the collector current (positive ion current) to the grid current is proportional to the gas pressure.

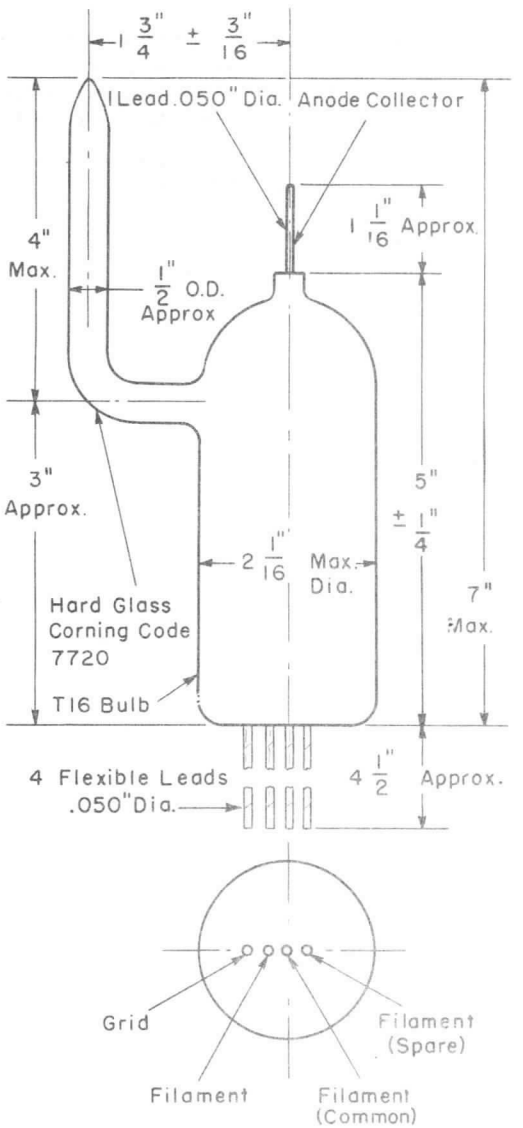

CE-A531 R2

ELECTRICAL:

Filament Type (Note 1)	Tungsten
Operating Filament Voltage (Approx.)	7 ac or dc Volts
Operating Filament Current	2.5 ± 8% Amperes

MECHANICAL:

Maximum Tube Length (including tubulation)	11-1/2"
Maximum Tube Radius	2-3/16"
Maximum Bulb Length	5-3/8"
Maximum Bulb Diameter	2-1/16"
Tubulation (Note 3)	1/2" (Approx.) Diameter Hard Glass Corning Code 7720
Mounting Position	Vertical

MAXIMUM RATINGS:

Absolute Maximum Values

Ion Collector Voltage	−100	max.	Volts
Grid Voltage	+500	max.	Volts
Ambient Temperature	100	max.	°C
Gas Pressure	0.001	max.	mm Hg
Filament Voltage (Note 2)	10	max.	Volts
Emission Current	200	max.	Ma.

TYPICAL OPERATION:

Ion Collector Voltage	−30	Volts
Grid Voltage	+150	Volts
Grid Current	10	Ma.
Sensitivity	1 μa./10^{-5}	Torr

CONDITIONS FOR OUTGASSING ELEMENTS:

Ion Collector	Connected to Grid		
Grid Voltage	+500	max.	Volts
Filament (Note 2), Series	20	max.	Volts
Parallel	10	max.	Volts
Grid & Collector Power	100	max.	Watts

NOTES

1. The WL-5966 has two filaments, both of which should be used during outgassing cycles. During pressure measuring operation only one filament need be used. The voltage and current values are for either filament operated alone.
2. If it is necessary to outgas the tube using one filament only, the voltage must not exceed 11V. Shorter life must be expected under these conditions.
3. Other ion gauges, similar to type WL-5966 but having different sizes and materials of tubulation, are available under different numbers.

APPLICATION

The basic principle of the ionization gauge is described briefly in the introduction, where mention was made of the ratio of collector current to grid current as a measure of gas pressure. In order to measure gas pressure with an ionization gauge tube, the current ratio or some proportional quantity must be observed. If the grid current is held constant, then gas pressure will be proportional to collector current. The accuracy of pressure values is, then, dependent on the stability of grid current. The grid current is reasonably independent of grid voltage for grid voltages above that corresponding to the maximum probability of ionization of any gas which may be present. A grid voltage of 150 volts is sufficient, and stability is increased by the use of a voltage regulator tube (0D3).

The collector voltage must be sufficiently negative to attract all positive ions. This value is not critical: in practice, a voltage of –22.5 or greater will be satisfactory.

Ionization gauge tubes are commonly operated temperature limited. Consequently, the grid current at a fixed grid voltage is a first order function of filament temperature. This effect provides a convenient means of controlling grid current, i.e., by control of filament voltage.

Outgassing of metal and glass parts can be accomplished conveniently by connecting grid and collector together and passing a high current through the tube. The voltage applied to the grid and collector should not exceed +500 volts and maximum outgas power is 100 watts. DC supply is recommended for outgassing, although line-frequency supply has been used successfully. The two units of the filament may be operated either in series or parallel. Emission current is adjusted by increasing the filament voltage until the desired outgassing condition is reached. Although the elements may be outgassed using only one filament, due to the higher operating temperature required to produce the necessary outgassing current, tungsten evaporation is rapid and seriously impairs the life of the tube. Consequently outgassing using both filaments is strongly recommended.

To facilitate outgassing, the following schedule should be followed, especially during the first outgassing of a new tube or after a tube has been exposed to air.

Starting at 25 mA raise the bombarding current in 25 mA steps to maximum desired current. Each step should be 5 minutes minimum and the tube should be switched off for 1 minute between steps. At no time should the filament voltage exceed the maximum allowed.

The filament should never be heated in air; therefore, it is desirable to employ a thermo-couple or Pirani gauge coupled to a relay system to prevent excitation of the tube until the gas pressure has been reduced to 1×10^{-3} Torr.

The information contained herein is supplied without assuming responsibility for infringement of patents or other rights of third parties which may result from its use. No license is granted by implication or otherwise under any patent or patent rights of Westinghouse Electric Corporation.

February 1, 1965

HIGH PRESSURE ION GAUGE TYPE WL-7676

The WL-7676 is a three electrode ionization type vacuum gauge designed to measure gas pressures in the range of 1×10^{-5} to 5×10^{-1} mm Hg. The operating filament is a thoria coated iridium wire. Filament burnout will not occur if the tube is accidentally let down to air during operation. The ion collector is a flat plate parallel to the operating filament. The other electrode, which is used as an electron emitter during outgassing and as an electron collector during operation, is a tungsten ribbon parallel to the ion collector on the opposite side of the operating filament.

ELECTRICAL:

Outgassing:
- Cathode . . . . . Tungsten Ribbon Filament
- Filament:
  - Voltage (ac or dc), approx. . . . . 5 Volts
  - Current, approx. . . . . 13 Amperes

Operating:
- Cathode . . . . . Thoria Coated Iridium Filament
- Filament:
  - Voltage approx. . . . . 2.0 Volts
  - Current at 1×10^{-5} mm Hg, approx. . . . . 2.25 Amperes

MECHANICAL:

- Type of Cooling . . . . . Air
- Tubulation:
  - Glass . . . . . Pyrex, Code 7740
  - Size . . . . . ½" Diameter
- Mounting Position . . . . . Any

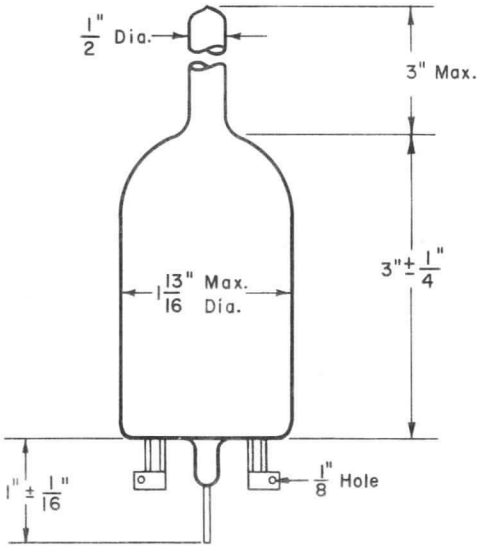

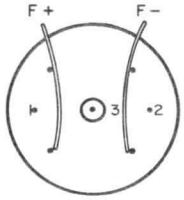

OUTGASSING

Electrode	Terminal
Outgas Filament (+)	F+
Outgas Filament (−)	F−
Collector	3
Tie Lead 1 or 2 to F+ or F−	

OPERATING

Electrode	Terminal
Operate Filament (+)	1
Operate Filament (−)	2
Ion Collector	3
Electron Collector	F+ or F−

MAXIMUM RATINGS:

Absolute Maximum Values

Outgassing: (DC voltages are with respect to Outgas-Filament-Electron-Collector Electrode)

Ion collector Voltage	500 max.	Volts
Ion Collector DC Power Input	15 max.	Watts
Filament Voltage (ac or dc)	5.5 max.	Volts
Ambient Temperature	100 max.	°C

Operating: (DC voltages are with respect to Operate Filament)

Ion Collector Voltage	+65 max.	Volts
Outgas-Filament-Electron-Collector Electrode Voltage	−65 max.	Volts
Filament Voltage (ac or dc)	2.0 max.	Volts
Ambient Temperature	100 max.	°C
Gas Pressure	1 max.	mm Hg

OUTGASSING CONDITIONS

Ion Collector Voltage with respect to Outgas-Filament-Electron-Collector Electrode	+300	Volts
Operate-Filament★	Connected to Outgas-Filament-Electron-Collector-Electrode	
Outgas-Filament:		
Voltage (ac or dc), approx.	5.0	Volts
Current, approx.	13	Amperes

OPERATING CONDITIONS

Ion Collector Voltage with respect to Operate-Filament	−60	Volts
Outgas-Filament-Electron-Collector Electrode Voltage with respect to Operate Filament	+60	Volts
Operate-Filament Conditions for 50 Microamperes Electron Current:		
Voltage (ac or dc)		
At 1×10^{-4} mm Hg, approx.	1.1	Volts
At 5×10^{-1} mm Hg, approx.	1.8	Volts
Electron Current:		
From 1×10^{-4} to 1×10^{-2} mm Hg	1	Ma.
From 1×10^{-3} to 1×10^{-1} mm Hg	50	μA.
From 1×10^{-2} to Saturation	10	μA.
Sensitivity with Nitrogen $S = (i+ / i-) \times (1/P)$	0.4	$(\text{mm Hg})^{-1}$
Pressure Measuring Range with Nitrogen (See Figure 1)	1×10^{-4} to 6×10^{-1}	mm Hg

★ Voltage must not be applied across operate filament during outgassing.

AVERAGE ION CURRENT TRANSFER CHARACTERISTICS

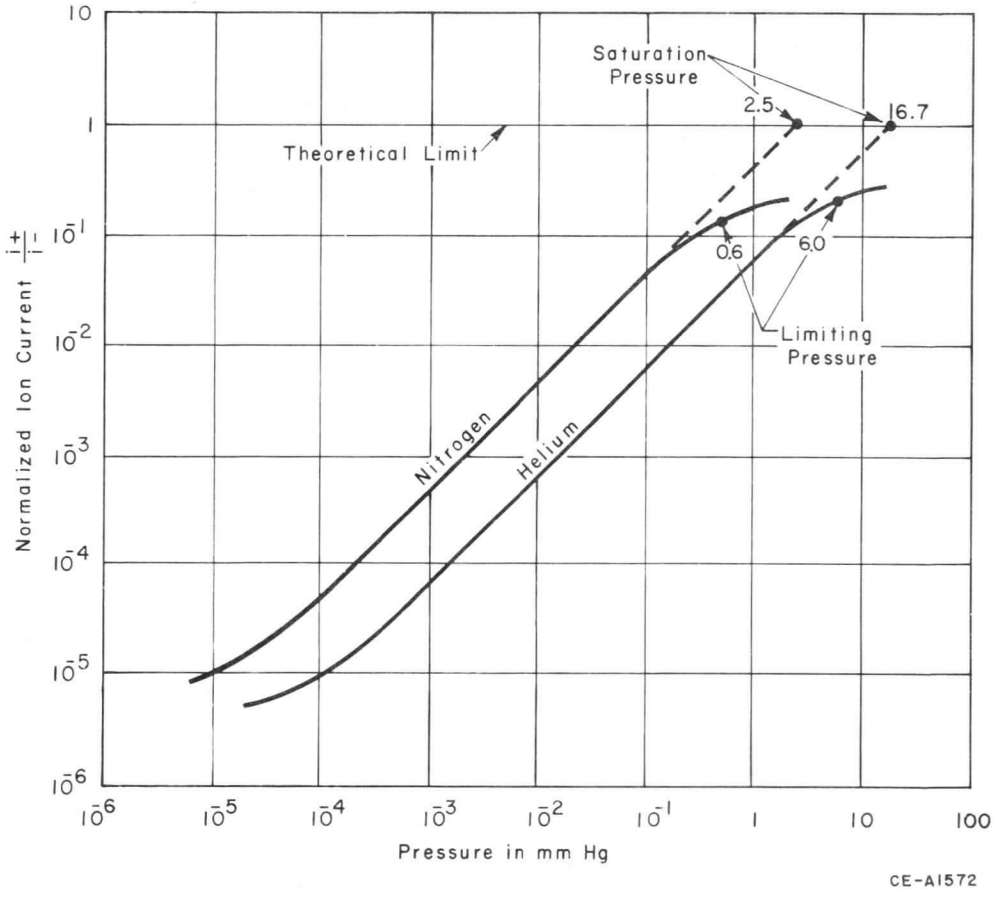

FIGURE 1

GAUGE CHARACTERISTICS FOR DIFFERENT GASSES

	N_2	CO	He	H_2
Sensitivity in $(mmHg)^{-1}$	0.4	0.42	0.06	0.21
Saturation Pressure in mmHg	2.5	2.6	16.7	4.8
Limiting Pressure in mmHg	0.6	0.6	6.0	0.6

APPLICATION DATA

The circuitry for operation of the tube consists of suitable 60 V DC. power supplies for each collecting electrode and a variable voltage filament supply. A meter with ranges from 10^{-5} to 10^{-3} ampere is required for measuring electron current and a sensitive microammeter with ranges from 10^{-8} to 10^{-5} amperes is required in the ion collector circuit. The filament power required is 2 volts at 2.5 amperes for operation and 5.5 volts at 13 amperes for outgassing. A circuit incorporating these features is shown in Figure 2. In this circuit, a 300 volt, 100 milliampere stabilized power supply is used.

For outgassing the full 300 V is used, the outgassing current being set by the outgassing filament temperature. The outgas filament voltage is adjusted by a variable auto-transformer.

During operation, the operating filament is connected to the center of a resistance chain across the power supply. The electron collector and ion collector are connected to potentiometers in the resistance chain, so that the ion collector is approximately 60 volts negative, and the electron collector approximately 60 volts positive with respect to the operate filament. The operate filament supply is controlled by a variable auto-transformer, with a series variable resistance which acts as a fine control.

ION GAUGE POWER SUPPLY

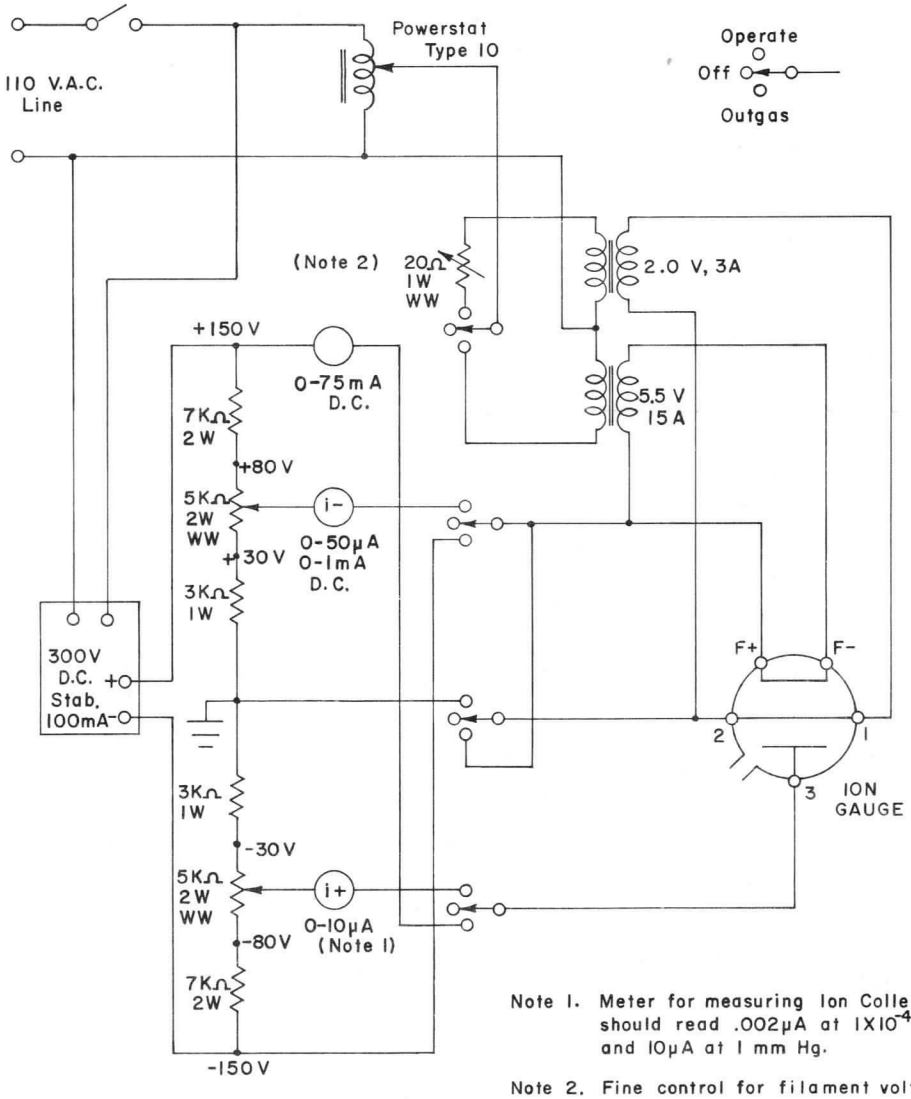

Note 1. Meter for measuring Ion Collector should read .002μA at $1X10^{-4}$ mm Hg. and 10μA at 1 mm Hg.

Note 2. Fine control for filament voltage will give 2% variation.

CE-B1577

FIGURE 2

Since pressures over a wide range are to be covered, the cooling effect by the residual gas on the filament can be considerable, resulting in changes in electron current. An operate circuit with an automatic filament control, in which a change in electron current will be compensated by a change in filament voltage, is shown in Figure 3.

AUTOMATIC CONTROL CIRCUIT

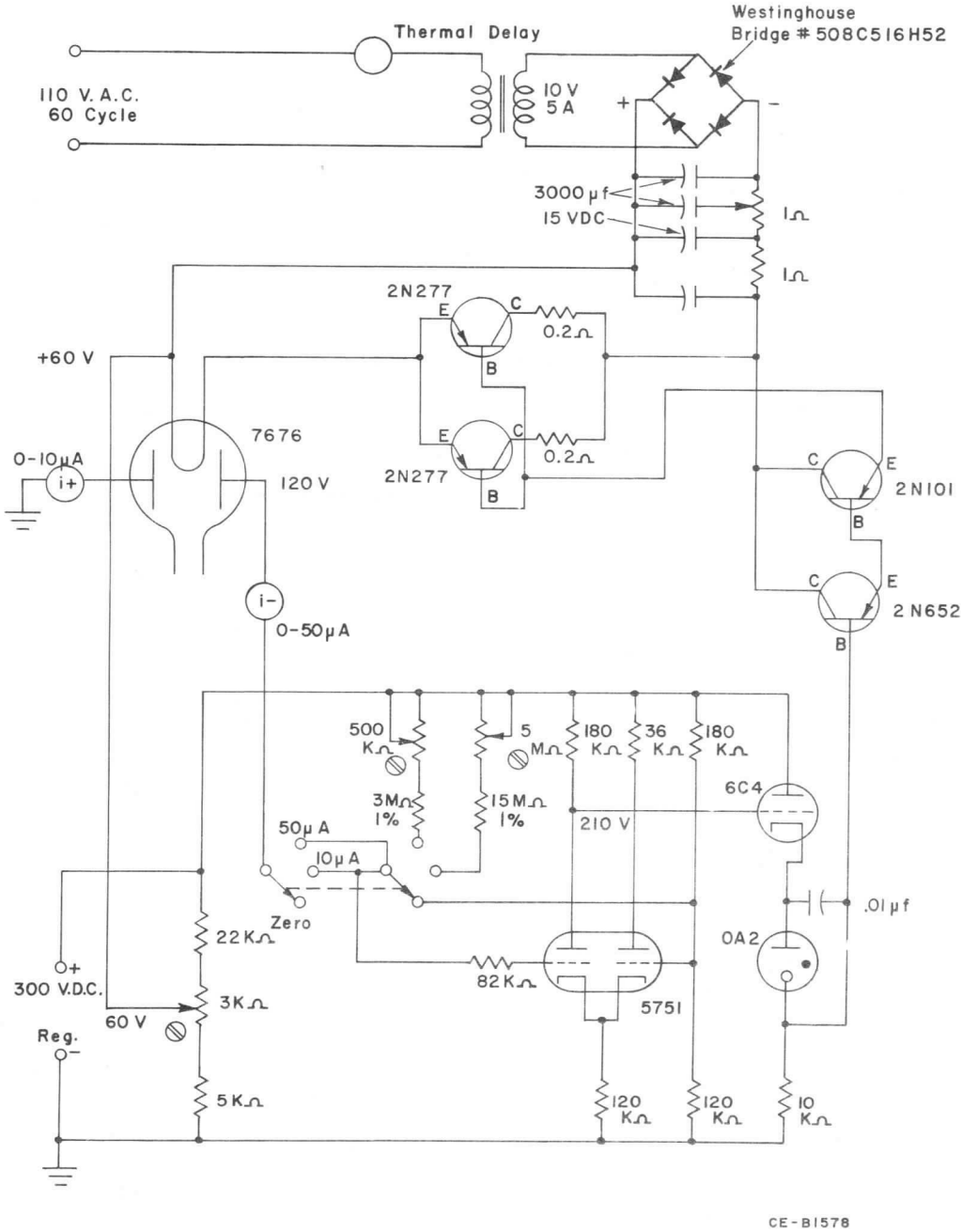

FIGURE 3

The information contained herein is supplied without assuming responsibility for infringement of patents or other rights of third parties which may result from its use. No license is granted by implication or otherwise under any patent or patent rights of Westinghouse Electric Corporation.

Westinghouse

WL-7903

February 1, 1962

HIGH PRESSURE ION GAUGE TYPE WL-7903

The WL-7903 is a small, three-electrode ionization type vacuum gauge designed to measure gas pressures in the range of 1×10^{-5} to 5×10^{-1} mm Hg. The operating filament is a thoria coated iridium wire. Filament burnout will not occur if the tube is accidentally let down to air during operation. The ion collector is a flat plate parallel to the operating filament. The electron collector is a flat plate parallel to the ion collector on the opposite side of the operating filament. The electron collector support wires are tungsten and serve as electron emitters during outgassing.

ELECTRICAL:

Outgassing:		
Cathode	Tungsten Filaments	
Filament:		
Voltage (ac or dc) Approx.	3.6	Volts
Current	13	Amperes
Operating:		
Cathode	Thoria Coated Iridium Filament	
Filament:		
Voltage	1.3	Volts
Current at 1×10^{-5} mm Hg	2.4	Amperes

MECHANICAL:

Type of Cooling	Air
Tubulation: (Note 1)	
Glass	Pyrex, Corning Code 7740
Size	½" Diameter
Mounting Position	Any

MAXIMUM RATINGS:

Absolute Maximum Values

Outgassing: (DC Voltages are with Respect to Outgas-Filament-Electron-Collector Electrode).

Ion Collector Voltage	400	max.	Volts
Ion Collector DC Power Input	12	max.	Watts
Filament Voltage (ac or dc)	4	max.	Volts
Ambient Temperature	100	max.	°C

Operating: (DC Voltages are with Respect to Operate Filament)

Ion Collector Voltage	+65	max.	Volts
Outgas-Filament-Electron-Collector Electrode Voltage	−65	max.	Volts
Filament Voltage (ac or dc)	1.5	max.	Volts
Ambient Temperature	100	max.	°C
Gas Pressure	1	max.	mm Hg

INDEX OF TERMINALS

1. Electron Collector & Outgas Filament #1
2. Operate Filament #1
3. Electron Collector & Outgas Filament #1
4. No Connection.
5. Electron Collector & Outgas Filament #2
6. No Connection.
7. Operate Filament #2
8. Electron Collector & Outgas Filament #2
9. Short Index Pin
10. Ion Collector

Note: Both leads of each terminal of Outgas Filament should be used during outgassing to prevent damage to the tube.

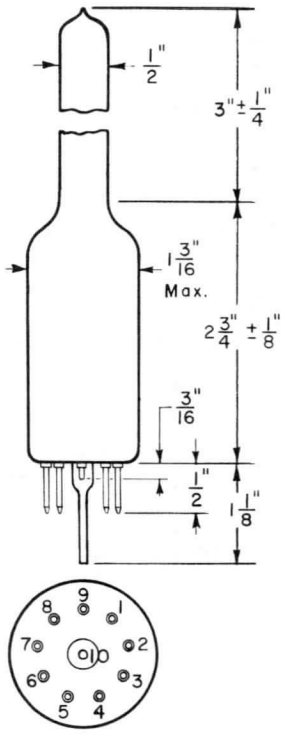

OPERATING CONDITIONS

Ion Collector Voltage with Respect to Operate-Filament	−60	Volts
Outgas-Filament-Electron-Collector Electrode Voltage with Respect to Operate Filament	+60	Volts
Operate-Filament Conditions for 50 Microamperes Electron Current:		
Voltage (ac or dc) At 1×10^{-4} mm Hg	1.3	Volts
Electron Current:		
From 1×10^{-4} to 1×10^{-2} mm Hg	1	Ma.
From 1×10^{-3} to 1×10^{-1} mm Hg	50	μA.
From 1×10^{-2} to Saturation	10	μA.
Sensitivity with Nitrogen $S = (i+ / i-) \times (1/P)$	0.4	$(\text{mm Hg})^{-1}$
Pressure Measuring Range with Nitrogen (See Figure 1)	1×10^{-4} to 6×10^{-1}	mm Hg

OUTGASSING CONDITIONS

Ion Collector Voltage with Respect to Outgas-Filament-Electron Collector Electrode	+300	Volts
Operate-Filament (Note 2)	Connected to Outgas-Filament-Electron-Collector-Electrode	
Outgas-Filament:		
Voltage (ac or dc)	3.6	Volts
Current	13	Amperes

NOTES

1. Other ion gauges, similar to type 7903 but having different sizes and materials of tubulation, are available under different numbers.
2. Voltage must not be applied across operate filament during outgassing.

AVERAGE ION CURRENT TRANSFER CHARACTERISTICS

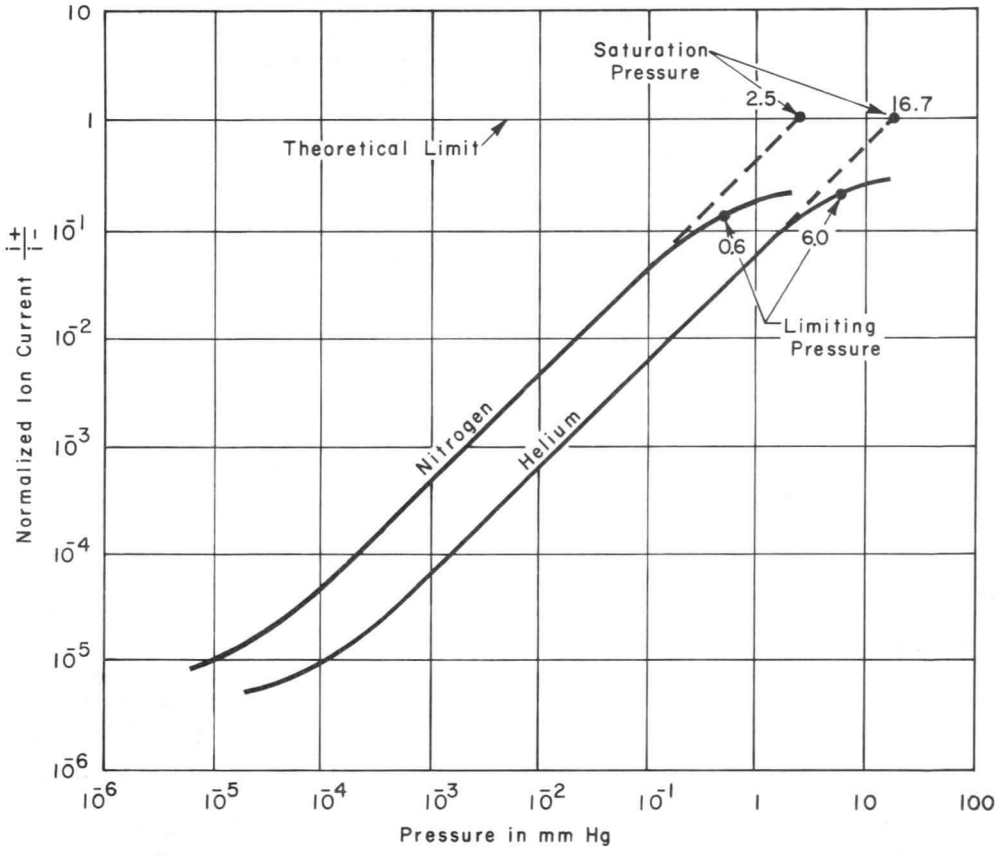

FIGURE 1

GAUGE CHARACTERISTICS FOR DIFFERENT GASSES

	N_2	CO	He	H_2
Sensitivity in $(mmHg)^{-1}$	0.4	0.42	0.06	0.21
Saturation Pressure in mmHg	2.5	2.6	16.7	4.8
Limiting Pressure in mmHg	0.6	0.6	6.0	0.6

APPLICATION DATA

The circuitry for operation of the tube consists of suitable 60 V DC power supplies for each collecting electrode and a variable voltage filament supply. A meter with ranges from 10^{-5} to 10^{-3} ampere is required for measuring electron current and a sensitive microammeter with ranges from 10^{-8} to 10^{-5} amperes is required in the ion collector circuit. The filament power required is 2 volts at 2.5 amperes for operation and 5.5 volts at 13 amperes for outgassing. A circuit incorporating these features is shown in Figure 2. In this circuit, a 300 volt, 100 milliampere stabilized power supply is used.

For outgassing the full 300 V is used, the outgassing current being set by the outgassing filament temperature. The outgas filament voltage is adjusted by a variable auto-transformer.

During operation, the operating filament is connected to the center of a resistance chain across the power supply. The electron collector and ion collector are connected to potentiometers in the resistance chain, so that the ion collector is approximately 60 volts negative, and the electron collector approximately 60 volts positive with respect to the operate filament. The operate filament supply is controlled by a variable auto-transformer, with a series variable resistance which acts as a fine control.

Pressures over a wide range are covered. The cooling effect by the residual gas on the filament is considerable, resulting in changes in electron current. An operate circuit with an automatic filament control, in which a change in electron current is compensated by a change in filament voltage, is desirable as it permits continuous monitoring of pressure.

ION GAUGE POWER SUPPLY

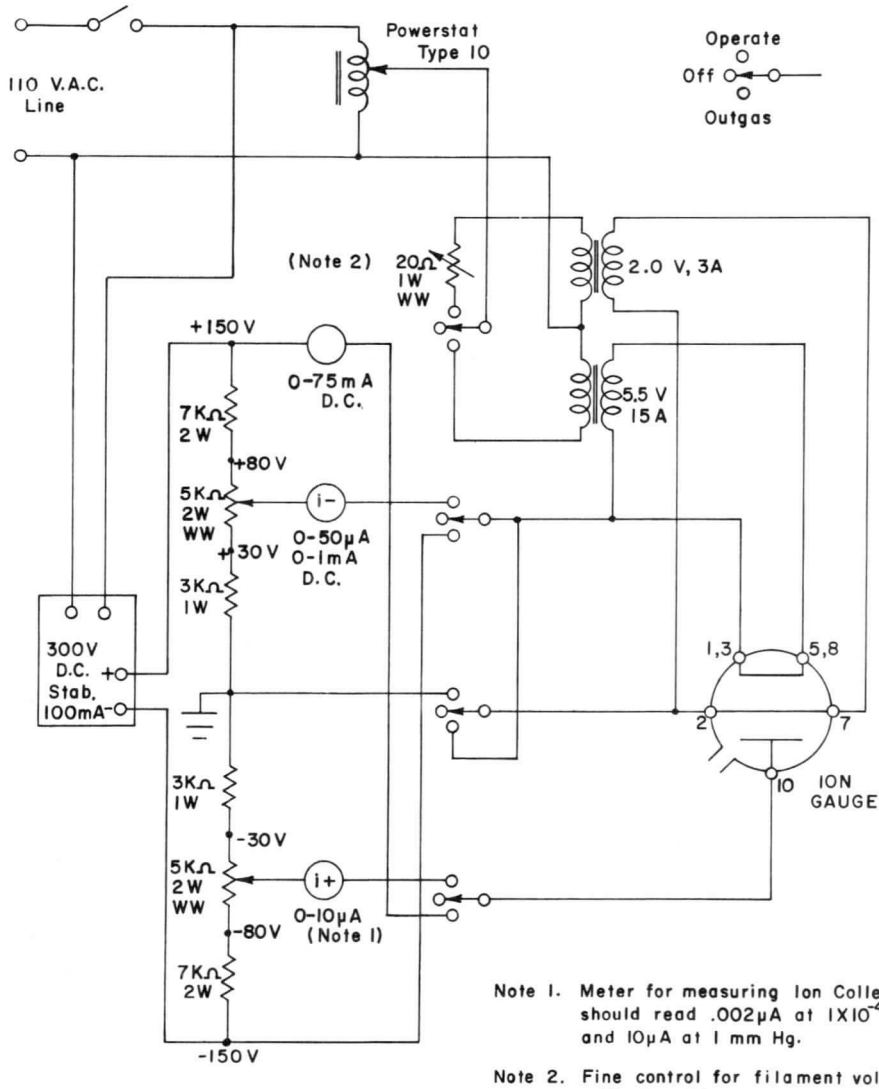

Note 1. Meter for measuring Ion Collector should read .002μA at $1X10^{-4}$ mm Hg. and 10μA at 1 mm Hg.

Note 2. Fine control for filament voltage will give 2% variation.

CE-B1719

FIGURE 2

IONIZATION GAUGE TUBE TYPE 7904

The 7904 is an ionization type vacuum gauge for measurement of gas pressure in the range from 1×10^{-3} to 1×10^{-9} mm of mercury. The tube has a hard glass bulb with a one-half inch diameter pyrex tubulation.

The 7904 is a triode of the Bayard-Alpert inverted geometry design with three tungsten filaments. The filaments may be operated one at a time with two spares, two filaments in series or parallel with one spare, or three filaments in parallel. The grid structure is operated at a positive potential with respect to the filament while the ion collector is at a negative potential. As electrons are accelerated from the filament to the grid, they bombard and ionize gas molecules, and the resultant positive ions are attracted to the collector. The ratio of the collector current to the grid current is proportional to the gas pressure.

Outgassing of metal and glass parts is accomplished by connecting grid and collector together and passing a high current through the tube. Sufficient emission current for outgassing is obtained by adjusting filament voltage.

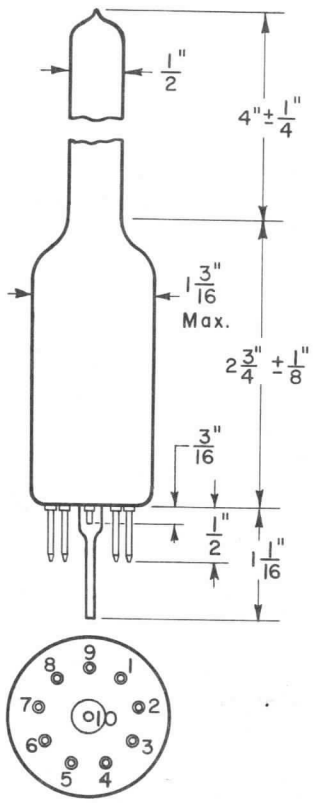

INDEX TO TERMINALS

1. Filament 1
2. Filament Common
3. Grid
4. Filament 2
5. Filament Common
6. Grid
7. Filament 3
8. Filament Common
9. Short Index Pin (NC)
10. Collector

ELECTRICAL:

Filament Material	Tungsten	
Filament:		
Voltage (ac or dc) (Approx.)	4	Volts
Current	1.5	Amperes

MECHANICAL:

Cooling Method	Free Air Convection
Bulb Diameter	1-3/16 Max.
Tubulation: (Note 1)	
Glass	Pyrex Corning Code 7740
Size	1/2" Diameter
Mounting Position	Vertical

MAXIMUM RATINGS:

Absolute Maximum Values

Ion Collector Voltage	−100	max.	Volts
Grid Voltage	+500	max.	Volts
Ambient Temperature	100	max.	°C
Gas Pressure (Power Applied)	1×10^{-3}	max.	mm Hg.

TYPICAL OPERATION: (Note 2)

Ion Collector Voltage	−30	Volts
Grid Voltage	+150	Volts
Grid Current	10	Ma.
Sensitivity	$1\ \mu a/10^{-5}$	mm Hg.

CONDITIONS FOR OUTGASSING ELEMENTS:

Ion Collector	Connected to Grid		
Grid Voltage	+500	max.	Volts
Filament:			
Series (Two Filaments)	10	max.	Volts
Parallel	5	max.	Volts
Grid and Collector Power	30	max.	Watts

1. Other ion gauges, similar to type 7904 but having different sizes and materials of tubulation, are available under different numbers.

2. The type 7904 is similar in construction to the type 5966. For a detailed description of the operation and application of Bayard-Alpert ion gauges, refer to 5966 data sheet.

Figure 1 is an example of a control circuit, using a thermocouple gauge, which prevents application of power to ion gauge when pressure is too high. Figure 2 is a simple ion gauge power supply which requires an adjustment every time a pressure reading is taken.

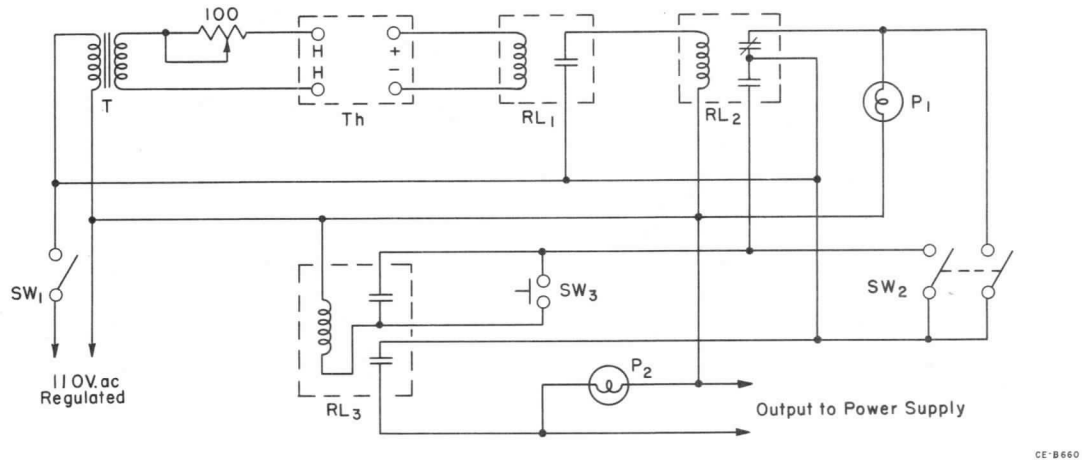

FIGURE 1

Resistor value in ohms

Th – Thermocouple: Type 7677 or equivalent
RL_1 – Sensitrol or equivalent
RL_2 – Weston 712 relay or equivalent
RL_3 – 115-volt relay
P_1 – 115-volt pilot lamp, red
P_2 – 115-volt pilot lamp, green
SW_1 – Switch
SW_2 – DPST switch
SW_3 – Manual start-reset (normally open push button)
T – Transformer: 110v primary; 6.3v, 1a. secondary

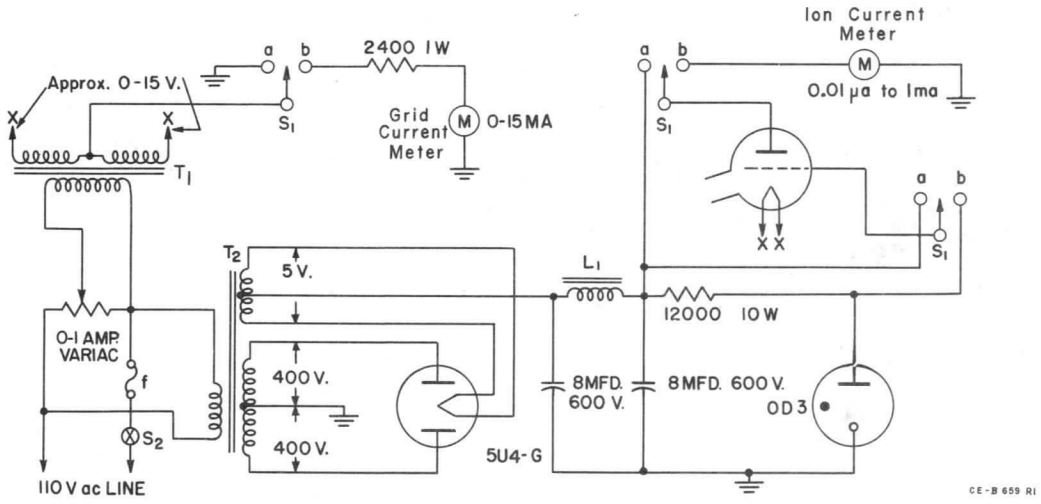

FIGURE 2

Resistor value in ohms

L_1 – Stancor C-1721 or equivalent
T_1 – UTC S70 or equivalent
T_2 – Stancor PM8412 or equivalent
S_1 – 3PDT switch (position a to outgas, position b to operate)

LOW PRESSURE ION GAUGE TUBE TYPE WL-8057

The WL-8057 is an ionization type of vacuum-gauge tube for measurement of gas pressure as low as 10^{-9} mm of mercury. The tube has a hard glass bulb with a 3/4 inch diameter tubulation. The WL-8057 employs a Bayard-Alpert electrode structure having a minimum of metal surface for ease of out-gassing.

The WL-8057 is a triode having two tungsten filaments which may be operated singly, in series, or in parallel. The helical grid structure is made of non-sag tungsten and is easily outgassed by connecting it directly to a suitable A-C or D-C supply.

The grid structure is operated at a positive potential with respect to the filament while the ion collector is at a negative potential. Electrons are accelerated from the filament to the grid; they bombard and ionize gas molecules, and the resultant positive ions are attracted to the collector. The ratio of the collector current (positive ion current) to the grid current is proportional to the gas pressure.

ELECTRICAL:

Filament Type	Tungsten
Filament Voltage (1 Filament)	Approx. 7 AC or DC Volts
Filament Current (1 Filament)	2.5 ± 8% Amperes

MECHANICAL:

Maximum Tube Length	6-1/4"
Maximum Bulb Diameter	2-1/16
Tubulation:	
Size	3/4 Inch
Material	Nonex (Coming Code 7720)
Mounting Position	Vertical

MAXIMUM RATINGS:

Absolute Maximum Values

Ion Collector Voltage	−100	max.	Volts
Grid Voltage	+500	max.	Volts
Ambient Temperature	100	max.	°C
Gas Pressure	0.001	max.	mm Hg.

Typical Operation:

Ion Collector Voltage	−30	Volts
Grid Voltage	+150	Volts
Grid Current	10	Ma.
Sensitivity	1μa/10^{-5}	mm Hg.

Conditions For Outgassing Grid:

Grid Voltage	Approx.	6 to 7	Volts
Grid Current	Approx.	9 to 10	Amperes

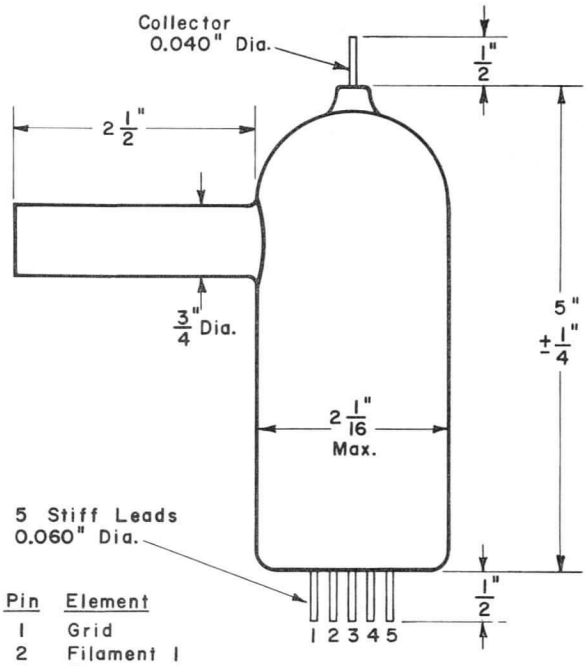

Pin	Element
1	Grid
2	Filament 1
3	Filament Common
4	Filament 2
5	Grid

The information contained herein is supplied without assuming responsibility for infringement of patents or other rights of third parties which may result from its use. No license is granted by implication or otherwise under any patent or patent rights of Westinghouse Electric Corporation.

LOW PRESSURE ION GAUGE TUBE TYPE WL-22619

The WL-22619 is an ionization type of vacuum-gauge tube for measurement of gas pressures from 10^{-3} to 10^{-9} mm of mercury. The tube has a hard glass bulb with a 3/4 inch diameter tubulation. The tube employs an electrode structure having a minimum of metal surface with the result that the tube is easily out-gassed.

The WL-22619 is a triode of the Bayard-Alpert inverted geometry design having two tungsten filaments, one of which is a spare. The grid structure is operated at a positive potential with respect to the filament while the ion collector is at a negative potential. Electrons are accelerated from the filament to the grid; they bombard and ionize gas molecules, and the resultant positive ions are attracted to the collector. The ratio of the collector current (positive ion current) to the grid current is proportional to the gas pressure.

ELECTRICAL

Filament Type (Note 1)	Tungsten
Operating Filament Voltage (Approx.)	7 ac or dc Volts
Operating Filament Current	2.5 ± 8% Amperes

MECHANICAL

Maximum Tube Length (Excluding Leads)	5-3/8"
Maximum Bulb Diameter	2-1/16"
Tubulation (Note 3)	3/4" (Approx.) Diameter Hard Glass Corning Code 7740
Mounting Position	Vertical

MAXIMUM RATINGS

Absolute Maximum Values

Ion Collector Voltage	−100	max.	Volts
Grid Voltage	+500	max.	Volts
Ambient Temperature	100	max.	°C
Gas Pressure	0.001	max.	mm Hg
Filament Voltage (Note 2)	10	max.	Volts
Emission Current	200	max.	Ma.

TYPICAL OPERATION

Ion Collector Voltage	−30	Volts
Grid Voltage	+150	Volts
Grid Current	10	Ma.
Sensitivity	1 μa./10^{-5}	mm Hg

CONDITIONS FOR OUTGASSING ELEMENTS

Ion Collector	Connected to Grid		
Grid Voltage	+500	max.	Volts
Filament (Note 2), Series	20	max.	Volts
Parallel	10	max.	Volts
Grid & Collector Power	100	max.	Watts

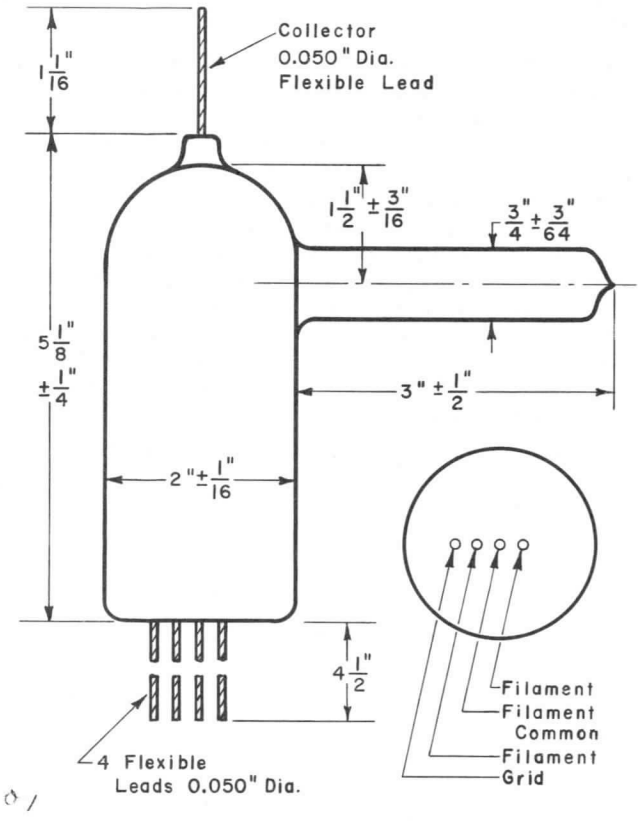

NOTES

1. The WL-22619 has two filaments, both of which should be used during outgassing cycles. During pressure measuring operation only one filament need be used. The voltage and current values are for either filament operated alone.
2. If it is necessary to outgas the tube using one filament only, the voltage must not exceed 11V. Shorter life must be expected under these conditions.
3. Other ion gauges, similar to type WL-22619 but having different sizes and materials of tubulation, are available under different numbers.

APPLICATION

The basic principle of the ionization gauge is described briefly in the introduction, where mention was made of the ratio of collector current to grid current as a measure of gas pressure. In order to measure gas pressure with an ionization gauge tube, the current ratio or some proportional quantity must be observed. If the grid current is held constant, then gas pressure will be proportional to collector current. The accuracy of pressure values is, then, dependent on the stability of grid current. The grid current is reasonably independent of grid voltage for grid voltages above that corresponding to the maximum probability of ionization of any gas which may be present. A grid voltage of 150 volts is sufficient, and stability is increased by the use of a voltage regulator tube (0D3).

The collector voltage must be sufficiently negative to attract all positive ions. This value is not critical: in practice, a voltage of –22.5 or greater will be satisfactory.

Ionization gauge tubes are commonly operated temperature limited. Consequently, the grid current at a fixed grid voltage is a first order function of filament temperature. This effect provides a convenient means of controlling grid current, i.e., by control of filament voltage.

Outgassing of metal and glass parts can be accomplished conveniently by connecting grid and collector together and passing a high current through the tube. The voltage applied to the grid and collector should not exceed +500 volts and maximum outgas power is 100 watts. DC supply is recommended for outgassing, although line-frequency supply has been used successfully. The two units of the filament may be operated either in series or parallel. Emission current is adjusted by increasing the filament voltage until the desired outgassing condition is reached. Although the elements may be outgassed using only one filament, due to the higher operating temperature required to produce the necessary outgassing current, tungsten evaporation is rapid and seriously impairs the life of the tube. Consequently outgassing using both filaments is strongly recommended.

To facillitate outgassing, the following schedule should be followed, especially during the first outgassing of a new tube or after a tube has been exposed to air.

Starting at 25 mA raise the bombarding current in 25 mA steps to maximum desired current. Each step should be 5 minutes minimum and the tube should be switched off for 1 minute between steps. At no time should the filament voltage exceed the maximum allowed.

The filament should never be heated in air; therefore, it is desirable to employ a thermo-couple or Pirani gauge coupled to a relay system to prevent excitation of the tube until the gas pressure has been reduced to 0.001 mm of mercury. The power-supply control circuit shown in Figure 1 incorporates such protection. The thermocouple tube closes the sensitive relay when the gas pressure has been reduced to the operating range of the ion gauge. Next, an auxiliary relay closes the power contactor. In the event a leak develops, the circuit removes power from the gauge tube.

Two power supply circuit diagrams are given: Figure 2 is relatively simple. It does not provide automatic regulation of filament temperature. The operator is required to set a reference level of grid (electron) current each time a reading is taken. The reference is set by the variable transformer in the primary of the filament transformer. The accuracy is dependent upon steadiness of electron current in the time interval between setting the electron current and reading the ion current.

The second supply circuit, Figure 3 provides continuous regulation of electron current; therefore, the gas pressure can be continuously read without resetting the reference grid current. The filament temperature is regulated by a varying impedance in series with the primary of the filament transformer. This series impedance is the plate resistance of the 6AS7-G tube. The impedance is determined by the 6AS7-G grid potential which, in turn, is provided by the voltage potential drop across the plate load resistance of the 6AU6. The grid bias of the 6AU6 is derived from the gauge tube electron (grid) current flowing through resistor R1. Thus if this grid current tends to rise, the temperature of the ion gauge filament is reduced and the electron current is maintained substantially constant.

The gas (ion) current can be measured by any commercial microammeter having a range of 0.01 microampere to 1.0 milliampere. The Beta Electronics microammeter is an example of a suitable meter. Precision meters of the D'Arsonval type may be used to measure gas currents in the higher pressure ranges.

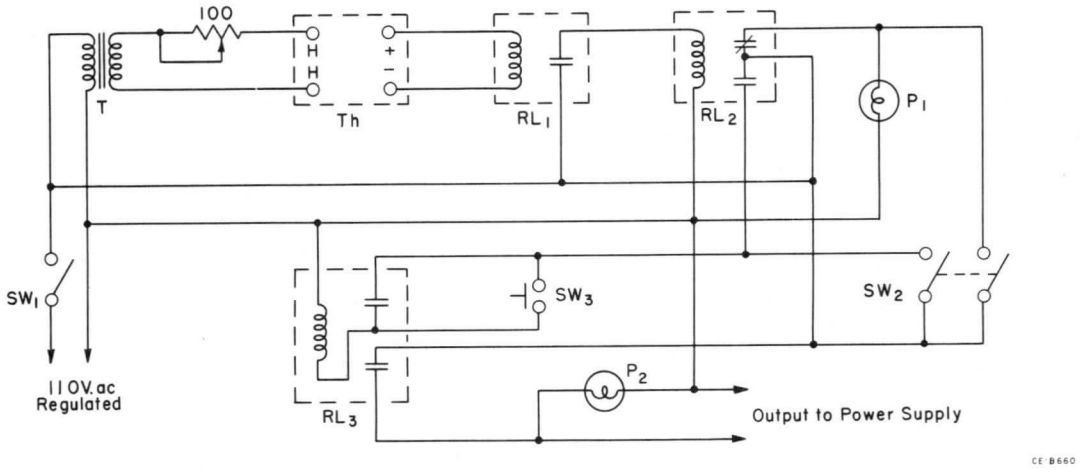

FIGURE 1

Resistor value in ohms

Th – Thermocouple: Type 7677 or equivalent

RL_1 – Sensitrol or equivalent

RL_2 – Weston 712 relay or equivalent

RL_3 – 115-volt relay

P_1 – 115-volt pilot lamp, red

P_2 – 115-volt pilot lamp, green

SW_1 – Switch

SW_2 – DPST switch

SW_3 – Manual start-reset (normally open push button)

T – Transformer: 110v primary; 6.3v, 1a. secondary

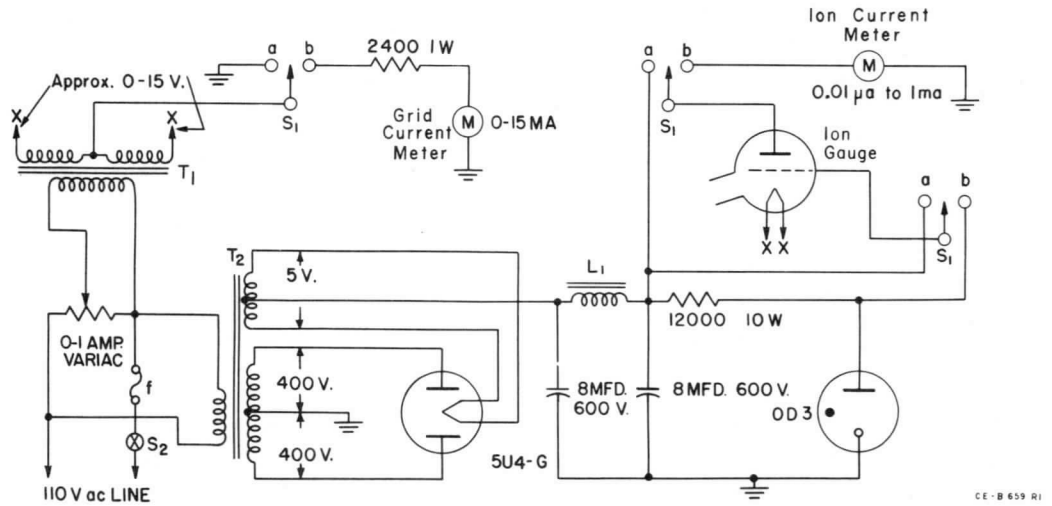

FIGURE 2

Resistor value in ohms

L_1 – Stancor C-1721 or equivalent

T_1 – UTC S70 or equivalent

T_2 – Stancor PM8412 or equivalent

S_1 – 3PDT switch (position a to outgas, position b to operate)

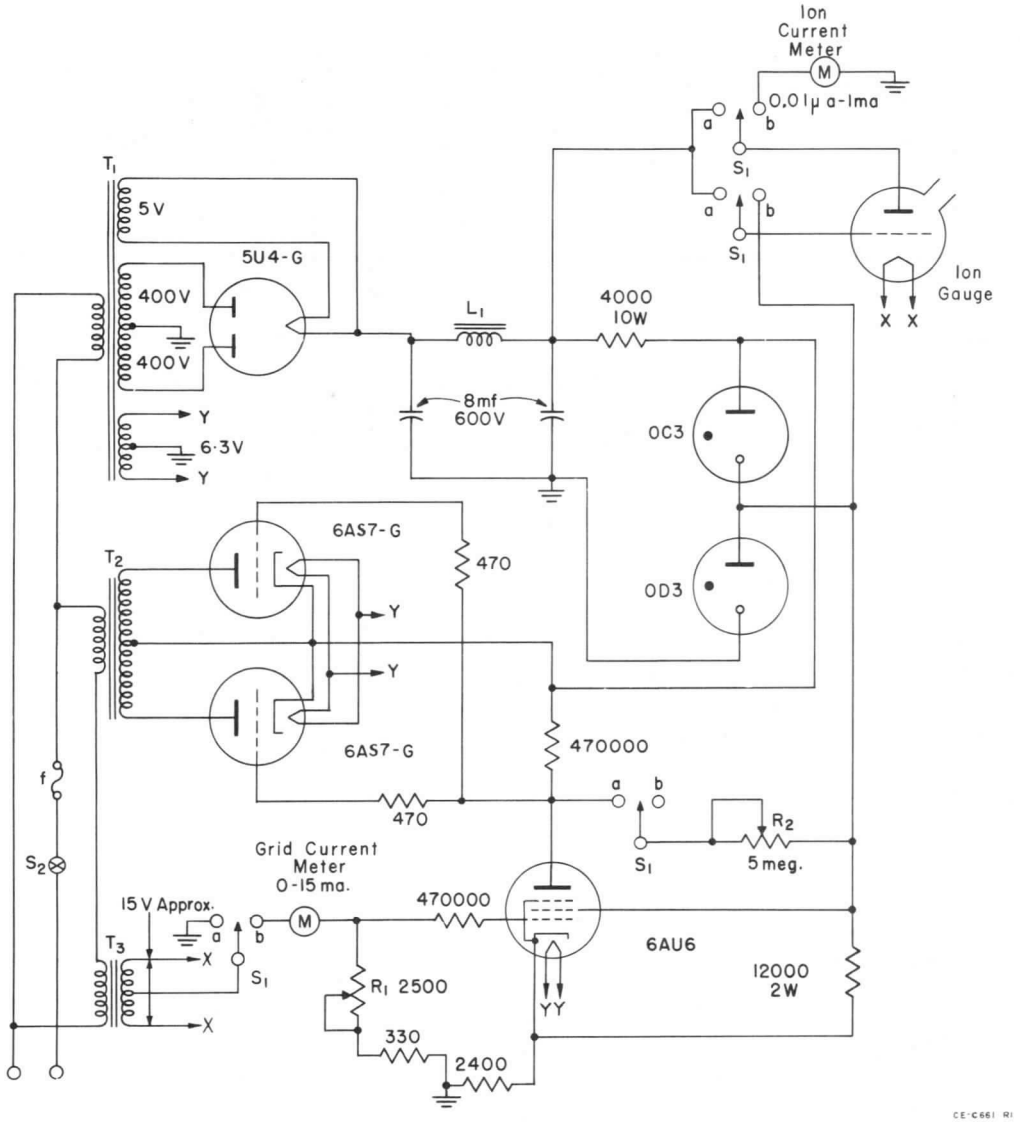

FIGURE 3

Resistor value in ohms

Resistors are ½ watt except as specified.

S_1 – 4PDT switch (position a to outgas, position b to operate)

R_1 – Grid current adjustment

R_2 – Outgas adjustment

T_1 – Stancor PM-8412 or equivalent

T_2 – Stancor PM-8410 or equivalent

T_3 – UTC S70 or equivalent

L_3 – Stancor C-1721 or equivalent

The information contained herein is supplied without assuming responsibility for infringement of patents or other rights of third parties which may result from its use. No license is granted by implication or otherwise under any patent or patent rights of Westinghouse Electric Corporation.

LOW PRESSURE ION GAUGE TUBE TYPE WL-22627

The WL-22627 is an ionization type vacuum gauge tube for measurement of gas pressures from 10^{-3} to 10^{-10} mm of mercury. The tube is constructed with all element leads mounted in one end of the hard glass bulb and a 3/4" diameter tubulation at the other end.

The WL-22627 is a triode of the Bayard-Alpert inverted geometry design with two tungsten filaments which may be operated singly, in series, or in parallel. The tube has a minimum of metal surfaces with the result that the elements are easily outgassed by electron bombardment.

The grid structure is operated at a positive potential with respect to the filament while the ion collector is at a negative potential. Electrons are accelerated from the filament to the grid; they bombard and ionize gas molecules, and the resultant positive ions are attracted to the collector. The ratio of the collector current (positive ion current) to the grid current is proportional to the gas pressure.

ELECTRICAL

Filament Type (Note 1)	Tungsten
Operating Filament Voltage (Approx.)	7 ac or dc Volts
Operating Filament Current	2.5 ± 8% Amperes

MECHANICAL

Maximum Tube Length (Including Tubulation)	8"
Maximum Bulb Diameter	2-1/8"
Tubulation (Note 3)	3/4" (Approx.) Diameter Hard Glass Corning Code 7740
Mounting Position	Vertical

MAXIMUM RATINGS

Absolute Maximum Values

Ion Collector Voltage	−100	max.	Volts
Grid Voltage	+500	max.	Volts
Ambient Temperature	100	max.	°C
Gas Pressure	0.001	max.	mm Hg
Filament Voltage (Note 2)	10	max.	Volts
Emission Current	200	max.	Ma.

TYPICAL OPERATION

Ion Collector Voltage	−30	Volts
Grid Voltage	+150	Volts
Grid Current	10	Ma.
Sensitivity	1 μA/10^{-5}	mm Hg

CONDITIONS FOR OUTGASSING ELEMENTS

Ion Collector	Connected to Grid		
Grid Voltage	+500	max.	Volts
Filament (Note 2), Series	20	max.	Volts
Parallel	10	max.	Volts
Grid & Collector Power	100	max.	Watts

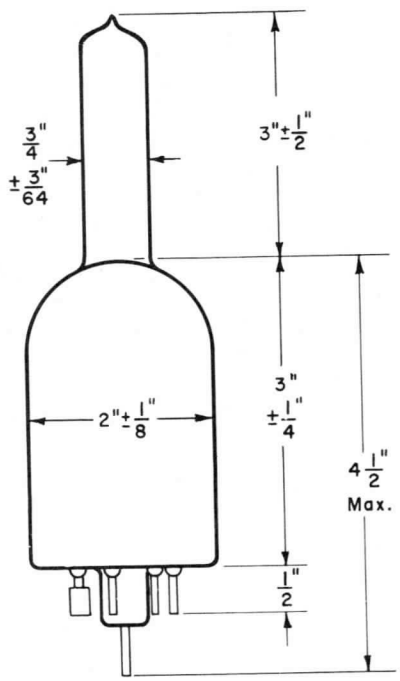



Pin No.	Element
1	Filament # 1
2	Filament # 1
3	Grid
4	No Connection
5	Filament # 2
6	Filament # 2
7	Grid
8	Collector

NOTES

1. The WL-22627 has two filaments, both of which should be used during outgassing cycles. During pressure measuring operation only one filament need be used. The voltage and current values are for either filament operated alone.
2. If it is necessary to outgas the tube using one filament only, the voltage must not exceed 11V. Shorter life must be expected under these conditions.
3. Other ion gauges, similar to type WL-22627 but having different sizes and materials of tubulation, are available under different numbers.

PRINTED IN U.S.A.

APPLICATION

The basic principle of the ionization gauge is described briefly in the introduction, where mention was made of the ratio of collector current to grid current as a measure of gas pressure. In order to measure gas pressure with an ionization gauge tube, the current ratio or some proportional quantity must be observed. If the grid current is held constant, then gas pressure will be proportional to collector current. The accuracy of pressure values is, then, dependent on the stability of grid current. The grid current is reasonably independent of grid voltage for grid voltages above that corresponding to the maximum probability of ionization of any gas which may be present. A grid voltage of 150 volts is sufficient, and stability is increased by the use of a voltage regulator tube (0D3).

The collector voltage must be sufficiently negative to attract all positive ions. This value is not critical: in practice, a voltage of –22.5 or greater will be satisfactory.

Ionization gauge tubes are commonly operated temperature limited. Consequently, the grid current at a fixed grid voltage is a first order function of filament temperature. This effect provides a convenient means of controlling grid current, i.e., by control of filament voltage.

Outgassing of metal and glass parts can be accomplished conveniently by connecting grid and collector together and passing a high current through the tube. The voltage applied to the grid and collector should not exceed +500 volts and maximum outgas power is 100 watts. DC supply is recommended for outgassing, although line-frequency supply has been used successfully. The two units of the filament may be operated either in series or parallel. Emission current is adjusted by increasing the filament voltage until the desired outgassing condition is reached. Although the elements may be outgassed using only one filament, due to the higher operating temperature required to produce the necessary outgassing current, tungsten evaporation is rapid and seriously impairs the life of the tube. Consequently outgassing using both filaments is strongly recommended.

To facillitate outgassing, the following schedule should be followed, especially during the first outgassing of a new tube or after a tube has been exposed to air.

Starting at 25 mA raise the bombarding current in 25 mA steps to maximum desired current. Each step should be 5 minutes minimum and the tube should be switched off for 1 minute between steps. At no time should the filament voltage exceed the maximum allowed.

The filament should never be heated in air; therefore, it is desirable to employ a thermo-couple or Pirani gauge coupled to a relay system to prevent excitation of the tube until the gas pressure has been reduced to 0.001 mm of mercury. The power-supply control circuit shown in Figure 1 incorporates such protection. The thermocouple tube closes the sensitive relay when the gas pressure has been reduced to the operating range of the ion gauge. Next, an auxiliary relay closes the power contactor. In the event a leak develops, the circuit removes power from the gauge tube.

Two power supply circuit diagrams are given: Figure 2 is relatively simple. It does not provide automatic regulation of filament temperature. The operator is required to set a reference level of grid (electron) current each time a reading is taken. The reference is set by the variable transformer in the primary of the filament transformer. The accuracy is dependent upon steadiness of electron current in the time interval between setting the electron current and reading the ion current.

The second supply circuit, Figure 3 provides continuous regulation of electron current; therefore, the gas pressure can be continuously read without resetting the reference grid current. The filament temperature is regulated by a varying impedance in series with the primary of the filament transformer. This series impedance is the plate resistance of the 6AS7-G tube. The impedance is determined by the 6AS7-G grid potential which, in turn, is provided by the voltage potential drop across the plate load resistance of the 6AU6. The grid bias of the 6AU6 is derived from the gauge tube electron (grid) current flowing through resistor R1. Thus if this grid current tends to rise, the temperature of the ion gauge filament is reduced and the electron current is maintained substantially constant.

The gas (ion) current can be measured by any commercial microammeter having a range of 0.01 microampere to 1.0 milliampere. The Beta Electronics microammeter is an example of a suitable meter. Precision meters of the D'Arsonval type may be used to measure gas currents in the higher pressure ranges.

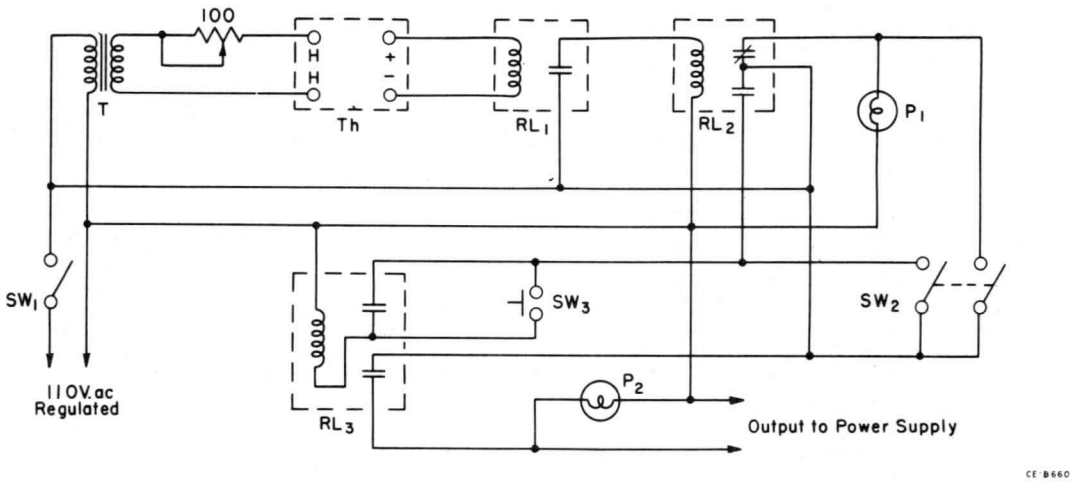

FIGURE 1

Resistor value in ohms

Th – Thermocouple: Type 7677 or equivalent

RL_1 – Sensitrol or equivalent

RL_2 – Weston 712 relay or equivalent

RL_3 – 115-volt relay

P_1 – 115-volt pilot lamp, red

P_2 – 115-volt pilot lamp, green

SW_1 – Switch

SW_2 – DPST switch

SW_3 – Manual start-reset (normally open push button)

T – Transformer: 110v primary; 6.3v, 1a. secondary

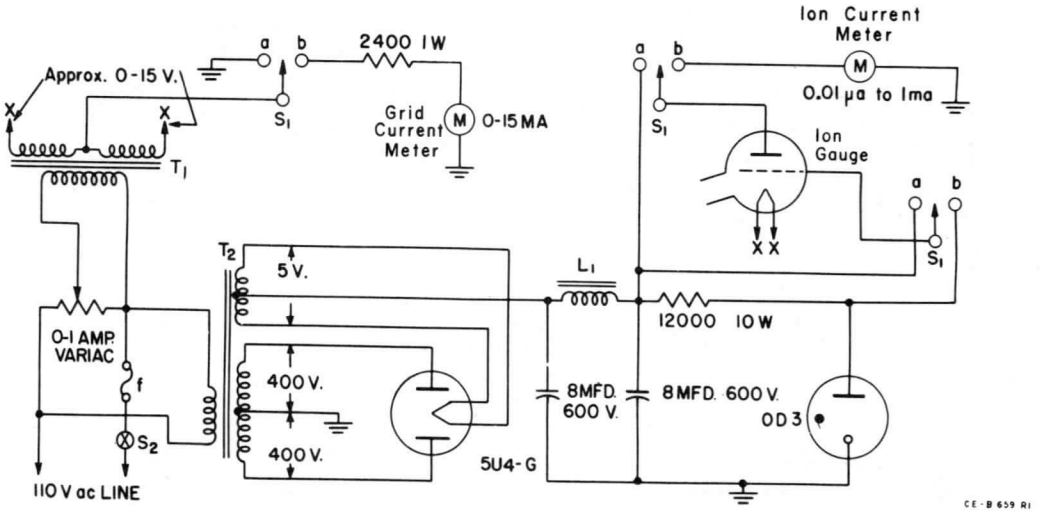

FIGURE 2

Resistor value in ohms

L_1 – Stancor C-1721 or equivalent

T_1 – UTC S70 or equivalent

T_2 – Stancor PM8412 or equivalent

S_1 – 3PDT switch (position a to outgas, position b to operate)

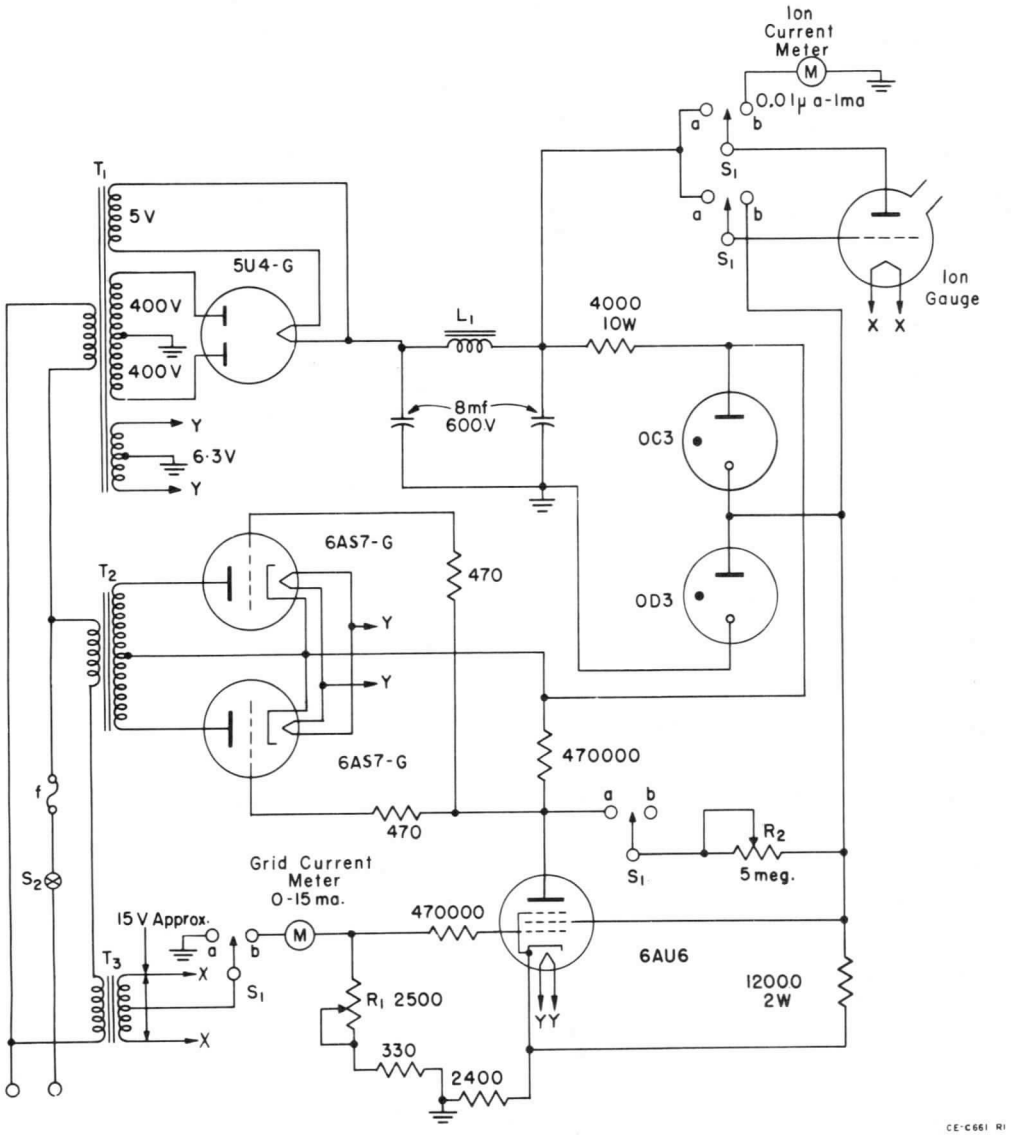

FIGURE 3

Resistor value in ohms

Resistors are ½ watt except as specified.

S_1 – 4PDT switch (position a to outgas, position b to operate)

R_1 – Grid current adjustment

R_2 – Outgas adjustment

T_1 – Stancor PM-8412 or equivalent

T_2 – Stancor PM-8410 or equivalent

T_3 – UTC S70 or equivalent

L_3 – Stancor C-1721 or equivalent

The information contained herein is supplied without assuming responsibility for infringement of patents or other rights of third parties which may result from its use. No license is granted by implication or otherwise under any patent or patent rights of Westinghouse Electric Corporation.

Westinghouse

WL-22643

April 1, 1962

LOW PRESSURE ION GAUGE TUBE TYPE WL-22643

The WL-22643 is an ionization type vacuum gauge tube for measurement of gas pressures from 10^{-3} to 10^{-9} mm of mercury. The tube is constructed with all element leads mounted in one end of the hard glass bulb and a 3/4" diameter tubulation at the other end.

The WL-22643 is a triode of the Bayard-Alpert inverted geometry design with two tungsten filaments which may be operated singly, in series, or in parallel. The helical grid structure is made of non-sag tungsten wire, and is easily outgassed by connecting it directly to a suitable AC or DC supply.

The grid structure is operated at a positive potential with respect to the filament while the ion collector is at a negative potential. Electrons are accelerated from the filament to the grid; they bombard and ionize gas molecules, and the resultant positive ions are attracted to the collector. The ratio of the collector current (positive ion current) to the grid current is proportional to the gas pressure.

ELECTRICAL

Filament Type	Tungsten
Filament Voltage (1 Filament)	Approx. 7 AC or DC Volts
Filament Current (1 Filament)	2.5 ± 8% Amperes

MECHANICAL

Maximum Tube Length with Tubulation	8"
Maximum Bulb Diameter	2-1/8"
Tubulation: (Note 1)	
Size	3/4 Inch
Material	Pyrex (Corning Code 7740)
Mounting Position	Vertical

MAXIMUM RATING

Absolute Maximum Values

Ion Collector Voltage	−100	max.	Volts
Grid Voltage	+500	max.	Volts
Ambient Temperature	100	max.	°C
Gas Pressure	0.001	max.	mm Hg.

TYPICAL OPERATION

Ion Collector Voltage	−30	Volts
Grid Voltage	+150	Volts
Grid Current	10	Ma.
Sensitivity	1 μA/10^{5}	mm Hg.

CONDITIONS FOR OUTGASSING GRID

Grid Voltage	Approx.	6 to 7	Volts
Grid Current	Approx.	9 to 10	Amperes

NOTES

1. Other ion gauges, similar to type WL-22643 but having different sizes and materials of tubulation are available under different numbers.

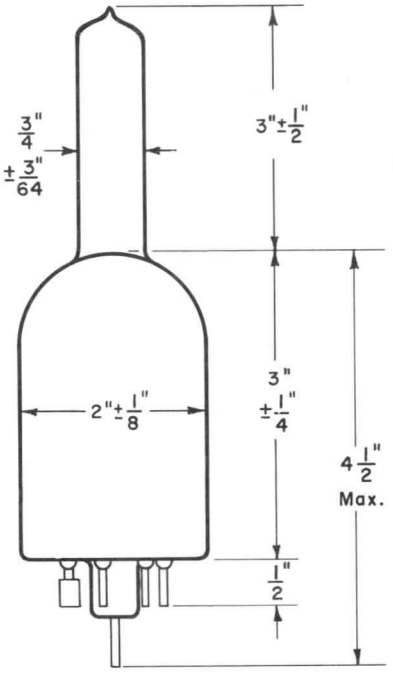

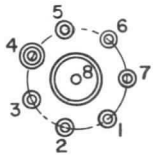

Pin No.	Element
1	Filament # 1
2	Filament # 1
3	Grid
4	No Connection
5	Filament #2
6	Filament #2
7	Grid
8	Collector

The information contained herein is supplied without assuming responsibility for infringement of patents or other rights of third parties which may result from its use. No license is granted by implication or otherwise under any patent or patent rights of Westinghouse Electric Corporation.

PRINTED IN U.S.A.

Vacuum Gauge Section

WESTINGHOUSE ELECTRIC CORPORATION, ELECTRONIC TUBE DIVISION, ELMIRA, NEW YORK

NON-BURN OUT LOW PRESSURE ION GAUGE TUBE TYPE WL-22754

The WL-22754 is an ionization type of vacuum-gauge tube for measurement of gas pressure as low as 10^{-9} TORR. The tube has a hard glass bulb with a 3/4 inch diameter tubulation. The WL-22754 employs a Bayard-Alpert electrode structure having a minimum of metal surface for ease of out-gassing.

The WL-22754 is a triode having a thoria coated iridium filament which will not burn out if accidently exposed to atmospheric pressure at operating temperature for short periods of time. The helical grid structure is made of non-sag tungsten wire and is easily outgassed by connecting it directly to a suitable A-C or D-C supply.

The grid structure is operated at a positive potential with respect to the filament while the ion collector is at a negative potential. Electrons are accelerated from the filament to the grid; they bombard and ionize gas molecules, and the resultant positive ions are attracted to the collector. The ratio of the collector current (positive ion current) to the grid current is proportional to the gas pressure.

ELECTRICAL

Filament Type (Note 1)	Thoria Coated Iridium	
Filament Voltage	2.5 to 3	Volts
Filament Current	2.5 to 3	Amperes

MECHANICAL

Maximum Tube Length	5-1/4"	
Maximum Bulb Diameter	2-1/16	
Tabulation:		
Size (Note 2)	3/4 Inch	
Material (Note 2)	Nonex (Corning Code 7720)	
Mounting Position	Vertical	

MAXIMUM RATINGS

Absolute Maximum Values

Ion Collector Voltage	−100 max.	Volts
Grid Voltage	+500 max.	Volts
Ambient Temperature	100 max.	°C
Bake-out Temperature	450 max.	°C
Gas Pressure	10^{-3} max.	TORR

TYPICAL OPERATION

Ion Collector Voltage	−30	Volts
Grid Voltage	+150	Volts
Grid Current	10	Ma.
Sensitivity (Note 3)	$1\mu a/10^{-5}$	TORR
Conditions For Outgassing Grid:		
Grid Voltage	Approx. 6 to 7	Volts
Grid Current	Approx. 9 to 10	Amperes

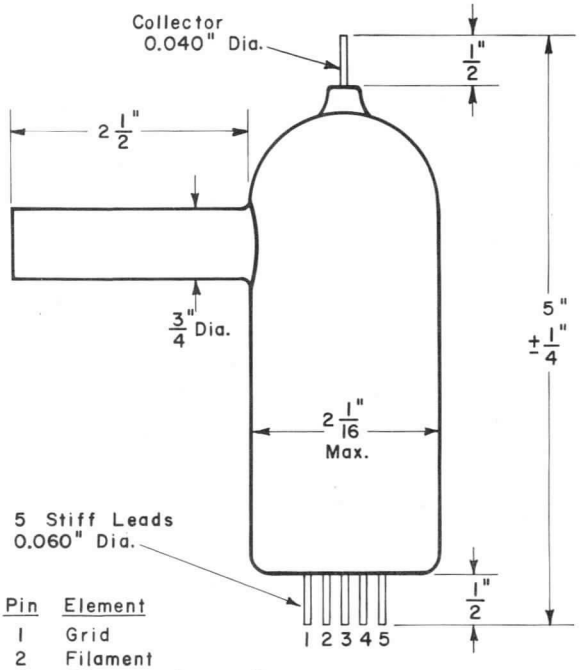

Pin	Element
1	Grid
2	Filament
3	Filament Center Tap
4	Filament
5	Grid

NOTES

1. The filament is centertapped. For maximum life at the above ratings, both halves should be used. Single filament operation is permissable at lower emission currents or in event of failure of other half.
2. Other gauge tubes similar to WL-22754 but having different sizes and materials of tubulation are available under other numbers.
3. At grid current of 10 ma. At other grid currents, pressure equals ion current divided by product of grid current and sensitivity where sensitivity is 10/TORR.

The information contained herein is supplied without assuming responsibility for infringement of patents or other rights of third parties which may result from its use. No license is granted by implication or otherwise under any patent or patent rights of Westinghouse Electric Corporation.

PRINTED IN U.S.A. Vacuum Gauge Section

WESTINGHOUSE ELECTRIC CORPORATION, ELECTRONIC TUBE DIVISION, ELMIRA, NEW YORK

Quick Reference Guide 86-754

Westinghouse

HOLLOW CATHODE DISCHARGE DEVICES For ATOMIC ABSORPTION SPECTROSCOPY





Westinghouse Electric Corporation
Electronic Tube Division • Elmira, N.Y.
Supersedes ET 1437 2/64
EFF. DATE: August 1965

Westinghouse ..... HOLLOW

SINGLE ELEMENT TYPES

CATHODE MAT'L & TYPES	WINDOW & SIZE Note 1	GAS FILL Note 2	MAX mA Note 3	ANALY LINES Å
Aluminum				
WL-22804	Q – B	A	20	3092
WL-22809	P – A	Ne	20	3962
WL-22929	Q – B	Ne	20	–
WL-22954	Q – A	Ne	20	–
WL-22870	Q – A	A	20	–
Antimony				
WL-22840	Q – B	A	25	2176
WL-22931	Q – B	Ne	25	2311
WL-22956	Q – A	Ne	25	–
WL-22872	Q – A	A	25	–
Arsenic				
WL-22836	Q – B	Ne	20	1937
WL-22873	Q – A	Ne	20	1972
Barium				
WL-22834	P – A	Ne	30	5536
Bismuth				
WL-22841	Q – B	A	12	2231
WL-22874	Q – A	A	12	3068
WL-22932	Q – B	Ne	12	–
WL-22957	Q – A	Ne	12	–
Boron				
WL-22916	Q – B	A	25	2497
WL-22917	Q – A	A	25	–
Cadmium				
WL-22816	Q – B	A	12	2288
WL-22875	Q – A	A	12	3261
WL-22933	Q – B	Ne	12	–
WL-22958	Q – A	Ne	12	–
Calcium				
WL-22610	P – A	Ne	20	4227
Cerium				
WL-22977	Q – B	Ne	20	–
WL-22978	Q – A	Ne	20	–
Cesium				
WL-22817	P – A	A	30	8521
WL-22823	P – A	Ne	30	4556

CATHODE MAT'L & TYPES	WINDOW & SIZE Note 1	GAS FILL Note 2	MAX mA Note 3	ANALY LINES Å
Chromium				
WL-22812	P – A	A	30	3579
WL-22821	Q – B	A	30	4254
WL-22877	Q – A	A	30	–
WL-22934	Q – B	Ne	30	–
WL-22959	Q – A	Ne	30	–
Cobalt				
WL-22813	P – A	A	35	2407
WL-22814	Q – B	A	35	3454
WL-22928	Q – B	Ne	35	3527
WL-22953	Q – A	Ne	35	–
WL-22878	Q – A	A	35	–
Copper				
WL-22603	P – A	Ne	40	3247
WL-22606	Q – B	A	40	3274
WL-22879	Q – A	A	40	–
WL-23041	Q – B	Ne	40	–
WL-23042	Q – A	Ne	40	–
Dysprosium				
WL-22827	Q – B	Ne	25	4046
WL-22880	Q – A	Ne	25	4187
Erbium				
WL-22828	Q – B	Ne	25	4008
WL-22881	Q – A	Ne	25	–
Europium				
WL-22845	Q – B	Ne	20	4594
WL-22882	Q – A	Ne	20	4627
Gadolinium				
WL-22975	P – A	Ne	20	3684
WL-22985	Q – B	Ne	20	3713
WL-22986	Q – A	Ne	20	–
Gallium				
WL-22833	Q – B	Ne	15	2874
WL-22884	Q – A	Ne	15	4172
Germanium				
WL-23160	Q – B	Ne	20	–

CATHODE SPECTRAL TUBES

SINGLE ELEMENT TYPES

CATHODE MAT'L & TYPES	WINDOW & SIZE Note 1	GAS FILL Note 2	MAX mA Note 3	ANALY LINES Å
Gold				
WL-22839	Q – B	A	15	2428
WL-22883	Q – A	A	15	2676
WL-22935	Q – B	Ne	15	–
WL-22960	Q – A	Ne	15	–
Holmium				
WL-22829	Q – B	Ne	20	4054
WL-22885	Q – A	Ne	20	5983
Indium				
WL-22867	Q – B	A	20	3040
WL-22915	Q – A	A	20	–
WL-22996	Q – B	Ne	20	–
Iridium				
WL-23145	Q – B	Ne	25	–
Iron				
WL-22602	P – A	A	40	2483
WL-22820	P – A	Ne	40	3720
WL-22611	Q – B	A	40	–
WL-22886	Q – A	A	40	–
WL-22810	Q – B	Ne	40	–
WL-22887	Q – A	Ne	40	–
High Purity Iron				
WL-22837	Q – B	Ne	35	2483
WL-22888	Q – A	Ne	35	3720
Lanthanum				
WL-22846	Q – B	A	20	4015
WL-22889	Q – A	A	20	3574
WL-23049	Q – B	Ne	20	3928
Lead				
WL-22838	Q – B	A	15	2170
WL-22890	Q – A	A	15	2833
WL-22927	Q – B	Ne	15	2614
WL-22952	Q – A	Ne	15	–
Lithium *(See Note)* (Natural)				
WL-22825	P – A	A	30	6708
WL-23115	Q – B	A	30	3233
WL-23060	P – A	Ne	30	–

CATHODE MAT'L & TYPES	WINDOW & SIZE Note 1	GAS FILL Note 2	MAX mA Note 3	ANALY LINES Å
Lithium-6 *(See Note)*				
WL-22830	P – A	Ne	30	6708
WL-22925	P – A	A	30	–
Lithium-7 *(See Note)*				
WL-22831	P – A	Ne	30	6708
WL-22926	P – A	A	30	–
Lutetium				
WL-23009	Q – B	Ne	20	3081
WL-23010	Q – A	Ne	20	–
Magnesium				
WL-22609	Q – B	A	20	2852
WL-22891	Q – A	A	20	2025
WL-22968	Q – B	Ne	20	2659
WL-22951	Q – A	Ne	20	–
Manganese				
WL-22608	Q – B	A	35	2795
WL-22876	Q – A	A	35	2801
WL-22815	P – A	A	35	–
WL-22936	Q – B	Ne	35	–
WL-22961	Q – A	Ne	35	–
Mercury				
WL-22847	Q – B	A	15	2537
WL-22892	Q – A	A	15	–
Molybdenum				
WL-22805	Q – B	A	35	3133
WL-22893	Q – A	A	35	3170
WL-22937	Q – B	Ne	35	–
WL-22962	Q – A	Ne	35	–
Neodymium				
WL-22979	Q – B	Ne	20	4925
WL-22980	Q – A	Ne	20	–
Nickel				
WL-22605	P – A	A	40	2320
WL-22663	Q – B	A	40	3415
WL-22894	Q – A	A	40	–
WL-22819	Q – B	Ne	40	–
WL-22895	Q – A	Ne	40	–
Niobium (Columbium)				
WL-22858	Q – B	Ne	30	4059
WL-22912	Q – A	Ne	30	4080

SINGLE ELEMENT TYPES

CATHODE MAT'L & TYPES	WINDOW & SIZE Note 1	GAS FILL Note 2	MAX mA Note 3	ANALY LINES Å
Osmium				
WL-23144	Q – B	A	25	–
Palladium				
WL-22857	Q – B	A	30	2448
WL-22911	Q – A	A	30	2476
WL-22969	Q – B	Ne	30	3404
WL-22970	Q – A	Ne	30	–
Phosphorus				
WL-22989	Q – B	Ne	20	–
WL-22990	Q – A	Ne	20	–
Platinum				
WL-22851	Q – B	A	30	2659
WL-22896	Q – A	A	30	–
Potassium				
WL-22863	P – A	Ne	25	7665 4044
Praseodymium				
WL-22981	Q – B	Ne	20	4951
WL-22982	Q – A	Ne	20	5133
Rhenium				
WL-22942	Q – B	Ne	30	3460
WL-22967	Q – A	Ne	30	3465
Rhodium				
WL-22850	Q – B	A	30	3435
WL-22897	Q – A	A	30	3692
WL-22997	Q – B	Ne	30	–
Rubidium				
WL-22824	P – A	Ne	30	7800
WL-23046	Q – B	Ne	30	–
Ruthenium				
WL-23138	Q – B	A	25	3499 3728
Samarium				
WL-22818	Q – B	Ne	30	3951
WL-22899	Q – A	Ne	30	4760
Selenium				
WL-22843	Q – B	A	15	1960
WL-22898	Q – A	A	15	2040
WL-22938	Q – B	Ne	15	–
WL-22963	Q – A	Ne	15	–

CATHODE MAT'L & TYPES	WINDOW & SIZE Note 1	GAS FILL Note 2	MAX mA Note 3	ANALY LINES Å
Silicon				
WL-22832	Q – B	A	20	2516
WL-22900	Q – A	A	20	–
WL-22939	Q – B	Ne	20	–
WL-22964	Q – A	Ne	20	–
Silver				
WL-22806	Q – B	A	20	3281
WL-22901	Q – A	A	20	3383
Sodium				
WL-22864	P – A	A	25	5890
WL-23059	P – A	Ne	25	3302
Strontium				
WL-22835	P – A	Ne	30	4607
Sulpher				
WL-23143	Q – B	Ne	20	–
Tantalum				
WL-22859	Q – B	A	30	3311
WL-22913	Q – A	A	30	–
WL-22971	Q – B	Ne	30	–
WL-22972	Q – A	Ne	30	–
Tellurium				
WL-22842	Q – B	A	15	2143
WL-22902	Q – A	A	15	2386
WL-22940	Q – B	Ne	15	–
WL-22965	Q – A	Ne	15	–
Terbium				
WL-22848	Q – B	Ne	30	4319
WL-22903	Q – A	Ne	30	4338
Thorium				
WL-23027	Q – B	Ne	30	–
WL-23028	Q – A	Ne	30	–
Thulium				
WL-23007	Q – B	Ne	20	4094
WL-23008	Q – A	Ne	20	4105
Tin				
WL-22822	Q – B	A	15	2863
WL-22904	Q – A	A	15	–
WL-22941	Q – B	Ne	15	–
WL-22966	Q – A	Ne	15	–
Titanium				
WL-22991	Q – B	Ne	25	3643
WL-22992	Q – A	Ne	25	3998

SINGLE ELEMENT TYPES

CATHODE MAT'L & TYPES	WINDOW & SIZE Note 1	GAS FILL Note 2	MAX mA Note 3	ANALY LINES Å
Tungsten				
WL-22844	Q – B	Ne	35	4009
WL-22905	Q – A	Ne	35	4294
WL-22849	Q – B	A	35	–
WL-22906	Q – A	A	35	–
Uranium				
WL-22826	Q – B	Ne	30	5027
WL-22907	Q – A	Ne	30	5915
Vanadium				
WL-22856	Q – B	A	35	3184
WL-22910	Q – A	A	35	3855
WL-22973	Q – B	Ne	35	–
WL-22974	Q – A	Ne	35	–

CATHODE MAT'L & TYPES	WINDOW & SIZE Note 1	GAS FILL Note 2	MAX mA Note 3	ANALY LINES Å
Ytterbium				
WL-22983	Q – B	A	20	3988
WL-22984	Q – A	A	20	–
Yttrium				
WL-22976	P – A	Ne	20	4077
WL-22987	Q – B	Ne	20	4102
WL-22988	Q – A	Ne	20	–
Zinc				
WL-22607	Q – B	A	18	2139
WL-22908	Q – A	A	18	3076
WL-22811	Q – B	Ne	18	–
WL-22909	Q – A	Ne	18	–
Zirconium				
WL-22860	Q – B	A	30	–
WL-22914	Q – A	A	30	–
WL-22998	Q – B	Ne	30	–

MULTIPLE ELEMENT TYPES

CATHODE MAT'L & TYPES	WINDOW & SIZE Note 1	GAS FILL Note 2	MAX mA Note 3
Ca - Mg - AL			
WL-22604	Q – B	A	20
WL-22871	Q – A	A	20
WL-22930	Q – B	Ne	20
WL-22955	Q – A	Ne	20
Ba - Ca - Sr			
WL-23034	P – A	Ne	25
Ca - Mg - Al - Li			
WL-23035	Q – B	Ne	18
WL-23036	Q – A	A	18
Na - K - Li			
WL-23043	P – A	Ne	30
Fe - Cu - Mn			
WL-23106	Q – B	Ne	35
Cr - Fe - Mn - Ni			
WL-23108	Q – B	Ne	30
Cu - Zn - Pb - Sn			
WL-23109	Q – B	Ne	12
As - Ni			
WL-23116	Q – B	Ne	20
Au - Ni			
WL-23117	Q – B	Ne	15
In - P			
WL-23118	Q – B	Ne	20
Cu - Ga			
WL-23119	Q – B	Ne	20

CATHODE MAT'L & TYPES	WINDOW & SIZE Note 1	GAS FILL Note 2	MAX mA Note 3
Se - Ni			
WL-23130	Q – B	Ne	15
Cu - Mn			
WL-23131	Q – B	Ne	35
Cu - Pb - Zn - Ag			
WL-23132	Q – B	Ne	15
Ba - Ca - Sr - Mg			
WL-23133	Q – B	Ne	25
Cu - Zn - Fe - Mn			
WL-23134	Q – B	Ne	15
Cu - Zn - Mo			
WL-23135	Q – B	Ne	15
Cu - Zn - Mo - Co			
WL-23141	Q – B	Ne	15
Cu - Zn - Pb - Cd			
WL-23146	Q – B	Ne	12
As - Sb - Bi			
WL-23147	Q – B	Ne	15
As - Se - Te			
WL-23148	Q – B	Ne	15
Ca - Mg - Al - Li			
WL-23158	Q – B	A	18
Na - K - Li			
WL-23159	P – A	A	30

NOTES

1: WINDOW CHARACTERISTICS

P = Pyrex (70% transmission at 3050 Å)
Q = Quartz (75% transmission at 2200 Å)
A = 1-1/2 inch diameter window
B = 1 inch diameter window

2: GAS FILL

A = Argon gas fill Ne = Neon gas fill

3: CURRENT RATING

The current rating shown is the maximum permissible figure and does not represent typical operation. For optimum performance and life, a tube should be operated at the lowest current consistent with the desired output characteristics.

LITHIUM CAUTION

Output from a Lithium cathode tube with neon fill will experience second-order interference from the Ne-3355 line. However, operation with any one of the listed Corning Glass sharp-cutoff filters will eliminate the interference and is to be preferred over the argon-filled tube.

Corning Glass Filters which Eliminate Ne-3355 Line

CS 2-58	CS 2-61	CS 3-67
CS 2-59	CS 2-62	CS 3-68
CS 2-60	CS 2-63	CS 3-69
	CS 3-66	

SIZE A

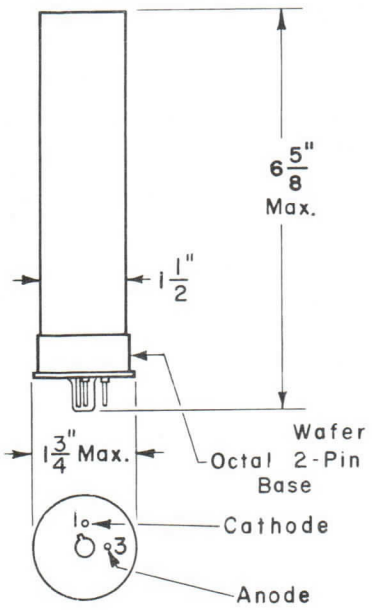

SIZE B

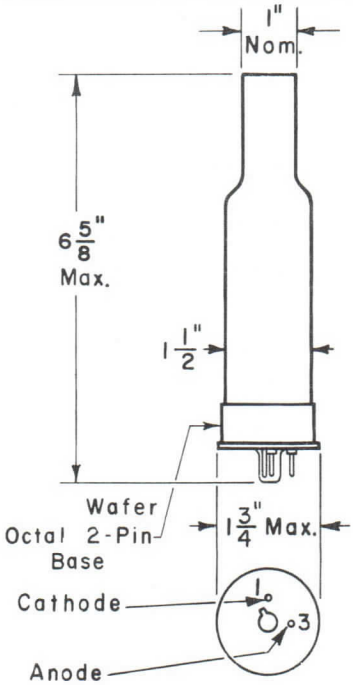

TYPICAL POWER SUPPLY CONNECTIONS

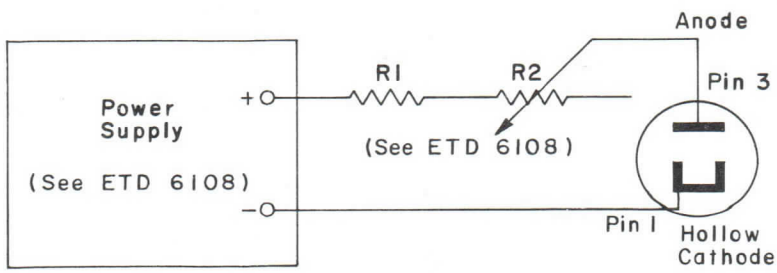

CE-A2092

PRODUCT ENGINEERING MEMO

ETD-6603
April 1966

HOLLOW CATHODE TUBES AND THEIR APPLICATION

by
J. C. Burger

Summary

Sealed-off hollow cathode tubes have been used for over 10 years as sources for atomic absorption spectroscopy. Recently, some interesting work has been done by Fassel and co-workers at Iowa State University with continuous sources but hollow cathode tubes remain the most satisfactory devices for routine atomic absorption work. Today, 194 types of single element and 26 types of multi-element hollow cathode tubes are readily available. These types cover 71 elements or over 68% of the elements in the periodic table. Several interesting and sometimes troublesome phenomena have been encountered when using these tubes. In this memo, a few of these items are mentioned. Some are characteristic of the hollow cathode tubes and some are characteristic of the particular system employed for analytical work.

SPECTRAL INTERFERENCE AND BANDWIDTH STUDIES

One item of interest in sealed-off hollow cathode tubes is the interference from fill gas lines. This problem has been met by either changing the fill gas or by using monochromators with a sufficiently narrow band pass. In the case of interference from second order gas lines when using a grating monochromator a cut-off filter may be used as shown in Figure 1. This Figure shows that

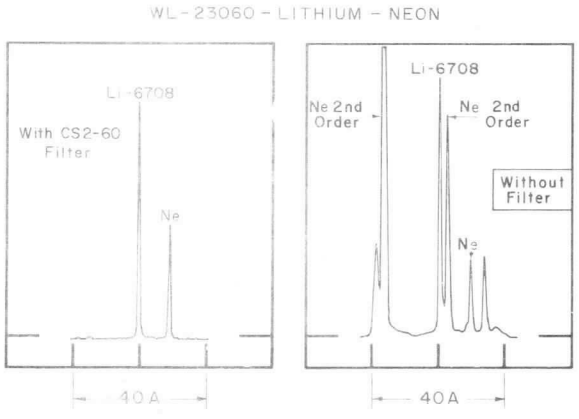

FIGURE 1

second order neon interference on the Li 6708 line may be eliminated without significant reduction in Li intensity by use of a filter such as the Corning CS 2-60.

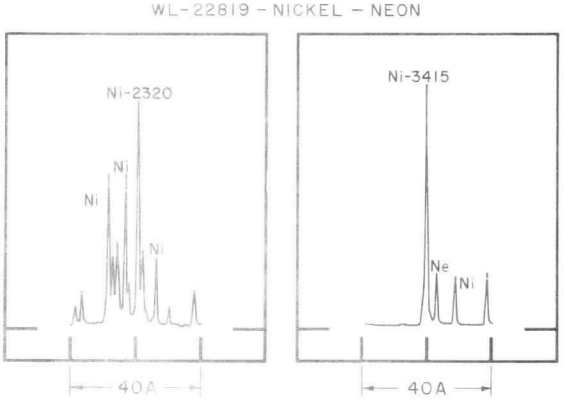

FIGURE 2

Figure 2 shows the nickel 2320A and 3415A lines. Of particular note is the fact that the more sensitive 2320A line is surrounded by numerous non-absorbing Ni lines. The easiest way to adequately isolate this line is to use a narrow band pass monochromator. The effect of bandpass on the working curve for the 2320A nickel

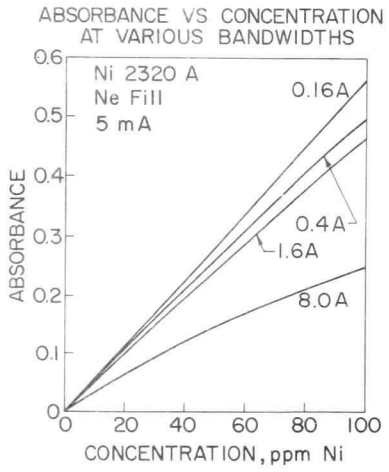

FIGURE 3

line may be seen in Figure 3. The curve established at a bandpass of 0.16A is a straight line over the indicated concentration range. Some bending of the curve occurs up to a 1.6A bandpass, and then between 1.6 and 8.0A, a serious deterioration of the working curve occurs, primarily because the light from the non-absorbing Ni lines is entering the monochromator. The sodium 3302/3 doublet has been used for the determination of sodium at higher concentration. Both argon and neon have numerous lines around this wavelength. It is interesting to look at the spectra taken as a function of bandpass for a sodium-argon hollow cathode tube in the region of the 3302 and 3303A sodium lines as shown in Figure 4. The sodium doublet is unresolved in all these spectra. At a 0.4A bandpass note that the line-to-background ratio is about 15 to 1 and the actual background is low. The instrumental zero is shown by

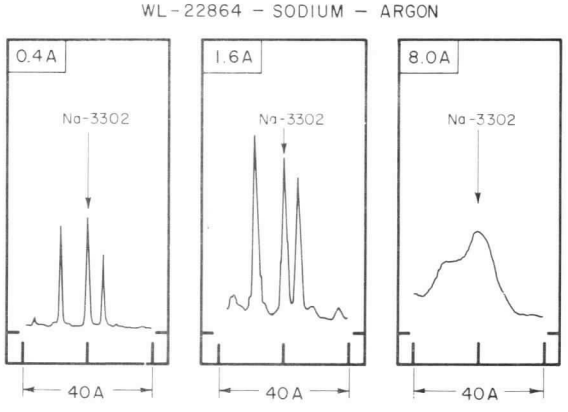

FIGURE 4

the index marks on the vertical sides of the box. The spectra taken at a 1.6A bandpass show a degradation of the line-to-background ratio to a value to 6.5 to 1 because the apparent background has increased at a faster rate than the line intensity. At an 8.0A bandpass, the complete character of the 3302A line has been lost except that a peak in the curve occurs at or

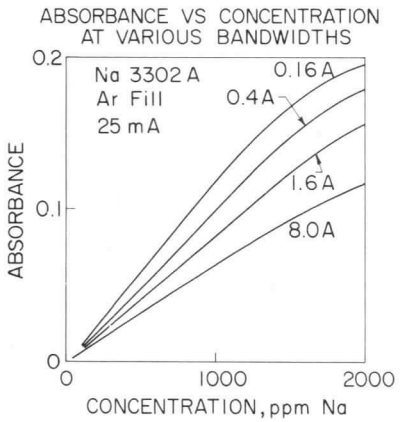

FIGURE 5

near this wavelength. Figure 5 shows working curves established at various band widths. A rather rapid deterioration of the working curve occurs as the bandpass is increased.

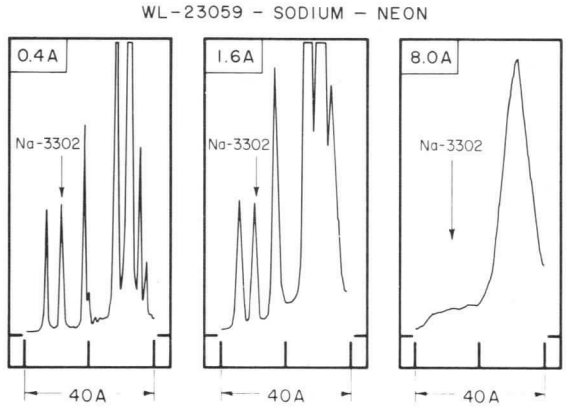

FIGURE 6

Figure 6 shows the spectra around the 3302A Na line for a neon filled sodium tube. The same indication for the instrumental zero is used here as on the sodium-argon spectra. Note again the very good line-to-background ratio of 19 to 1 at a band pass of 0.4A. A 1.6A band width shows that the background has risen while the peak intensity has remained essentially constant to give a line-to-background ratio of 8 to 1. At a bandpass of 8.0A, the 3302A Na line is indistinguishable from the background.

Figure 7 shows working curves at these bandwidths for the sodium-neon tube. The main item of interest is the more rapid decrease in sensitivity with increasing bandpass in comparison to the sodium-argon tube.

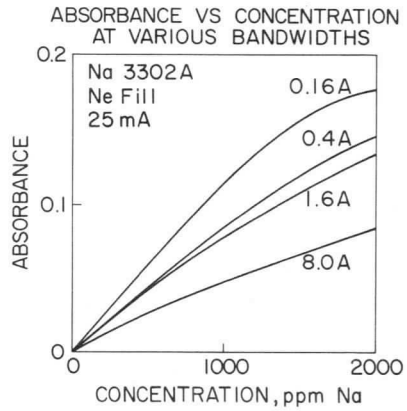

FIGURE 7

LIFE DATA

In the early days of atomic absorption spectroscopy, Some difficulty was experienced with hollow cathodes made of elements with low melting points and high vapor pressures. These elements would either be sputtered excessively or melted and then the material would run out of the hollow cathode. Both processes would result in short life and extremely variable output over the life of the device. One of these elements was lead, whose spectra is shown in Figure 8. Both the

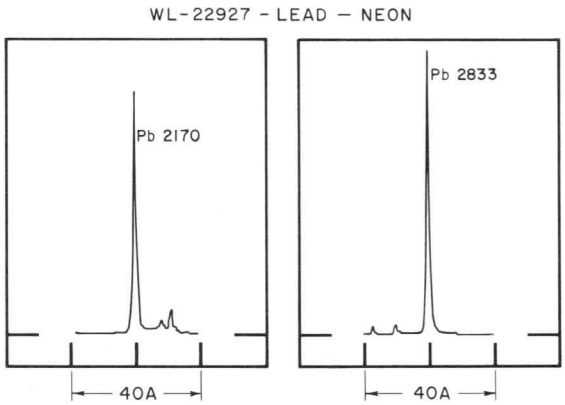

FIGURE 8

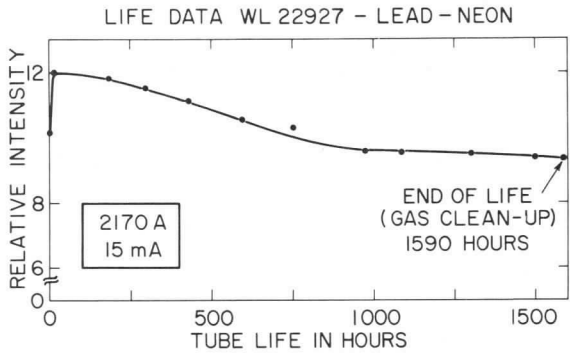

FIGURE 9

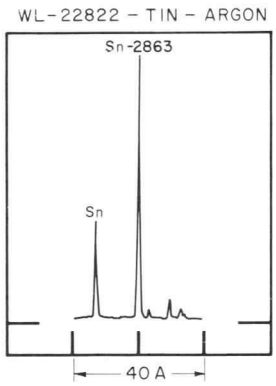

FIGURE 11

2170A and 2833A lines are shown. Recent developments in fabrication and processing techniques have led to devices that have considerably more constant output and a longer life. Life data for a recent lead-neon tube for the 2170A line are shown in Figure 9. This tube ran for a total of 1590 hours at a current of 15 mA, or almost 24 ampere-hours before it was rendered inoperative because of gas clean-up. Maximum variation in intensity over the life of the device was 20% based on the intensity at the start of the life test.

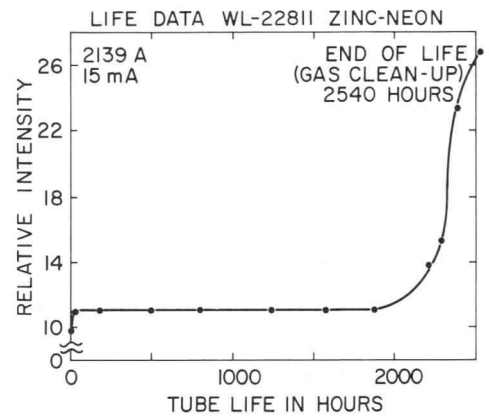

FIGURE 10

Figure 10 shows similar life data for a zinc tube. The data are for the 2138A line. Total life in this case was 2540 hours at 15 mA or over 38 ampere-hours. This tube had remarkably constant output for about 2000 hours, but then the output increased because of increased sputtering that was brought on by gas clean-up.

An element of interest that has a low melting point and a low vapor pressure is tin, whose hollow cathode spectra is shown in Figure 11. The more intense line is the 2863A and the less intense one is the 2850A line. Life data for the 2863A line in a tin-argon tube is

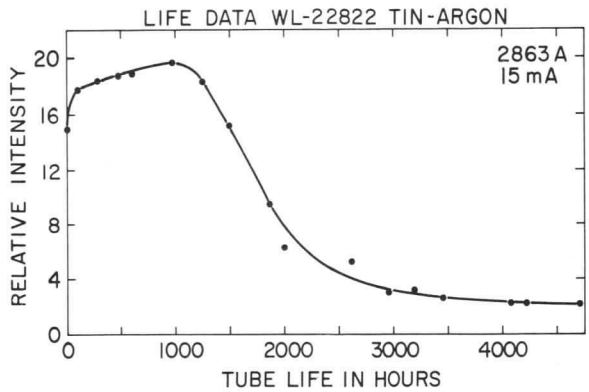

FIGURE 12

shown in Figure 12. The output rose slowly to a maximum at about 1000 hours and then fell until it established a relatively constant output plateau at about 3000 hours, This tube has now run for more than 5500 actual hours or 83 ampere-hours and is still maintaining the output shown on the end of the slide. In spite of the fact that the intensity is now about 1/10 its peak value, the tube exhibits the same performance with respect to absorbance as a function of concentration and would still be quite useable in most atomic absorption equipments.

PHOTOMULTIPLIER SATURATION

Some atomic absorption systems, when operated on half-wave rectified A.C., have reported difficulty because absorbance-concentration curves did not yield the expected shape. However, this problem was found

to be one of photomultiplier saturation rather than a hollow cathode tube problem, The saturation is caused by the high peak light intensities reaching the photomultiplier. These high light intensities generate such high electron densities in the final multiplier stages that the photomultiplier is incapable of handling them.

When operating a hollow cathode tube on half-wave rectified A.C., the peak currents, and also the peak light intensities required to attain the same average output, are about four to six times those reached in normal D.C. operation.

Photomultiplier saturation was checked by placing an oscilloscope across a 22 megohm resistor on the output of the photomultiplier and measuring the voltage. Results of this check are shown in Figure 13. The dashed line represents the voltage imposed on the hollow cathode tube while the solid lines shown the wave form of the photomultiplier pulse for four average hollow cathode currents. As indicated, the photomultiplier began to saturate somewhere between 15 and 20 mA (average) hollow cathode current. The output voltage for 20 mA on D.C. operation would be about 12 volts on this scale. The photomultiplier saturation was further checked by placing a neutral density filter between the hollow cathode tube and the slit. This corrected the problem and again indicates that the photomultiplier was saturating.

Figure 14 shows data for a copper tube where the photomultiplier current is plotted against hollow cathode tube current for three modes of operation, D.C., mechanically chopped D.C., and half wave rectified A.C. The photomultiplier saturation may be seen at photomultiplier currents in excess of 8 microamperes for the half-wave rectified A.C. operation.

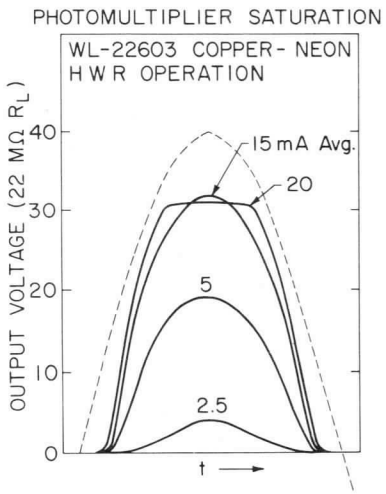

FIGURE 13

SELF-ABSORPTION AND REVERSAL IN HOLLOW CATHODE TUBES

I am indebted to Mr. D. K. Davies of the Westinghouse Research Laboratories for the data on Figure 15. This shows Fabrey-Perot interferometer traces for the copper 3247A line in a copper-neon hollow cathode tube at various tube currents. The Fabrey-Perot interferometer used had a resolution of about 0.003A, and the fine structure of the 3247A Cu line is shown in the slide. At 8 mA no reversal is seen for the 3247A doublet, but at 15 mA, it can be readily seen. At 30 mA, the reversal is quite severe. It is believed that the decrease in absorption with increase in H.C. current for the Cu 3247A line as shown in Figure 16 is due to self-absorption and line broadening in the hollow cathode tube. Note that even though reversal is severe at 30 mA the absorption changes only a few per cent as compared to the non-reversed condition at 8 mA.

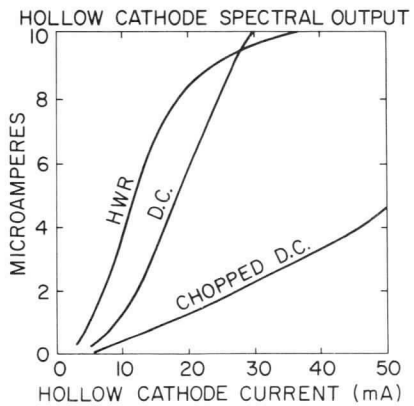

FIGURE 14

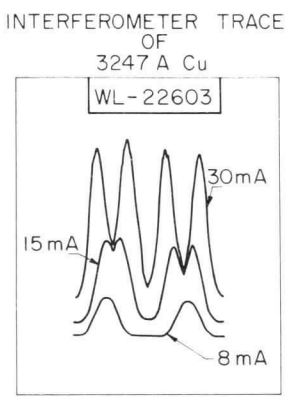

FIGURE 15

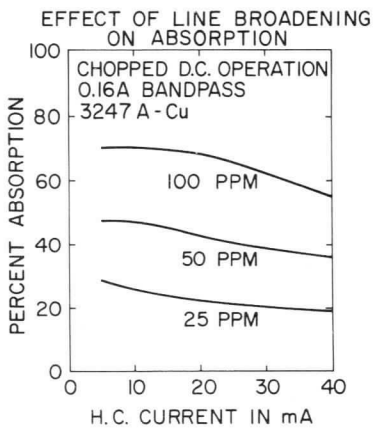

FIGURE 16

NEW DEVELOPMENTS

Historically, the development of hollow cathode sources has gone through several phases. Considering only the sealed-off variety designed specifically for atomic absorption spectroscopy there are three distinct classifications of tubes.

The first sealed-off hollow cathode devices for atomic absorption spectroscopy were made by A. Walsh and his colleagues at the Commonwealth Scientific & Industrial Research Organization in Melbourne, Australia. This design has been used, and is still in use, by most hollow cathode tube manufacturers. These hollow cathode tubes have basically an open structure of simple geometry where effective utilization of tube current has been neglected. In these designs, the current is not limited to the hollow. This permits the discharge to reach areas of the cathode that do not contribute to the spectral output.

The second phase in the development of sealed-off hollow cathode tubes was reached when the original sealed-off hollow cathode tube was redesigned. The redesign program considered such factors as geometry, life, fill gas pressures, and insulation and shielding to prevent "back-glow". The result of the redesign effort permitted Westinghouse to offer a tube having a significantly higher and more constant output with longer life at no additional cost to the user. Increases in intensity of the order of 5 to 50 are not uncommon for many elements in existing instruments.

The third development in hollow cathode tubes was the recent "high-intensity" tube developed in Australia. The "high-intensity" tube has an open structure and still appears quite similar to the original sealed-off hollow cathode tubes except that a second set of electrodes has been added. Most of the data on increased intensity factors reported for these tubes have been obtained by comparing the output of the "high-intensity" tube to the output from the original open type of sealed-off hollow cathode tube and, therefore, do not represent a valid comparison with the optimized design available in the Westinghouse tube. The "high-intensity" tube is apparently finding most use in instruments that have relatively high light losses and, consequently, require a farily wide band pass to obtain satisfactory signal levels. Considerable additional data on gas clean-up (or life), variation of output with time and direct comparison of output intensity and absorption characteristics with current Westinghouse hollow cathode tubes is needed to properly evaluate the "high-intensity" tubes. If this data is available, it has not been reported.

Westinghouse has a continuing program on all types of hollow cathode devices aimed at improvement of signal-to-noise ratios. Facilities at the Westinghouse Research Laboratories and at the Electronic Tube Division have used and will continue to be used in an effort to develop better hollow cathode tubes.

NOTE

Presented in part at the 17th Annual Pittsburgh Conference on Analytical Chemistry and Applied Spectroscopy, February 21-25, 1966.

SINGLE-ELEMENT

HOLLOW CATHODE DISCHARGE DEVICES For ATOMIC ABSORPTION SPECTROSCOPY

This compilation is designed to aid the analyst in the selection of single-element hollow cathode devices for use in atomic absorption and other spectroscopic needs. The types are listed alphabetically. Numerical listing is on page 4. Data sheet ET-1553 describes the multi-element tubes.

OCTOBER 1967 LISTING

WESTINGHOUSE ELECTRIC CORPORATION, ELECTRONIC TUBE DIVISION, ELMIRA, NEW YORK

AVAILABLE TYPES

Westinghouse presently offers a wide selection of devices. Most elements are available with a choice of two gases (neon and argon) and two windows (quartz and Pyrex). For most atomic absorption analyses, one particular window and gas have been found to give more satisfactory results (maximum spectral output, minimum noise and interference, best sensitivity). This type is indicated (★) and normally will be available with the shortest delivery time. Requests for unlisted types are invited.

APPLICATIONS NOTES AND SPECIAL TYPES

The Westinghouse sealed-off tubes described herein have been specifically designed for use in atomic absorption. These same devices have been found useful in other fields of interest, but, in some cases, modifications may be desirable to make optimum use of the narrow line spectra of this type of device.

Westinghouse has designed unusual hollow cathode devices for special application, including demountable, cooled systems. Your inquiries are invited.

WINDOW

Two glasses are available on standard types. The transmission data shown in Figure 1 indicate that the range of interest in atomic absorption is well covered without the need for special UV windows.

Q – clear quartz, 1/16 inch thick
P – Pyrex 7740, 1/16 inch thick

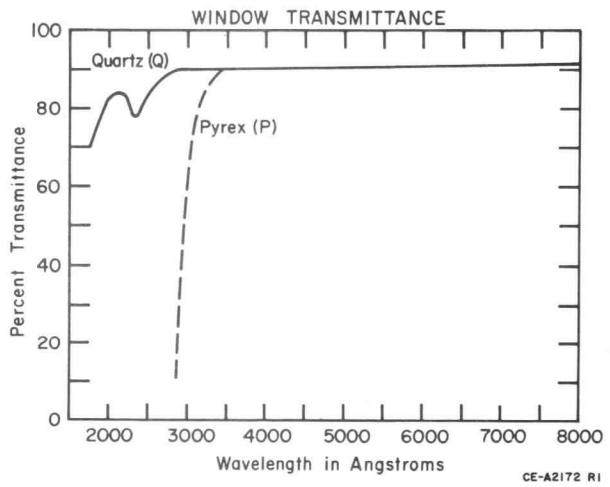

FIGURE 1

GAS

A – argon
N – neon

In general, neon will give the highest spectral output and devices containing it are recommended except where first or second order gas lines may cause interference with the elemental line used for analysis.

SIZE

See Figure 2. All Pyrex window tubes are Size A, 1-1/2 inch diameter window. Quartz window devices are available in 1 inch (B) or 1-1/2 inch (A) sizes. B size Quartz devices are less expensive, delivery is faster, and the loss of total light output because of the smaller diameter is not a problem as verified by tests in the equipment of all the major Atomic Absorption Spectroscopy manufacturers.

An adapter designed to mate the 1-1/2 inch tube body to the two inch mounts of some equipment is available at low cost. The use of a single adapter combined with the benefit of accurate cathode centering of Westinghouse tubes eliminates the need for multiple tube mounts which are presently specified by the manufacturer of some equipments. For additional information on the adapter, please request brochure ETD-6504.

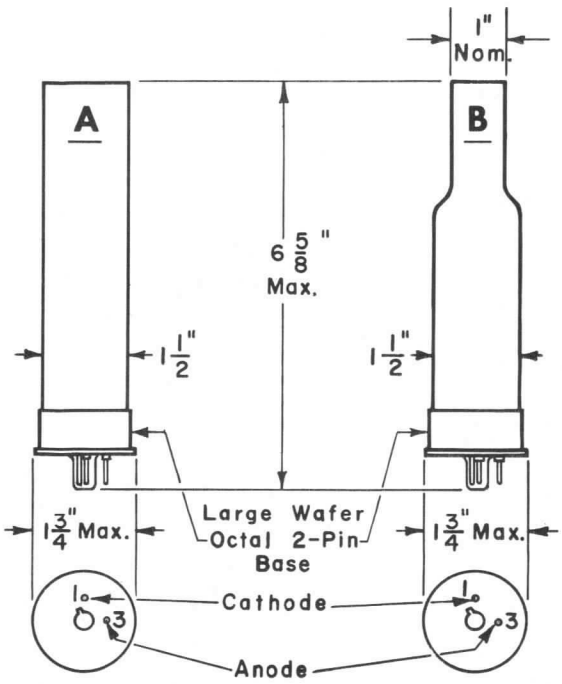

FIGURE 2

MAXIMUM CURRENT

This is the maximum d-c current which should be carried by the device. For applications where a-c is used, the peak current, as measured on an oscilloscope, should be limited to four (4) times the maximum d-c rating and a rectifier used to eliminate the inverse voltage. Maximum life will be attained when the device is operated at the lowest current which will give a satisfactory signal-to-background ratio.

OPERATING VOLTAGE

Typical voltage-current characteristics are shown in Figure 3. A value of approximate (± 25 volts) operating voltage at the maximum rated d-c current is given in the tables for each type. As most of the curves are quite vertical, this value can be used for the current range of interest.

A resistor must be connected in series with all hollow cathode tubes unless the equipment in use incorporates a method of stabilizing or limiting the current. With a 400 to 700 volt d-c power supply, the resistor(s) should be between 2000 and 50,000 ohms depending on the operating current desired. Too low a value of resistance may result in instability, so that a moderate voltage (500 volts) and a high resistance is to be preferred.

SPECTRAL CHARACTERISTICS

Data are provided in the tables for one or two lines which are normally used in atomic absorption spectroscopy. The spectra were obtained at or with less than the rated current with slits of 25 to 100 microns on an instrument with a reciprocal, linear dispersion of 16 A/mm. The bench marks at the base of the curves are 20A apart and the wavelengths of importance are labeled. The information shown graphically is for the tube indicated as the preferred (*) type.

RELATIVE LINE INTENSITY

For the convenience of persons using Westinghouse hollow cathode tubes for the first time or are trouble-shooting their equipment, relative intensities are given for most lines of interest in atomic absorption spectroscopy.

The data were obtained at rated tube current using a monochromator with a 30,000 line/inch grating giving a reciprocal linear dispersion of 16 A/mm and entrance and exit slit widths of 25 microns. The grating efficiency is shown in Figure 4. The lenses were made from "Suprasil glass" which is equivalent in transmission to the quartz of Figure 1. Most data were obtained with an R106 photomultiplier (S5 surface, quartz window) at 800 volts. In the red region where the R106 response is low, a 7102 photomultiplier (S1 surface, visible window) operated at 1300 volts was used; this voltage gave equivalent multiplication as compared to the R106 based on published data.

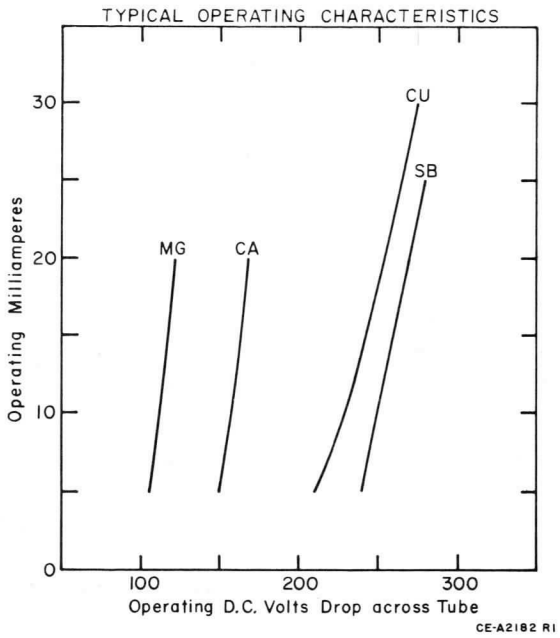

FIGURE 3

When referring to the data, the user is cautioned that the following will cause deviations from the data provided and should attempt to scale his results accordingly:

a) Photomultiplier surface, window and voltage

b) Optical efficiency of monochromator and associated optics

c) Grating size and efficiency (see Figure 4)

d) Slit widths (if varied from element to element)

e) Age and condition of the hollow cathode tube

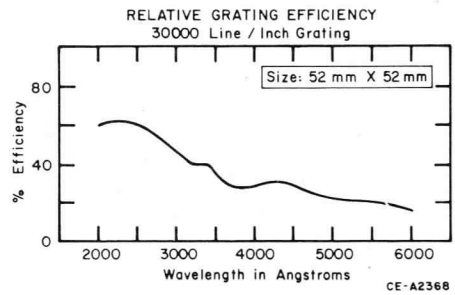

FIGURE 4

NUMERICAL LISTING OF WESTINGHOUSE HOLLOW-CATHODE DEVICES

★- Preferred type with shortest delivery time.
A- (after type number)—High spectral output.

TYPE NUMBER	CATHODE ELEMENT
WL-22602	Iron
WL-22603	Copper
WL-22605	Nickel
WL-22606	Copper
WL-22607	Zinc
WL-22608	Manganese
WL-22609	Magnesium
WL-22610	Calcium
WL-22611	Iron
WL-22663	Nickel
WL-22804	Aluminum
WL-22805	Molybdenum
WL-22806	Silver
WL-22809	Aluminum
WL-22810A	Iron
WL-22811A	Zinc
WL-22812	Chromium
WL-22813	Cobalt
WL-22814	Cobalt
WL-22815	Manganese
WL-22816	Cadmium
WL-22817	Cesium
WL-22818	Samarium
WL-22819A	Nickel
WL-22820	Iron
WL-22821	Chromium
WL-22822	Tin
WL-22823	Cesium
WL-22824	Rubidium
WL-22825	Nat. Lithium
WL-22826	Uranium
WL-22827	Dysprosium
WL-22828	Erbium
WL-22829	Holmium
WL-22830	Lithium –6
WL-22831	Lithium –7
WL-22832	Silicon
WL-22833	Gallium
WL-22834	Barium
WL-22835A	Strontium
WL-22836	Arsenic
WL-22837	H.P. Iron
WL-22838	Lead
WL-22839	Gold
WL-22840	Antimony
WL-22841	Bismuth
WL-22842	Tellurium
WL-22843	Selenium
WL-22844	Tungsten
WL-22845A	Europium
WL-22846	Lanthanum
WL-22847	Mercury
WL-22848	Terbium
WL-22849	Tungsten
WL-22850	Rhodium
WL-22851A	Platinum
WL-22856	Vanadium
WL-22857	Palladium
WL-22858A	Niobium
WL-22859A	Tantalum
WL-22860	Zirconium
WL-22863A	Potassium
WL-22867	Indium
WL-22870	Aluminum
WL-22872	Antimony
WL-22873	Arsenic
WL-22874	Bismuth
WL-22875	Cadmium
WL-22876	Manganese
WL-22877	Chromium
WL-22878	Cobalt
WL-22879	Copper
WL-22880	Dysprosium
WL-22881	Erbium
WL-22882	Europium
WL-22883	Gold
WL-22884	Gallium
WL-22885	Holmium
WL-22886	Iron
WL-22887	Iron
WL-22888	H.P. Iron
WL-22889	Lanthanum
WL-22890	Lead
WL-22891	Magnesium
WL-22892	Mercury
WL-22893	Molybdenum
WL-22894	Nickel
WL-22895	Nickel
WL-22896	Platinum
WL-22897	Rhodium
WL-22898	Selenium
WL-22899	Samarium
WL-22900	Silicon
WL-22901	Silver
WL-22902	Tellurium
WL-22903	Terbium
WL-22904	Tin
WL-22905	Tungsten
WL-22906	Tungsten
WL-22907	Uranium
WL-22908	Zinc
WL-22909	Zinc
WL-22910	Vanadium
WL-22911	Palladium
WL-22912	Niobium
WL-22913	Tantalum
WL-22914	Zirconium
WL-22915	Indium
WL-22916A	Boron
WL-22917	Boron
WL-22925	Lithium –6
WL-22926	Lithium –7
WL-22927A	Lead
WL-22928A	Cobalt
WL-22929	Aluminum
WL-22931	Antimony
WL-22932	Bismuth
WL-22933A	Cadium
WL-22934A	Chromium
WL-22935	Gold
WL-22936	Manganese
WL-22937A	Molybdenum
WL-22938	Selenium
WL-22939A	Silicon
WL-22940	Tellurium
WL-22941A	Tin
WL-22942A	Rhenium
WL-22951	Magnesium
WL-22952	Lead
WL-22953	Cobalt
WL-22954	Aluminum
WL-22956	Antimony
WL-22957	Bismuth
WL-22958	Cadmium
WL-22959	Chromium
WL-22960	Gold
WL-22961	Manganese
WL-22962	Molybdenum
WL-22963	Selenium
WL-22964	Silicon
WL-22965	Tellurium
WL-22966	Tin
WL-22967	Rhenium
WL-22968	Magnesium
WL-22969	Palladium
WL-22970	Palladium
WL-22971	Tantalum
WL-22972	Tantalum
WL-22973	Vanadium
WL-22974	Vanadium
WL-22975	Gadolinium
WL-22976	Yttrium
WL-22977	Cerium
WL-22978	Cerium
WL-22979	Neodymium
WL-22980	Neodymium
WL-22981	Praseodymium
WL-22982	Praseodymium
WL-22983	Ytterbium
WL-22984	Ytterbium
WL-22985	Gadolinium
WL-22986	Gadolinium
WL-22987	Yttrium
WL-22988	Yttrium
WL-22989	Phosphorus
WL-22990	Phosphorus
WL-22991	Titanium
WL-22992	Titanium
WL-22996	Indium
WL-22997A	Rhodium
WL-22998	Zirconium
WL-23007	Thulium
WL-23008	Thulium
WL-23009	Lutetium
WL-23010	Lutetium
WL-23027	Thorium
WL-23028	Thorium
WL-23041	Copper
WL-23042	Copper
WL-23046	Rubidium
WL-23049	Lanthanum
WL-23059A	Sodium
WL-23060A	Nat. Lithium
WL-23115	Nat. Lithium
WL-23138	Ruthenium
WL-23143	Sulphur
WL-23144	Osmium
WL-23145	Iridium
WL-23160	Germanium
WL-23180	Hafnium
WL-23181	Scandium

Note: Because of constant improvement and changes being made in hollow cathode devices, *the current rating on each tube label should take precedence over the value listed in this data sheet.*

CATHODE ELEMENT & TYPES	WINDOW GAS FILL & SIZE	MAX. CURR. mA	TUBE DROP VOLTS	ANALY LINES A	INTENS IN 10^{-9} AMP.
Aluminum					
WL-22804	Q-A-B	20		3092	3000
*WL-22809	P-N-A	20	170	3962	1800
WL-22929	Q-N-B	20			
WL-22954	Q-N-A	20			
WL-22870	Q-A-A	20			
Antimony					
WL-22840	Q-A-B	25		2176	60
*WL-22931A	Q-N-B	25	200	2311	60
WL-22956	Q-N-A	25			
WL-22872	Q-A-A	25			
Arsenic					
*WL-22836	Q-N-B	20	290	1937	20
WL-22873	Q-N-A	20		1972	20
Barium					
*WL-22834	P-N-A	25	210	5536	400
Bismuth					
WL-22841	Q-A-B	12		2231	150
WL-22874	Q-A-A	12		3068	1000
*WL-22932	Q-N-B	12	240		
WL-22957	Q-N-A	12			
Boron					
*WL-22916A	Q-A-B	20	330	2497	400
WL-22917	Q-A-A	20			

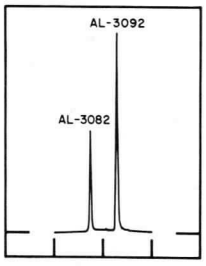

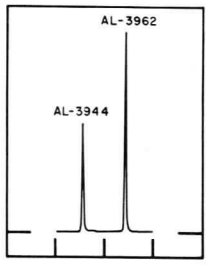

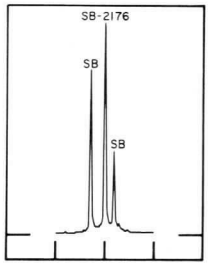

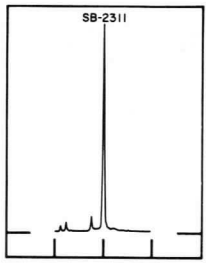

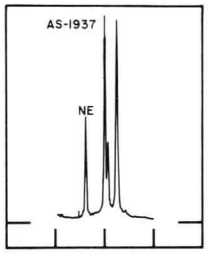

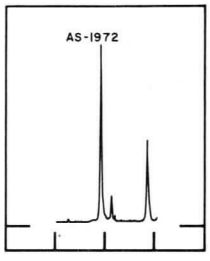

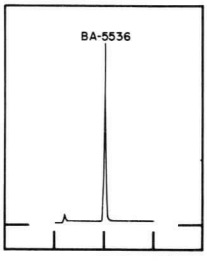

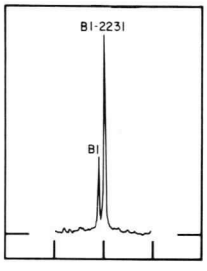

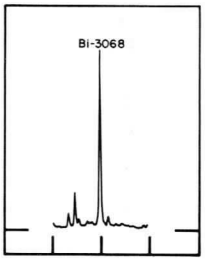

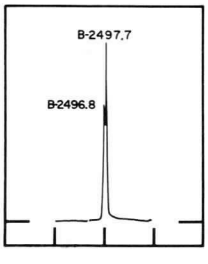

Westinghouse

CATHODE ELEMENT & TYPES	WINDOW GAS FILL & SIZE	MAX. CURR. mA	TUBE DROP VOLTS	ANALY LINES A	INTENS IN 10^{-9} AMP.
Cadmium					
WL-22816	Q-A-B	12		2288	1000
WL-22875	Q-A-A	12		3261	3000
★WL-22933A	Q-N-B	12	260		
WL-22958	Q-N-A	12			
Calcium					
★WL-22610	P-N-A	20	160	4227	1400
Cerium					
★WL-22977	Q-N-B	20	160	–	–
WL-22978	Q-N-A	20			
Cesium					
WL-22817	P-A-A	25		4556	50
★WL-22823	P-N-A	25	140	8521	15
Chromium					
WL-22812	P-A-A	20		3579	10000
WL-22821	Q-A-B	20		4254	6000
WL-22877	Q-A-A	20			
★WL-22934A	Q-N-B	20	180		
WL-22959	Q-N-A	20			
Cobalt					
WL-22813	P-A-A	20		2407	2000
WL-22814	Q-A-B	20		3454	6000
★WL-22928A	Q-N-B	20	200	3527	5000
WL-22953	Q-N-A	20			
WL-22878	Q-A-A	20			

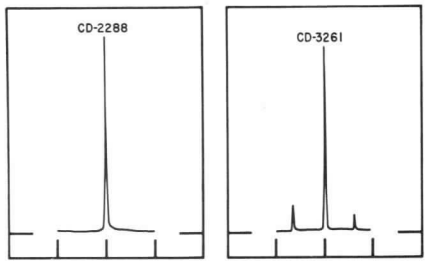

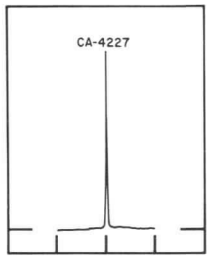

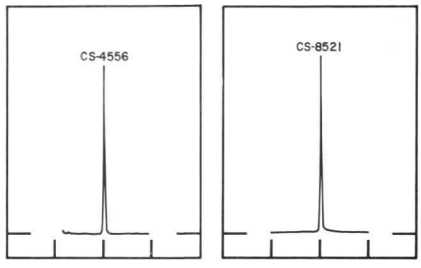

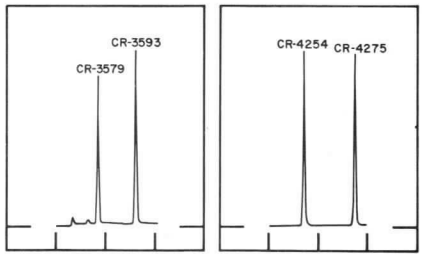

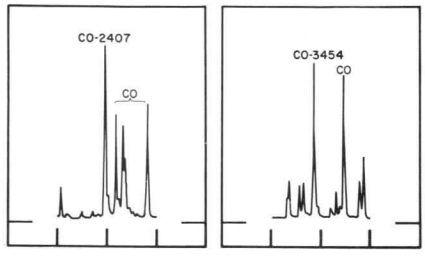

CATHODE ELEMENT & TYPES	WINDOW GAS FILL & SIZE	MAX. CURR. mA	TUBE DROP VOLTS	ANALY LINES A	INTENS IN 10^{-9} AMP.
Copper					
*WL-22603	P-N-A	20	230	3247	10000
WL-22606	Q-A-B	20		3274	10000
WL-22879	Q-A-A	20			
WL-23041	Q-N-B	20			
WL-23042	Q-N-A	20			
Dysprosium					
*WL-22827	Q-N-B	15	140	4046	5000
WL-22880	Q-N-A	15		4187	5000
Erbium					
*WL-22828	Q-N-B	15	140	4008	4500
WL-22881	Q-N-A				
Europium					
*WL-22845A	Q-N-B	10	180	4594	1500
WL-22882	Q-N-A	10		4627	1400
Gadolinium					
WL-22975	P-N-A	20		3684	700
*WL-22985	Q-N-B	20	140		
WL-22986	Q-N-A	20			
Gallium					
*WL-22833	Q-N-B	15	250	2874	600
WL-22884	Q-N-A	15		4172	1600

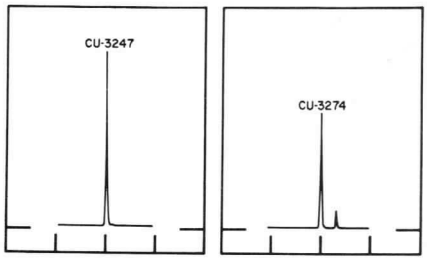

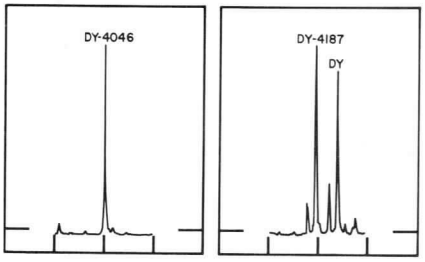

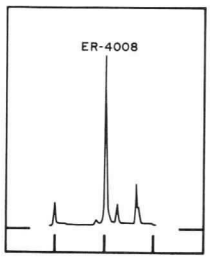

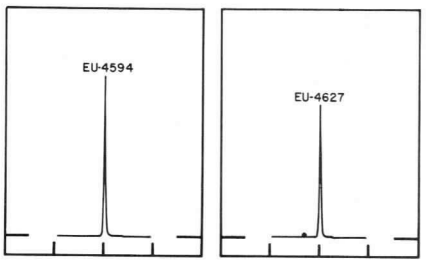

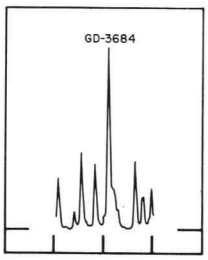

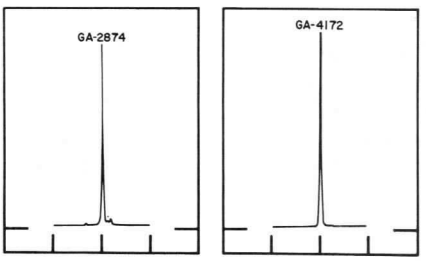

Westinghouse

CATHODE ELEMENT & TYPES	WINDOW GAS FILL & SIZE	MAX. CURR. mA	TUBE DROP VOLTS	ANALY LINES A	INTENS IN 10^{-9} AMP.
Germanium					
*WL-23160	Q-A-B	20	350	2651	140
Gold					
WL-22839	Q-A-B	15		2428	750
WL-22883	Q-A-A	15		2676	1200
*WL-22935	Q-N-B	15	260		
WL-22960	Q-N-A	15			
Hafnium					
*WL-23180	Q-N-B	18	190	3072	250
				2866	140
Holmium					
*WL-22829	Q-N-B	15	140	4054	3000
WL-22885	Q-N-A	15		5983	40
Indium					
WL-22867	Q-A-B	20		3040	500
WL-22915	Q-A-A	20			
*WL-22996	Q-N-B	20	280		
Iridium					
*WL-23145	Q-N-B	25	220	2850	700

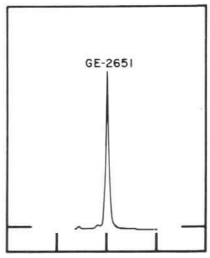

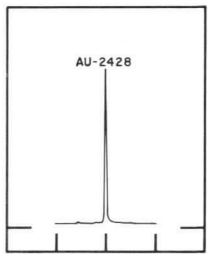

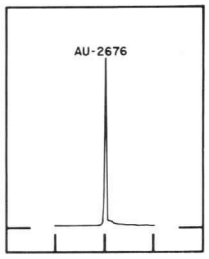

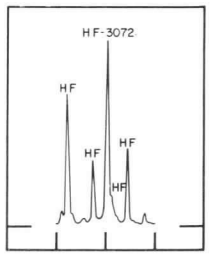

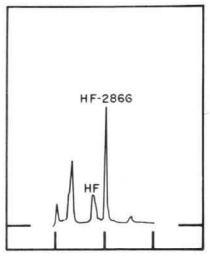

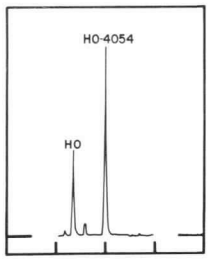

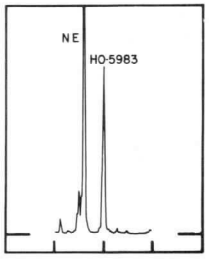

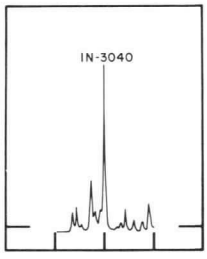

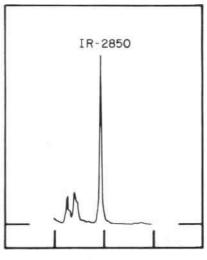

CATHODE ELEMENT & TYPES	WINDOW GAS FILL & SIZE	MAX. CURR. mA	TUBE DROP VOLTS	ANALY LINES A	INTENS IN 10^{-9} AMP.
Iron					
WL-22602	P-A-A	20		2483	1200
WL-22820	P-N-A	20		3720	8000
WL-22611	Q-A-B	20			
WL-22886	Q-A-A	20			
*WL-22810A	Q-N-B	20	180		
WL-22887	Q-N-A	20			
High Purity Iron					
*WL-22837	Q-N-B	20	180	2483	1200
WL-22888	Q-N-A	20		3720	8000
Lanthanum					
WL-22846	Q-A-B	15		5501	120
WL-22889	Q-A-A	15		3928	45
*WL-23049	Q-N-B	15	170		
Lead					
WL-22838	Q-A-B	10		2170	200
WL-22890	Q-A-A	10		2833	1800
*WL-22927A	Q-N-B	10	290		
WL-22952	Q-N-A	10			
Lithium *(See Note)*					
(Natural)					
WL-22825	P-A-A			6708	15
WL-23115	Q-A-B				
*WL-23060A	P-N-A	15	150		
Lithium-6 *(See Note)*					
*WL-22830	P-N-A	30	280	6708	4
WL-22925	P-A-A	30			
Lithium-7 *(See Note)*					
*WL-22831	P-N-A	30	280	6708	4
WL-22926	P-A-A	30			

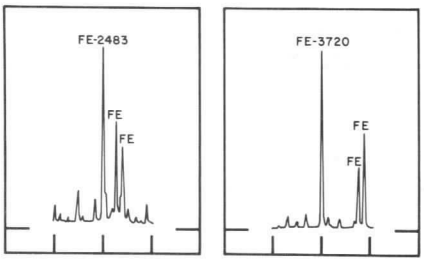

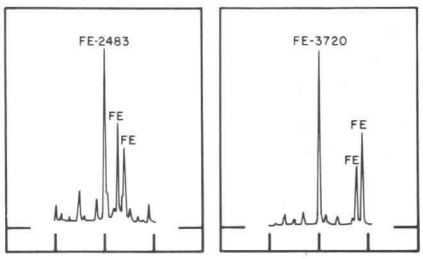

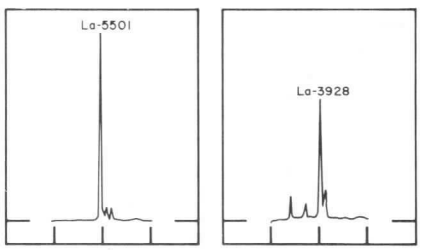

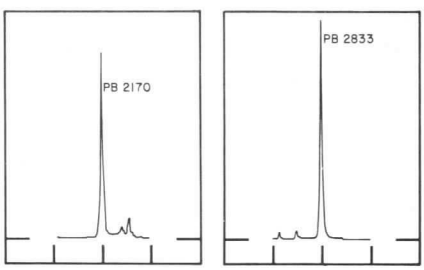

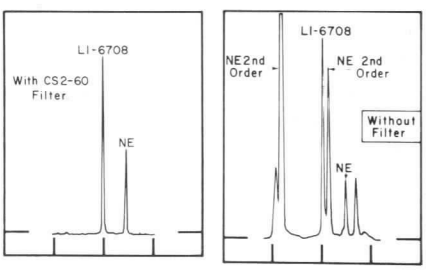

LITHIUM NOTE

Output from a Lithium cathode tube with neon fill will experience second-order interference from the Ne-3355 line. However, operation with any one of the Corning Glass sharp-cutoff filters listed below will eliminate the interference and is to be preferred over the argon-filled tube.

CS 2-58	*CS 2-61*	*CS 3-66*	*CS 3-68*
CS 2-59	*CS 2-62*	*CS 3-67*	*CS 3-69*
CS 2-60	*CS 2-63*		

Westinghouse

CATHODE ELEMENT & TYPES	WINDOW GAS FILL & SIZE	MAX. CURR. mA	TUBE DROP VOLTS	ANALY LINES A	INTENS IN 10^{-9} AMP.
Lutetium					
***WL-23009**	Q-N-B	20	190	3081	30
WL-23010	Q-N-A	20		3282	90
Magnesium					
WL-22609	Q-A-B	20		2025	400
WL-22891	Q-A-A	20		2852	20000
***WL-22968**	Q-N-B	20	120		
WL-22951	Q-N-A	20			
Manganese					
WL-22608	Q-A-B	25		2795	5000
WL-22876	Q-A-A	25		2801	5000
WL-22815	P-A-A	25			
***WL-22936**	Q-N-B	25	200		
WL-22961	Q-N-A	25			
Mercury					
***WL-22847**	Q-A-B	15	250	2537	2000
WL-22892	Q-A-A	15			
Molybdenum					
WL-22805	Q-A-B	30		3133	4000
WL-22893	Q-A-A	30		3170	2000
***WL-22937A**	Q-N-B	30	150		
WL-22962	Q-N-A	30			
Neodymium					
***WL-22979**	Q-N-B	20	180	4925	300
WL-22980	Q-N-A	20			

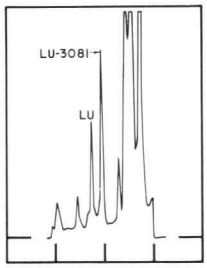

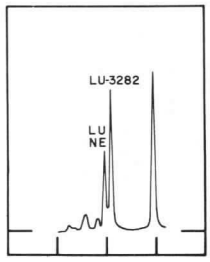

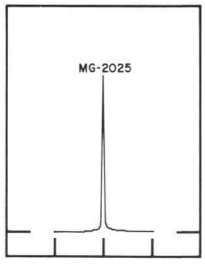

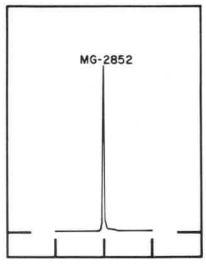

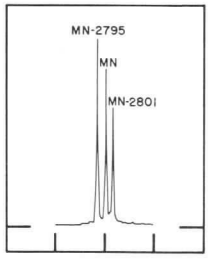

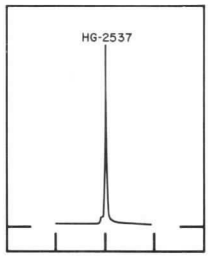

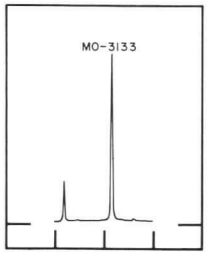

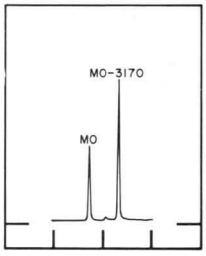

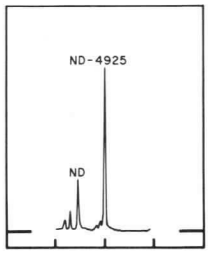

CATHODE ELEMENT & TYPES	WINDOW GAS FILL & SIZE	MAX. CURR. mA	TUBE DROP VOLTS	ANALY LINES A	INTENS IN 10^{-9} AMP.
Nickel					
WL-22605	P-A-A	20		2320	1500
WL-22663	Q-A-B	20		3415	3000
WL-22894	Q-A-A	20			
★WL-22819A	Q-N-B	20	200		
WL-22895	Q-N-A	20			
Niobium (Columbium)					
★WL-22858A	Q-N-B	25	200	4059	500
WL-22912	Q-N-A	25		4080	400
Osmium					
★WL-23144	Q-A-B	20	320	2909	800
				3018	400
Palladium					
WL-22857	Q-A-B	25		2448	400
WL-22911	Q-A-A	25		2476	200
★WL-22969	Q-N-B	25	180	3404	3000
WL-22970	Q-N-A	25			
Phosphorus					
★WL-22989	Q-N-B	20	280		
WL-22990	Q-N-A	20			
Platinum					
★WL-22851A	Q-A-B	25	320	2659	800
WL-22896	Q-A-A	25			

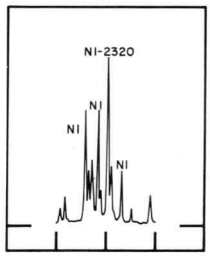

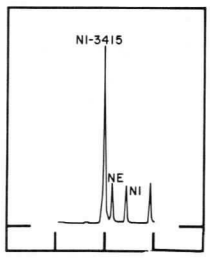

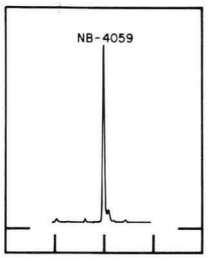

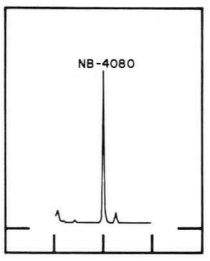

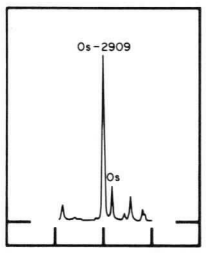

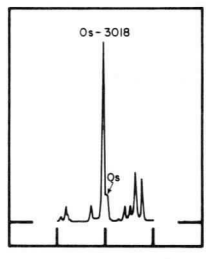

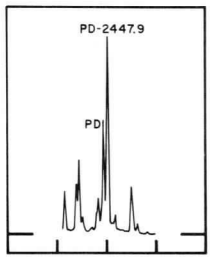

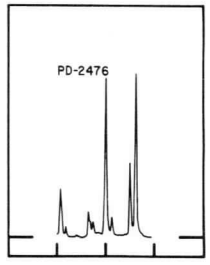

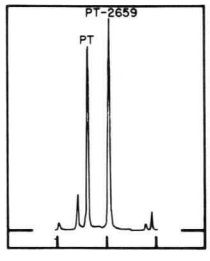

Westinghouse®

CATHODE ELEMENT & TYPES	WINDOW GAS FILL & SIZE	MAX. CURR. mA	TUBE DROP VOLTS	ANALY LINES A	INTENS IN 10^{-9} AMP.
Potassium					
★WL-22863A	P-N-A	12	115	4044 7665	500 15
Praseodymium					
★WL-22981	Q-N-B	20	150	4951	300
WL-22982	Q-N-A	20		5133	200
Rhenium					
★WL-22942A	Q-N-B	20	230	3460	2400
WL-22967	Q-N-A	20		3465	1600
Rhodium					
WL-22850	Q-A-B	15		3435	3000
WL-22897	Q-A-A	15		3692	3000
★WL-22997A	Q-N-B	15	170		
Rubidium					
★WL-22824	P-N-A	30	180	7800	13
WL-23046	Q-N-B	30			
Ruthenium					
★WL-23138	Q-A-B	25	400	3499	80

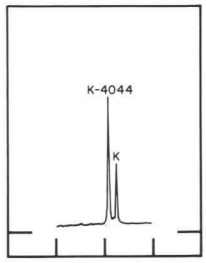

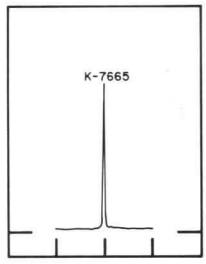

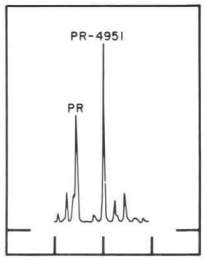

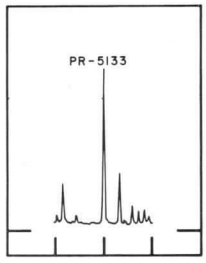

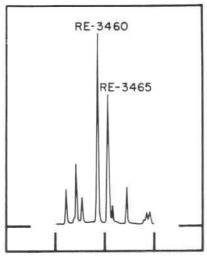

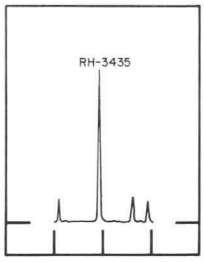

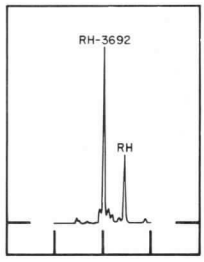

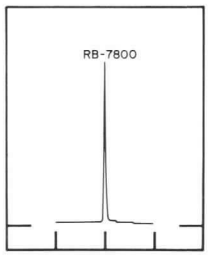

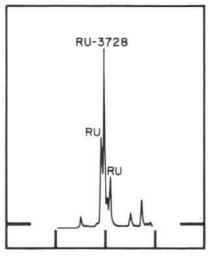

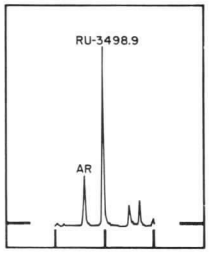

CATHODE ELEMENT & TYPES	WINDOW GAS FILL & SIZE	MAX. CURR. mA	TUBE DROP VOLTS	ANALY LINES A	INTENS IN 10^{-9} AMP.
Samarium					
***WL-22818**	Q-N-B	20	160	3951	300
WL-22899	Q-N-A	20		4760	600
Scandium					
WL-23181	Q-N-B	20	150	3912	7000
				3907	5800
Selenium					
WL-22843	Q-A-B	15		1960	17
WL-22898	Q-A-A	15		2040	17
***WL-22938**	Q-N-B	15	300		
WL-22963	Q-N-A	15			
Silicon					
WL-22832	Q-A-B	20		2516	400
WL-22900	Q-A-A	20			
***WL-22939A**	Q-N-B	20	210		
WL-22964	Q-N-A	20			
Silver					
***WL-22806**	Q-A-B	20	250	3281	10000
WL-22901	Q-A-A	20		3383	10000
Sodium					
***WL-23059A**	P-N-A	12	230	3302	200
				5890	600

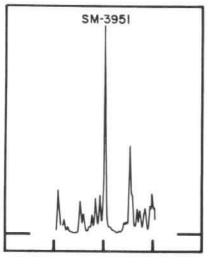

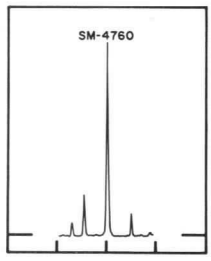

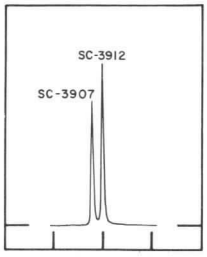

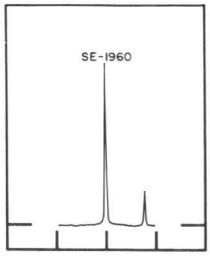

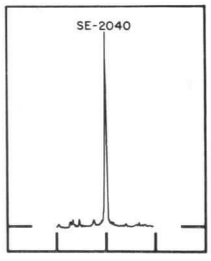

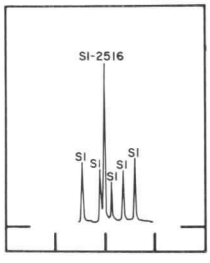

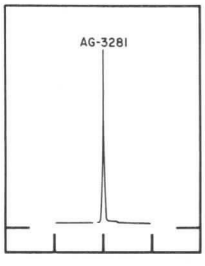

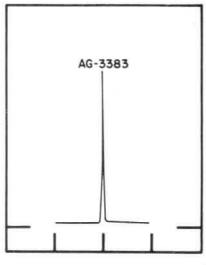

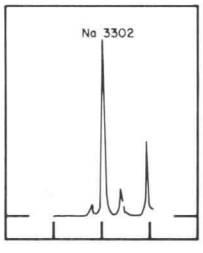

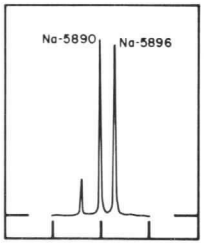

CATHODE ELEMENT & TYPES	WINDOW GAS FILL & SIZE	MAX. CURR. mA	TUBE DROP VOLTS	ANALY LINES A	INTENS IN 10^{-9} AMP.
Strontium					
★WL-22835A	P-N-A	25	230	4607	600
Sulphur					
★WL-23143	Q-N-B	20	280		
Tantalum					
★WL-22859A	Q-A-B	25		3311	600
WL-22913	Q-A-A	25			
WL-22971	Q-N-B	25	200		
WL-22972	Q-N-A	25			
Tellurium					
WL-22842	Q-A-B	15		2143	40
WL-22902	Q-A-A	15		2386	28
★WL-22940	Q-N-B	15	260		
WL-22965	Q-N-A	15			
Terbium					
★WL-22848	Q-N-B	25	250	4319	100
WL-22903	Q-N-A	25		4338	70
Thorium					
★WL-23027	Q-N-B	20	180		
WL-23028	Q-N-A	20			

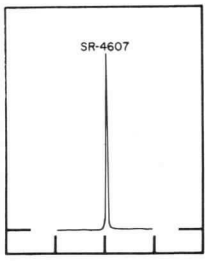

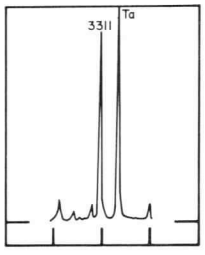

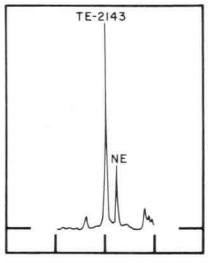

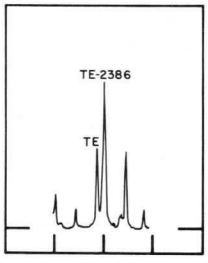

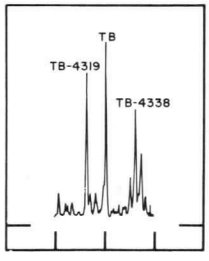

CATHODE ELEMENT & TYPES	WINDOW GAS FILL & SIZE	MAX. CURR. mA	TUBE DROP VOLTS	ANALY LINES A	INTENS IN 10^{-9} AMP.	
Thulium						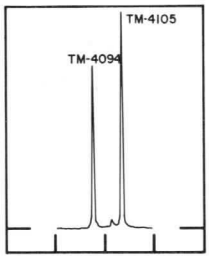
*WL-23007	Q-N-B	20	250	4094	80	
WL-23008	Q-N-A	20		4105	100	
Tin						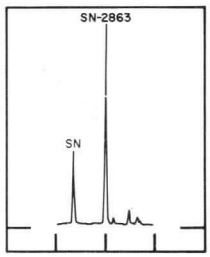
WL-22822	Q-A-B	15		2863	140	
WL-22904	Q-A-A	15				
*WL-22941A	Q-N-B	15	230			
WL-22966	Q-N-A	15				
Titanium						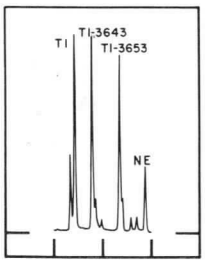 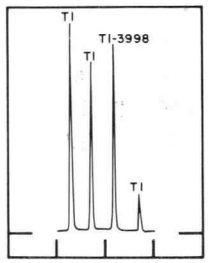
*WL-22991	Q-N-B	25	170	3643	1000	
WL-22992	Q-N-A	25		3998	1000	
Tungsten						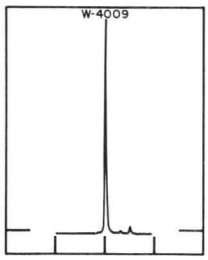 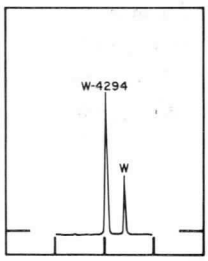
*WL-22844	Q-N-B	30	150	4009	2000	
WL-22905	Q-N-A	30		4294	1200	
WL-22849	Q-A-B	30				
WL-22906	Q-A-A					
Uranium						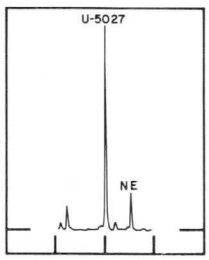 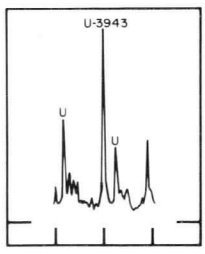
*WL-22826	Q-N-B	25	200	5027	600	
WL-22907	Q-N-A	25		3943	250	
Vanadium						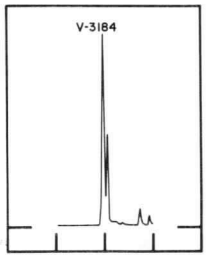 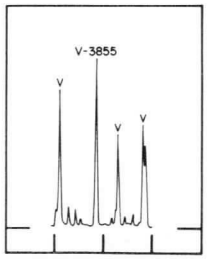
WL-22856	Q-A-B	25		3184	4000	
WL-22910	Q-A-A	25		3855	1000	
*WL-22973	Q-N-B	25	180			
WL-22974	Q-N-A	25				

Westinghouse

CATHODE ELEMENT & TYPES	WINDOW GAS FILL & SIZE	MAX. CURR. mA	TUBE DROP VOLTS	ANALY LINES A	INTENS IN 10^{-9} AMP.
Ytterbium					
* WL-22983	Q-A-B	12	130	3988	2500
WL-22984	Q-A-A	12			
Yttrium					
WL-22976	P-N-A	12		4077	900
* WL-22987	Q-N-B	12	130	4102	1100
WL-22988	Q-N-A	12			
Zinc					
WL-22607	Q-A-B	15		2139	3500
WL-22908	Q-A-A	15		3076	2700
★ WL-22811A	Q-N-B	15	230		
WL-22909	Q-N-A	15			
Zirconium					
* WL-22860	Q-A-B	25	150	3601	500
WL-22914	Q-A-A	25		3519	400
WL-22998	Q-N-B	25			

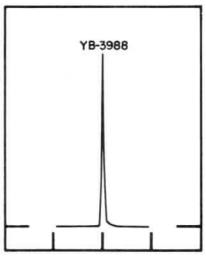

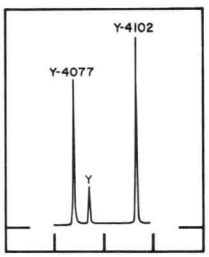

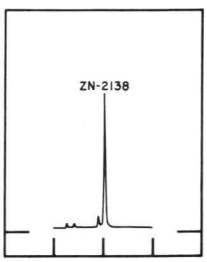

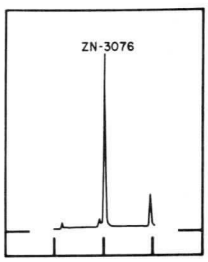

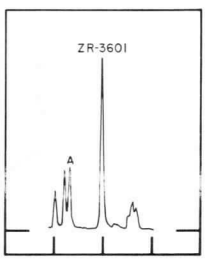

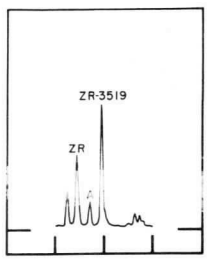

ET-1532

The information contained herein is supplied without assuming responsibility for infringement of patents or other rights of third parties which may result from its use. No license is granted by implication or otherwise under any patent or patent rights of Westinghouse Electric Corporation.

PRODUCT ENGINEERING MEMO

ETD-6604
September 1966

RECENT DEVELOPMENTS IN HOLLOW CATHODE TUBES

by
W. Gillies
G. Yamasaki
J. C. Burger

Presented at the Society for Applied Spectroscopy,
Fifth National Meeting, Chicago, Illinois, June 1966.

Summary

Comparative intensity and absorbance data are presented for various types of hollow cathode structures. It is concluded that the Westinghouse shielded design is far superior to the original open structure and the high intensity designs do not offer any great advantage. High intensity tubes may also be economically unfavorable because of high initial cost, extra power supplies, and shorter life.

INTRODUCTION

In the past two years, there has been considerable interest in improving the spectral output characteristics of hollow cathode tubes used in atomic absorption spectroscopy. The efforts have placed emphasis on increasing the intensity of the absorbing line and minimizing interference radiation, primarily from non-absorbing lines, through the use of high intensity or high brightness tubes. In this paper, we would like to examine the spectral characteristics of several types of hollow cathode tubes in some detail and to compare the results when used in atomic absorption spectroscopy

SPECTRAL CHARACTERISTICS

Three basic types of hollow cathode devices have evolved in the few years since Alan Walsh pioneered the development of atomic absorption spectroscopy.

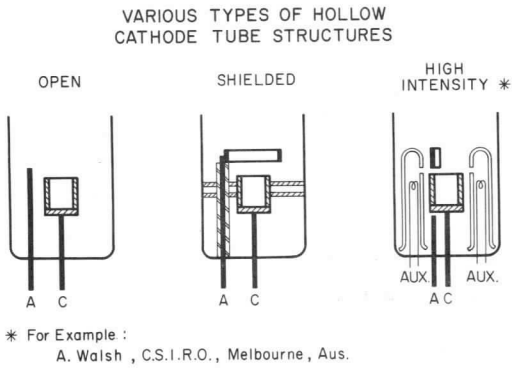

FIGURE 1

These are shown in Figure 1. The original sealed-off device was an offshoot of the spectral source discovered by Paschen in 1916. We have elected to call this device an open structure. In the open structure, the cathode is completely exposed, permitting undesirable discharges between the anode and the outer surface of the cathode and its support structure. The hollow is a much more efficient producer of useful spectra than outer cathode surfaces. Therefore, any external discharges will reduce device efficiency and, together with other factors. cause the open type to have a number of limitations:

1) low line brightness
2) relatively short life
3) poor utilization of total cathode current
4) poor resonance to ion line intensity ratio with some elements in the bandpasses normally used.

To overcome some of these limitations, a second generation of devices emerged which shielded all cathode areas except the front face and cathode hole. Early models of this type used an insulating sleeve around the cathode. Later improvements[1] provided further electrical shielding of the anode and cathode leads and added mechanical strength to the assembly. This type of structure gives higher intensity, better efficiency, and longer life because the tube current is directed into the hollow with very little external loss.

To overcome the ion line interference problem associated with the open structure design, Walsh and his associates[2] generated what is called a high intensity device. In this design the cathode again has an open structure, but also included are two extra auxiliary electrodes capable of being electrically heated. These are designed to permit the passage of a high booster current across the surface of the cathode. Perkin-Elmer has developed a number of modifications of this device, and has reported data on the spectral characteristics in much more detail than the original investigators[3].

Due to the disadvantages of the C.S.I.R.O. design, such as the extra power supply needed, the high auxiliary current required, high cost, and lack of data on life[4], we have been somewhat reticent to agree that such a device is the best solution to the basic problem. In addition, we would be remiss if we did not provide intensity and absorbance information on the shielded structure for comparison with other devices. Our own high intensity work has led to devices which can be used with presently-employed power supplies, but the work is still under evaluation and the structural details cannot be made available at this time. With your indulgence, however, we will report the results and, as you will see, the data compare favorably with other high intensity tubes. For this presentation, nickel data were chosen because of the availability of comparative information, and because of the problems this element has caused in trace determinations on some equipments.

Figure 2 shows the spectral characteristics of open, shielded, and high intensity types for nickel tubes in the region of the 2320A line. It can be seen that the spectra is complex for all types, and at least one nickel ion-line, at 2316A is separated using this bandpass.

As reported by Perkin-Elmer in their Atomic Absorption Newsletter, Vol. 5, No. 2, there is also an unresolved Ni II line at 2319.76A, which would contribute to bending of the absorbance curves using normal bandpasses. In addition, in the shielded and high intensity types, there is an improvement in the ratio of intensities of the 2320A ground state and 2316A ion lines, and it is to be expected that a similar gain would be made in the 2320.03/2319.76 ratio; thus resulting in straightened absorbance curves.

In order to evaluate the three types of structures, we would like to first look at the intensity data and then at the atomic absorption results. Figure 3 summarizes the data obtained in our intensity tests, together with Perkin-Elmer information, as referenced. We did not have actual photomultiplier output data on the Perkin-Elmer high intensity tube, so the assumption was made that the Perkin-Elmer tube, without booster discharge, had the same order of intensity as the Westinghouse open structure. The basic design of the Westinghouse open structure and the Perkin-Elmer high brightness tube without auxiliary electrodes would be similar, if Perkin-Elmer built their tubes according to Walsh's teachings. With no booster current, the Westinghouse high intensity tube reflects a decrease in 2320A output from the Westinghouse shielded structure due to necessary design modification.

SPECTRA OF VARIOUS NICKEL HOLLOW CATHODE TUBE STRUCTURES

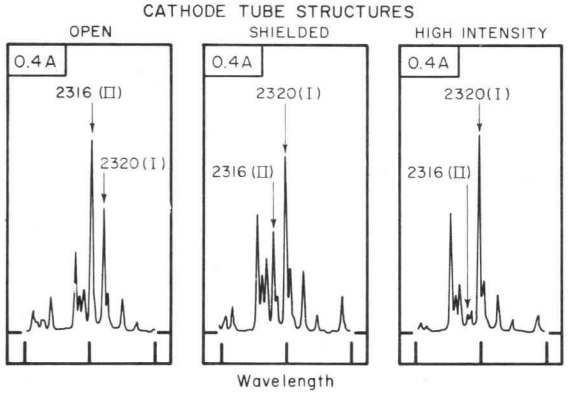

FIGURE 2

OUTPUT AND RELATIVE LINE INTENSITIES OF VARIOUS NICKEL HOLLOW CATHODE TUBE STRUCTURES

	TYPE OF STRUCTURE ♦			
	Open	(W) Shielded	High Intensity (W)	High Intensity P. E.
Ni 2320 Intensity (Normal Mode)	$2 \cdot 10^{-5}$ Amp	$1.5 \cdot 10^{-5}$ Amp	$6 \cdot 10^{-5}$ Amp	$2 \cdot 10^{-5}$ Amp *
Ni 2320 Intensity (Booster Mode)	–	–	$2 \cdot 10^{-5}$ Amp	$1.6 \cdot 10^{-5}$ Amp
Ni 2320 Intensity Gain	–	–	3.3	7.8 ■
Ratio 2320/2316	0.8	2.0	9 - 10	9.3 ■

* Assumed Equal To W Open Type
■ P. E. AAS Newsletter, Vol. 5, No. 2, P. 24 (Cathode Current - 20 mA., Booster Current - 320 mA.)
♦ All Data At Cathode Current Of 20 mA. And Bandpass Of 1.0 A (P. E.) Or 1.6 A (W)

FIGURE 3

The important data to be seen in this table are the 2320A intensity information and the 2320 ground state to 2316 ion line ratio. It should be recognized that an improvement in the Ni I/Ni II ratio would be of little benefit if the nickel resonance line intensity was so low as to be unusable because of basic signal-to-system noise limitions. Note that the shielded structure, without need for an auxiliary power supply is comparable in 2320A output to the high intensity tubes. As previously discussed, the high boosting currents required for commercially available high intensity designs may cause shorter tube life. This could be a decided economic disadvantage in view of their high cost. As a further word on intensity, limited data on a Perkin-Elmer 303 has shown the open structure to have a poor signal-to-system noise ratio, while the Westinghouse shielded and Westinghouse high intensity ratios exceed 100 to one. We feel this data establishes that the standard, shielded structure has sufficient output without the need for further intensification. However, if added gains are found to be necessary, they should be effected, whenever possible, within the power supply capabilities of present instrumentation.

In our work on high intensity tubes, most designs gave about the same gain in 2320 intensity, but the Ni I/Ni II line intensity ratio was variable with many parameters. Our later models give ratios of 9-10 as shown. It is interesting to note that the ratio in the standard, shielded design is more than twice that of the open structure.

ABSORBANCE AS A FUNCTION OF DEVICE TYPE

There is no doubt that suppression of the Ni II lines contributes to the improvement of the absorbance working curve. However, if the Ni I/Ni II ratio is the only criterion for improved absorption, then the ratio can be achieved without the need for an additional electrode system. Figure 4 shows the spectra of a conventional,

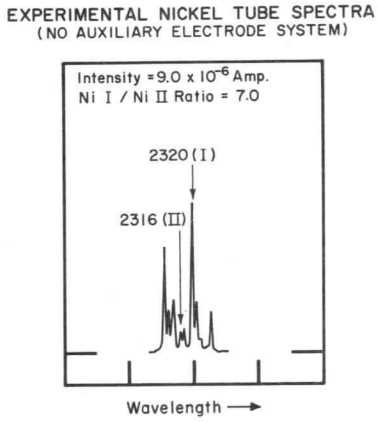

FIGURE 4

shielded, nickel hollow cathode tube of a modified design, presently under investigation, which achieves the desired results without an auxiliary electrode system. Notice the 2320A line intensity is about one-half that of the high intensity tube, and the Ni I/Ni II ratio is 7 instead of 9-10 times. This trace, taken at a total tube current of 15 milliamperes, compares favorably with other published results on high intensity tubes which require a cathode current of 20 milliamperes and a booster current of 320 milliamperes. The data in Figure 5 show that the open structure is inferior in characteristics, and there is not much difference between shielded and high intensity tubes for the bandpass chosen until higher absorbance values are reached. As absorbance is a logarithmic function, an absorbance value of 2.0 represents 99% absorption and there is some doubt concerning the accuracy of values greater than this.

ABSORBANCE AS A FUNCTION OF BANDPASS FOR VARIOUS TYPES

The next few figures examine in further detail what happens to the working curves as the bandpass is varied. It is evident from the preceding discussion that the Ni I/Ni II ratio will have some effect on the curves. In addition, the sensitivities of neighboring ground state lines are much less than the 2320A line as may be seen in Figure 6; therefore, the integrated absorbance for widened bandpasses will show a reduction in sensitivity. It is obvious that wider bandpasses will also contribute additional background radiation.

Figure 7 shows that for the open structure, not much gain is made as the bandpass is narrowed, and great losses are sustained as the bandpass is increased because of the poor Ni I/Ni II ratio and the reduced sensitivities of other adjacent, absorbing lines. Figure 8 shows the detailed spectra as a function of increasing bandpass. It can be seen that for an 8A bandpass, the 2320A and 2316A lines are completely unresolved.

The shielded structure (Figure 9) gives better linearity and higher sensitivity because of the improved Ni I/Ni II ratio.

Only slightly better results are obtained with a high intensity tube (Figure 10) which has an improvement in

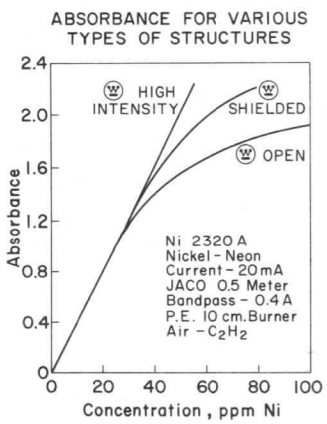

FIGURE 5

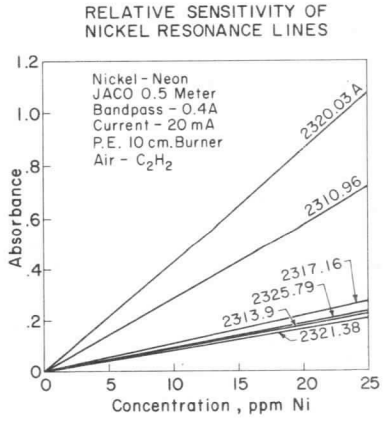

FIGURE 6

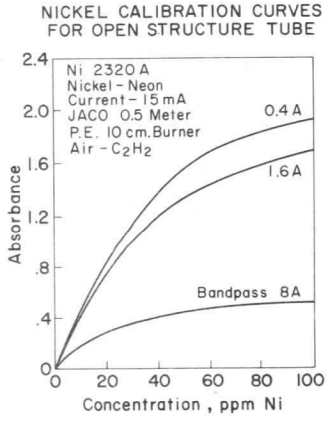

FIGURE 7

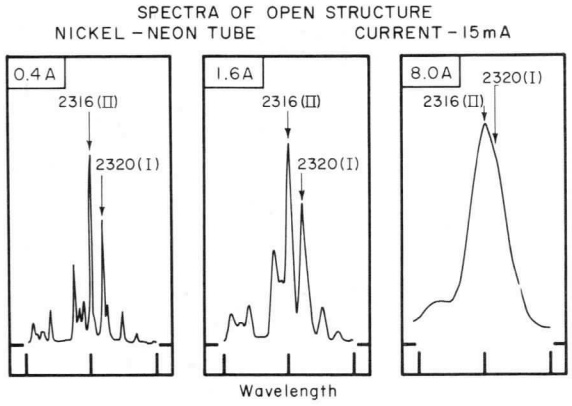

FIGURE 8

Ni I/Ni II ratio of about 4:1 over the shielded design. The detailed spectra of a Westinghouse high intensity tube for 0.4, 1.6, and 8A bandpasses are shown in Figure 11. The trace of the Westinghouse shielded design is similar to the spectra shown in this slide, especially for the wider bandpasses.

The lack of a major improvement in sensitivity is caused by the non-selective nature of the high brightness auxiliary discharge. All the ground state lines are intensified irrespective of individual line absorption sensitivities. For this reason, it is important to realize that high intensity tubes offer a real gain only if the original interfering lines are ion lines and/or if the

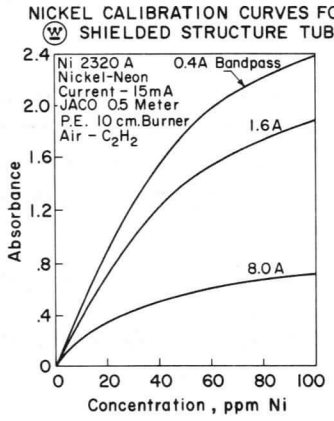

FIGURE 9

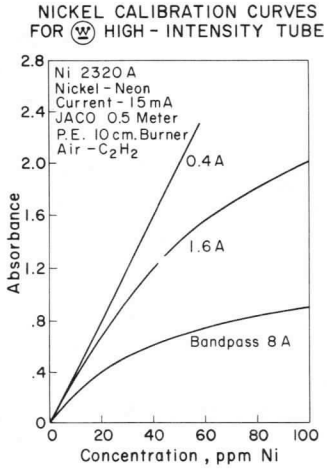

FIGURE 10

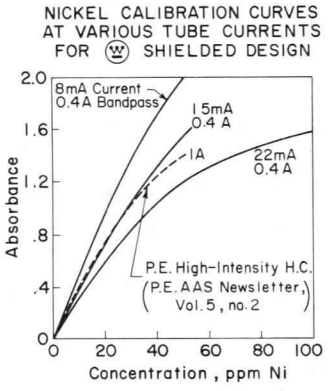

FIGURE 12

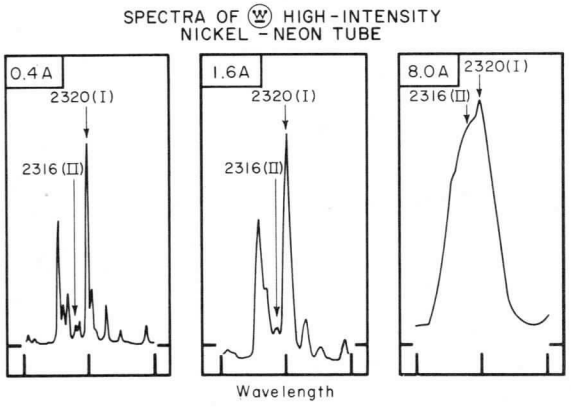

FIGURE 11

higher output is needed to overcome a poor signal-to-system noise problem.

ABSORBANCE AS A FUNCTION OF CURRENT

The absorbance was further examined as a function of current for two bandpass values of interest. Figure 12 shows the data for a narrow (0.4A) bandpass which could be used with high efficiency instrumentation where satisfactory signal-to-system noise ratios are available. Extremely high sensitivity and linearity of the working curves are obtained at low currents, and good values are obtained at normal operating currents. Further current increases result in lower sensitivity due to self-absorption in the discharge, but the linearity is still quite good.

When we look at the same data for a wider slit of 1.6A (Figure 13), it is immediately evident that we have a decreased sensitivity. Remembering our previous data, increasing the bandpass will permit adjacent lines to enter the instrument and thus reduce sensitivity.

NICKEL CALIBRATION CURVES AT VARIOUS TUBE CURRENTS FOR (W) SHIELDED DESIGN

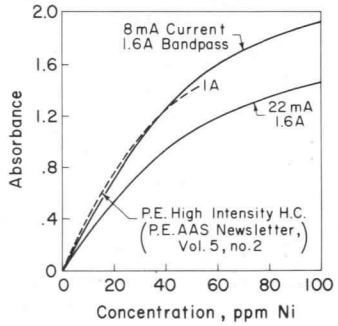

FIGURE 13

RELATIVE SENSITIVITY

We would like to say a few words about the data which has been presented on absorbance as a function of concentration. As has been noted on the figures, the data were obtained using a Jarrell-Ash, 0.5 meter monochromator and a Perkin-Elmer 10 cm. burner. The burner was modified to provide independent flow control of the air supply to the aspirator which could then be adjusted to use more or less sample, as desired. We have not attempted to optimize flow rates to give maximum sensitivity, but where data are compared with others, we have made an attempt to adjust the flow rate to achieve agreement, under normal operating current and bandpass, with the available data.

One additional point should be made. We are in general agreement with Perkin-Elmer on the curvature of the working data obtained with high intensity tubes and are concerned that some early claims made in the literature may be misleading. We hope the data presented will help to further clarify the situation.

CONCLUSIONS

In conclusion, it appears that high brightness tubes may be advantageous in special situations where insufficient resolution of an instrument may require an intensity reduction of undesirable neighboring ion lines, and in cases where the additional line intensity of absorbing lines is needed to improve the signal-to-system noise ratio. However, for the majority of the elements where tubes of sufficient intensity are available, and provided the instrument is of fair resolution and amplification we find it difficult to justify the increased cost of the more complicated tube and its accompanying, extra power supply.

Also, as mentioned earlier, we see no reason why similar gains achieved by the high intensity tubes, cannot be duplicated by a tube of a simplier design, employing the power supplies incorporated in most present instrumentation.

[1]Patent pending

[2]Sullivan, J. V. and Walsh, A. Spectrochimica Acta, 21 pp. 721-726 (1965).

[3]Perkin-Elmer A.A.S. Newsletter, Cartwright, et al., Vol. 5 No. 2 (1966)

[4]Since the original preparation of this paper, lifetimes shorter than those experienced with Westinghouse shielded structures have been reported.

Westinghouse

MULTI-ELEMENT HCDD

February 15, 1966

MULTI-ELEMENT HOLLOW CATHODE TUBES

The elements combined in a multi-element hollow cathode are carefully selected to ensure sufficient freedom of the major absorption lines from any inter-elemental line interferences. A minimum separation of 2 angstroms is kept between absorbing and interfering lines. However, in many cases, an absorbing line may be virtually free for more than ± 100 angstroms. Some hollow cathode tube users have requested and purchased special combinations in which serious interferences do occur for certain lines, but this fact is always brought to the user's attention before fabrication.

The individual line intensities of an element in a multi-element hollow cathode tube will usually be less than that of a tube containing a pure cathode of the same element. This is because each element must now share the discharge energy with all the other elements present. However, this reduction should not affect the output by a factor of more than 1/2 to 1/6 depending on the combination and number of elements combined. The output can be even greater in some multi-element tubes because alloying may permit a higher operating current than the pure cathode itself.

WINDOW: P - Pyrex, Q - Quartz

GAS FILL: A - Argon, N - Neon

SIZE: A - 1.5" Dia., B - 1" Dia.

CATHODE ELEMENT & TYPES	WINDOW GAS FILL & SIZE	MAX mA
Ca - Mg - AL		
WL-22604	Q - A - B	20
WL-22871	Q - A - A	20
WL-22930	Q - N - B	20
WL-22955	Q - N - A	20
Ba - Ca - Sr		
WL-23034	P - N - A	25
Ca - Mg - Al - Li		
WL-23035	Q - N - B	18
WL-23036	Q - A - A	18
Fe - Cu - Mn		
WL-23106	Q - N - B	35
Cr - Fe - Mn - Ni		
WL-23108	Q - N - B	30
Cu - Zn - Pb - Sn		
WL-23109	Q - N - B	12
As - Ni		
WL-23116	Q - N - B	20
Au - Ni		
WL-23117	Q - N - B	15
In - P		
WL-23118	Q - N - B	20
Cu - Ga		
WL-23119	Q - N - B	20
Se - Ni		
WL-23130	Q - N - B	15
Cu - Mn		
WL-23131	Q - N - B	35
Cu - Pb - Zn - Ag		
WL-23132	Q - N - B	15
Ba - Ca - Sr - Mg		
WL-23133	Q - N - B	25
Cu - Zn - Fe - Mn		
WL-23134	Q - N - B	15
Cu - Zn - Mo		
WL-23135	Q - N - B	15
Cu - Zn - Mo - Co		
WL-23141	Q - N - B	15
Cu - Zn - Pb - Cd		
WL-23146	Q - N - B	12
As - Sb - Bi		
WL-23147	Q - N - B	15
As - Se - Te		
WL-23148	Q - N - B	15
Ca - Mg - Al - Li		
WL-23158	Q - A - B	18
Pb - Zn - Ag		
WL-23171	Q - N - B	12
Na - K		
WL-23173	P - N - A	25
Cr - Co - Ni		
WL-23174	Q - N - B	25
Cr - Co - Cu - Fe - Mn - Ni		
WL-23176	Q - N - B	30
Mo - Cu - Fe		
WL-23177	Q - N - B	30
Fe - Cu - Ni - Pb - Zn		
WL-23179	Q - N - B	15

ET-1553

The information contained herein is supplied without assuming responsibility for infringement of patents or other rights of third parties which may result from its use. No license is granted by implication or otherwise under any patent or patent rights of Westinghouse Electric Corporation.

STATE OF THE ART REPORT ON WESTINGHOUSE HOLLOW CATHODE DISCHARGE DEVICES

INTRODUCTION

Since 1963, the Westinghouse Electronic Tube Division has been building tubes using a structure with improved efficiency and increased stabilization in the discharge. This general design, on which a patent has recently been issued, has provided the user with from 5 to 20 times the spectral output associated with the original "open structure" discovered by Paschen in 1916 (See Figure 1). The Westinghouse design, combined with careful processing and high temperature seals, has led to greater life by factors of 3 to 15 based on ampere-hours of operation.

COMPARISON OF HOLLOW CATHODE DEVICE STRUCTURES

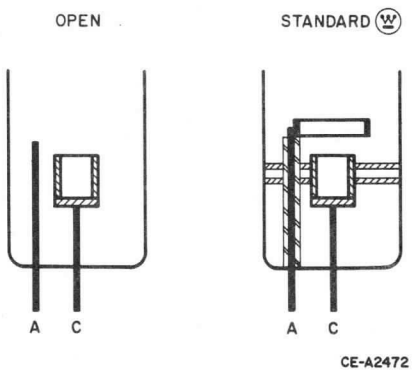

FIGURE 1

Westinghouse has also concentrated considerable effort on the development of cathode materials and fabrication techniques to provide even greater output and stability and freedom from interference. These innovations have been applied to manufactured product as a matter of course and without a great deal of publicity. As a result the Westinghouse line of tubes is the most complete in the industry, including 70 single elements and 34 multi-element types with the output and stability of the tubes generally recognized as the best in the industry.

HIGH SPECTRAL OUTPUT

In 1964, many claims were made about "high intensity" tubes, giving intensity increases of factors of 100 over "open" structures.[1] No information was made available, at that time, compare them with the improvements which had already been incorporated in the standard Westinghouse product. Early in 1966, a detailed analysis of a nickel "high brightness" tube was made. The results showed that the intensity gain of a factor of 8 over an "open" structure. This was achieved with approximately 300 milliamperes of auxiliary current in addition to the discharge current of 20 milliamperes used in both tubes to compare them.[2] In June 1966, Westinghouse presented data comparing the "open", "high intensity", and the standard Westinghouse structures.[3] In that paper the standard Westinghouse structure showed a factor of 7.5 better than the "open" design with no auxiliary current required. Another factor mentioned is that the high auxiliary currents would tend to reduce life expectancy.

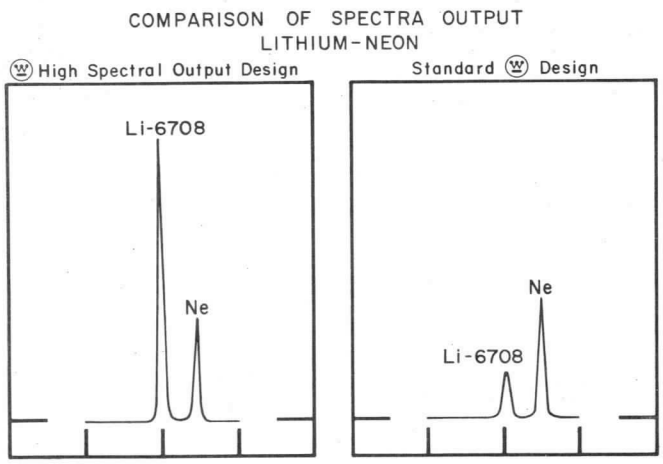

FIGURE 2

Further development efforts, centered about the Westinghouse design, resulted in a nickel tube which compared favorably with the "high intensity" equivalent without need for auxiliary power supplies or high auxiliary currents. Comparative data for this, the first in a series of "High Spectral Output" designs, are shown in Table I.

COMPARISON OF VARIOUS TYPES OF NICKEL HOLLOW CATHODE STRUCTURES

Equipment – ½ meter Ebert monochromator
16 A/mm linear reciprocal dispersion
grating blazed at 3000 A
100 micron slits
R106 photomultiplier
Suprasil-grade quartz optics

STRUCTURE	RELATIVE SPECTRAL OUTPUT, NI-2320A	INTENSITY RATIO 2320 I/2316 II
Open	2000 (Note a)	0.8
Standard Ⓦ	15000 (Note a)	2.0
High Brightness (P.E.)	16000 (Note b)	9.3
Ⓦ High Spectral Output	22000 (Note a)	6.0

(a) Cathode current = 20 milliamperes
(b) Auxiliary current = 320 milliamperes, cathode current = 20 milliamperes

TABLE 1

The output of the Westinghouse High Spectral Output structure is greater than the "high brightness" design and the resonance line-to-ion line ratio is somewhat less. The Westinghouse High Spectral Output types will operate from standard hollow cathode power supplies.

Since the development of the first tube, efforts have been exerted to generate High Spectral Output types for other elements. To date, the information shown in Table II is available.

Some elements show no gain at the present time. In cases where the intensity was already high, small gains were traded-off for increased life by limiting the maximum current to some lower value.

No multi-element tubes are listed as the gains have not been significant; for these types, other basic approaches will probably be necessary.

The success achieved with lithium (See Table II and Figure 2) has made us optimistic on gaining higher output for two elements of major importance, sodium and potassium. Very recently the data of Figure 3 were obtained which show a gain for potassium of about 7 for the 7665A line and 19 for the 4044A line. Similar devices are undergoing life tests. We expect that further information should be available in the near future.

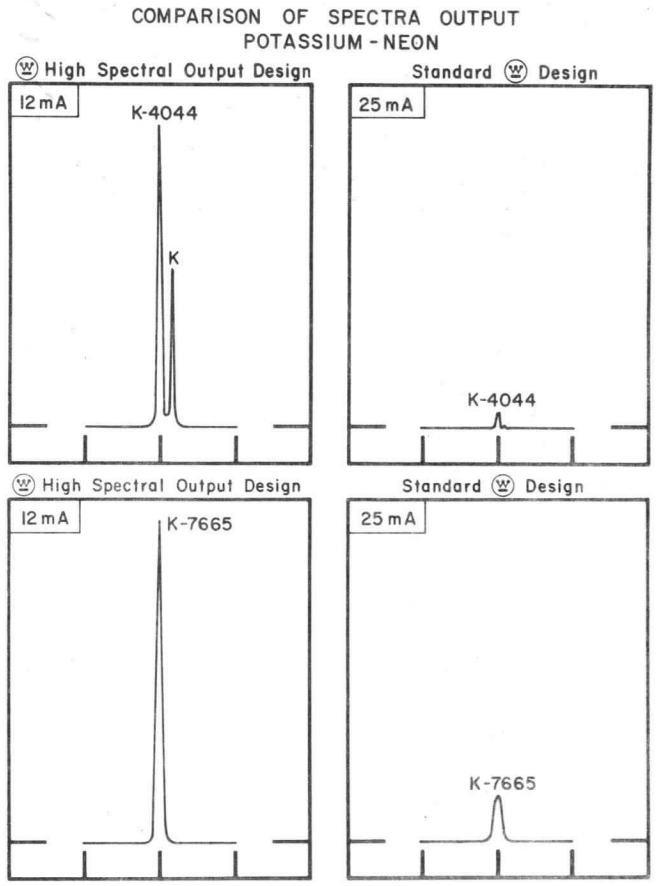

FIGURE 3

REFERENCES

[1]Sullivan, J.V. and Walsh, A., Spectrochimica Acta 21, pp 721-726 (1965).

[2]Perkin-Elmer A.A.S. Newsletter, Cartwright, et. al., Vol. 5, No. 2 (1966).

[3]"Recent Developments in Hollow Cathode Tubes", W. Gillies, G. Yamasaki, J.C. Burger, Society for Applied Spectroscopy, Fifth National Meeting, Chicago, Illinois ETD-6604.

RELATIVE OUTPUT OF STANDARD AND HIGH SPECTRAL OUTPUT (W) HOLLOW CATHODE TUBES

Equipment – ½ meter Ebert monochromator
16 A/mm linear reciprocal dispersion
grating blazed at 3000 A
25 micron slits
R106 photomultiplier
Suprasil-grade quartz optics

ELEMENT	WAVELENGTH	RELATIVE OUTPUT (NOTE A)	
		STANDARD	HIGH SPECTRAL OUTPUT
Al	3092	5000 (20)	No gain
B	2497	200 (25)	500 (20)
Cd	2288	150 (12)	1000 (12)
Ca	4227	1400 (20)	No gain
Cr	3579	7800 (25)	12000 (20)
	4254	7200 (25)	7200 (20)
Co	2407	2000 (25)	6400 (20)
Mo	3133	4000 (30)	5500 (30)
	3170	2000 (30)	3000 (30)
Ni	2320	600 (20)	2200 (20)
	3415	3300 (20)	7000 (20)
Nb	4059	400 (25)	730 (25)
	4080	500 (30)	520 (25)
Pt	2659	550 (30)	830 (25)
Fe	2483	1200 (20)	1300 (20)
Pb	2170	80 (15)	200 (15)
	2833	400 (15)	440 (15)
Li	6708	4 (30)	15 (20)
Re	3460	2000 (20)	2400 (20)
	3465	1400 (20)	1600 (20)
Rh	3435	4400 (20)	9500 (20)
	3692	3600 (20)	6400 (20)
Si	2516	100 (20)	700 (20)
Sr	4607	600 (25)	900 (20)
Ta Note b	3311	400 (30) Ne	600 (25) A
Sn	2863	60 (15)	140 (15)
Ti	3643	1000 (25)	No gain
Zn	2139	1800 (18)	3400 (15)
	3076	1600 (18)	6000 (15)

(a) At current indicated ( ) in milliamperes. Relative tube intensity in 10^{-9} Amperes.

(b) Gas fill changed due to interference of neon line.

TABLE 2

ETD-6108
April, 1966

POWER SUPPLIES FOR HOLLOW CATHODE DISCHARGE DEVICES

Summary

Hollow cathode tubes are now available from Westinghouse Electronic Tube Division, Elmira, New York. Power supply requirements for these devices are quite specialized. This memo provides design data to those who are relatively unfamiliar with the characteristics of such devices.

GENERAL

The choice of a power supply will depend to a great extent on the limit and accuracy of the desired detectability. It will also be dependent on the type of detection instrumentation if the tube is used with atomic absorption spectroscopy equipment. In general, a regulated voltage output is to be desired. For most general investigations with single-beam instrumentation the regulation should be of the order of 1%. For precise or low level, single-beam measurements, a well-regulated constant current supply providing 0.1% (or better) current regulation would be desirable.

When double-beam instrumentation is available, the requirements placed on the supply are less stringent and a regulated 1% supply should be adequate for most purposes. The reason is that the effects of variations in hollow cathode current or voltage are considerably reduced when the ratio of the radiation through the flame to the reference beam can be concurrently measured.

VOLTAGE REQUIREMENTS

All Westinghouse hollow cathode tubes have starting voltages which are quite low and are comparable to the maintaining voltage. This means that the power supply voltage requirements are reduced and high surge currents at starting are minimized. In general, a 500 volt supply will be adequate for most applications. It should be pointed out that a supply with higher output voltage does offer definite advantages. With reference to Figure 1, it can be seen that the use of a supply of voltage V_1 to attain an operating point V_O, I_O would require a value of resistance of $\frac{V_1}{I_1}$ which would be considerably higher than the resistance required if a supply of voltage V_2 were used ($R = \frac{V_2}{I_2}$). The effect of the increased voltage and resistance is to minimize the effect of variations in the voltage-current characteristic of the hollow cathode tube. This may be seen in the detailed inset of Figure 1 which illustrates the effect of variations in the tube sustaining voltage which is the characteristic most likely to change. The higher supply voltage (and thus higher resistance) will restrict variations in output current to a much lower value for equal variations in the characteristic of the tube. The illustration is highly exaggerated as the tubes will remain relatively stable over long periods. With a 400 to 700 volt d-c power supply, the series resistance should be between 2000 and 50000 ohms depending on the desired operating current.

EFFECT OF DIFFERENT SUPPLY VOLTAGES

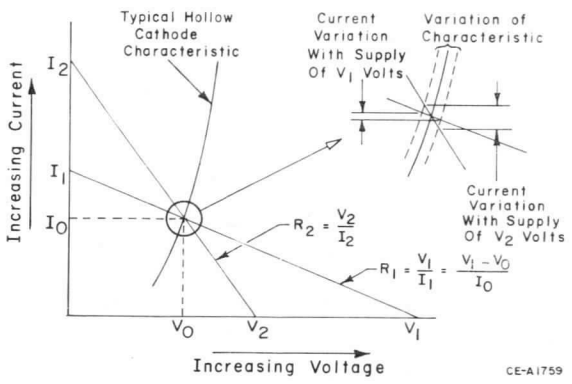

FIGURE 1

CURRENT REQUIREMENTS

The maximum current rating of present hollow cathode tubes is about 40 milliamperes and it is doubtful that values in excess of this will be required in the near future except for specialized experiments.

Each data sheet designates the maximum current to be used for a particular cathode material and this value must not be exceeded under any circumstance. The user should insure that sufficient series resistance is present to limit the current to this value or lower at all times. Operation at excessive current may cause an acceleration in "clean-up" of the gas (reduction in pressure) with subsequent unstable operation, or in severe situations it may result in melting of the cathode.

The user may readily calculate the minimum value of series resistance which should be used once the supply voltage and the electrical characteristics of the devices to be used are known. It is suggested that the series resistance consist of a fixed resistor plus a continuously variable resistance. The former should be sufficient to limit the current to a safe value for the power supply; the latter may serve to set the current to the precise, required value.

Maximum tube life will be achieved when the operating current is the lowest value which will give a satisfactory signal-to-background ratio.

A-C AND PULSE OPERATION

Operation of hollow cathodes from a-c or pulsed supplies offers obvious advantages in elimination of mechanical choppers while providing modulation of the light source and reduction of noise due to the flame. For applications using rectified 60 hertz a-c, the peak current as measured on an oscilloscope should be limited to 4 times the maximum d-c rating.

Using tubes with relatively high output, at high peak currents, may cause photomultiplier saturation, a reduction in absorption with an increase in current.

The user is cautioned that pulsed operation should be carefully analyzed by experts in the field to insure that the proper circuit conditions are present. This type of operation can lead to exceptionally short life if extreme caution is not taken.

Westinghouse

HOLLOW CATHODE DISCHARGE DEVICES FOR ATOMIC ABSORPTION SPECTROSCOPY

High Spectral Output Types
The type numbers with an "A" suffix are High Spectral Output Types.

Preferred Types
The type numbers preceded by a (★) are those which give best results in most applications. For each element, there is a combination of window and gas fill which yields maximum spectral output & sensitivity and minimum noise & interference. These preferred types are normally available for immediate shipment. The balance of the listed types will usually be available in 4 to 6 weeks. On pages 3 & 4 is an alphabetical list, by element, of the preferred types to facilitate use of this Price List.

Single-Element Devices

Type	Cathode Element	Price	Type	Cathode Element	Price	Type	Cathode Element	Price
WL-22602	Iron	$ 95.00	WL-22841	Bismuth	$130.00	WL-22897	Rhodium	$205.00
★WL-22603	Copper	90.00	WL-22842	Tellurium	140.00	WL-22898	Selenium	165.00
WL-22605	Nickel	95.00	WL-22843	Selenium	145.00	WL-22899	Samarium	175.00
WL-22606	Copper	100.00	★WL-22844	Tungsten	100.00	WL-22900	Silicon	140.00
WL-22607	Zinc	100.00	★WL-22845A	Europium	200.00	WL-22901	Silver	120.00
WL-22608	Manganese	105.00	WL-22846	Lanthanum	155.00	WL-22902	Tellurium	175.00
WL-22609	Magnesium	100.00	★WL-22847	Mercury	110.00	WL-22903	Terbium	165.00
★WL-22610	Calcium	90.00	★WL-22848	Terbium	140.00	WL-22904	Tin	145.00
WL-22611	Iron	95.00	WL-22849	Tungsten	110.00	WL-22905	Tungsten	125.00
WL-22663	Nickel	100.00	WL-22850	Rhodium	190.00	WL-22906	Tungsten	125.00
WL-22804	Aluminum	100.00	★WL-22851A	Platinum	150.00	WL-22907	Uranium	220.00
WL-22805	Molybdenum	100.00	WL-22856	Vanadium	160.00	WL-22908	Zinc	115.00
★WL-22806	Silver	95.00	WL-22857	Palladium	140.00	WL-22909	Zinc	115.00
★WL-22809	Aluminum	85.00	★WL-22858A	Niobium	125.00	WL-22910	Vanadium	175.00
★WL-22810A	Iron	90.00	★WL-22859A	Tantalum	120.00	WL-22911	Palladium	165.00
★WL-22811A	Zinc	95.00	★WL-22860	Zirconium	120.00	WL-22912	Niobium	155.00
WL-22812	Chromium	95.00	★WL-22863A	Potassium	130.00	WL-22913	Tantalum	145.00
WL-22813	Cobalt	95.00	WL-22864	Sodium	140.00	WL-22914	Zirconium	145.00
WL-22814	Cobalt	100.00	WL-22867	Indium	145.00	WL-22915	Indium	165.00
WL-22815	Manganese	100.00	WL-22870	Aluminum	115.00	★WL-22916A	Boron	115.00
WL-22816	Cadmium	125.00	WL-22872	Antimony	155.00	WL-22917	Boron	140.00
WL-22817	Cesium	135.00	WL-22873	Arsenic	165.00	WL-22925	Lithium-6	150.00
★WL-22818	Samarium	150.00	WL-22874	Bismuth	150.00	WL-22926	Lithium-7	135.00
★WL-22819A	Nickel	90.00	WL-22875	Cadmium	145.00	★WL-22927A	Lead	110.00
WL-22820	Iron	95.00	WL-22876	Manganese	125.00	★WL-22928A	Cobalt	90.00
WL-22821	Chromium	100.00	WL-22877	Chromium	120.00	WL-22929	Aluminum	100.00
WL-22822	Tin	130.00	WL-22878	Cobalt	115.00	★WL-22931A	Antimony	110.00
★WL-22823	Cesium	125.00	WL-22879	Copper	120.00	★WL-22932	Bismuth	120.00
★WL-22824	Rubidium	130.00	WL-22880	Dysprosium	170.00	★WL-22933A	Cadmium	115.00
WL-22825	Lithium-Natural	125.00	WL-22881	Erbium	170.00	★WL-22934A	Chromium	90.00
★WL-22826	Uranium	185.00	WL-22882	Europium	220.00	★WL-22935	Gold	140.00
★WL-22827	Dysprosium	150.00	WL-22883	Gold	170.00	★WL-22936	Manganese	95.00
★WL-22828	Erbium	150.00	WL-22884	Gallium	160.00	★WL-22937A	Molybdenum	90.00
★WL-22829	Holmium	150.00	WL-22885	Holmium	170.00	★WL-22938	Selenium	130.00
★WL-22830	Lithium-6	140.00	WL-22886	Iron	120.00	★WL-22939A	Silicon	115.00
★WL-22831	Lithium-7	125.00	WL-22887	Iron	120.00	★WL-22940	Tellurium	130.00
WL-22832	Silicon	125.00	WL-22888	High Purity Iron	160.00	★WL-22941A	Tin	120.00
★WL-22833	Gallium	135.00	WL-22889	Lanthanum	170.00	★WL-22942A	Rhenium	150.00
★WL-22834	Barium	115.00	WL-22890	Lead	140.00	WL-22951	Magnesium	120.00
★WL-22835A	Strontium	130.00	WL-22891	Magnesium	120.00	WL-22952	Lead	145.00
★WL-22836	Arsenic	140.00	WL-22892	Mercury	135.00	WL-22953	Cobalt	115.00
★WL-22837	High Purity Iron	135.00	WL-22893	Molybdenum	120.00	WL-22954	Aluminum	115.00
WL-22838	Lead	120.00	WL-22894	Nickel	120.00	WL-22956	Antimony	150.00
WL-22839	Gold	150.00	WL-22895	Nickel	120.00	WL-22957	Bismuth	145.00
WL-22840	Antimony	135.00	WL-22896	Platinum	175.00	WL-22958	Cadmium	145.00

February 23, 1968
New Information Supersedes ET-1513 INT dated July 15, 1967

Westinghouse

Type	Cathode Element	Price
WL-22959	Chromium	$115.00
WL-22960	Gold	170.00
WL-22961	Manganese	125.00
WL-22962	Molybdenum	120.00
WL-22963	Selenium	165.00
WL-22964	Silicon	140.00
WL-22965	Tellurium	175.00
WL-22966	Tin	145.00
WL-22967	Rhenium	175.00
★WL-22968	Magnesium	90.00
★WL-22969	Palladium	130.00
WL-22970	Palladium	165.00
WL-22971	Tantalum	130.00
WL-22972	Tantalum	145.00
★WL-22973	Vanadium	150.00
WL-22974	Vanadium	175.00
WL-22975	Gadolinium	155.00
WL-22976	Yttrium	160.00
★WL-22977	Cerium	145.00
WL-22978	Cerium	160.00
★WL-22979	Neodymium	150.00
WL-22980	Neodymium	170.00
★WL-22981	Praseodymium	150.00
WL-22982	Praseodymium	170.00
★WL-22983	Ytterbium	160.00
WL-22984	Ytterbium	185.00
★WL-22985	Gadolinium	150.00
WL-22986	Gadolinium	170.00
★WL-22987	Yttrium	145.00
WL-22988	Yttrium	170 00
★WL-22989	Phosphorus	190.00
WL-22990	Phosphorus	215.00
★WL-22991	Titanium	100.00
WL-22992	Titanium	125.00
★WL-22996	Indium	125.00
★WL-22997A	Rhodium	180.00
WL-22998	Zirconium	130.00
★WL-23007	Thulium	180.00
WL-23008	Thulium	205.00
★WL-23009	Lutetium	180.00
WL-23010	Lutetium	205.00
★WL-23027	Thorium	145.00
WL-23028	Thorium	170.00
WL-23041	Copper	95.00
WL-23042	Copper	120.00
WL-23046	Rubidium	150.00
★WL-23049	Lanthanum	150.00
★WL-23059A	Sodium	130.00
★WL-23060A	Lithium-Natural	115.00
WL-23115	Lithium-Natural	140.00
★WL-23138	Ruthenium	155.00
★WL-23143	Sulphur	150.00
★WL-23144	Osmium	225.00
★WL-23145	Iridium	160.00
★WL-23160	Germanium	140.00
★WL-23180	Hafnium	155.00
★WL-23181	Scandium	200.00

Multi-Element Devices

Type	Cathode Elements	Price
WL-22604	Calcium, Magnesium, Aluminum	$130.00
WL-22871	Calcium, Magnesium, Aluminum	150.00
★WL-22930	Calcium, Magnesium, Aluminum	140.00
WL-22955	Calcium, Magnesium, Aluminum	150.00
★WL-23034	Barium, Calcium, Strontium	160.00
★WL-23035	Calcium, Magnesium, Aluminum, Lithium	160.00
WL-23036	Calcium, Magnesium, Aluminum, Lithium	185.00
★WL-23106	Iron, Copper, Manganese	160.00
★WL-23108	Chromium, Iron, Manganese, Nickel	190.00
★WL-23109	Copper, Zinc, Lead, Tin	190.00
★WL-23116	Arsenic, Nickel	160.00
★WL-23117	Gold, Nickel	160.00
★WL-23118	Indium, Phosphorus	170.00
★WL-23119	Copper, Gallium	170.00
★WL-23130	Selenium, Nickel	160.00
★WL-23131	Copper, Manganese	105.00
★WL-23132	Copper, Lead, Zinc, Silver	190.00
★WL-23133	Barium, Calcium, Strontium, Magnesium	190.00
★WL-23134A	Copper, Zinc, Iron, Manganese	190.00
★WL-23135	Copper, Zinc, Molybdenum	160.00
★WL-23141	Copper, Zinc, Molybdenum, Cobalt	190.00
★WL-23146	Copper, Zinc, Lead, Cadmium	190.00
★WL-23147	Arsenic, Antimony, Bismuth	200.00
★WL-23148	Arsenic, Selenium, Tellurium	200.00
WL-23158	Calcium, Magnesium, Aluminum, Lithium	170.00
★WL-23171	Lead, Zinc, Silver	200.00
★WL-23173	Sodium, Pottasium	145.00
★WL-23174	Chromium, Cobalt, Nickel	170.00
★WL-23176	Chromium, Cobalt, Copper, Iron, Manganese, Nickel	225.00
★WL-23177	Molybdenum, Copper, Iron	170.00
★WL-23179	Iron, Copper, Nickel, Lead, Zinc	220.00
★WL-23190	Copper, Cobalt	150.00
★WL-23207	Calcium, Zinc	120.00
★WL-23208	Chromium, Copper	140.00
★WL-23211	Gold, Copper, Iron, Nickel	200.00
★WL-23216	Silver, Zinc, Lead, Cadmium	190.00
WL-23230	Sodium, Potassium	155.00
★WL-23269	Gold, Silver	155.00
★WL-23291	Cobalt, Iron	150.00
★WL-23294	Indium, Silver	160.00
★WL-23295	Cobalt, Copper, Gold, Nickel	200.00
★WL-23426	Cobalt, Nickel	150.00
★WL-23441A	Copper, Nickel	150.00

Accessory

Type	Description	Price
WL-23113	WL-23040 Cable Kit & WL-23112 Adapter for Perkin-Elmer Models 214, 290, & 303	$ 38.00

Warranty:

Each Westinghouse Hollow Cathode Device is warranted to be free from electrical or mechanical defects due to workmanship and materials, and to provide satisfactory service under normal operating conditions, within our published ratings. If failure should occur prior to five ampere hours, full credit will be allowed. In no event shall the warranty extend beyond a 24 month period after initial shipment from the Westinghouse Electronic Tube factory. No other warranties or liabilities for consequential damage may be assumed or implied.

HOLLOW CATHODE DISCHARGE DEVICES FOR ATOMIC ABSORPTION SPECTROSCOPY

Preferred Types

Single-Element Devices

Cathode Element	Type	Price
Aluminum	WL-22809	$ 85.00
Antimony	WL-22931A	110.00
Arsenic	WL-22836	140.00
Barium	WL-22834	115.00
Bismuth	WL-22932	120.00
Boron	WL-22916A	115.00
Cadmium	WL-22933A	115.00
Calcium	WL-22610	90.00
Cerium	WL-22977	145.00
Cesium	WL-22823	125.00
Chromium	WL-22934A	90.00
Cobalt	WL-22928A	90.00
Copper	WL-22603	90.00
Dysprosium	WL-22827	150.00
Erbium	WL-22828	150.00
Europium	WL-22845A	200.00
Gadolinium	WL-22985	150.00
Gallium	WL-22833	135.00
Germanium	WL-23160	140.00
Gold	WL-22935	140.00
Hafnium	WL-23180	155.00
Holmium	WL-22829	150.00
Indium	WL-22996	125.00
Iridium	WL-23145	160.00
Iron	WL-22810A	90.00
High Purity Iron	WL-22837	$135.00
Lanthanum	WL-23049	150.00
Lead	WL-22927A	110.00
Lithium-Natural	WL-23060A	115.00
Lithium-6	WL-22830	140.00
Lithium-7	WL-22831	125.00
Lutetium	WL-23009	180.00
Magnesium	WL-22968	90.00
Manganese	WL-22936	95.00
Mercury	WL-22847	110.00
Molybdenum	WL-22937A	90.00
Neodymium	WL-22979	150.00
Nickel	WL-22819A	90.00
Niobium	WL-22858A	125.00
Osmium	WL-23144	225.00
Palladium	WL-22969	130.00
Phosphorus	WL-22989	190.00
Platinum	WL-22851A	150.00
Potassium	WL-22863A	130.00
Praseodymium	WL-22981	150.00
Rhenium	WL-22942A	150.00
Rhodium	WL-22997A	180.00
Rubidium	WL-22824	130.00
Ruthenium	WL-23138	155.00
Samarium	WL-22818	150.00
Scandium	WL-23181	$200.00
Selenium	WL-22938	130.00
Silicon	WL-22939A	115.00
Silver	WL-22806	95.00
Sodium	WL-23059A	130.00
Strontium	WL-22835A	130.00
Sulphur	WL-23143	150.00
Tantalum	WL-22859A	120.00
Tellurium	WL-22940	130.00
Terbium	WL-22848	140.00
Thorium	WL-23027	145.00
Thulium	WL-23007	180.00
Tin	WL-22941A	120.00
Titanium	WL-22991	100.00
Tungsten	WL-22844	100.00
Uranium	WL-22826	185.00
Vanadium	WL-22973	150.00
Ytterbium	WL-22983	160.00
Yttrium	WL-22987	150.00
Zinc	WL-22811A	95.00
Zirconium	WL-22860	120.00

Multi-Element Devices

Element	Alloyed With	Type	Price
Aluminum	Ca Mg	WL-22930	$140.00
	Ca Mg Li	WL-23035	160.00
Antimony	Bi As	WL-23147	200.00
Arsenic	Bi Sb	WL-23147	200.00
	Ni	WL-23116	160.00
	Se Te	WL-23148	200.00
Barium	Ca Sr	WL-23034	160.00
	Ca Sr Mg	WL-23133	190.00
Bismuth	As Sb	WL-23147	200.00
Cadmium	Cu Zn Pb	WL-23146	190.00
	Ag Zn Pb	WL-23216	190.00
Calcium	Mg Al	WL-22930	140.00
	Mg Al Li	WL-23055	160.00
	Zn	WL-23207	120.00
	Ba Sr	WL-23034	160.00
	Ba Sr Mg	WL-23133	190.00
Chromium	Fe Mn Ni	WL-23108	$190.00
	Cu	WL-23208	140.00
	Co Ni	WL-23174	170.00
	Co Cu Fe Mn Ni	WL-23176	225.00
Cobalt	Cu	WL-23190	150.00
	Fe	WL-23291	150.00
	Ni	WL-23426	150.00
	Cr Ni	WL-23174	170.00
	Cu Au Ni	WL-23295	200.00
	Cu Zn Mo	WL-23141	190.00
	Cr Cu Fe Mn Ni	WL-23176	225.00
Copper	Co	WL-23190	150.00
	Cr	WL-23208	140.00
	Ga	WL-23119	170.00
	Ni	WL-23441A	150.00
	Mn	WL-23131	105.00
	Fe Mn	WL-23106	160.00
	Fe Mo	WL-23177	170.00
	Zn Mo	WL-23135	160.00
	Zn Mo Co	WL-23141	190.00
	Zn Fe Mn	WL-23134A	190.00
	Zn Pb Cd	WL-23146	190.00

HOLLOW CATHODE DISCHARGE DEVICES FOR ATOMIC ABSORPTION SPECTROSCOPY

Element	Alloyed With	Type	Price
Copper (Cont.)	Zn Pb Ag	WL-23132	$190.00
	Zn Pb Sn	WL-23109	190.00
	Co Au Ni	WL-23295	200.00
	Fe Ni Au	WL-23211	200.00
	Fe Ni Pb Zn	WL-23179	220.00
	Fe Ni Cr Co Mn	WL-23176	225.00
Gallium	Cu	WL-23119	170.00
Gold	Ni	WL-23117	160.00
	Ag	WL-23269	155.00
	Ni Fe Cu	WL-23211	200.00
	Co Cu Ni	WL-23295	200.00
Indium	Ag	WL-23294	160.00
	P	WL-23118	170.00
	Co	WL-23291	150.00
Iron	Cu Mn	WL-23106	160.00
	Cu Mo	WL-23177	170.00
	Cu Ni Au	WL-23211	200.00
	Mn Cr Ni	WL-23108	190.00
	Mn Cu Zn	WL-23134A	190.00
	Cu Ni Pb Zn	WL-23179	220.00
	Cu Ni Mn Cr Co	WL-23176	225.00
Lead	Zn Ag	WL-23171	200.00
	Zn Ag Cd	WL-23216	190.00
	Zn Ag Cu	WL-23132	190.00
	Zn Cd Cu	WL-23146	190.00
	Zn Cu Sn	WL-23109	190.00
	Zn Cu Fe Ni	WL-23179	220.00
Lithium	Ca Mg Al	WL-23035	160.00
Magnesium	Ca Al	WL-22930	140.00
	Ca Al Li	WL-23035	160.00
	Ca Ba Sr	WL-23133	190.00
Manganese	Cu	WL-23131	105.00
	Cu Fe	WL-23106	160.00
	Fe Cu Zn	WL-23134A	190.00
	Fe Cr Ni	WL-23108	190.00
	Fe Cu Co Cr Ni	WL-23176	225.00
Molybdenum	Cu Fe	WL-23177	170.00
	Cu Zn	WL-23135	160.00
	Cu Zn Co	WL-23141	190.00

Element	Alloyed With	Type	Price
Nickel	As	WL-23116	$160.00
	Au	WL-23117	160.00
	Cu	WL-23441A	150.00
	Co	WL-23426	150.00
	Se	WL-23130	160.00
	Cr Co	WL-23174	170.00
	Cr Fe Mn	WL-23108	190.00
	Fe Cu Au	WL-23211	200.00
	Co Cu Au	WL-23295	200.00
	Fe Cu Pb Zn	WL-23179	220.00
	Fe Cu Co Cr Mn	WL-23176	225.00
Phosphorus	In	WL-23118	170.00
Potassium	Na	WL-23173	145.00
Selenium	Ni	WL-23130	160.00
	As Te	WL-23148	200.00
Silver	Au	WL-23269	155.00
	In	WL-23294	160.00
	Pb Zn	WL-23171	200.00
	Pb Zn Cd	WL-23216	190.00
	Pb Zn Cu	WL-23132	190.00
Sodium	K	WL-23173	145.00
Strontium	Ba Ca	WL-23034	160.00
	Ba Ca Mg	WL-23133	190.00
Tellurium	As-Se	WL-23148	200.00
Tin	Cu Pb Zn	WL-23109	190.00
Zinc	Ca	WL-23207	120.00
	Cu Mo	WL-23135	160.00
	Pb Ag	WL-23171	200.00
	Cu Mo Co	WL-23141	190.00
	Cu Fe Mn	WL-23134A	190.00
	Pb Cu Cd	WL-23146	190.00
	Pb Cu Ag	WL-23132	190.00
	Pb Cu Sn	WL-23109	190.00
	Pb Cd Ag	WL-23216	190.00
	Pb Cu Fe Ni	WL-23179	220.00

For Data see: ET-1532
ET-1553

WESTINGHOUSE ELECTRIC INTERNATIONAL COMPANY
200 PARK AVENUE, NEW YORK 10017, U.S.A.
Printed in U.S.A.

PROTECTOR TUBE TYPE KX642

The KX642 protector tube is a three-electrode tube designed to protect attendants, control systems, and other circuits from excessive voltage overloads. When the tube is connected across the line to be protected and to ground, as shown in schematic diagram CE-A1159, an overload-voltage surge will be carried to ground through the tube, provided the potential of the surge is not greater than the rated capacity of the tube. The KX642 is designed to allow a maximum potential of 230 volts ac rms to pass to the protected line, and its breakdown voltage is 300 to 500 volts ac rms.

GENERAL DATA

Electrical

Voltage		
Breakdown, ac rms sine wave	300-500	volts
Maximum for Protected Line	230	volts
Typical for Protected Line	115	volts

Mechanical

Mounting Position	Vertical, base down	
Type of Cooling	Air, unrestricted convection	
Overall Length, maximum	4-3/16	in.
Overall Diameter, maximum	2-3/16	in.
Bulb	A-17	
Base	JETEC A4-70	
Basing, see diagram CE-A1158		
Net Weight, approximate	2	oz
Shipping Weight, approximate	8	oz

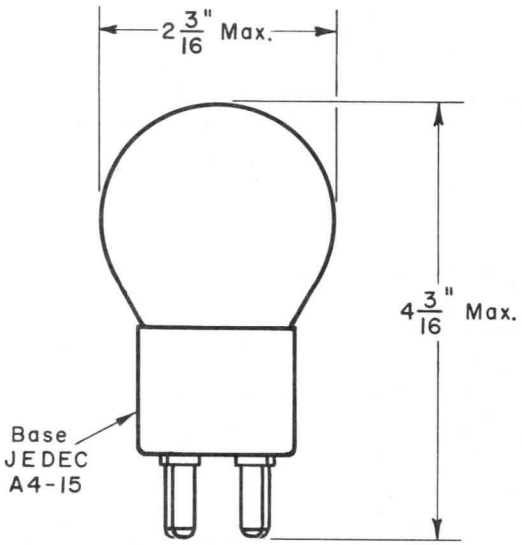

MAXIMUM RATINGS
Absolute Values

Current, maximum		
Discharge for 2 Seconds	50	amp
Discharge for 10 Minutes	7	amp
Short Circuit To Clear At:		
First Zero in 115-Volt-Line Cycle	15	amp
First Zero in 230-Volt-Line Cycle	10	amp

BASING DIAGRAM

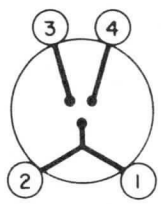

BASE CONNECTIONS

3&4 To Supply Line
1 or 2 To Ground Through
60 - Ohm Resistor

CE-A1158

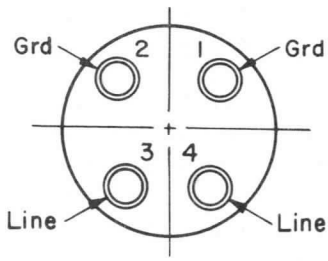

Pins 1&2 are common to one electrode; either may be used.

CE-A1157

INSTALLATION AND OPERATION

INSTALLATION

The KX642 is preferably installed in a vertical position with base down and connected across the secondary of the power voltage step-down transformer, as shown in the wiring schmatic CE-A1159. Pins 1 and 2 are common and either may be connected to ground. Connect pins 3 and 4 to the line to be protected.

A 60-ohm resistor should be connected in series with the tube to prevent a possible short circuit of the supply power source through the tube when discharging a surge voltage.

Fuses should be provided in the high-tension power supply lines, and if the stepped-up secondary current of the step-down voltage transformer is excessive for the rating of the KX642 tube, two or more of the tubes should be connected in parallel. Ten-ampere fuses should be connected in each control circuit.

OPERATION

With the KX642 protector tube or tubes connected across the secondary of the power transformer, if an open or short-circuit should occur the resultant voltage surge would find a relatively low pressure discharge path to ground through the protector tube or tubes.

The capacity of this protector, as determined by laboratory tests, is 50 amperes for 2 seconds duration. Under these conditions the tube has a life of many severe discharge cycles without change in its characteristics. Heavier discharge currents will reduce the useful life term of the tube.

Tubes in service should be inspected periodically, especially when they have been subjected to several discharge periods. If the gap between the electrodes appears to have changed from its normal value of 0.025", the tube should be tested for breakdown by removing it from service and applying voltage across the electrodes through a suitable current-limiting resistor.

WIRING SCHEMATIC

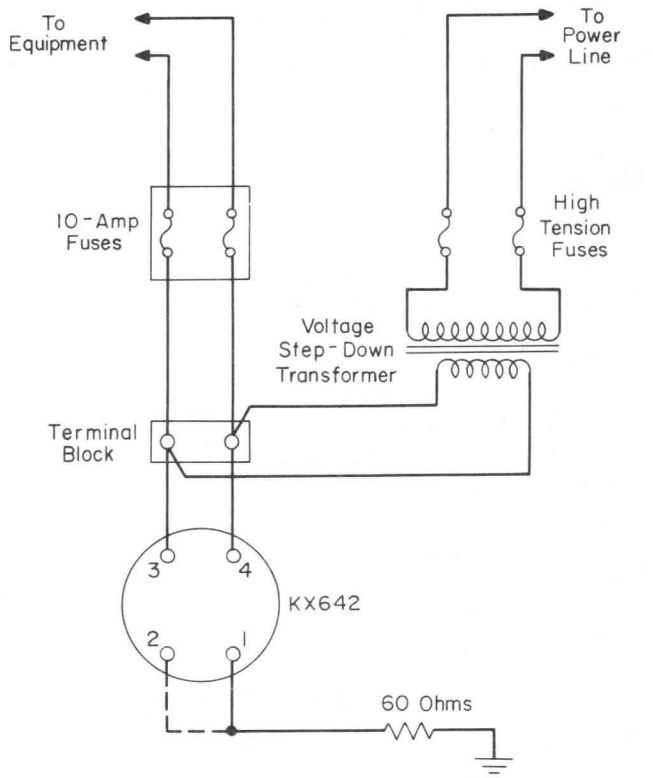

CE-A1159

NOTE

The information contained herein is furnished without assuming any obligations. The description and illustration of circuits herein does not convey to the purchaser of tubes any license for circuits under the patent claims of Westinghouse Electric Corporation or others.

The information contained herein is supplied without assuming responsibility for infringement of patents or other rights of third parties which may result from its use. No license is granted by implication or otherwise under any patent or patent rights of Westinghouse Electric Corporation.

COLD CATHODE TRIGGER TUBE TYPE 759

The 759 is a cold cathode relay tube with a pure metal cathode designed for operation from a DC anode supply. The trigger characteristic provides a high impedance input useful for control by photo electric cells, and detectors ionization chambers and other high impedance sources.

ELECTRICAL:

Cathode			Cold
Trigger-Cathode Capacitance			2 $\mu\mu$f
Typical Trigger-Cathode Current at 135 Volts dc (See Figure 1)		3×10^{-11}	Ampere
Positive Breakdown Voltage: (See Figure 2)	Min.	Max.	
Anode-Cathode (Note 1)	250	325	Volts
Trigger-Cathode (Note 1)	150	180	Volts
Operating Anode Voltage	220	280	Volts
Required Trigger Transfer Current (Fig. 1)	--	10^{-9}	Ampere

MECHANICAL:

Mounting Position	Any
Cooling	Unrestricted, Air Convection
Bulb	T-9
Base	JEDEC A4-26
Cap	JEDEC C1-1
Bulb Coating	Ceresin Wax

MAXIMUM RATINGS:

Absolute Maximum Values

DC Anode Voltage	325	max.	Volts
DC Cathode Current:			
Peak	25	max.	Ma.
Average	4	max.	Ma.
DC Trigger Voltage	180	max.	Volts
DC Peak Trigger Current	0.5	max.	Ma.
Ambient Temperature	–20 to +60	max.	°C

1. No voltage on remaining electrode.

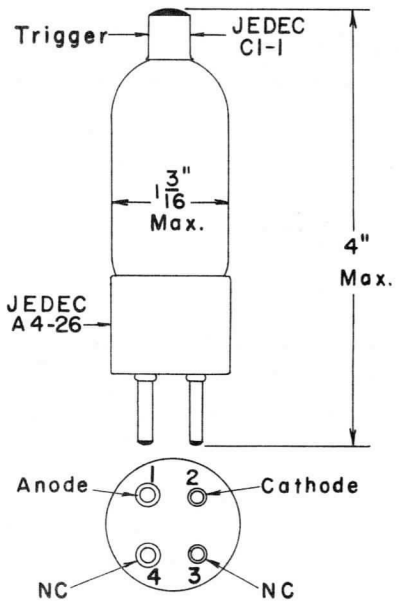

Westinghouse

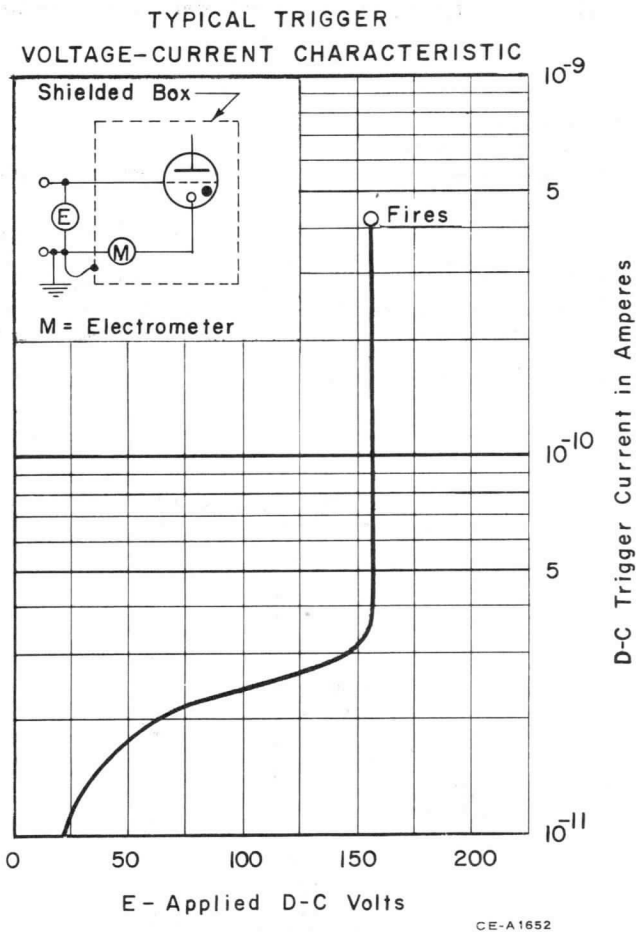

FIGURE 1

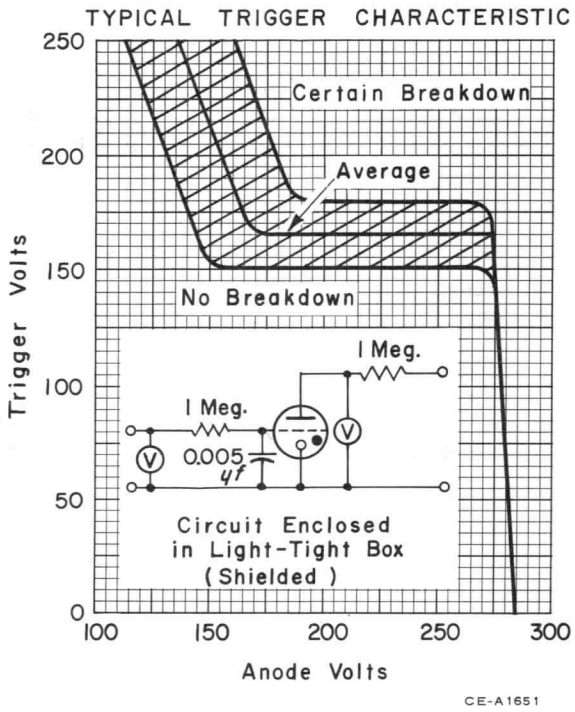

FIGURE 2

The information contained herein is supplied without assuming responsibility for infringement of patents or other rights of third parties which may result from its use. No license is granted by implication or otherwise under any patent or patent rights of Westinghouse Electric Corporation.

September 15, 1955

Gas Switching Window Tube WL-6260

The WL-6260 is a fixed-tuned gas switching window designed for use in high power pulsed systems operating at frequencies in the 1300 megacycle region. Used in pairs, spaced approximately a quarter-wave apart, it constitutes a broad-band pre-TR device.

GENERAL DATA

Electrical:

Peak Power	3 max.	Mw
Average Power	4	Kw
Pulse Duration	5 max.	μsec
Duty Cycle	.0015	
Ambient Temperature	+100 to −55	°C
Transmitter Peak Power Output (Min.)*	10	Kw

Mechanical:

Mounting Position	Any
Outline Dimensions	See Page 2
Mounting Flange	
Female	UG-417/U or UG-368/U
Male	UG-369/U
Wave Guide	RG-69/U

*4 μsecond pulse. Minimum power for tube breakdown.

VOLTAGE STANDING WAVE RATIO VS. FREQUENCY FOR A SINGLE WINDOW AND FOR A COMBINATION OF TWO WINDOWS RESONANT AT 1286 MC/SEC.

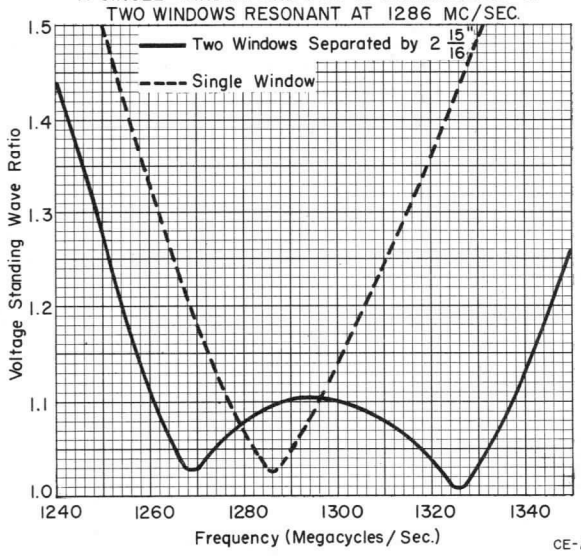

Electrical Data, Single Window:

	Max.	Typical	Min.	
Resonant Frequency	1290	—	1280	Mcs
Low Level Input V.S.W.R.		See Graph		
Loaded Q	3.5	—	—	
Insertion Loss at Resonance	0.25	—	—	db
Leakage Power, Average Over Pulse at 2 Mw, 4 μsec, 150 pps	17	13	—	Kw
Recovery Time at 2 Mw, 3 db down	—	20	—	μsec
Arc Loss at 2 Mw	0.08	—	—	db

Electrical Data, Two Windows, Separation 2-15/16" between Centerlines:

	Max.	Typical	Min.	
Operational Band	1350	—	1250	Mcs
Low Level Input V.S.W.R. Over Operational Band	1.4	See Graph		
Insertion Loss	0.5	—	—	db
Leakage Power, Average Over Pulse at 2 Mw, 4 μsec	0.7	—	—	Kw
Recovery Time at 2 Mw, 3 db down	—	20	—	μsec
Arc Loss at 2 Mw	0.08	—	—	db

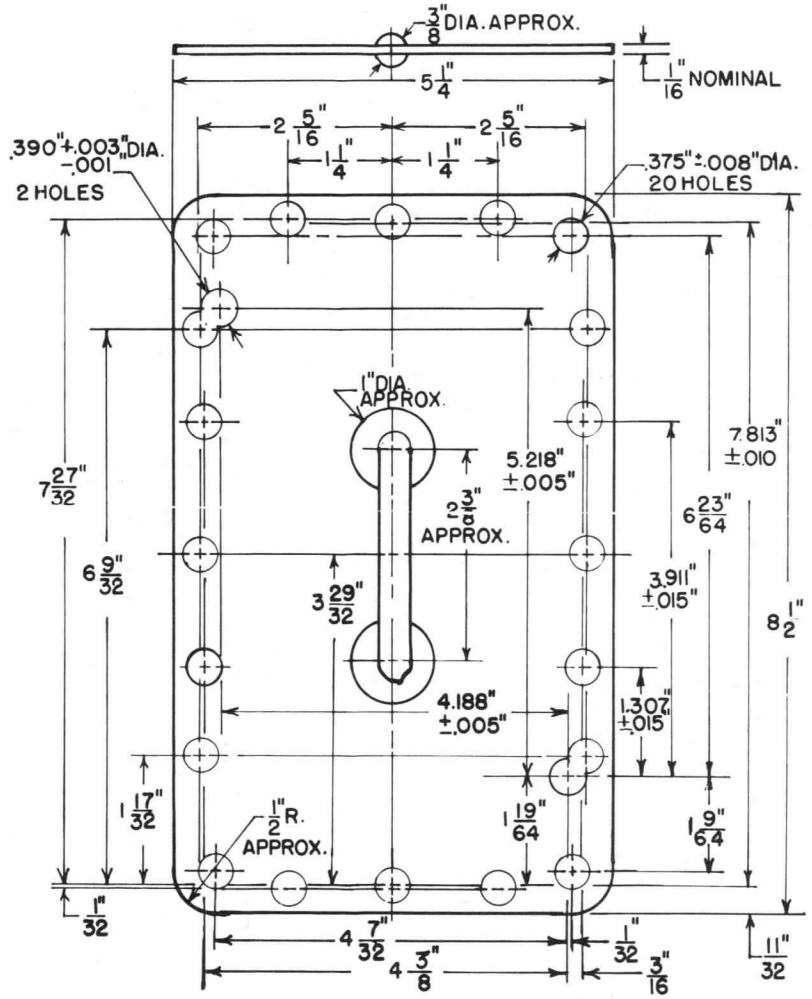
3/8" DIA. APPROX.
1/16" NOMINAL
5 1/4"
2 5/16"
2 5/16"
1 1/4"
1 1/4"
.390" +.003" -.001" DIA.
2 HOLES
.375" ±.008" DIA.
20 HOLES
1" DIA. APPROX.
7 27/32"
6 9/32"
3 29/32"
2 3/8" APPROX.
5.218" ±.005"
7.813" ±.010
6 23/64"
3.911" ±.015"
8 1/2"
4.188" ±.005"
1.307" ±.015"
1 17/32"
1/2" R. APPROX.
1 19/64"
1 9/64"
1/32"
4 7/32"
4 3/8"
1/32"
3/16"
11/32"

CE-A1011